AFTER THE INITIAL 250 HOURS (ONLY FOR NEW MACHINES)

REPLACING THE HYDRAULIC OIL RETURN FILTER

⚠ WARNING

- Stop the motor and allow each part of the machine to cool down before performing inspection and maintenance.
  - The motor, the hydraulic system and other parts of the machine are hot immediately after the motor is stopped. Touching these parts will cause burns.
  - The hydraulic oil is also hot and under high pressure.
    Be careful not to touch the hydraulic oil when loosening the cap or plug. Working on the machine under these conditions could result in burns or injuries due to the hot oil spurting out.
- Oil may spurt out if caps or filters are removed or pipes are disconnected before releasing the pressure in the hydraulic system.
  - Gradually loosen the vent plug to relieve tank pressure.
  - When removing plugs or screws, or when disconnecting hoses, stand to the side and loosen them slowly to gradually release the internal pressure before removing.

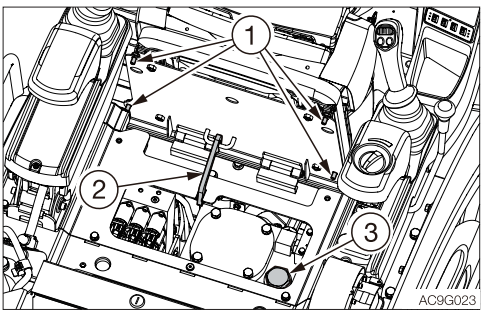

1. Raise the safety lock lever to the locked position.
2. Remove the bolts (1).
3. Slide the seat backward.
4. Tilt the seat forward.
5. Secure the maintenance cover with the stopper (2).
6. Slowly loosen the vent plug (3) to relieve the internal pressure, and then remove the plug.

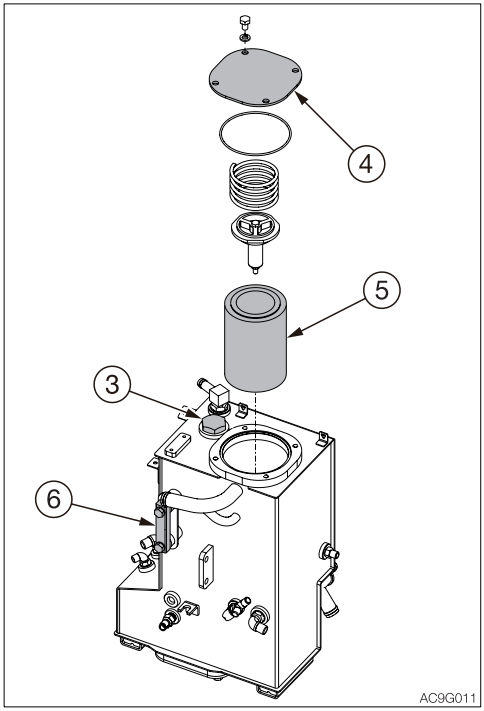

7. Loosen the bolts to take out the flange (4).
8. Remove the return filter (5).
9. Install a new return filter.
10. Reinstall the flange (4) on its original position.
11. Inspect the level with the sight gauge (6), and replenish if the level is too low.
    Refer to “Inspecting the hydraulic oil tank level and replenishing” on page 5-17.

REPLACING THE PILOT LINE FILTER

⚠ WARNING

- Stop the motor and allow each part of the machine to cool down before performing inspection and maintenance.
  - The motor, the hydraulic system and other parts of the machine are hot immediately after the motor is stopped. Touching these parts will cause burns.
  - The hydraulic oil is also hot and under high pressure immediately after the motor is stopped.
    Be careful when loosening the caps or plugs. Working on the machine under these conditions could result in burns or injuries due to the hot oil spurting out.
- Oil may spurt out if caps or filters are removed or pipes are disconnected before releasing the pressure in the hydraulic system.
  - Gradually loosen the vent plug to relieve tank pressure.
  - When removing plugs or screws, or when disconnecting hoses, stand to the side and loosen them slowly to gradually release the internal pressure before removing.

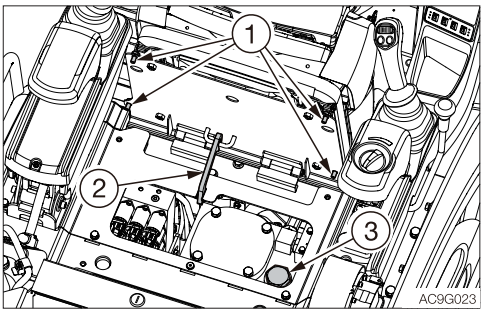

1. Raise the safety lock lever to the locked position.
2. Remove the bolts (1).
3. Slide the seat backward.
4. Tilt the seat forward.
5. Secure the maintenance cover with the stopper (2).
6. Slowly turn the vent plug (3) to relieve tank pressure, then remove.
7. Release the stopper (2) to return the seat to the original position.

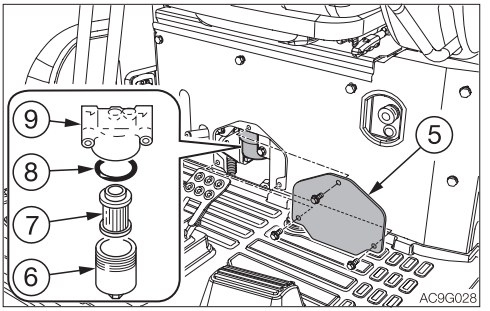

8. Remove the bolts to remove the cover (5).
9. Turn the case (6) counterclockwise and remove it.
10. Remove the element (7) and O-ring (8).
11. Clean the inside of the case (6).
12. Apply a thin layer of oil on the O-ring of the new filter.
13. Install the new element on the filter stand (9).
14. Apply a thin layer of oil on the new O-ring (8).
15. Install the new O-ring (8) and the case (6) on the filter stand (9).
    · Case (6) tightening torque: 25 to 35 N·m (18.4 to 25.8 ft-lb)
16. Inspect the level with the sight gauge (1) and replenish if the level is too low.
    Refer to “Inspecting the hydraulic oil tank level and replenishing” on page 5-17.

REPLACING THE TRAVEL MOTOR GEAR OIL

⚠ WARNING

- Stop the motor and allow each part of the machine to cool down before performing inspection and maintenance.
  - The travel motor is hot immediately after the motor is stopped. Touching it will cause burns.
  - The gear oil is also hot and under high pressure immediately after the motor is stopped.
    Be careful when loosening the plugs. Working on the machine under these conditions could result in burns or injuries.
- The pressure in the reduction gear case of travel motor may cause oil or the plug to fly out. Loosen the plug slowly to release the pressure.

IMPORTANT: If the percentage of the traveling time within the total operating time is high, replace the gear oil earlier than the specified time.

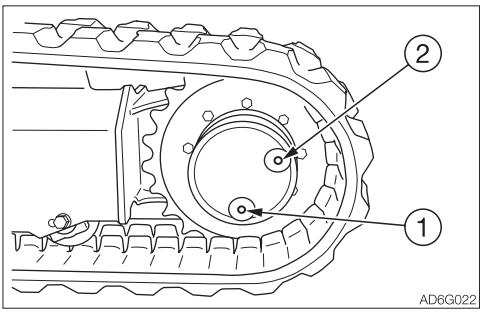

1. Set the travel motor so that plug (1) is at the very bottom.
2. Place a pan under the plug (1).
3. Remove plugs (1) and (2) and drain the oil.
4. Rewrap the plugs with new sealing tape.
5. Tighten the plug (1).
   - Plug (1) tightening torque: 46 to 51 N·m (34 to 37.6 ft-lb)
6. Add oil through the hole of the plug (2) until oil flows out of the hole of the plug (2).
7. Tighten the plug (2).
   - Plug (2) tightening torque: 46 to 51 N·m (34 to 37.6 ft-lb)

EVERY 250 HOURS

CLEANING THE DUST-FREE FILTERS FOR THE MOTORS

⚠ WARNING

Always wear appropriate equipment such as protective goggles and dust mask when working with compressed air, as metal fragments or other objects can fly and cause serious injury.

Clean the filters immediately after operating in dusty places.
If they are clogged, the motor could overheat.

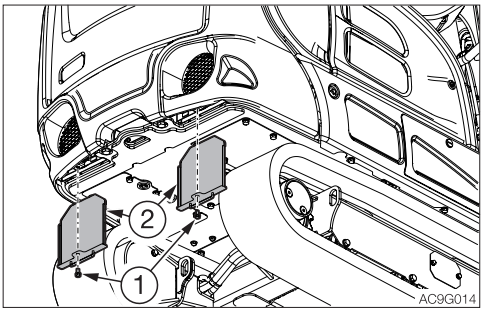

1. Remove the bolts (1).
2. Remove the dust-free filters (2).
3. Clean the dust-free filters (2).

CLEANING THE OIL COOLER FINS

⚠ WARNING

Wear required appropriate equipment such as protective goggle and filter mask when using compressed air, as metal fragments or other objects can fly and cause serious injury.

IMPORTANT:
- Be careful not to damage the fins when cleaning.
- When using compressed air, make sure the pressure is no higher than 200 kPa (28 psi/2.0 kgf·m) and hold the nozzle sufficiently away from the fins.
- Never use water when cleaning.
- When operating the machine in very dusty places, perform inspection and maintenance operations every day.

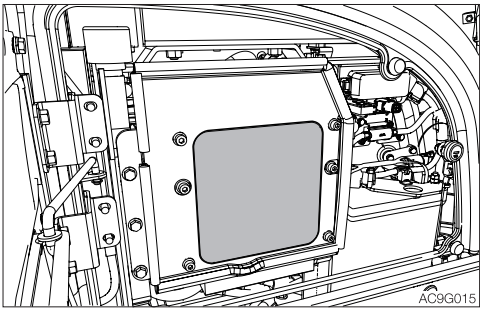

Blow compressed air on the fins to remove mud and dirt stuck on them.

CLEANING THE AIR FILTERS

⚠ WARNING

- **When replacing the air filter, turn the key switch to the OFF position and turn the battery switch OFF to avoid electric shock.**
- **Wear required appropriate equipment such as protective goggle and filter mask when using compressed air, as metal fragments or other objects can fly and cause serious injury.**

Clean the filters immediately after operating in dusty places.
If the filters are clogged, the air flow is reduced and a booming sound is heard from the air conditioner unit.

Removing the filters

1. Turn the starter key to the OFF position to stop the motor.
2. Open the side cover and turn the lead-acid battery switch to the OFF position.

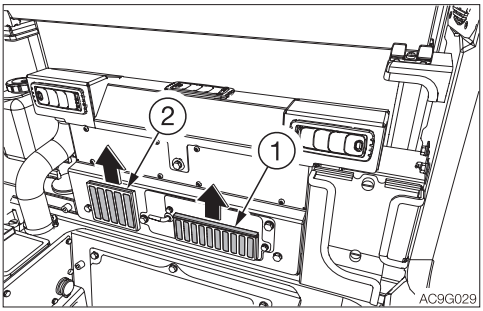

3. Remove the circulation filters (1) and (2).
   Circulation filter (1):
   Parts No. 03345-00133
   Circulation filter (2):
   Parts No. 03345-00153

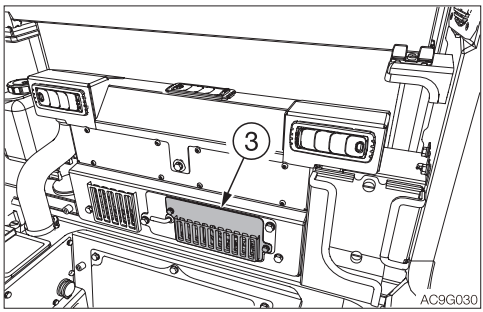

4. Remove the cover (3).

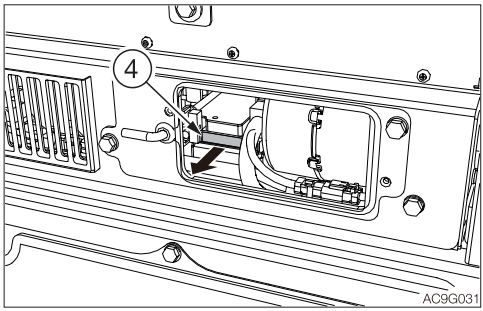

5. Remove the ventilation filter (4).
   Ventilation filter (4):
   Parts No. 03345-00134
6. Use compressed air or water to clean each filter, depending on how dirty it is.

Cleaning

1. Blow dry, compressed air (138 kPa or 20 psi or less) directly on the filters from the inside, moving up and down along the pleats.
   Be sure to keep the nozzle at an adequate distance from the filters.
2. Wash the filter with neutral detergent if it is very dirty. Dry the filter completely after washing it.

Replacing

Replace the filter with a new one once a year or if it is still clogged after blow-drying with compressed air and washing.

EVERY 1000 HOURS

REPLACING THE HYDRAULIC OIL RETURN FILTER

Refer to “Replacing the hydraulic oil return filter” on page 5-25.

REPLACING THE TRAVEL MOTOR GEAR OIL

Refer to “Replacing the travel motor gear oil” on page 5-28.

REPLACING THE AIR BREATHER

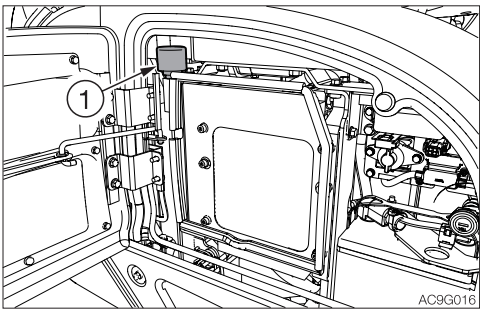

1. Open the side cover.
2. Slowly turn the air breather (1) counterclockwise by hand or with the wrench to release the internal pressure from the hydraulic oil tank. When the hissing sound stops, remove the air breather (1).
3. Apply a thin layer of oil on the packing of the new air breather.
4. Install the new air breather by hand.
   · Tightening torque: Max. 5 N·m (3.7 ft-lb)

REPLACING THE PILOT LINE FILTER

Refer to “Replacing the pilot line filter” on page 5-26.

EVERY 2000 HOURS

INSPECTING THE ACCUMULATOR

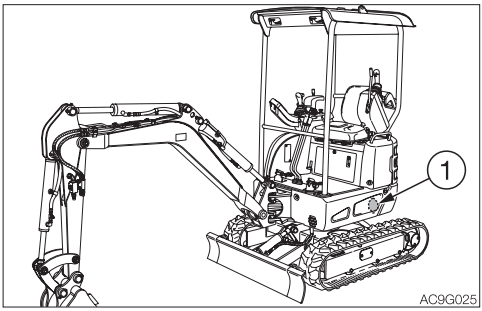

⚠ WARNING

- **High-pressure nitrogen gas is enclosed in the accumulator (1). If handled incorrectly, it could explode and cause serious injury. Strictly observe the following precautions:**
  - **Do not disassemble.**
  - **Do not allow flame nearby or throw it into a fire.**
  - **Do not drill, weld or fuse.**
  - **Do not subject it to physical shock such as hitting, rolling or dropping.**
  - **Before disposing of the unit, the sealed gas must be drained. Contact a Takeuchi sales or service dealer for help.**
- **Clear all personnel from the work area.**
- **Sound the horn to warn people around the machine.**

IMPORTANT: If the accumulator (1) fails, the boom cannot be lowered or the residual pressure in the hydraulic circuit cannot be released while the motor is stopped.

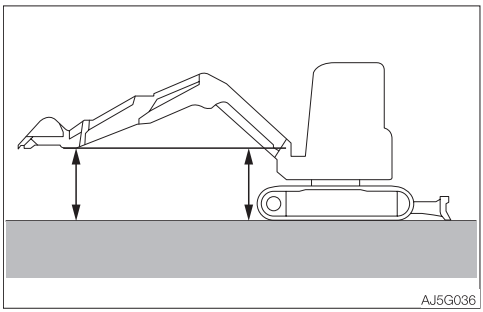

1. Start the motor, then fully retract the arm and bucket cylinders.
2. Operate the boom so that the tip of the arm is positioned at the bottom of the boom.

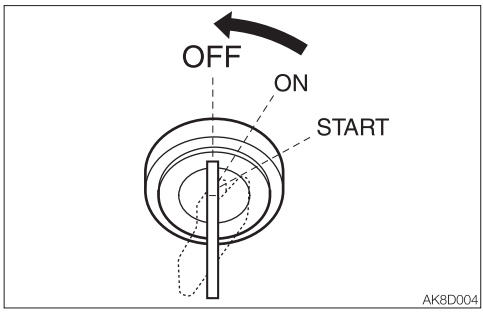

3. Turn the starter key to the OFF position to stop the motor.

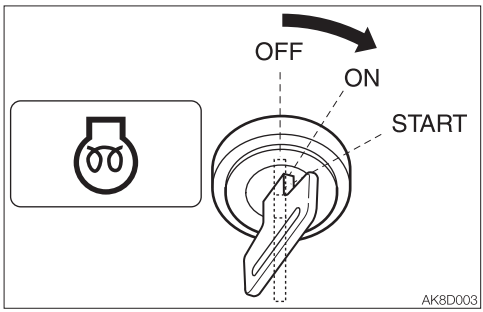

4. Lower the safety lock lever to the unlock position, and then turn the key to the ON position. (Do not start the motor.)

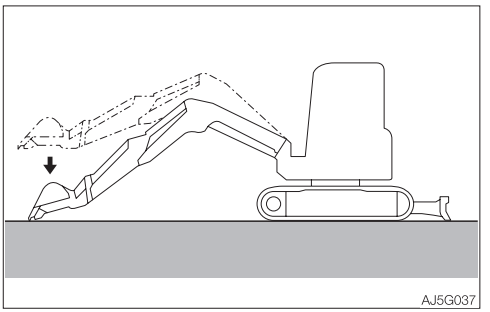

5. Lower the boom until the bucket contacts the ground.
   The machine is normal if the bucket is lowered to the ground. The accumulator (1) is probably faulty if the boom cannot be lowered or stops halfway. Consult a Takeuchi sales or service dealer for help.

Note: When the boom is lowered to lower the bucket to the ground, do it within 10 minutes of stopping the motor.

EVERY 4000 HOURS

REPLACING THE HYDRAULIC OIL AND CLEANING THE SUCTION STRAINER

⚠ WARNING

- Stop the motor and allow each part of the machine to cool down before performing inspection and maintenance.
  - The motor, the hydraulic system and other parts of the machine are hot immediately after the motor is stopped. Touching these parts will cause burns.
  - The hydraulic oil is also hot and under high pressure immediately after the motor is stopped.
    Be careful when loosening the caps or plugs. Working on the machine under these conditions could result in burns or injuries due to the hot oil spurting out.
- Oil may spurt out if caps or filters are removed or pipes are disconnected before releasing the pressure in the hydraulic system.
  - Gradually loosen the vent plug to relieve tank pressure.
  - When removing plugs or screws, or when disconnecting hoses, stand to the side and loosen them slowly to gradually release the internal pressure before removing.

1. Set the machine to the hydraulic oil level inspection posture.
   Refer to “Inspecting the hydraulic oil tank level and replenishing” on page 5-17.
2. Raise the safety lock lever to the locked position.

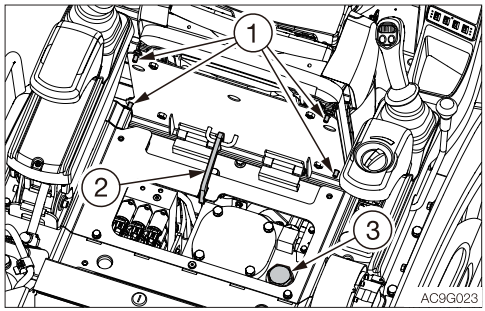

3. Remove the bolts (1).
4. Slide the seat backward.
5. Tilt the seat forward.
6. Secure the maintenance cover with the stopper (2).
7. Slowly loosen the vent plug (3) to relieve the internal pressure, and then remove the plug.

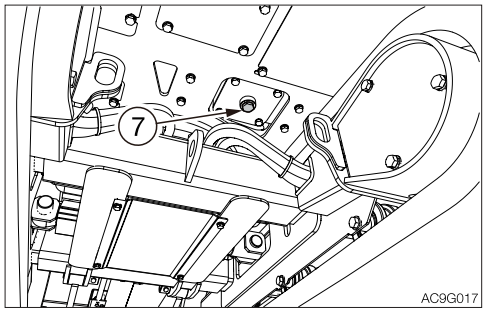

8. Place a pan for catching the waste oil under the drain plug (7).
9. Loosen the drain plug (7) and drain the hydraulic oil.

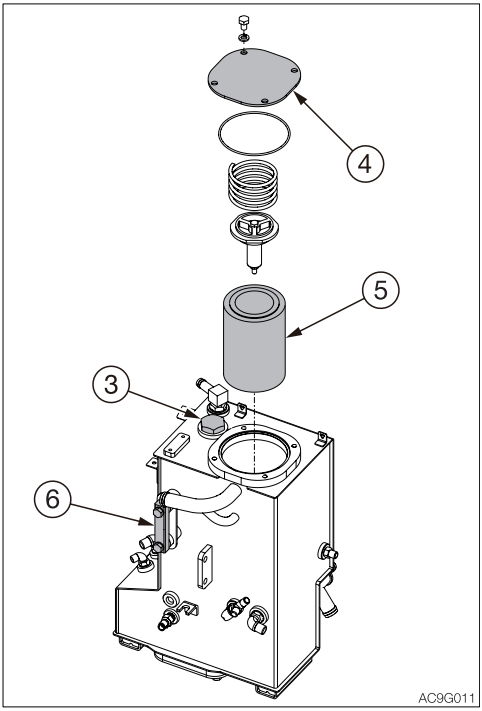

10. Loosen the bolts to take out the flange (4).
11. Remove the return filter (5).

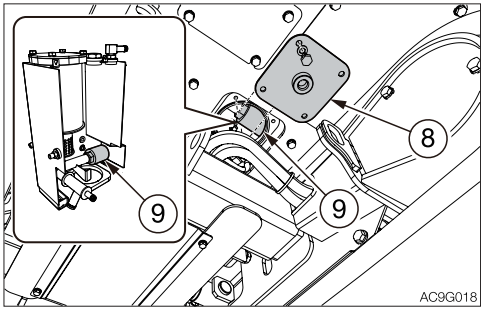

12. Loosen the bolts and remove the flange (8).
13. Remove the suction strainer (9) and clean it.
14. Clean the inside of the hydraulic oil tank.
15. Replace the air breather.
    Refer to “Replacing the air breather” on page 5-32.
16. Install the suction strainer (9).
17. Install a new return filter to the flange (4).
18. Reinstall the flange (4) to their original positions.
19. Tighten the drain plug (7).
20. Add hydraulic oil from the hole of plug (3) up to the level between the upper limit (H) and the lower limit (L) in the sight gauge (6).
21. Tighten the plug (3).
22. Bleed air from the hydraulic oil circuit following “Bleeding air” below.
23. Set the machine to the hydraulic oil level inspection posture and inspect the oil level when the oil temperature drops.
    Refer to “Inspecting the hydraulic oil tank level and replenishing” on page 5-17.

Bleeding air

IMPORTANT: After replacing the hydraulic oil or hydraulic devices, or after performing maintenance of the hydraulic devices, bleed air from the hydraulic circuits and hydraulic devices. Failure to do so may damage the hydraulic devices.

• Cylinders

1. Start the motor, let it run at a low-idling speed for 10 minutes.
2. Maintain the motor at low idle, then extend and retract each cylinder 4 or 5 times, without let them reach the stroke end.
3. Run the motor at high speed, then extend and retract each cylinder 4 or 5 times, without let them reach the stroke end.
4. Set the motor back to low idle, then extend and retract all the cylinders 4 or 5 times to the stroke ends.

• **Emergency shut-off valve (If equipped)**

This operation is dangerous and requires experience. Ask your sales or service dealer for help.

If air is not released, the working equipment could become slow in reacting to the operation of the operator and show unexpected behavior.

⚠ WARNING

When removing plugs or screws, or when disconnecting hoses, stand to the side and loosen them slowly to gradually release the internal pressure before removing.

1. Place a pan under the hose (A) or (B) to catch the waste oil.
2. Start the motor and let it run at low-idle
3. Fully lower the safety lock lever to the unlock position.

Boom

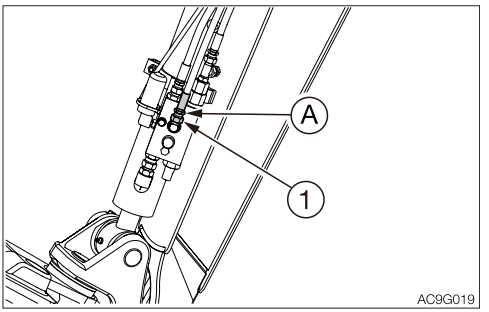

4. Hold the hose fitting (A) in place with a wrench and slowly loosen the hose nut (1).
5. Slowly move the boom in the “Boom lower” direction a little until there are no more air bubbles coming from the hose nut (1) joint.
6. Hold the hose fitting (A) in place with a wrench and tighten the hose nut (1).

Arm

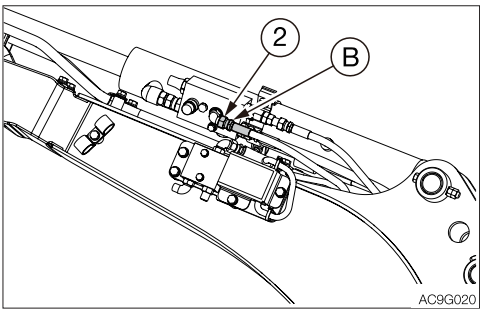

4. Hold the hose fitting (B) in place with a wrench and slowly loosen the hose nut (2).
5. Slowly move the arm in the “Arm lower” direction a little until there are no more air bubbles coming from the hose nut (2) joint.
6. Hold the hose fitting (B) in place with a wrench and tighten the hose nut (2).

WHEN REQUIRED

REPLACING THE BUCKET TEETH AND THE SIDE CUTTERS

Replace the bucket teeth and the side cutters when the tooth points or the side cutters are worn. Do not wait until the adapter or bucket is damaged.

⚠ WARNING

- **Before performing maintenance or repairs under the machine, lower all moveable working equipment to the ground or in the lowermost position.**
- **To prevent unexpected movement, firmly secure the working equipment when repairing or replacing the bucket teeth or side cutter.**
- **When using a hammer, pins may fly out or metal particles may be scattered. This may lead to serious injury.**
  - **If hard metal parts such as pins, bucket teeth, side cutter or bearings are hit with a hammer, wear protective gear such as safety goggles and gloves.**
  - **When hitting pins or bucket teeth, always check that there is no one in the surrounding area.**
- **Do not allow unauthorized personnel in the work area while working.**

• Bucket tooth <V13SY or V17S>
Removal

1. Clean the bucket and park the machine in a flat, safe place where the ground is hard.

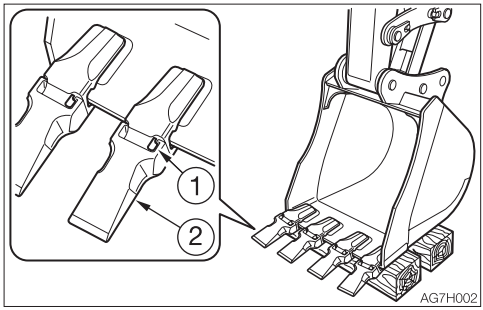

2. Set the bottom surface of the bucket flat and lower it on a block so that the locking pin (1) can be knocked out.
3. Remove the key, then check that the bucket is stable.

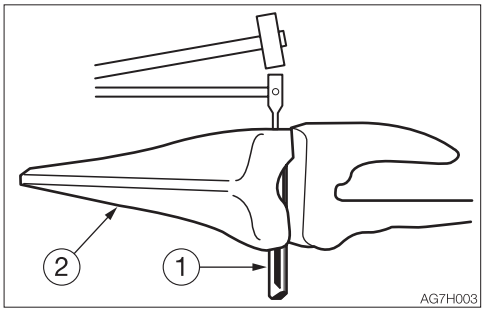

4. Place a rod against the locking pin (1) and knock the locking pin out by hammering against the rod.
   The rod should be round and thinner than the locking pin.

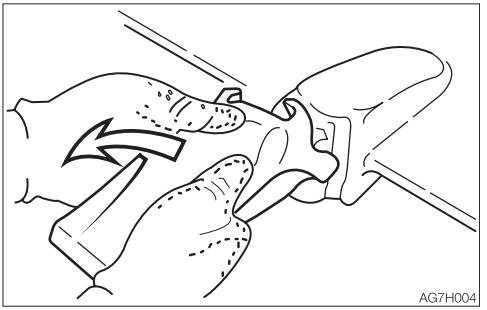

5. Remove the tooth point (2). Some tooth points (2) are of the type that are removed by turning (twisting) them counterclockwise.
   The same procedure can be used to remove the other tooth points.

Installation

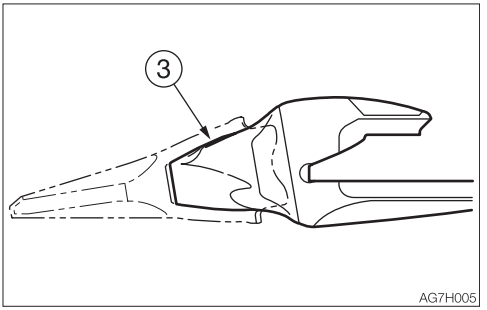

1. Clean the adapter nose (3). If there is gravel or mud on the adapter nose, the tooth point will not go in all the way and the pin cannot be driven in.

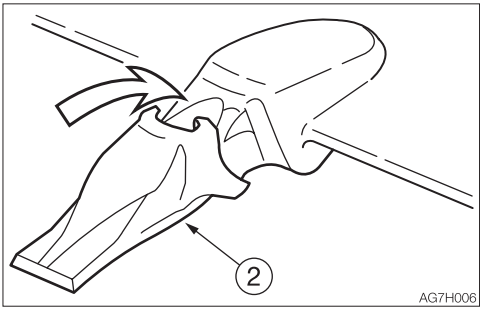

2. Put the tooth point (2) in the adapter nose (3).
   Push in firmly until the tooth point (2) touches the tip of the adapter nose(3).
   Some tooth points (2) are of the type that are installed by turning (twisting) them clockwise.

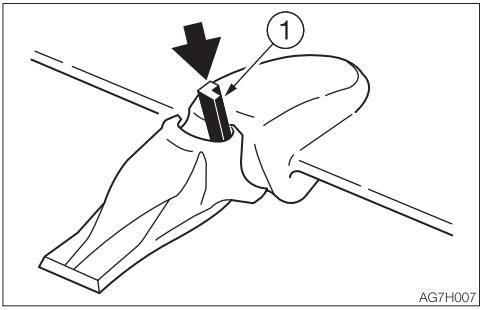

3. Insert the locking pin (1), making sure it is in the right direction.

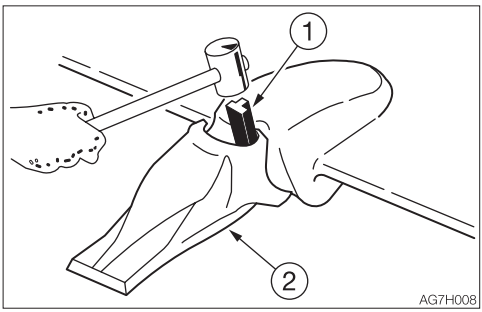

4. Drive in the locking pin (1) with a hammer until it is flush with the tip of the tooth point (2) ear.

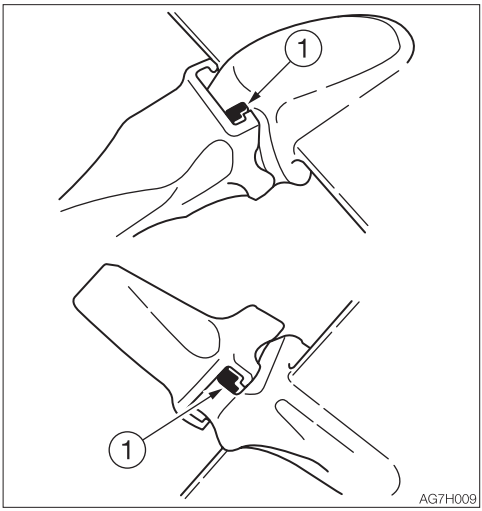

5. The locking pin (1) is now driven in.
   The same procedure can be used to install the other tooth points.

• Side cutter
Installation

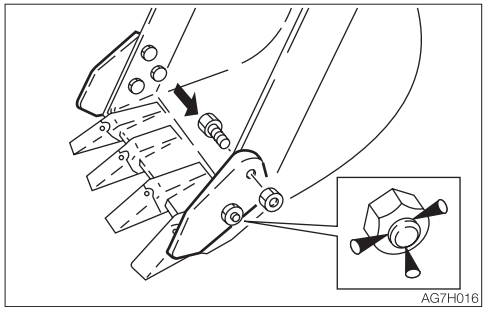

1. Insert the bolts from the inner of the bucket and tighten the side cutterwith nuts.
   Tightening torque: 241 N·m (178 ft-lb)
2. Caulk the bolts with a punch at three spots along the periphery of the screw to prevent the nuts from coming loose.

REPLACING THE BUCKET

⚠ WARNING

- **Before performing maintenance or repairs under the machine, lower all working equipment to the ground or in the lowermost position.**
- **If maintenance must be performed with the motor running, always work as a two person team communicating each other.**
  - **One person must sit in the operator's seat so that he/she can immediately stop the motor when necessary. He/she must take care not to touch the lever or pedal unless necessary.**
  - **The one who performs maintenance must make sure to keep his/her body or clothing away from the moving part of the machine.**
- **When using a hammer, pins may fly out or metal particles may be scattered. This may lead to serious injury.**
  - **If hard metal parts such as pins, bucket teeth, side cutter or bearings are hit with a hammer, wear protective gear such as safety goggles and gloves.**
  - **When hitting pins or bucket teeth, always check that there is no one in the surrounding area.**
- **When aligning the pin holes, always do so by checking them visually. Do not insert your finger in the pin hole, or you could lose your finger.**

Removing

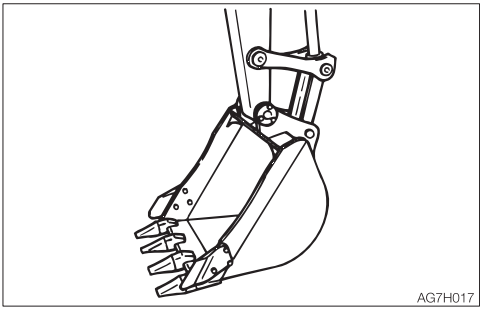

1. Lower the bucket to the ground as shown on the figure above in a stable position.

Note: When removing pins, set the bucket so that it is barely touching the ground. If the bucket is firmly touching the ground, the resistance will be great and it will be difficult to remove the pin.

2. Set the safety lock lever to the locked position and stop the motor.

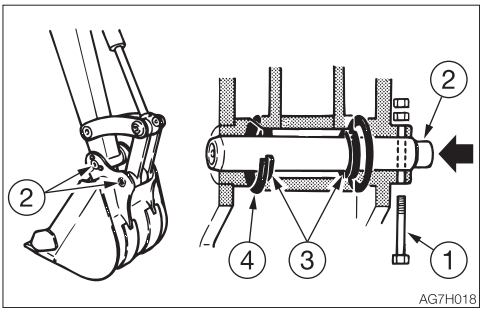

3. Remove the bolt (1).
4. Hammer the pin (2) out of the bucket.
5. Remove the bucket.
   Inspect the pin seal (3) and replace it if it is deformed or damaged. (See next page.)

Installation

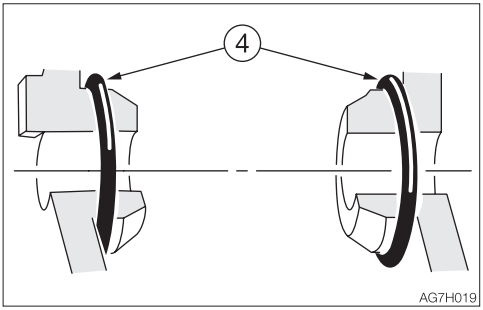

1. Set the O-ring (4) on the bucket as shown on the figure above.

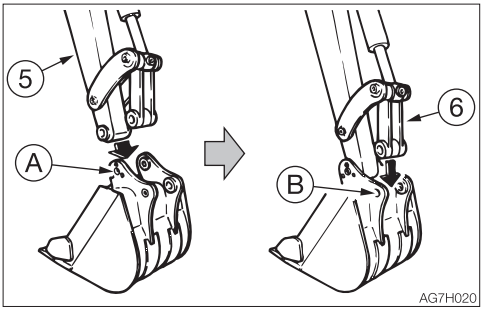

2. Align the pin hole (A) on the bucket with the pin hole on the arm (5), and install the pin (2).
3. Operate the cylinder, align the pin hole (B) on the bucket with the pin hole on the link arm (6), and install the pin (2).

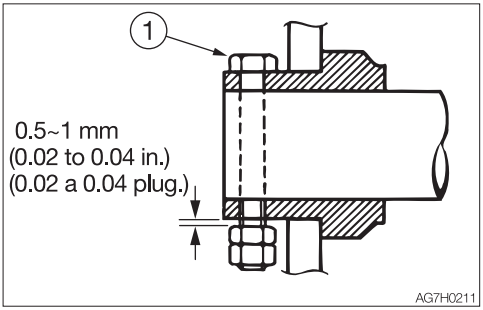

4. Align the turn prevention holes, and then install the bolt (1) and the nut. Be sure to leave a gap of about 0.5 to 1 mm (0.02 to 0.04 in.) between the nut and bucket bush, or the nut will come loose.

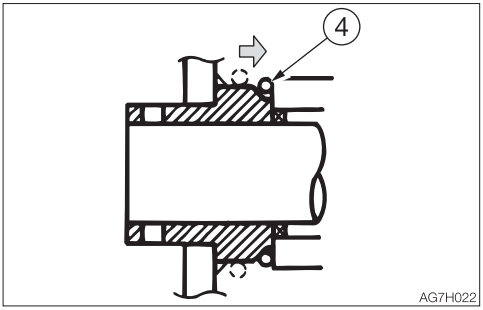

5. Adjust the gap between the bucket and the arm.
   Refer to “Adjusting the gap between the bucket and arm (If equipped)” on page 5-45.
6. Slide the O-ring (4).

Replacing the pin seal

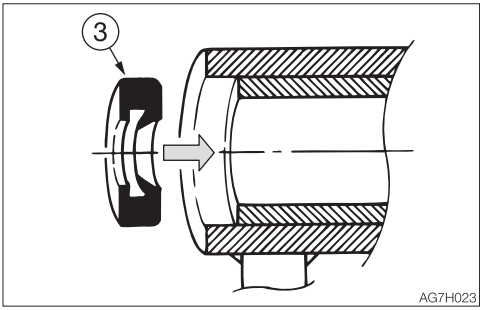

1. Set the pin seal (3) in the direction shown on the figure above.
2. Use a mallet to slowly press the pin seal in. Be careful not to damage the seal.

ADJUSTING THE GAP BETWEEN THE BUCKET AND ARM (IF EQUIPPED)

⚠ WARNING

- **Before performing maintenance or repairs under the machine, lower all working equipment to the ground or in the lowermost position.**
- **To prevent unexpected movement, securely block the working equipment when adjusting the gap.**

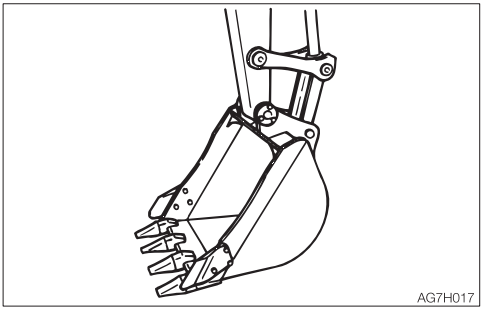

1. Lower the bucket to the ground as shown on the figure above in a stable position.
2. Check that the bucket dose not move, and then set the safety lock lever to the locked position and stop the motor.

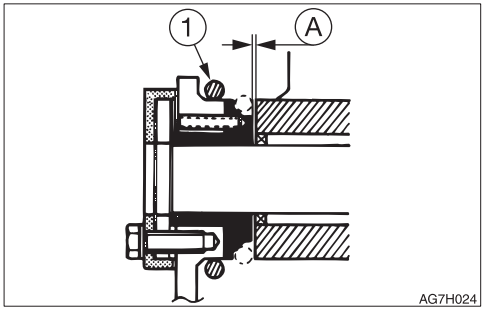

3. Move the O-ring (1) to bring the gap (A) into view and measure the width of the gap (A).
   The gap (A) should be 0.5 mm (0.02 in.).
   Swing the upperstructure slightly to the left and lightly press the arm point to the left side of the bucket (the side without an adjuster).

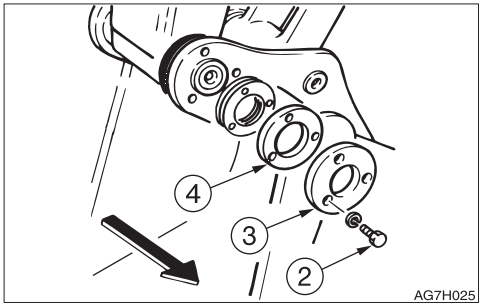

4. Remove the three bolts (2), the end plate (3) and flange (4).

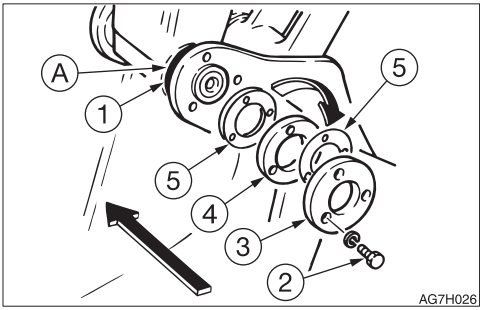

5. Pull out the adjustment shim(s) (5) corresponding to the gap (A) from between the flange (4) and the bucket body.
   Adjustment shim thickness : 0.5 mm (0.02 in.)
   Be careful that the gap is no less than 0.5 mm (0.02 in.) after adjustment.

Note:
Example (for a gap of 2 mm or 0.08 in.):
2 mm - 0.5 mm (standard value)= 1.5 mm (0.06 in.)
In the above example, three shims (5) should be removed.

6. Insert the adjustment shim(s) (5) removed in step 5 above between the end plate (3) and the flange (4), and then fasten it in place with the three bolts (2).
   · Tightening torque for bolts (2): 83 N·m (61.5 ft-lb.)
7. Return the O-ring (1) to the original position.

LUBRICATING THE LEVERS AND PEDALS

⚠ WARNING

Set the machine to the parking posture, stop the motor, remove the starter key and store it. Failure to do so may result in the machine moving abruptly, leading to serious injury or death.

If the levers or pedals no longer move smoothly, grease them.

Operating levers

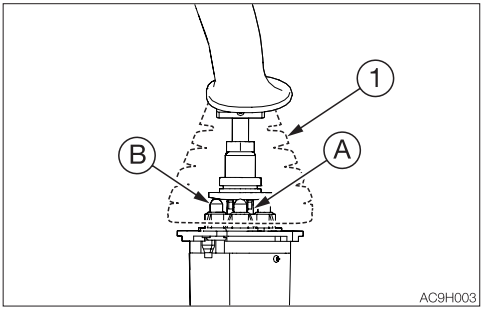

Travel levers/pedals

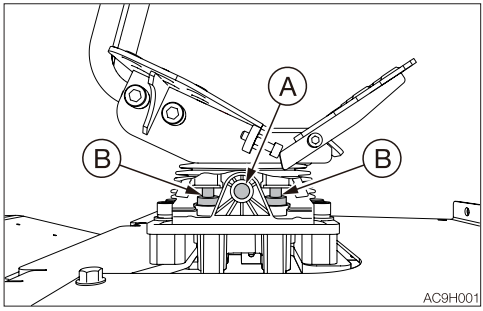

1. Remove the lower mount section of the boot (1) and turn it upward.
2. Wipe off the old grease.
3. Apply grease to points (A) and (B).
4. Set the boot (1) back as it was.

Boom swing pedal

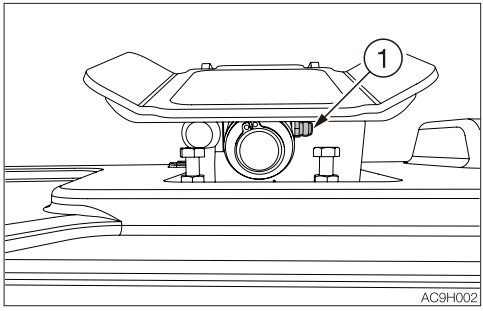

1. Use the grease gun to lubricate the pedal through the grease fitting (1).
2. Wipe off the excess grease.

INSPECTING THE RUBBER CRAWLERS

Repair or replace the rubber crawlers if their condition becomes as described below. Consult your sales or service dealer for repair or replacement.

Rubber crawler
Replace the crawler if the entire crawler is stretched and cannot be adjusted.

(1) Lug

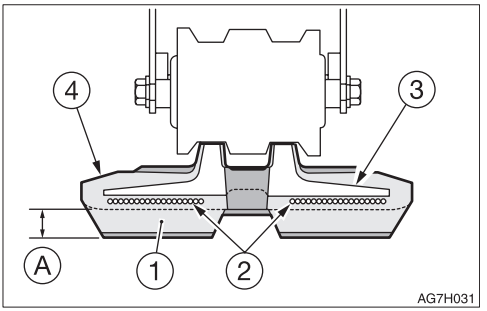

Replace if the height of (A) is 5 mm (0.2 in.) or below.

(2) Steel cord

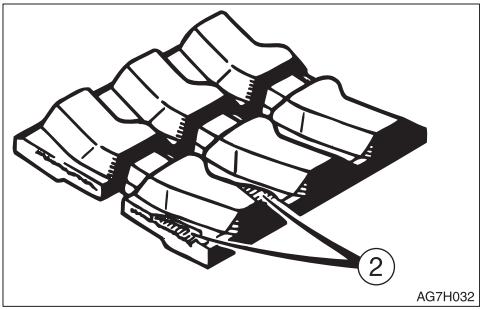

Replace if the steel cord is exposed for two links or more.
Replace if the half or more of the steel cords on one side are cut.

(3) Metal core

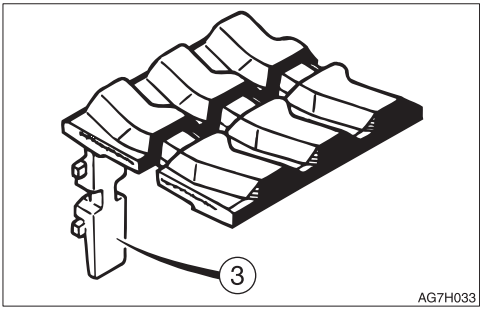

Replace if even one metal core is off.

(4) Rubber

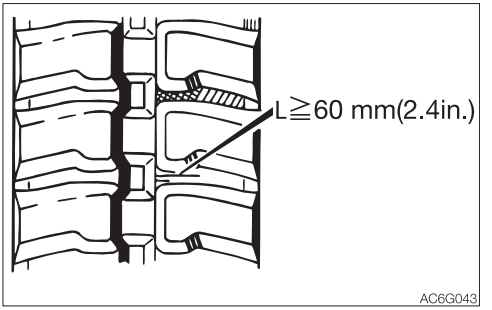

Repair if there are cracks of 60 mm (2.4 in.) or greater in length.
If the steel cord is visible, repair as soon as possible, regardless of the length of the crack.

REPLACING THE RUBBER CRAWLERS

⚠ WARNING

- **If you must work beneath the raised machine or working equipment, always use wood blocks, jack-stands or other rigid and stable supports. Never get under the machine or working equipment if they are not sufficiently supported.**
- **If maintenance must be performed with the motor running, always work as a two person team communicating each other.**
  - **One person must sit in the operator's seat so that he/she can immediately stop the motor when necessary. He/she must take care not to touch the lever or pedal unless necessary.**
  - **The one who performs maintenance must make sure to keep his/her body or clothing away from the moving part of the machine.**

Removal

1. Fully release the tension of the rubber crawler.
   Refer to "Inspecting and adjusting the crawler tension" on page 5-20.

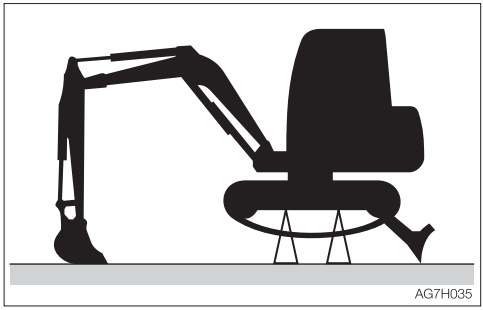

2. Use the working equipment to lift the body.

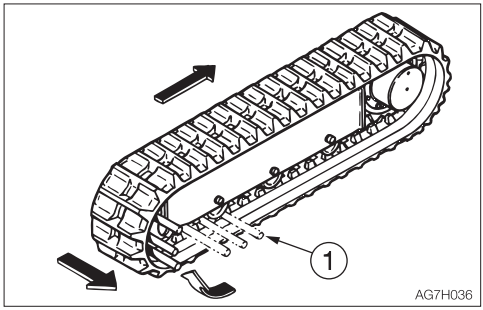

3. Set an iron pipe (1) in the rubber crawler and turn the sprocket slowly in the reverse direction.
4. Turn until the iron pipe (1) is directly next to the idler and the rubber crawler lifts away from the idler, then stop turning the sprocket.
5. Slide the rubber crawler sideways and remove it from the crawler frame.
   Remove the other rubber crawler using the same procedure.

Installation

1. Use the working equipment to lift the body.

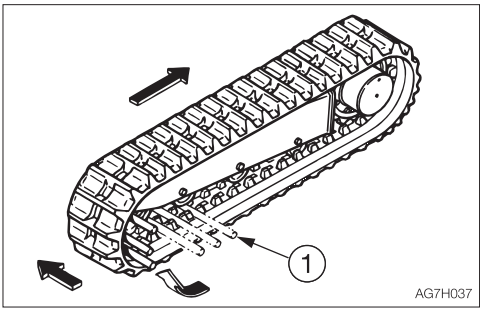

2. Set the rubber crawler on the sprocket.
3. Set an iron pipe (1) in the rubber crawler and turn the sprocket slowly in the reverse direction.
4. Turn until the iron pipe (1) is directly next to the idler and the rubber crawler lifts away from the idler, then stop turning the sprocket.
5. Slide the rubber crawler inward, engage it on the idler, then pull out the iron pipe.
6. Check that the rubber crawler is securely engaged on the sprocket and idler.
7. Tighten the rubber crawler to the standard tension.
   Refer to “Inspecting and adjusting the crawler tension” on page 5-20.
8. Install the other rubber crawler using the same procedure.

INSPECTING AND REPLENISHING THE WINDSHIELD WASHER FLUID

⚠ WARNING

Choose ethyl alcohol as washer solution. Do not use methyl alcohol as washer solution. It could damage the eyes.

Use a windshield washer fluid designed specifically for motor vehicles. Follow the instructions included with the washer fluid.

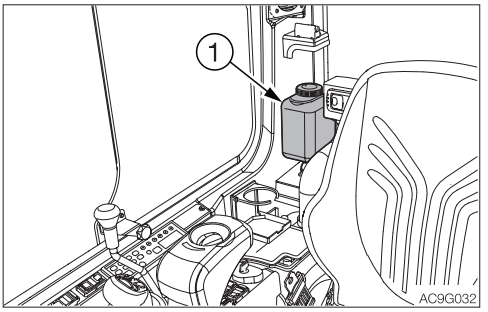

Inspection

1. Open the cab door.
2. Inspect the washer tank (1) and add washer fluid if the level is low.

Replenishing

1. Mix the washer fluid to the prescribed concentration.
2. Remove the cap (2) and add washer fluid. Keep the dust away while replenishing the washer fluid.
3. Install the cap (2).

MAINTENANCE DURING EXTENDED STORAGE PERIOD

Storage procedures

If the machine is to be stored for 30 days or more, store it indoors. If it must be stored outdoors, park the machine on a surface laid with lumber on a flat ground, and place a waterproof cover over it so that it stays dry.
When the machine is not going to be used for a long time, store the lithium ion battery at an ambient temperature of –10 to 30°C, with a state of charge (amount of remaining power) of around 10%.
Inspect the state of charge of the lithium ion battery once a month. If it is 0%, recharge it to 10%.

Note: If the battery is stored at ambient temperature of 45°C (113°F) and over 30% state of charge, it will degrade by 2 to 5% per month.
Note: If stored for 84 days or longer, the warning lamp for uncorrected lithium ion capacity flashes, but this does not indicate a malfunction. After long-term storage, this warning lamp goes out when the battery is charged from 20% or less to full charge.

1. Clean the machine.
2. Inspect for oil leakage, cracks and loose nuts and bolts.
3. Confirm that the lithium ion battery level is around 10%.
4. Use the grease gun to lubricate the grease fittings.
5. Fully retract the bucket and arm cylinders and lower the bucket and dozer blade to the ground.
6. Apply rust-inhibiting oil to the hydraulic cylinder rods.
7. Disconnect the negative cable from the lead-acid battery and cover the battery to prevent freezing.

Note: When a machine is stored for a long time, the settings of the multi-information display may be reset. In this case, set the multi-information display again.

During storage

⚠ WARNING

- **Do not operate the machine in an enclosed area without adequate ventilation.**
- **If natural ventilation is not possible, install ventilators, fans, exhaust extension pipes or other venting devices.**

1. To prevent rusting, operate the machine once a month so that the oil can be circulated throughout the system.
2. Inspect the lead-acid battery and recharge it if necessary.
   Ask a Takeuchi sales or service dealer for recharging.

Starting the machine after storage

IMPORTANT: If the above “Storage procedures” have not been followed during the extended storage periods, consult your sales or service dealer before starting the machine again.

1. Wipe off the rust-inhibiting oil that was applied on the piston rods of the hydraulic oil cylinders.
2. Add oil or grease as necessary.

Note: If the battery capacity has not been corrected for a long time (84 days or more), the warning lamp for uncorrected lithium ion capacity flashes and the battery pack error code 105 is generated. Charge the battery as follows.

- Set the state of charge to 20% or less.
- Complete charging. (Charge until a green or white bar appears on the charging screen.)

TROUBLESHOOTING



SYMPTOMS THAT ARE NOT MALFUNCTIONS

The symptoms listed below are not malfunctions.

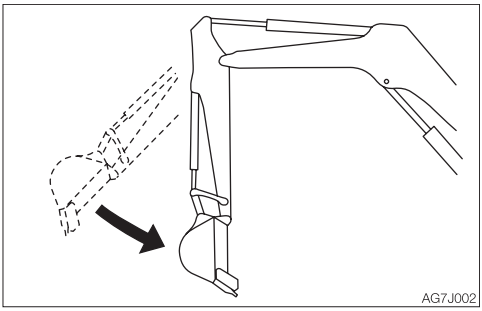

- The arm retracting speed momentarily decreases when the arm reaches an almost vertical position while the motor is running at low speed.

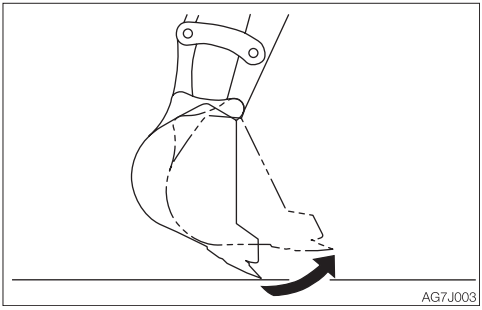

- The bucket moving speed momentarily decreases when the bucket teeth reach an almost horizontal position while the motor is running at low speed.
- The slew motor produces noise at the beginning and end of the slewing.
- The travel motor produces noise when stopped suddenly from its high speed traveling.
- The control valve produces noise if excessive force is applied to the working equipment or when it moved to the stroke end.
- It becomes less easy to operate the machine when an attachment weighing more than a standard arm or bucket is installed.
- The motor keeps running for several seconds after the key is turned to the OFF position.

IF THE MACHINE OVERHEATS

The symptoms listed below indicate overheating.

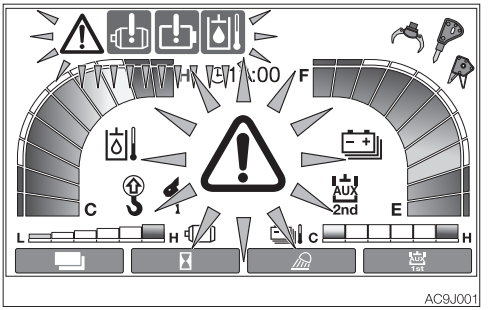

- An alarm is sounded and one or more lamps, such as the lithium ion battery warning lamp, hydraulic oil temperature warning lamp and drive system warning lamp, as well as the vehicle emergency lamp, start flashing.
- The LED on the thermometer of the lithium ion battery is in the red zone.

Remedy procedure

1. Park the machine in a safe place.
2. Turn the key to the OFF position.
3. Check the display at every 10 minutes until there is no warning.
4. If no warning is displayed, perform the inspections and countermeasures listed below.
   - Dust-free filters for the motors ..... Clean
     Refer to page 5-29.

If the problem persists after the above remedies, contact your sales or service dealer for repair.

IF THE LEAD-ACID BATTERY GOES DEAD

The symptom below indicates that the lead-acid battery is dead.
- The machine does not respond when the key is turned ON.

Remedy procedure

Start the machine using the battery on the booster vehicle via the booster cables.

⚠ WARNING

- **When starting the motor using booster cables, be sure to connect the cables according to the proper procedure. Improper use of booster cables could cause the lead-acid battery to explode or the machine to move unexpectedly.**
  - **Do not allow the booster vehicle and the machine with a dead battery (dead machine) to touch each other.**
  - **Do not allow the positive (+) and the negative (–) clips of the jumper cables to touch each other.**
  - **When connecting, attach the jumper cable to the positive (+) terminals first. When disconnecting, remove the cable from the negative (–) terminal (ground) first.**
  - **Connect the last clip of the jumper cable to a point as far away from the battery as possible.**
- **Always wear the protective goggles when starting the motor with the booster cables.**

IMPORTANT: Use the booster cables and clips of a size suited to the capacity of the lead-acid battery. Do not use damaged or corroded booster cables and clips.
IMPORTANT: Be sure that the lead-acid battery of the booster vehicle has the same capacity as the dead lead-acid battery.
IMPORTANT: Be sure to connect the clips securely.

Connecting the jumper cables

IMPORTANT: Set the starter keys of the booster vehicle and the dead machine to the OFF position.

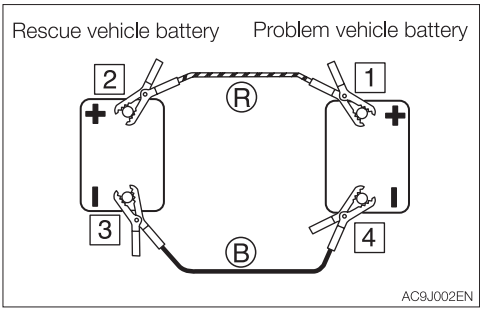

1. Connect the clip of booster cable (R) to the positive (+) battery terminal of the dead machine.
2. Connect the other clip of booster cable (R) to the positive (+) battery terminal of the booster vehicle.
3. Connect the clip of booster cable (B) to the negative (–) battery terminal of the booster vehicle.
4. Connect the other clip of booster cable (B) to the negative (–) battery terminal of the dead machine.

Starting the machine

1. Check that the clips are securely connected to the terminals.
2. Turn the key switch to ON to start the machine.

Disconnecting the jumper cables

Once the dead machine is successfully running, remove the jumper cables by following the same steps as for connection in the reverse order.

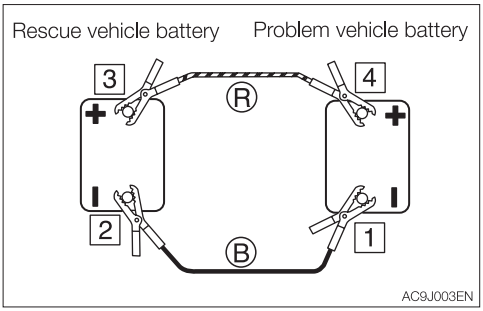

1. Disconnect the clip of booster cable (B) from the negative (–) battery terminal of the dead machine.
2. Disconnect the other clip of booster cable (B) from the negative (–) battery terminal of the booster vehicle.
3. Disconnect the clip of booster cable (R) from the positive (+) battery terminal of the booster vehicle.
4. Disconnect the clip of booster cable (R) from the positive (+) battery terminal of the dead machine.

Recharging

Ask your sales or service dealer to recharge the dead lead-acid battery. Be sure to remove the dead battery from the machine before recharging; failure to do so could result in machine failure.

MEMO

IF A FUSE BLOWS

If a light does not come on or the electrical system does not work, a fuse may be blown. Inspect the fuses.

INSPECTING AND REPLACING THE FUSE

⚠ WARNING

If the fuse blows again soon after replacement, then the electric system is likely faulty. It may pose a fire hazard if not properly repaired. Contact your sales or service dealer for advice.

1. Turn the starter key to the OFF position to stop the motor.
2. Open the side cover and turn the lead-acid battery switch to the OFF position.

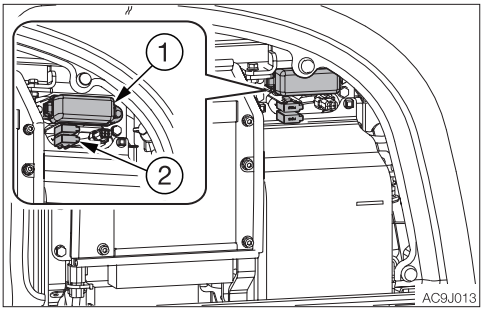

3. Open the fuse box covers (1) and (2).
4. Check for any blown fuses.

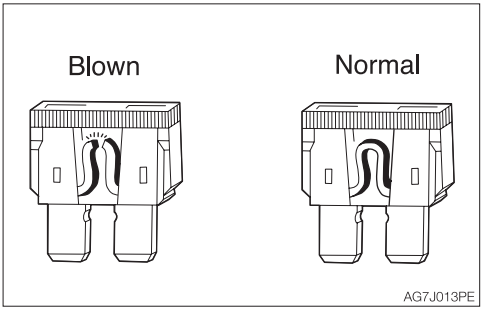

5. If a fuse is blown, replace it with a spare fuse of the same capacity.

Fuse layout and circuits protected (1)

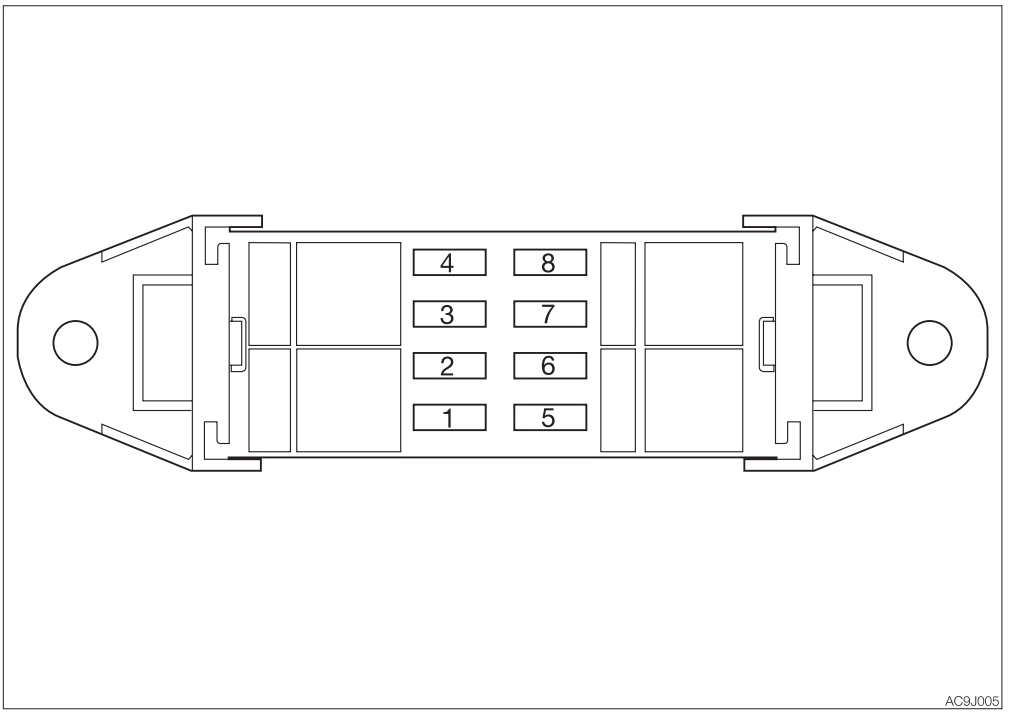

Fuse layout and circuits protected (2)

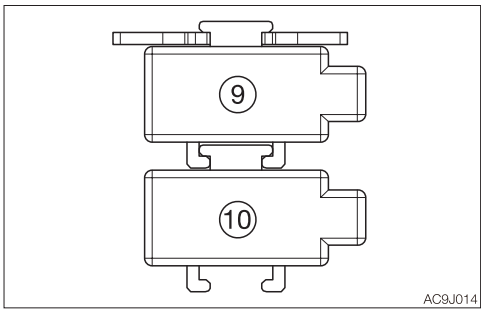

IF A FUSE BLOWS

No.	Capacity	Symbol	Protected circuit	Fuse No.
1	10A	MAIN CTL	Main controller power supply	F1
2	5A		Maintenance socket	F2
3	15A		Lights	F3
4	25A	SUB CTL	Sub-controller power supply	F4
5	5A	OPT	Option	F5
6	5A		Key switch (24V)	F6
7	10A		Horn	F7
8	3A		GPS	F8
9	3A		GPS	F9
10*	10A		Fan	F16

*: Machines with a cab

<Procedures for machines with a cab>

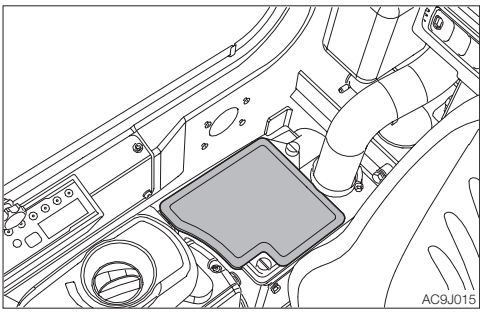

6. Remove the cover.

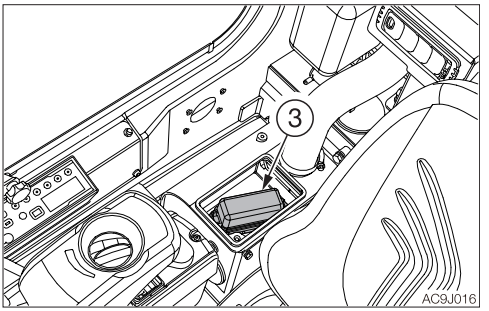

7. Open the fuse box cover (3).
8. Check for any blown fuses.

Fuse layout and circuits protected (3)

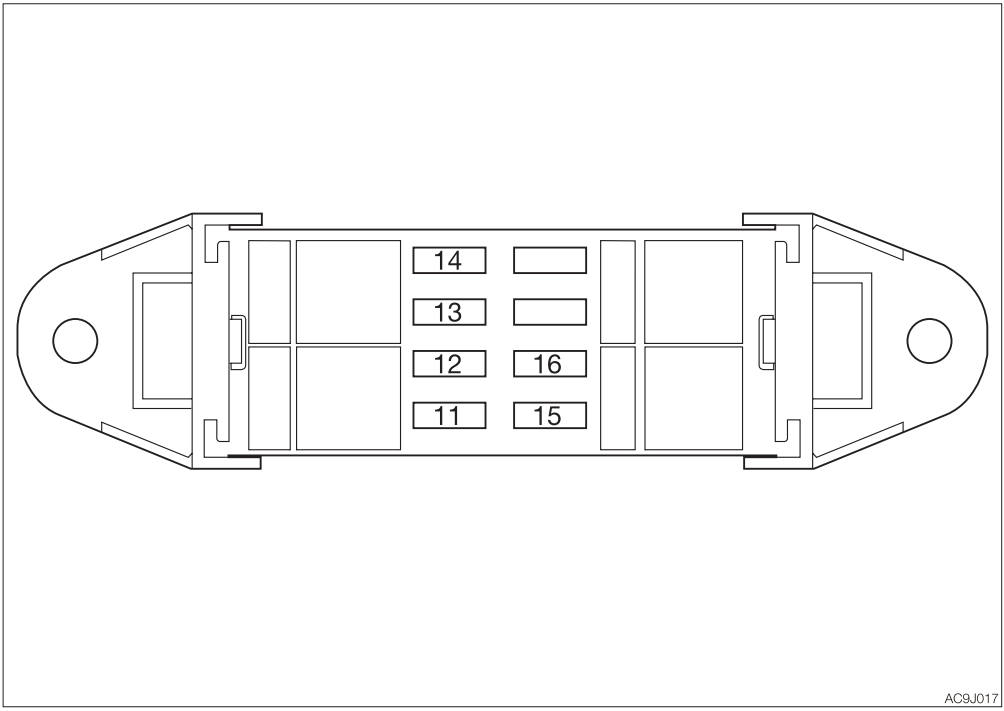

No.	Capacity	Symbol	Protected circuit	Fuse No.
11	15A		Heater	F10
12	5A		Radio	F11
13	5A		Power sockets	F12
14	5A		Lights	F13
15	10A		Front wiper	F14
16	10A		Rear wiper	F15

INSPECTING THE SLOW-BLOW FUSE

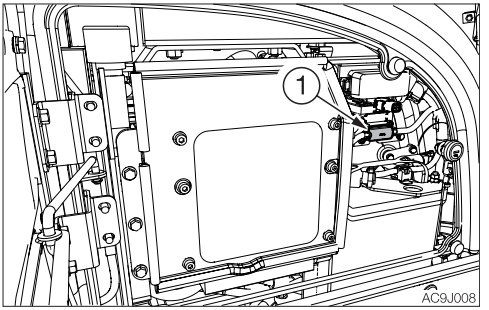

If the machine is not turned on after turning the key switch to the ON position when the lead-acid battery switch is ON, the slow-blow fuse (1) is likely blown. Open the maintenance cover and inspect the fuse. If the fuse is blown, please contact your sales or service dealer.

Note: Slow-blow fuses are large fuses used in high current applications. Working like a regular fuse, they protect the electric components and wirings from damage caused by excessive current.

MEMO

IF A WARNING LAMP FLASHES

If an alarm is sounded or a warning lamp starts flashing during operation, park the machine in a safe place and perform the remedy procedures described below.

Warning lamp	Lamp name	Causes and remedies
 AW4J007	**Vehicle emergency lamp**	There is a problem in the machine. Refer to the respective warning lamp below. Get the error code number from the multi-information display, and then consult your sales or service dealer referring to the “Vehicle error code list”, “Battery pack error code list” or “Motor error code list”. Refer to “Multi-information display” on page 2-14. Refer to “Vehicle error code list” on pages 6-16 to 6-20. Refer to “Battery pack error code list” on pages 6-22 to 6-25. Refer to “Motor error code list” on pages 6-26 to 6-31.
 AC9J009	**Drive system warning lamp**	There is a problem with the motor for gear pump, motor for piston pump or the related equipment. Consult a Takeuchi sales or service dealer for help.
 AC9J010	**Lithium ion battery warning lamp**	There is a problem with the battery pack or its related equipment. Consult a Takeuchi sales or service dealer for help.

Warning lamp	Lamp name	Causes and remedies
 AU7J002	**Hydraulic oil temperature warning lamp (red)**	The hydraulic oil temperature became too high due to machine overworking. Stop operation and let the hydraulic oil cool down.
	Hydraulic oil temperature warning lamp (blue)	The hydraulic oil temperature became too low due to ambient temperature conditions. Perform a warm-up operation. Refer to “Warm-up in cold climates” on page 3-9.
 AQ0J004	**Third auxiliary hydraulic warning lamp**	Pressure in the third auxiliary hydraulic line is too low Consult a Takeuchi sales or service dealer for help.
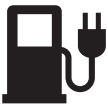 AC9J011	**Lithium ion battery level warning lamp**	The lithium ion battery level is low. Charge the battery. Refer to “Inspecting the lithium ion battery level” on page 5-16.
 AC9B047	**Warning lamp for uncorrected lithium ion capacity (battery pack error code 105)**	Flashes if the battery capacity has not been corrected for a long time (84 days or more). Charge the battery as follows. • Set the state of charge to 20% or less. • Complete charging. (Charge until a green or white bar appears on the charging screen.) If the lamp is flashing during the extended storage period, it is not a malfunction.

VEHICLE ERROR CODE LIST

If an error code appears on the display, consult your sales or service dealer.

Error code	Error details
9	Impossible to sense ACC key
402	CAN 0 communication error
412	CAN 1 communication error
422	CAN 2 communication error
512	CAN communication error (INV1)
522	CAN communication error (INV2)
532	CAN communication error (BMU)
602	CAN communication error (cluster gauge)
612	CAN communication error (IOX)
852	CAN communication error (lever L)
862	CAN communication error (lever R)
872	CAN communication error (travel pedal)
1703	Main power supply voltage error (too high)
1704	Main power supply voltage error (too low)
1713	IOX power supply voltage error (too high)
1714	IOX power supply voltage error (too low)
2503	Sensor voltage 1 error (too high) MMC
2504	Sensor voltage 1 error (too low) MMC
2553	Sensor voltage 2 error (too high) MMC
2554	Sensor voltage 2 error (too low) MMC
3401	Inverter precharge error
3506	Main motor current error (too high)

Error code	Error details
3820	Hydraulic oil temperature too hot
3823	Hydraulic oil temperature sensor error (too high)
3824	Hydraulic oil temperature sensor error (too low)
3833	Ambient temperature sensor error (too high)
3834	Ambient temperature sensor error (too low)
3843	Motor ambient temperature sensor error (too high)
3844	Motor ambient temperature sensor error (too low)
3853	LiB ambient temperature sensor error (too high)
3854	LiB ambient temperature sensor error (too low)
4407	Contactor fused
5303	Accelerator sensor error (too high)
5304	Accelerator sensor error (too low)
5603	Lift alarm sensor error (too high)
5604	Lift alarm sensor error (too low)
5667	Travel pedal system error
5669	Travel pedal L neutral error
5679	Travel pedal R neutral error
5683	Swing pedal voltage value error (too high)
5684	Swing pedal voltage value error (too low)
5689	Swing pedal neutral error
5693	Blade voltage value error (too high)
5694	Blade voltage value error (too low)
5699	Blade neutral error

Error code	Error details
5707	Joy stick L system error
5709	Joy stick L neutral error
5717	Joy stick R system error
5719	Joy stick R neutral error
5893	Pressure sensor PPS voltage value error (too high)
5894	Pressure sensor PPS voltage value error (too low)
5903	Pressure sensor PLS voltage value error (too high)
5904	Pressure sensor PLS voltage value error (too low)
6503	AUX1 slide switch voltage value error (too high)
6504	AUX1 slide switch voltage value error (too low)
6509	AUX1 slide switch neutral error
6519	AUX1 (L) switch error
6529	AUX1 (R) switch error
6603	AUX2 slide switch voltage value error (too high)
6604	AUX2 slide switch voltage value error (too low)
6609	AUX2 slide switch neutral error
6709	AUX3 switch error (Grip)
6719	AUX3 switch error (Grip) (Foot)
8015	AUX1 (L) PWM output current error (too low)
8016	AUX1 (L) PWM output current error (too high)
8025	AUX1 (R) PWM output current error (too low)
8026	AUX1 (R) PWM output current error (too high)
8035	AUX2 (L) PWM output current error (too low)
8036	AUX2 (L) PWM output current error (too high)
8045	AUX2 (R) PWM output current error (too low)
8046	AUX2 (R) PWM output current error (too high)

Error code	Error details
9005	Boom raise PWM output current error (too low)
9006	Boom raise PWM output current error (too high)
9015	Boom lower PWM output current error (too low)
9016	Boom lower PWM output current error (too high)
9025	Arm dump PWM output current error (too low)
9026	Arm dump PWM output current error (too high)
9035	Arm digging PWM output current error (too low)
9036	Arm digging PWM output current error (too high)
9045	Bucket dump PWM output current error (too low)
9046	Bucket dump PWM output current error (too high)
9055	Bucket digging PWM output current error (too low)
9056	Bucket digging PWM output current error (too high)
9065	Slew left PWM output current error (too low)
9066	Slew left PWM output current error (too high)
9075	Slew right PWM output current error (too low)
9076	Slew right PWM output current error (too high)
9085	Travel LF PWM output current error (too low)
9086	Travel LF PWM output current error (too high)
9095	Travel RF PWM output current error (too low)
9096	Travel RF PWM output current error (too high)

Error code	Error details
9105	Travel LB PWM output current error (too low)
9106	Travel LB PWM output current error (too high)
9115	Travel RB PWM output current error (too low)
9116	Travel RB PWM output current error (too high)
9125	Swing left PWM output current error (too low)
9126	Swing left PWM output current error (too high)
9135	Swing right PWM output current error (too low)
9136	Swing right PWM output current error (too high)
9145	Blade raise PWM output current error (too low)
9146	Blade raise PWM output current error (too high)
9155	Blade lower PWM output current error (too low)
9156	Blade lower PWM output current error (too high)
9900	Options settings change (TFM)

PWM = Pulse width modulation

MEMO

BATTERY PACK ERROR CODE LIST

If an error code appears on the display, consult your sales or service dealer.

Error code	Error details
18	Vehicle communication error
19	Error of vehicle drive preparation complete signal
20	Mode error 1
21	Mode error 2
22	Inverter stopping error
23	Clock synchronization timeout
33	Gross voltage overcharge
34	Gross voltage overcharge caution
35	Gross voltage too low
36	Caution on gross voltage too low
37	Module overcharge
38	Module overcharge caution
39	Module voltage too low
40	Caution on module voltage too low
41	Cell overcharge
42	Caution on cell overcharge
43	Cell voltage too low
44	Caution on cell voltage too low
45	Voltage difference in modules too large
46	Voltage difference in cells too large
49	Module temperature too high

Error code	Error details
50	Caution on module temperature too high
51	Module temperature too low
52	Caution on module temperature too low
53	Temperature sensor error
54	DC/DC converter Heatsink primary temperature error
55	DC/DC converter Caution on heatsink primary temperature
56	DC/DC converter Heatsink secondary temperature error
57	DC/DC converter Caution on heatsink secondary temperature
58	CMU printed circuit board temperature error
59	DC/DC converter 24 VDC voltage error
60	DC/DC converter 14.5 VDC voltage error
65	Parameter error (off-board charger)
66	Timeout in response to precharge command (off-board charger)
67	Precharge timeout (off-board charger)
68	Timeout in response to charge command (off-board charger)
69	Charger error (off-board charger)
70	Output current error (off-board charger)
71	Receive error (off-board charger)

Error code	Error details
73	Timeout in response to recharge command (off-board charger)
74	Timeout in response to stop charge command (off-board charger)
76	Error response to precharge command (off-board charger)
77	Error response to charge command (off-board charger)
78	Error response to stop charge command (off-board charger)
79	Error response to recharge command (off-board charger)
81	Parameter error (on-board charger)
82	Timeout in response to precharge command (on-board charger)
83*	Precharge timeout (on-board charger) Low temperature error
84	Timeout in response to charge command (on-board charger)
85	Charger error (on-board charger)
86	Output current error (on-board charger)
87	Receive error (on-board charger)
89	Timeout in response to recharge command (on-board charger)
90	Timeout in response to stop charge command (on-board charger)
92	Error response to precharge command (on-board charger)
93	Error response to charge command (on-board charger)
94	Error response to stop charge command (on-board charger)
95	Error response to recharge command (on-board charger)

*: Refer to page 0-24.

BATTERY PACK ERROR CODE LIST

Error code	Error details
97	Caution on reduced battery capacity
98	Battery capacity reduced
99	Contactor for charging error
100	Contactor for discharging error
101	Discharging overcurrent protection
102	Output overcurrent protection for off-board charger
103	Output overcurrent protection for on-board charger
104	Watchdog error
105	SOH not updated error
113	CMU circuit board communication error (CMU1 error)
114	CMU circuit board communication error (CMU2 error)
115	CMU circuit board communication error (CMU3 error)
116	CMU circuit board communication error (CMU4 error)
117	CMU circuit board communication error (CMU5 error)
118	CMU circuit board error (CMU1 error)
119	CMU circuit board error (CMU2 error)
120	CMU circuit board error (CMU3 error)
121	CMU circuit board error (CMU4 error)
122	CMU circuit board error (CMU5 error)
123	CMU circuit board MD error
130	Off-board charger stopped

MOTOR ERROR CODE LIST

If an error code appears on the display, consult your sales or service dealer.

Error code	Error details
0*	WAITING FOR NODE
0*	DATA ACQUISITION
0*	CHECK UP NEEDED
0*	PARAM RESTORE
0*	TILLER OPEN
2250	COIL SHOR. MC
2311	STBY I HIGH
2312	PUMP I=0 EVER
3100	WRONG SET BAT.
3101	WRONG KEY VOLT.
3110	VMN HIGH
3111	INIT VMN HIGH
3120	VMN LOW
3121	INIT VMN LOW
3130	CAPACITOR CHARGE
3211	DRIVER SHORTED
3221	CONTACTOR DRIVER
3222	EB. DRIV.SHRT.

*: The motor error code “0” may appear when the machine is started. This is not a problem because “0” will automatically disappear.

Error code	Error details
3223	POS. EB. SHORTED
3224	EB. DRIV.OPEN
3302	SMARTDRIVER KO
3610	EEPROM KO
3611	PARAM RESTORE
4110	MOTOR TEMPERAT.
4210	TH. PROTECTION
4211	THERMIC SENS. KO
4311	SENS MOT TEMP KO
5001	AUX BATT. SHORT.
5002	EVP COIL OPEN
5003	EVP DRIV. SHORT.
5101	VKEY OFF SHORTED
5114	LOGIC FAILURE #1
5441	CONTACTOR OPEN
5442	CONTACTOR CLOSED
6010	WATCHDOG
6302	CURRENT GAIN
8130	NO CAN MSG.
8131	NO CAN WR MSG.XX

Error code	Error details
FF01	WARNING SLAVE
FF11	LOGIC FAILURE #3
FF12	LOGIC FAILURE #2
FF1C	PUMP VMN LOW
FF1D	PUMP VMN HIGH
FF42	BATTERY LOW
FF4E	VACC NOT OK
FF4F	INCORRECT START
FF50	FORW + BACK
FF51	WRONG FBSENS.SET
FF56	PEDAL WIRE KO
FF8C	STO-SS1 ACTIVEXX
FF8D	STO-SS1 ALARM XX
FF8E	SAFETY INIT. XX
FF90	SAFETY SW. XX
FF91	SAFETY DIAG. XX
FF92	BMS FAULT
FF93	BMS NOT READY
FF94	WRONG PERFORM.
FF95	NO CAN MSG DISP

Error code	Error details
FF97	POT MISMATCH
FF98	SENSOR SUPPLY XX
FF99	OFFSET SPD.SENS.
FF9A	AGV
FF9B	WAIT MOTOR STILL
FFA1	RPM HIGH
FFA2	POS.EB.SHORT PIN
FFA3	ED SLIP MISMATCH
FFA4	POS.EB.SHORT GND
FFA8	SPEED FB.ERR. XX
FFA9	EMERGENCY
FFAB	ACQUIRING A.S.
FFAC	ACQUIRE ABORT
FFAD	ACQUIRE END
FFAF	SPEED OVERHEAD
FFB1	COIL SHOR. EB.
FFB2	MOTOR TEMP. STOP
FFB3	STEER SENSOR KO
FFB4*	OVERLOAD

*: If the working equipment is operated abruptly in a cold environment or when the machine is not sufficiently warmed up, or if it is operated while traveling, overload errors may occur due to excessive load on the electric motor.
If such an error occurs, the following error codes appear when the machine is restarted:
- Vehicle error code: 4407
- Battery pack error code: 100

To clear these errors, restart the machine. Then, sufficiently warm up the machine before starting operation.
If the error persists or occurs frequently, consult a Takeuchi sales or service dealer.

Error code	Error details
FFBB	LIFT+LOWER
FFBC	PUMP VACC NOT OK
FFBD	PUMP INC START
FFBE	PUMP VMN NOT OK
FFBF	PUMP I NO ZERO
FFC0	PUMP VACC RANGE
FFC3	STEER SENSOR KO
FFC4	MOT.PHASE SH.
FFC5	WRONG SLAVE VER.
	NO CAN MSG DISP
FFC6	M/S PAR CHK MISM
FFC7	PARAM TRANSFER
FFC8	VDC OFF SHORTED
FFC9	CURRENT PROFILE
FFCA	VDC LINK OVERV.
FFCB	HW FAULT MC
FFCC	BRAKE RUN OUT
FFCD	EPS RELAY OPEN
FFD2	WRONG RAM MEM.
FFD3	STALL ROTOR
FFD4	POWER MISMATCH
	W.SET. TG-EB XX
FFD5	POSITIVE LC OPEN
	INPUT MISMATCH
FFD8	EB. COIL OPEN

MOTOR ERROR CODE LIST

Error code	Error details
FFDB	PEV NOT OK
FFDD	HANDBRAKE
FFDE	SEAT MISMATCH
FFE2	VACC OUT RANGE
FFE3	HW FAULT
	OUT MISMATCH XX
FFE5	HW FAULT EB.
FFE6	LC COIL OPEN
	SOFTWARE ERROR
FFE8	CONT. DRV. EV
FFE9	POWERMOS SHORTED
FFEB	CTRAP THRESHOLD
FFEE	HW FAULT EV.
FFEF	CONTROLLER MISM.
FFF0	OUT MISMATCH PU
FFF1	COIL SHOR. EVAUX
FFF2	OPEN COIL EV.
	SP MISMATCH XX
FFF3	THROTTLE PROG.
	STO-SS1 ALARM XX
FFF4	SAFETY DIAG. XX
FFF5	IQ MISMATCHED
	SAFETY SW. XX
FFF7	SAFETY INIT. XX
FFF8	EVP DRIVER OPEN
FFF9	DRV. SHOR. EV
FFFA	ANALOG INPUT
FFFD	FIELD ORIENT. KO

OTHER SYMPTOMS

For symptoms not included in the table below or if the problem persists after the proper remedies have been taken, consult your sales or service dealer.

Symptoms	Major causes	Remedies
Left and right operating levers do not move smoothly	• Insufficient grease on the left and right operating levers	• Grease the levers. Refer to page 5-47.
	• Boot is taken off error	• Replace the boot.
Travel levers, blade lever and pedals do not move smoothly	• Insufficient grease on travel levers, blade lever and pedals	• Grease the levers and pedals. Refer to page 5-47.
Hoe attachment, slewing or traveling operation not possible	• Safety lock lever is raised (locked)	• Lower (release) the safety lock lever. Refer to page 2-36.
	• Operation using the lever is locked	• Return the safety lock lever to the lock position, then lower it to the unlock position again. Refer to page 2-36.
Digging force is insufficient	• Hydraulic oil level too low	• Add to the specified level. Refer to page 5-17.
	• Hydraulic oil is not warm enough	• Perform the warm-up. Refer to page 3-8.
	• Hydraulic oil is not of suitable type	• Replace the hydraulic oil. Refer to page 5-35.
Traveling is not possible or not smooth	• Stones or foreign objects are stuck	• Remove the foreign object.
Machine veers to the right/left	• Stones or foreign objects are stuck	• Remove the foreign object.
	• Faulty crawler tension adjustment	• Adjust the crawler to the prescribed tension. Refer to page 5-20.

Symptoms	Major causes	Remedies
Travel speed cannot be changed	• Error in the electrical system	• Adjust or replace (ask your sales or service dealer).
Slewing is not possible or not smooth	• Insufficient grease on slew bearing	• Grease the bearing. Refer to page 5-22.
Hydraulic oil temperature is too high	• Hydraulic oil level too low	• Add up to the specified level. Refer to page 5-17.
	• Oil cooler fins are clogged.	• Clean the oil cooler fins. Refer to page 5-30.
Cluster is not displayed or machine is not started	• Key switch contact is faulty	• Repeat ON/OFF key switch operation two or three times
	• 12 V battery is dead	• Recharge the 12 V battery
	• Electrical system contact is faulty	• Adjust or replace (ask your sales or service dealer).
	• Lea-acid battery switch is in the OFF position.	• Tun the lead-acid battery switch to the ON position. Refer to page 2-28.
	• Emergency stop switch is activated.	• Recover from the emergency stop state. Refer to page 2-29.

Symptoms	Major causes	Remedies
Crawlers come off	• Crawlers too loose	• Increase the tension. Refer to page 5-20.
Charging is disabled (no charge screen is displayed)	• Connection is faulty in the charging cable or the off-board charger	• Properly connect the off-board charger or the charging cable to the machine and the power source.
	• The charging cable or the off-board charger is faulty	• Adjust or replace (ask your sales or service dealer).
	• Power is off at the main power supply socket.	• Turn on the power at the main power supply socket.
	• Both the off-board charger and the charging cable (for the on-board charger) are connected.	• Connect only either the off-board charger or the charging cable (for the on-board charger).
	• The emergency stop switch is activated.	• Recover from the emergency stop state. Refer to page 2-29.
The state of charge is not correctly displayed (battery pack error code 105 appears).	• There is a difference between the battery capacity and the controller's calculation. • The date is set to the past (84 days or more ago) by mistake.	• Use the battery until the state of charge falls below 20%, and then start charging and finish it when the green or white bar appears.

MEMO

LOWERING THE BOOM TO THE GROUND

If the hoe attachment must be lowered to the ground while the motor is stopped, use the following procedure.

PROCEDURE 1
Perform this operation within 10 minutes after the motor is stopped.
1. Sit at the operator's seat.
2. Lower the safety lock lever to the unlock position
3. Tun the key switch to the ON position.
4. Slowly push the operating lever forward to lower the boom.

PROCEDURE 2
This operation is dangerous and requires experience. Ask your sales or service dealer for it.

⚠ WARNING

- **Stop the motor and allow each part of the machine to cool down before performing inspection and maintenance.**
  - **The motor, the hydraulic system and other parts of the machine are hot immediately after the motor is stopped. Touching these parts will cause burns.**
  - **The hydraulic oil is also hot and under high pressure immediately after the engine is stopped. Be careful when loosening the caps or plugs. Working on the machine under these conditions could result in burns or injuries due to the hot oil spurting out.**
- **Keep away from the working area when the hoe attachment is lowered. You may be hit by dirt falling out of the bucket or the hoe attachment as it drops.**
- **Slowly turn the hose nut and lower the boom at a slow pace.**
- **Do not loosen or remove the hoses not located in the specified places. Oil may spurt out if wrongly handled.**

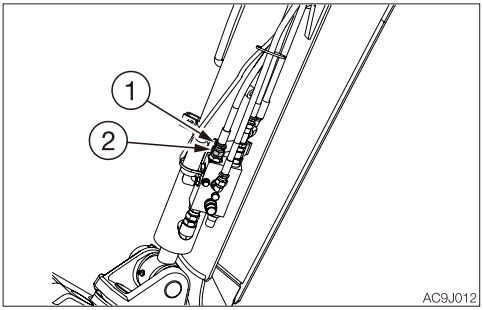

1. Place a pan under the hose to catch the waste oil.
2. Hold the hose fitting (1) with a wrench and slowly loosen the hose nut (2) with another wrench.
3. The oil in the boom cylinder is drained and the hoe attachment is lowered.
4. After the hoe attachment is lowered to the ground, check the safety and stability of the machine.
5. Hold the hose fitting (1) with a wrench and tighten the hose nut (2) with another wrench.
   · Tightening torque: 31.4 N·m (23.1 ft-lb.)

TOWING

⚠ WARNING

When towing, serious injury or death could result, if performed incorrectly or the wire rope being used is inappropriate or not properly inspected.

- **It becomes dangerous if the wire rope breaks or becomes disengaged. Use a wire rope appropriate for the required tractive force.**
- **Do not use a wire rope that is kinked, twisted or otherwise damaged.**
- **Do not apply heavy loads abruptly to the wire rope.**
- **Wear safety gloves when handling the wire rope.**
- **Make sure there is an operator on the machine being towed as well as on the machine that is towing.**
- **Never tow on slopes.**
- **Do not let anyone come near to the wire rope while towing.**

IMPORTANT: Do not tow a machine if its motor does not start. Doing so could damage the hydraulic equipment of the machine.
When recovering a machine from soft terrain such as mud, hoist the machine or contact your sales or service dealer.
IMPORTANT: Be sure to follow the steps below closely when using the towing hole to tow. Failure to heed even one of the steps may cause damage to the towing hole or other parts of the frame.

Towing the machine (when the motor is started, the travel motor runs)
Use the procedure described below to tow heavy objects or the machine itself if it should get stuck in the mud and not be able to get out on its own.

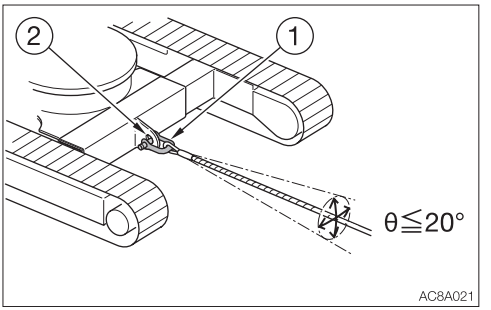

- Permissible force: 28.2 KN (6339 lbf)

1. Attach the wire rope to the shackle (1).
2. Fasten the shackle (1) to the towing holes (2).
3. Make sure that the wire rope is at a cone angle of 20° or less to the travel frame.
4. Move the machine to tension the wire rope.
5. Move the machine at a low speed of 2 km/h (1.24 mph) or less to a place (convenient location for repair) a short distance from the site.

IF THE CANOPY IS DAMAGED

⚠ WARNING

Immediately replace the damaged canopy.
Serious injury or death may occur if the machine is operated with damaged canopy.
Do not operate the machine until the replacement is complete. Do not try to repair the damaged canopy by welding. Doing so could endanger the safety of the canopy.

- Cab parts No. 03386-00181
- Canopy parts No.(1) 03384-00188
- Canopy parts No.(2) 03484-00027

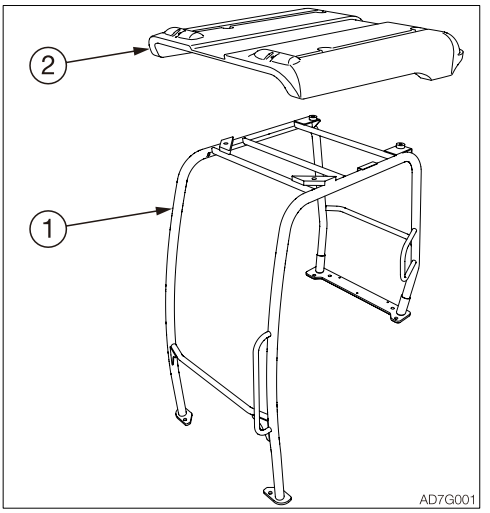

CHARGER ERROR CODE LIST

If an error code appears on the display, consult your sales or service dealer.

Error code	Error details
001	LOGIC FAILURE #1
002	CAN BUS KO
003	WATCHDOG
005	HIGH BATTERY TEMPERATURE
006	MISSING PHASE
007	OVERCURRENT
008	HIGH TEMPERATURE
009	MISMATCH VOLTAGE
010	TIMEOUT
011	OVER DISCHARGE
012	DEEP DISCHARGE
013	BATTERY DISCONNECTED
014	PUMP PRESSURE ERROR
015	THERMAL SENSOR FAILURE
016*	LOGIC FAILURE #2 LOW TEMPERATURE ERROR
017	FLASH CHECKSUM
018	EEPROM CHECKSUM
021	LOGIC FAILURE #2
023	POWER FAILURE #1
024	WRONG INPUT MAINS
025	SHORT OUTPUT
026	WRONG MARKER EEP
027	NO MAINS
028	LOW TEMPERATURE
029	CLOCK BATTERY OFF
030	NODE RESET

*: Refer to page 0-24.

SPECIFICATIONS



BASIC SPECIFICATIONS

Type				Canopy	Cab
MASS					
Operating mass	kg (lb)	Rubber crawlers		1930 (4255)	2125 (4685)
PERFORMANCE					
Bucket capacity (Standard bucket)	m^3 (cu. ft.)	Heaped		0.038 (1.34)	
		Struck		0.028 (0.99)	
Slew speed	min^{-1} (rpm)			7.6 (7.6)	
Travel speed	km/h (mph)	Rubber crawlers	1st	2.1 (1.3)	
			2nd	4.0 (2.5)	
Gradeability	(degrees)			15	
Ground pressure	kPa (psi)	Rubber crawlers		32.1 (4.66)	35.3 (5.12)
LEAD-ACID BATTERY					
Battery capacity (IEC 60095-1)	V-A·h			12-45	
				12-43****	
CCA	A			380	
				320****	
LITHIUM ION BATTERY					
Battery capacity	kWh			24.7	
Battery charge hours*		Off-board charger	0 to 100%	Approx. 4 hours**	
			20 to 80%	Approx. 2 hours**	
		On-board charger	0 to 100%	Approx. 10 hours***	
			20 to 80%	Approx. 6 hours***	
Battery voltage	V			73	

*: The charging time depends on the voltage input to the charger.
**: Estimated time required at 400 V input voltage and 16 A input current.
***: Estimated time required at 200 V input voltage and 16 A input current.
****:Europe

Unit: dB (A)

NOISE EMISSION			
Type		**Canopy**	**Cab**
DECLARED SINGLE-NUMBER NOISE EMISSION VALUES in accordance with ISO 4871*			
Sound power level (2000/14/EC)	Guaranteed sound power level	78	78
Emission sound pressure level at the operator's position**	Emission sound pressure level	62	71
Measured values and Uncertainties			
Sound power level (2000/14/EC)	Measured sound power level	75	76
	Uncertainty	2	2
Emission sound pressure level at the operator's position**	Measured emission sound pressure level	60	69
	Uncertainty	2	2

*: Declared single-number noise emission values are the sum of measured values and the associated uncertainty.
**: Values determined according to noise test code given in ISO 6396.

CHARGER (INPUT SPECIFICATIONS)				
Item		Off-board charger (400 V)	Off-board charger (480 V)	On-board charger
Number of phases		Three phases		Single phase
Input line-to-line voltage	V	340 to 460	408 to 552	95 to 265
Maximum input line current	A	18.4	16	16
Frequency	Hz	50 or 60		

MACHINE DIMENSIONS

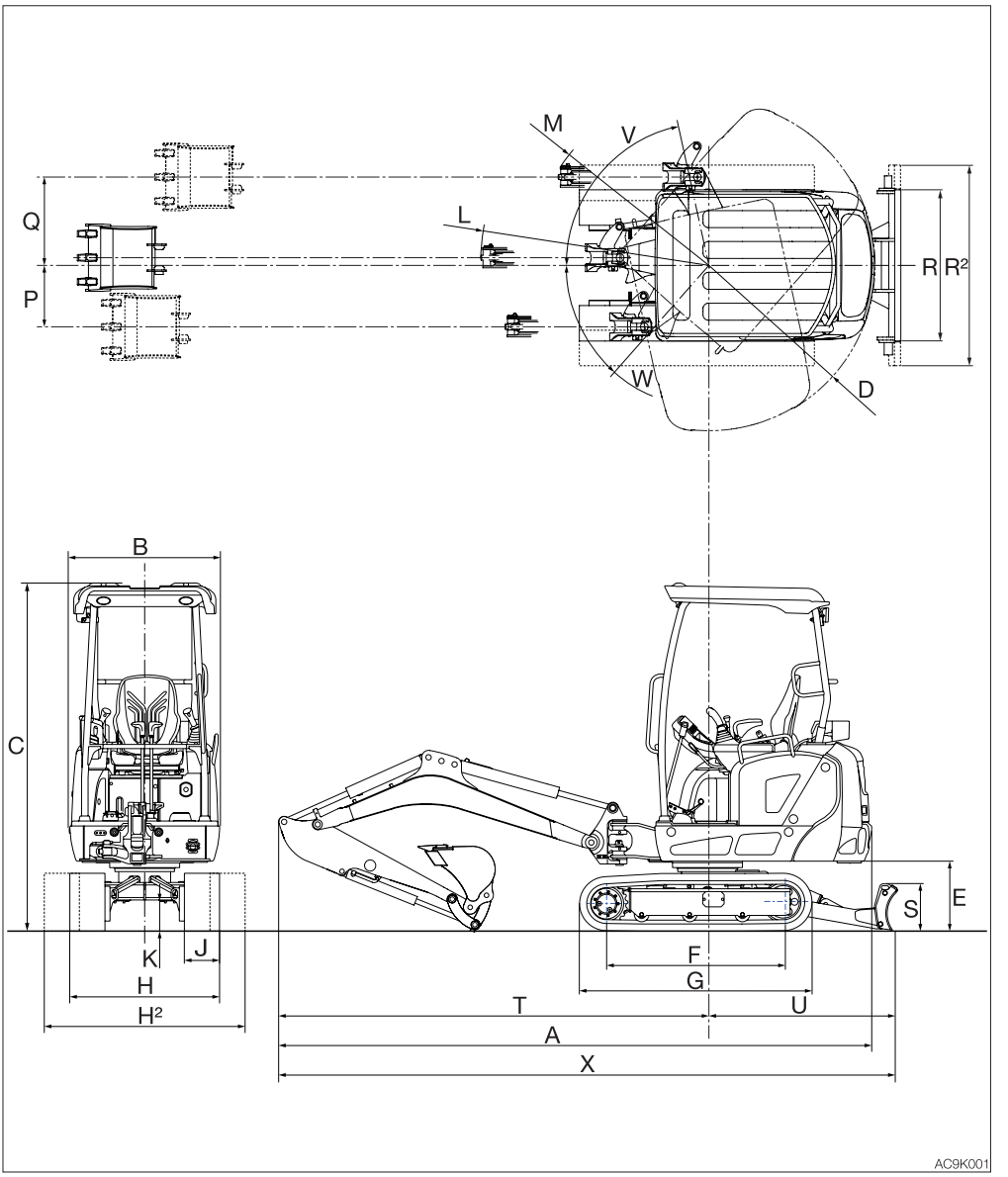

Unit: mm (inch)

	Item	Long arm
		Rubber crawlers
A	Overall length	3880 (152.8)
B	Upperstructure overall width	985 (38.8) 1050 (41.3)*
C	Overall height	2280 (89.8) 2355 (92.7)*
D	Slew radius	1075 (42.3)
E	Clearance height under upperstructure	450 (17.8)
F	Crawler base	1155 (45.6)
G	Crawler overall length	1520 (59.9)
H	Crawler overall width (narrow)	980 (38.6)
H²	Crawler overall width (wide)	1300 (51.2)
J	Crawler shoe width	230 (9.1)
K	Ground clearance of undercarriage	205 (8)
L	Minimum radius of equipment and attachment	1480 (58.2)
M	Minimum radius of equipment at maximum front offset	1155 (45.4)
P	Offset distance of bucket (right swing)	400 (15.7)
Q	Offset distance of bucket (left swing)	570 (22.5)
R	Dozer blade width (narrow)	980 (38.6)
R²	Dozer blade width (wide)	1300 (51.2)
S	Dozer blade height	300 (11.8)
T	Front distance to axis of rotation	2805 (110.4)
U	Dozer blade distance to axis of rotation	1200 (47.2)
V	Boom swing angle (Left)	78°
W	Boom swing angle (Right)	49°
X	Overall length (dozer blade at rear)	4050 (159.4)

*: Machines with a cab

OPERATING RANGES

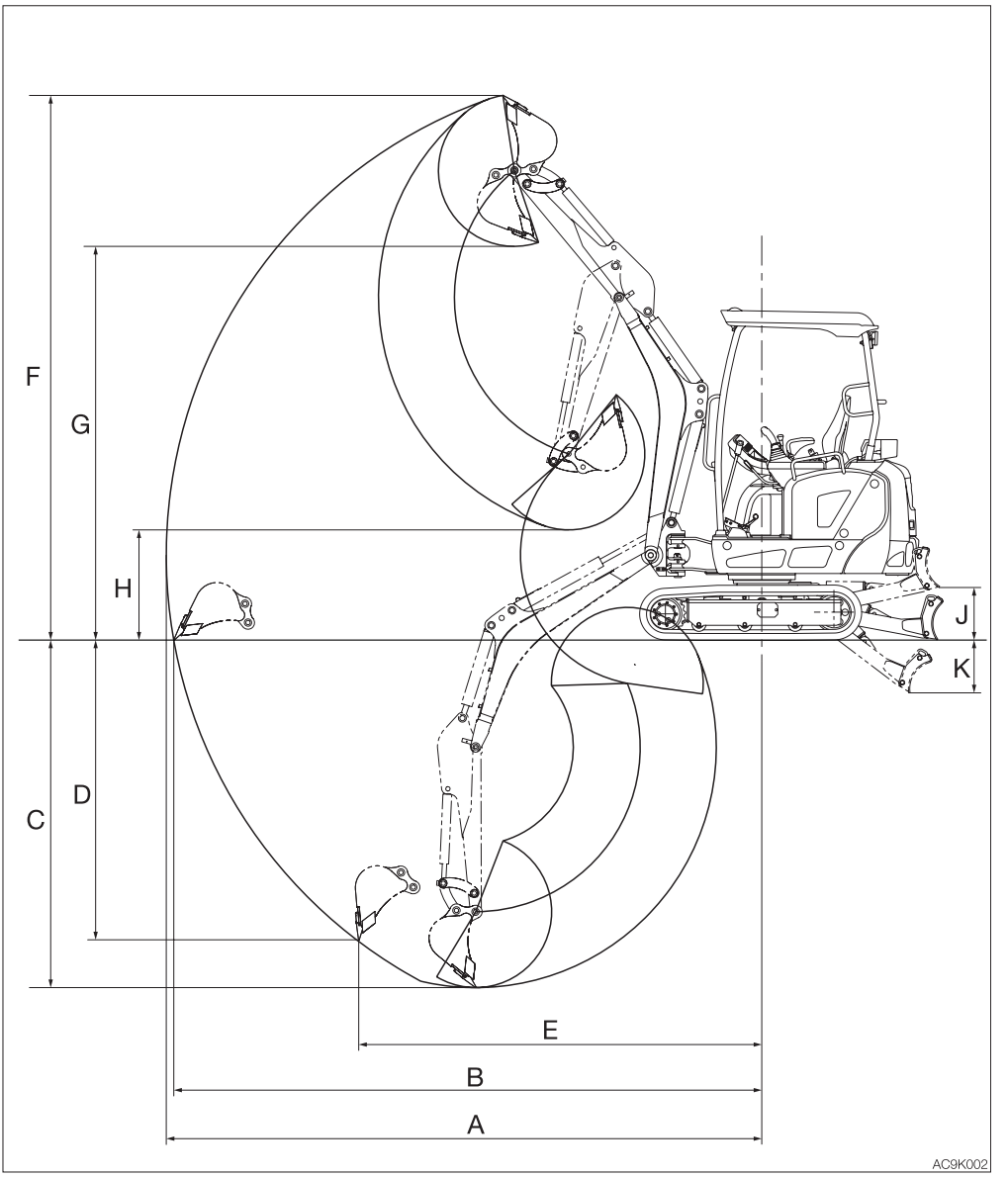

Long arm

Unit: mm (inch)

	Item	Rubber crawlers
A	Maximum reach	4090 (160.9)
B	Maximum reach at ground reference plane	4035 (158.9)
C	Maximum digging depth	2390 (94)
D	Maximum vertical digging depth	2060 (81)
E	Reach at maximum vertical digging depth	2790 (109.9)
F	Maximum height of cutting edge	3740 (147.3)
G	Maximum dumping height	2705 (106.5)
H	Minimum dumping height	755 (29.8)
J	Dozer blade maximum lifting	360 (14.2)
K	Dozer blade maximum lowering	365 (14.3)

MEMO

LIFTING CAPACITIES

Rated lift capacity chart

- The loads in the charts do not exceed 87% of hydraulic lift capacity or 75% of tipping load.
- Figures marked with an asterisk (※) are hydraulically-limited capacities.
- The mass of slings and any other lifting devices shall be deducted from the rated load to determine the net load that may be lifted.
- The load point is the bucket hinge pin, and the bucket posture is with the standard bucket completely retracted under the arm.
- Unit: kg (lbs)

Load hooking system

A load hooking system must be provided with the following capabilities.

1. A system which can withstand two-and-a-half times the rated lift capacity no matter at what position the load is applied.
2. A system that poses no risk of the lifted load falling from the hooking device. For example, equipped with a hook slippage prevention device.
3. A system that poses no risk of the hooking system slipping from the hoe attachment.

⚠ WARNING

- **Do not attempt to lift or hold any load that is greater than these rated values at their specified load radii and height.**
- **The rated lift capacities are based on the machine being level and situated on a firm supporting surface. For safe lifting, the operator is expected to make due allowance for the particular job conditions such as soft or uneven ground, non-level condition, side loads, hazardous conditions, experience of personnel, etc. The operator and other personnel should fully acquaint themselves with the operator's manual furnished by the manufacturer before operating this machine. When operating the machine, the safety rules of the equipment must also be followed.**
- **Do not travel while lifting a load; It is very dangerous.**

Long arm <Canopy>

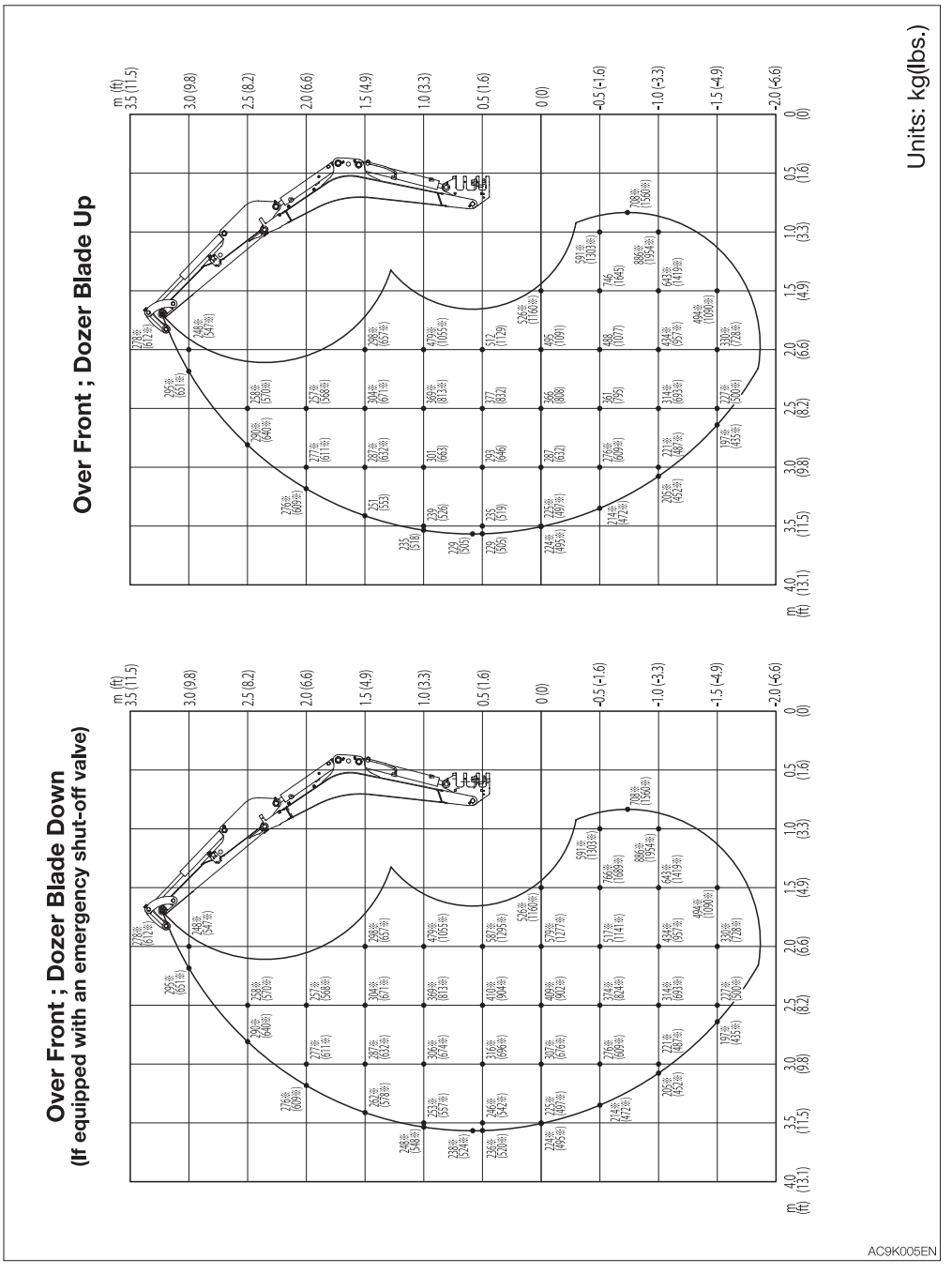

AC9K005EN

Long arm < Canopy>

Units: kg(lbs.)

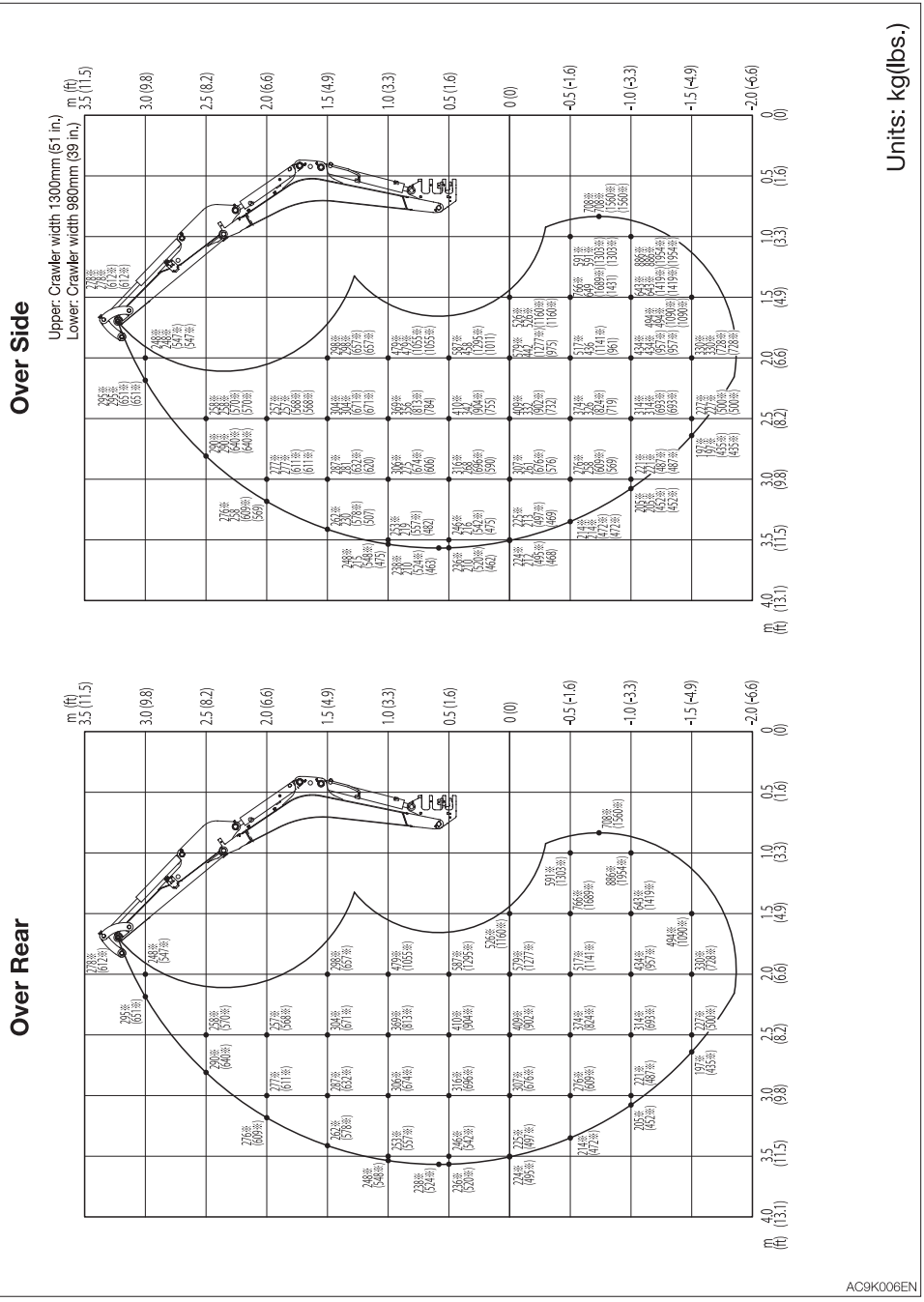

Long arm <Cab>

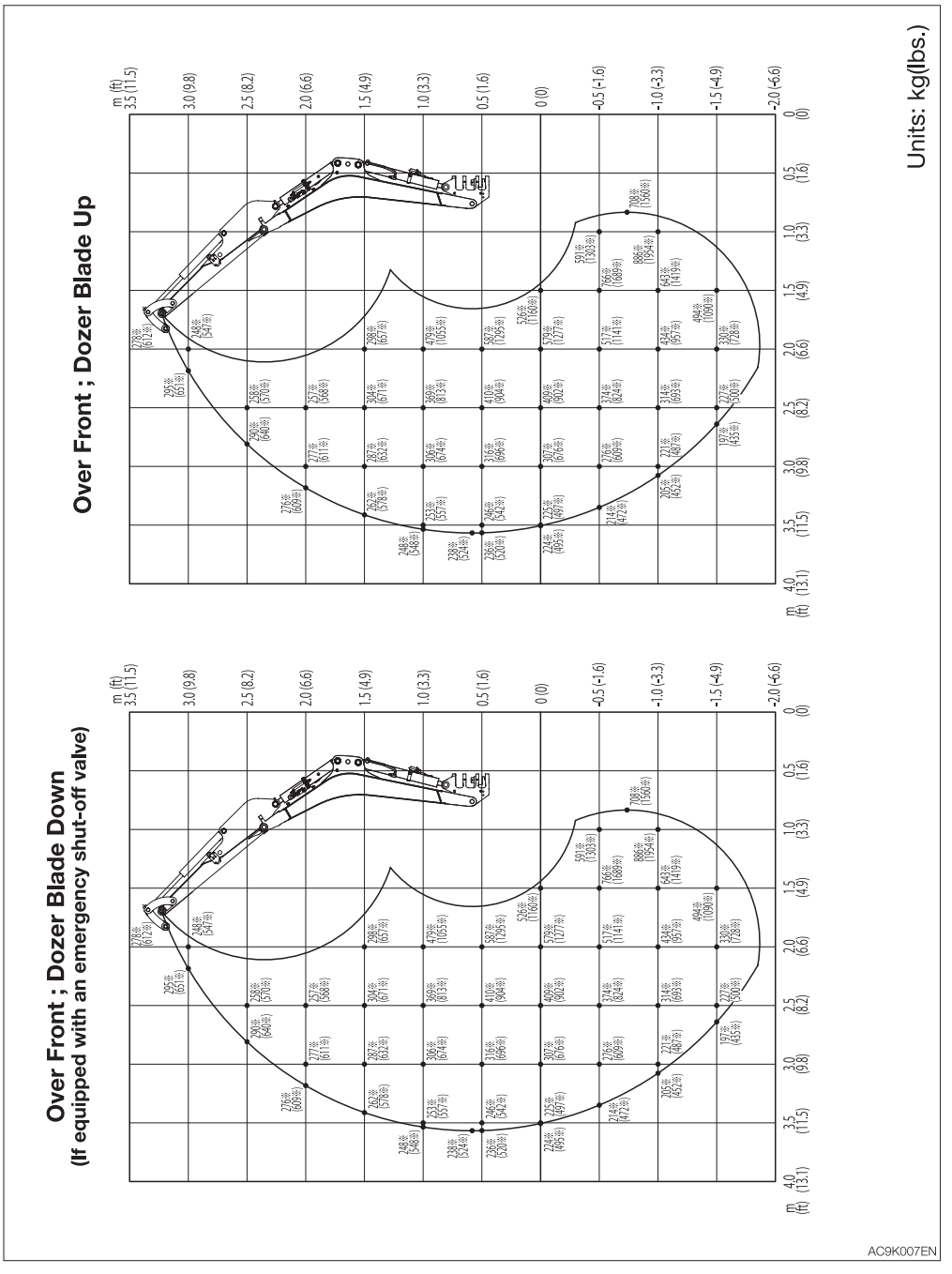
Over Front ; Dozer Blade Up
Over Front ; Dozer Blade Down
(If equipped with an emergency shut-off valve)
Units: kg(lbs.)
m (ft)
3.5 (11.5)
3.0 (9.8)
2.5 (8.2)
2.0 (6.6)
1.5 (4.9)
1.0 (3.3)
0.5 (1.6)
0 (0)
-0.5 (-1.6)
-1.0 (-3.3)
-1.5 (-4.9)
-2.0 (-6.6)
4.0 (13.1)
3.5 (11.5)
3.0 (9.8)
2.5 (8.2)
2.0 (6.6)
1.5 (4.9)
1.0 (3.3)
0.5 (1.6)
0 (0)
m (ft)
AC9K007EN

Long arm <Cab>

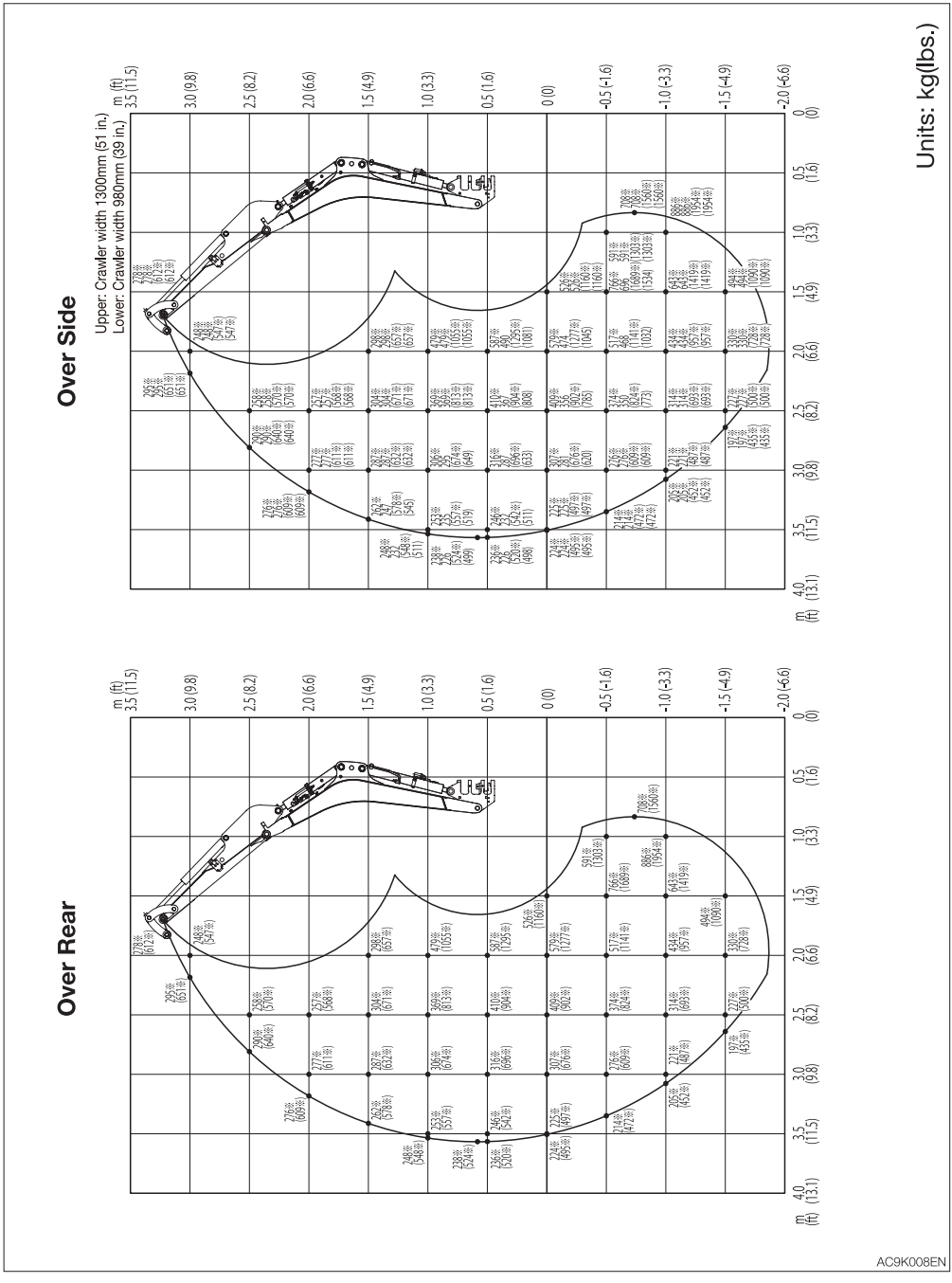
Over Side
Upper: Crawler width 1300mm (51 in.)
Lower: Crawler width 980mm (39 in.)
Over Rear
Units: kg(lbs.)
AC9K008EN

OPTIONS

GENERAL PRECAUTIONS

SAFETY PRECAUTIONS

⚠ WARNING

When removing or installing an attachment or optional part, take the following precautions.

- Consult with Takeuchi before installing an optional attachment.
- Do not use any attachments not approved by Takeuchi. Doing so may cause safety problems. Or, it may adversely affect the machine's operation or service life.
- We will not be held responsible for any injuries, accidents or damage to its products caused by the use by a non-approved attachment.
- Select a firm, level work area. Also, be sure to park in a well ventilated place.
- Clean the site, clear obstacles and dangerous objects, and clean up spilled oil or grease.
- When lifting, be sure to designate a person to act as a signalman. Follow the instructions of the signalman regarding the procedure and measures.
- When it is necessary to temporally place a heavy object or an attachment on the ground during removal or installation, be sure to place it in a stable position.
- Keep everyone out of the area when lifting. There is a hazard of objects falling or contacting with people in the area.
- Use a crane to move heavy objects (25 kg (55 lb.) or greater).
- Before removing a heavy object, be sure to put a support to it. When lifting with a crane, pay attention to the center of gravity of the load to keep the machine in balance.
- Do not operate the machine while the load is lifted by a crane stand.
- Use the proper procedure when mounting a boom or arm; otherwise serious damage could result. Consult your sales or service dealer for help.

CAUTIONS WHEN INSTALLING ATTACHMENTS

Be sure to perform a test operation after an optional or other special attachment has been replaced. Inspect the hydraulic oil level and recharge it as necessary. Consult your sales or service dealer for detailed procedures on installing/removing attachments.

CAUTIONS WHEN OPERATING ATTACHMENTS

⚠ WARNING

Long attachments reduce stability of the machine. The machine may tip over if it loses the balance when traveling or slewing on slopes.
Never perform the operations listed below as they are extremely dangerous.

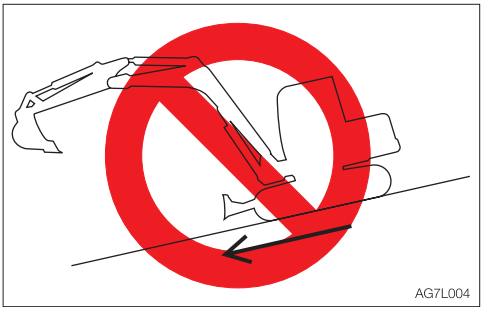

- Traveling down the slopes with the attachment raised



- Traveling across slopes

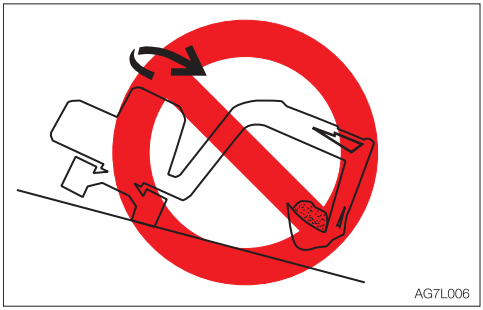

- Slewing on slopes
- If there is a heavy attachment is installed, the machine takes longer distance than usual to come to a complete stop when the stopping operation is performed. Carefully judge the distance so as not to bump into an object around the machine. Keep a safe distance from surrounding obstacles. When a heavy attachment is installed, natural drop (the gradual dropping of the attachment under its own weight when it is stopped in midair) increases.
- The machine can tip over more easily in the lateral direction than in the longitudinal direction.
  - Do not slew sideways with a heavy load at the how attachment. In particular, do not slew sideways on slopes.
  - The attachment is heavier for machines equipped with breakers or crushers than for machines equipped with the standard bucket. Do not operate such machines sideways, especially digging downhill.

ATTACHMENT COMBINATION TABLE

The table below shows which bucket should be installed when the machine is using a long arm. Select a proper bucket by following the table.

⚠ WARNING

- **Consult with Takeuchi before installing an optional attachment.**
- **Do not use any attachments not approved by Takeuchi. Doing so may cause safety problems. Or, it may adversely affect the machine's operation or service life.**
- **We will not be held responsible for any injuries, accidents or damage to its products caused by the use by a non-approved attachment.**
- **The swing stopper must be mounted when a bucket wider than a 450W bucket is mounted. Failure to mount the swing stopper may result in the bucket hitting the machine body.**

√: Can be used.
Δ: Can be used only for light operations (digging and loading of dry and loose soil or mud)
—: Cannot be used.

Bucket	Rated capacity m^3 (cu. yd.)	Bucket cutting width mm (inch)	Long arm 1130 mm (44.5 in.)
260W	0.020 (0.026)	265 (10.4)	√
350W	0.027 (0.035)	335 (13.2)	√
450W (Standard)	0.038 (0.049) 0.046 (0.060)*	435 (17.1)	√
500W	0.043 (0.056)	485 (19.1)	√
3-hole bucket	0.049 (0.064)	457 (18.0)	√
Total bucket mass = Within 127 kg (280 lb.)		Within 485 (19.1)	√
Hydraulic Breaker (TKB-72)			√

*: With a side cutter

MEMO

HYDRAULIC BREAKER

For handling of the breaker, read the hydraulic breaker's manual, provided separately.

⚠ WARNING

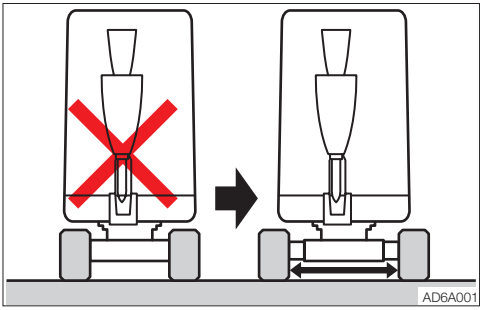

Do not use the breaker when the crawler width is narrowed!

- **Always operate the machine with the crawler width extended to 1300 mm (51.2 in.) to maximize the machine stability. If the machine is operated with the crawler width narrowed 980 mm (38.6 in.), the machine may tip over due to its poor stability.**
- **If the machine must be operated with the narrowed crawler width 980 mm (38.6 in.), traveling should be done after folding the hoe attachment, lowering the boom to lower the center of gravity and keeping the machine facing forward.**

When an optional attachment, such as a breaker, tilted bucket or clamshell, is operated, be sure that the crawler width is extended to 1300 mm (51.2 in.).

IMPORTANT: When installing an attachment, make sure that it is appropriate for the machine being used. Contact your sales or service dealer for advice on selecting attachments.

Cautions on operating

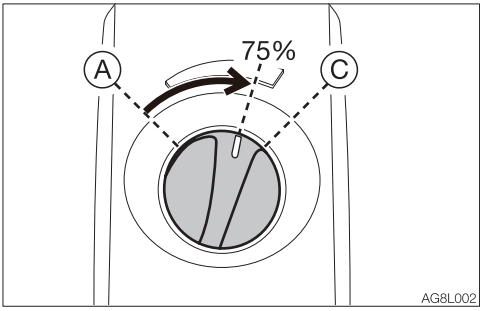

- Start the motor and run it at 75% of the maximum speed.

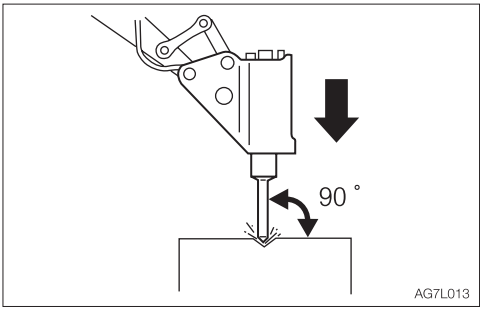

- Pound with the chisel pressed perpendicular to the surface to be pounded.
- When pounding, press the chisel properly against the object to be broken so as to avoid pounding the air.

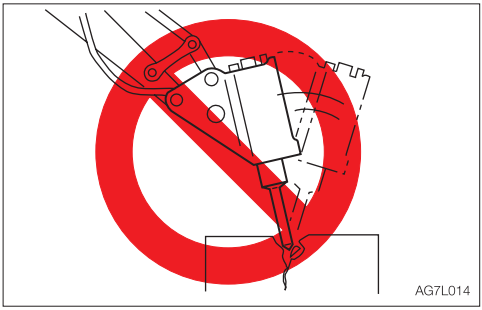

- Do not pry with the chisel or do not pry while pounding.
- Do not move the chisel while pounding.
- Do not pound continuously for over 30 seconds on the same surface.

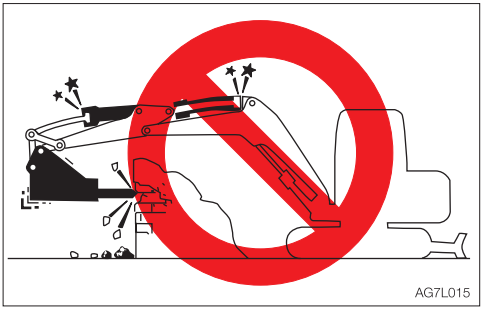

- Do not pound with the cylinder fully extended or retracted (at the stroke end). Leave a margin of at least 50mm (2 in).

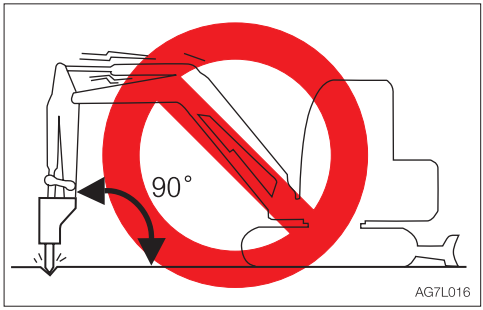

- Do not pound with the arm placed perpendicular to the ground surface.

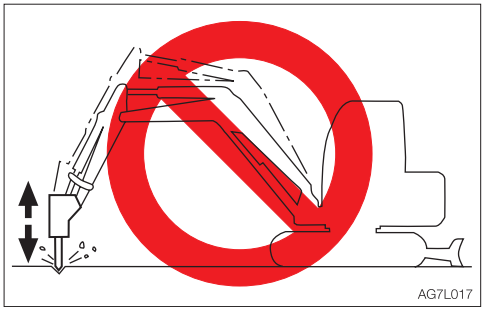

- Do not drop the breaker itself on the object to be broken in order to break it.
- Do not move objects to be broken or rocks with the breaker itself.
- Slew the machine occasionally to cool the motor.
- If a hydraulic hose is vibrating abnormally, nitrogen gas may be leaking from the accumulator. Ask for an inspection early.

REPLACING THE HYDRAULIC OIL REGULARLY

When a hydraulic breaker is used, the oil deteriorates more quickly than that used for a usual operation. Be sure to replace the hydraulic oil and the return filter elements.

- Failure to replace these in time can lead to damage to the machine and the breaker hydraulic system. To improve the service life of the hydraulic systems, be sure to replace the hydraulic oil and return filter element after the number of hours shown on the diagram below.
- When replacing the hydraulic oil, clean the suction strainer.

Replacement interval (hours)

Item	Hydraulic oil	Filter element
1st time	—	25
2nd time	—	100
Periodically	1200 (600)	200

When the breaker operating ratio is 100%.

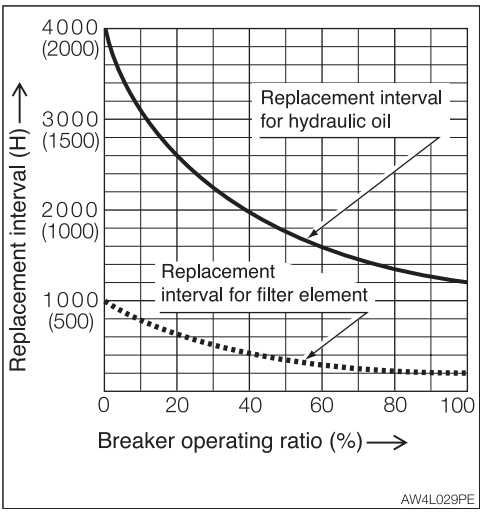

( ): When using conventional antiwear hydraulic oil.

TRAVEL ALARM

The alarm sounds while the machine is traveling and stops when the machine stops traveling.
If the alarm does not sound when traveling, the electrical system may be faulty. Consult a Takeuchi sales or service dealer for help.

BIODEGRADABLE OIL

Biodegradable oil is a new type of hydraulic oil that is decomposed into carbon dioxide and water by microorganisms in the soil and water. It is highly safe for living organisms and offers advantages in term of environmental protection.

- Recommended biodegradable oil: Mobile EAL Envirosyn 46H (an ester synthetic oil) and Panolin HLP Synth 46 (an ester synthetic oil).
  When replacing the mineral oil with biodegradable oil, use either of the above brand oil.
  Note that there are oils of other brands, even among ester synthetic oils, which may damage O-rings, packings and seals.
- When switching from a mineral oil to a biodegradable oil, the parking brake torque decreases by about 30%.

REPLACING THE MINERAL OIL WITH BIODEGRADABLE OIL

- A mixture of mineral oil and biodegradable oil or a mixture of different brands of biodegradable oils will result in a decrease in performance of the hydraulic oil, biodegradability and safety. The inside of the hydraulic oil system must be flushed (cleaned) before replacing. The residual mineral oil in the machine should be about 2% or less, as complying with the ISO 15380.
- This operation is dangerous and requires experience. Ask a Takeuchi sales or service dealer for help.

Flushing

To be performed by a Takeuchi sales or service outlet

1. Drain the hydraulic oil (mineral oil) from the hydraulic oil tank and clean the inside of the tank and suction strainer.
   Refer to “Replacing the hydraulic oil and cleaning the suction strainer” on page 5-35.
2. Remove the cylinder hoses and drain the hydraulic oil (mineral oil) from inside the cylinders.
3. Supply new biodegradable oil to the hydraulic oil tank.
4. Bleed the air from the hydraulic pump and cylinders and pressurize the hydraulic tank.
5. Operate the hydraulic devices for 30 minutes.
6. Drain the biodegradable oil from the tank and cylinders.
7. Replace the hydraulic oil return filter with a new filter.
8. Repeat steps 3 and 4.
9. Operate the hydraulic devices for 30 minutes.
10. Drain the biodegradable oil from the tank and cylinders.
11. Repeat steps 3 and 4.
12. Operate the hydraulic devices for 1 hour.
13. Drain the biodegradable oil from the tank and cylinders.
14. Replace the return filter with a new filter.
15. Repeat steps 3 and 4.
16. Operate the hydraulic devices, then check for oil leakage.

There is no need to flush the hydraulic oil system when switching from biodegradable to mineral hydraulic oil.

TAKEUCHI FLEET MANAGEMENT (TFM)

⚠ CAUTION

- **Never disassemble the TFM. It may cause injury or failure.**
- **Any damage to the TFM device or wire harness may cause damage to the device and surrounding equipment.**



- Takeuchi Fleet Management (TFM) is a system that manages machine position information, operation information, and machine status using a communication device installed in the machine.
- Machines that support TFM are equipped with communication devices and are labeled as above.
- A communication contract is required to use TFM. Please contact our sales service for information regarding the contract.

IMPORTANT:

- **The TFM equipment has been tested and found to comply with the limits for a Class A and Class B digital device, pursuant to part 15 of the FCC Rules. These limits are designed to provide reasonable protection against signal interference when the equipment is operated in a commercial environment. This equipment generates, uses, and can emit radio frequency energy and, if not installed and used in accordance with the instruction manual, may cause signal interference to radio communications.**
- **Operation of this equipment in a residential area may cause signal interference in which the user may be required to take additional steps to correct the interference. To correct any interference issue, move the TFM equipped machine away from the affected device, or, if possible; relocate the affected device away from the TFM equipped machine.**
- **The TFM device uses mobile communication. Therefore, it may not function properly in places where the signal is weak (buildings, tunnels, underground, etc.).**
- **The TFM device complies with the RF radiation exposure limits of the FCC Rules. The product is tested for a separation distance of 0 mm from human bodies. It is advised for those with specific sensitive conditions to avoid close device-body exposure.**
- **Please be aware that storing a machine long-term may result in the loss of communication from the TFM device if its internal battery is drained.**
- **The TFM device consumes a small amount of machine battery power even when the key is in the OFF position. For extended storage, see “Maintenance during extended storage period” on page 5-52.**

Specification

M7H (For Europe)

Frequency	Power
UMTS/HSPA:	
900 MHz	0.25 W
2100 MHz	0.25 W
GSM/GPRS:	
900 MHz	2 W
1800 MHz	1 W
GSM/EDGE:	
900 MHz	0.5 W
1800 MHz	0.4 W

M7L (For North America)

Frequency	Power
LTE Band:	
700 MHz	0.2 W
850 MHz	0.2 W
1700 MHz (AWS)	0.2 W
1900 MHz	0.2 W
UMTS Band:	
850 MHz	0.25 W
1900 MHz	0.25 W

M7MG

Frequency	Power
LTE Band:	
700 MHz	0.2 W
850 MHz	0.2 W
1700 MHz (AWS)	0.2 W
1900 MHz	0.2 W
UMTS Band:	
850 MHz	0.25 W
1900 MHz	0.25 W

CHANGING THE SWITCH (GRIP) PATTERN OF THE OPERATING LEVER

⚠ WARNING

Before starting an operation, carefully check which pattern you are going to use. If the pattern is changed, change the operation decal affixed to the machine. Failure to do so could cause an accident due to misoperation.

The switch (grip) pattern of the operating lever can be changed. Contact your sales or service dealer for details.

Case 1:

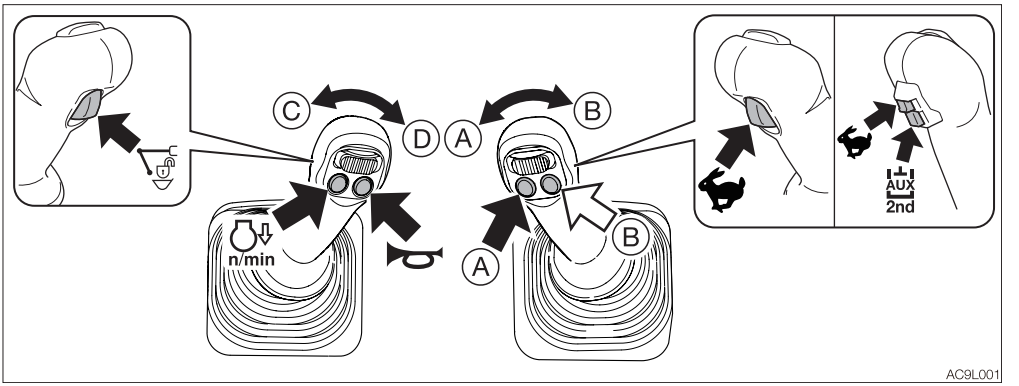

A	Auxiliary 1st hydraulic line (a) operation Refer to “Auxiliary 1st switches” on page 2-31.	B	Auxiliary 1st hydraulic line (b) operation Refer to “Auxiliary 1st switches” on page 2-31.
C	Auxiliary 2nd hydraulic line (c) operation Refer to “Auxiliary 2nd/4th switch (If equipped)” on page 2-32.	D	Auxiliary 2nd hydraulic line (d) operation Refer to “Auxiliary 2nd/4th switch (If equipped)” on page 2-32.
	Auxiliary 3rd hydraulic line operation Refer to “Third auxiliary hydraulic switch and button (If equipped)” on page 2-68.		Deceleration operation Refer to “Deceleration button” on page 2-30.
	Horn operation Refer to “Horn button” on page 2-29		
	Travel speed shift operation Refer to “Travel speed button” on page 2-30.		

CABLE HANGER

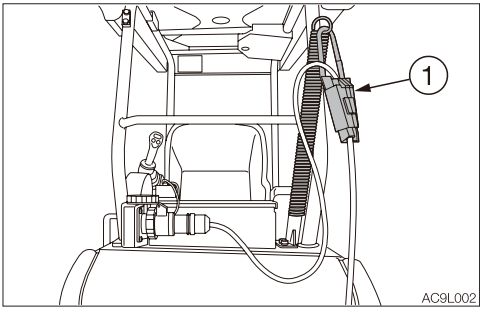

When operating the machine while charging, use the cable hanger (1). When the spring part of the cable hanger is appropriately bent, it can prevent damage to the on-board charging port caused by the charging cable being pulled. It also prevents abrasion due to friction between the cable and the cover.

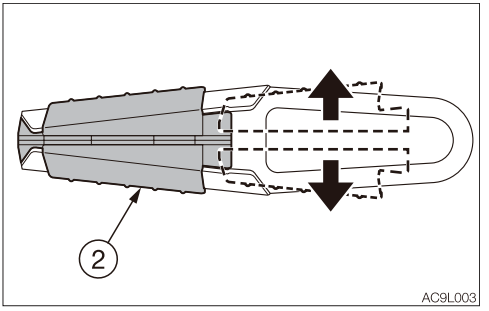

1. Push out to widen the portion (2) where the cable is to be caught.
2. Place the cable in the widened portion (2).
3. Release the portion (2) to catch the cable.

First Published February 2019
Seventeenth Published October 2025

AC9EN016

OPERATOR'S MANUAL

TB20e Mini excavator

Edited and issued by TAKEUCHI MFG. CO., LTD.

Printed in Japan by STATION M Co., Ltd.

ZTR Control Systems, LLC

955 Green Valley Road
London, Ontario, N6N 1E4
Tel: 1-519-452-1233
FAX: 1-519-452-7764

www.ztr.com
info@ztr.com

April 5, 2019

RE: M7H

To whom it may concern,

This letter is to confirm that ZTR product **M7H** sufficiently demonstrate compliance to CE and the Radio Equipment Directives (RED). The M7H satisfies all the technical regulations applicable to the product within the scope of Council Directives 2014/53/EU, 2015/35/EU and 2014/30/EU. The following tests were completed successfully.

EN 60950-1: 2006+A11: 2009+A1: 2010+A12: 2011+A2: 2013
EN62311:2008
ETSI EN 300 328 V2.1.1 (2016-05)
ETSI EN 303 413 V1.1.1 (2017-06)
Draft ETSI EN 301 489-52 V1.1.0 (2016-11)
Draft ETSI EN 301 489-17 V3.2.0 (2017-03)
Draft ETSI EN 301 489-1 V2.2.0 (2017-03)
Draft ETSI EN 301 489-19 V2.1.0 (2017-03)
EN 55032: 2015
ETSI EN 301 511 V12.5.1 (2017-03)
ETSI EN 301 908-1 V11.1.1 (2016-07)
ETSI EN 301 908-2 V11.1.2 (2017-08)

(Title(s) of regulations, standards, etc.)

All essential radio test suites have been carried out.

The tests were carried out by a notarized 3rd party certification lab MiCOM Labs inc.

This Declaration of Conformity is issued under the sole responsibility of ZTR Control Systems (or the manufacturer).

Please direct any test results questions or concern to ZTR's Engineering Group for clarification.

Regards,

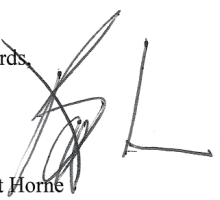

Brent Horne
Director of Product Development
ZTR Control Systems

Trackunit Aps
Gasvaerksvej 24 4.sal, 9000 Aalborg, Denmark
www.trackunit.com

EU declaration of conformity

Hereby, Trackunit Aps declares that the radio equipment type **Trackunit M7MG** complies with the essential requirements of Directive 2014/53/EU.

3.1 (a) protection of health and safety of persons and of domestic animals and the protection of property, including the objectives with respect to safety requirements set out in Directive 2014/35/EU

Standard used: EN 62368-1:2020+A11:2020
EN 62311:2020
EN 62133-2:2012

3.1 (b) adequate level of electromagnetic compatibility as set out in Directive 2014/30/EU

Standard used: EN 301 489-1 V2.2.3
EN 301 489-17 V3.2.4
EN 301 489-19 V2.2.0
EN 301 489-52 V1.2.1

3.2 the equipment is so constructed that it both effectively uses and supports the efficient use of radio spectrum in order to avoid harmful interference.

Spectrum used:	Bluetooth:	2,402 – 2,480 GHz,	Max. 10 dBm EIRP
	Positioning:	1,559 – 1,610 GHz,	Receive only
	Cellular 4G:	B1, B3, B5, B8, B20, B28,	Max. 27 dBm EIRP
	Cellular 2G:	GSM/GPRS/EDGE; 900 / 1800	Max. 33 dBm EIRP

Standard used: EN 300 328 V2.2.2
EN 303 413 V1.2.1
EN 301 511 V12.5.1
EN 301 908-1 V13.1.1
EN 301 908-13 V13.1.1

Complies with the essential requirements of Directive 2011/65/EU and Directive 2015/863/EU on the Restriction of use of certain Hazardous Substances (RoHS 3).

Complies with the essential requirements of the Regulation 1907/2006/EC regarding Registration, Evaluation, Authorization and Restriction of Chemicals (REACh).

Complies with Directive 2012/19/EU on Waste Electrical and Electronic Equipment (WEEE).

Signed for and on behalf of Trackunit Aps
Aalborg, 01 December 2022

DocuSigned by:
Søren Brogaard
DBFCD953D519425...

Søren Brogaard, CEO

Declaration of Conformity

We herewith declare that following named machine, based on its conception and design and in the form brought into service is in accordance with the relevant, basic safety and health requirements of the following EU directives. In case of any alteration of the machine not coordinated with us, this certificate loses its validity.

Designation of the machine	Compact Excavator
Manufacturer	TAKEUCHI MFG. CO., LTD 205 Uwadaira, Sakaki-machi, Hanishina-gun, Nagano 389-0605, Japan

Model TB20e

The machine is in accordance with the requirements of EU directives:

1) Machinery directive: 2006/42/EC and appendix
2) Electromagnetic compatibility-regulation 2014/30/EU and appendix
3) Noise directive 2000/14/EC (Evaluation procedure according to appendix VI), 2005/88/EC and appendices.

Harmonized norms: EN474-1:2022, EN474-5:2022.

Compiler of the technical files:
Romain Loffredi
Takeuchi France S.A.S.
Parc d'Activités des Béthunes
3, avenue de la Mare 95310 SAINT OUEN L'AUMONE
CS 29258 – SOA

Issued in Sakaki, Japan
Toshiya Takeuchi, President



WARNING:

Cancer and Reproductive Harm –
www.P65Warnings.ca.gov