AFTER THE INITIAL 250 HOURS (ONLY FOR NEW MACHINES)

REPLACING THE SLEW MOTOR GEAR OIL

⚠ WARNING

- Stop the engine and allow each part of the machine to cool down before performing maintenance.
  - The slew motor is hot immediately after the engine is stopped. Touching it will cause burns.
  - The gear oil is also hot and under high pressure immediately after the engine is stopped.
    Be careful not to touch the oil when loosening the plug. Working on the machine under these conditions could result in burns or injuries.
- When performing maintenance on the machine, clean up the foot area and strictly observe the following so as not to fall:
  - Do not spill oil or grease.
  - Do not leave tools scattered around.
  - Watch your step when walking.
  - Lower the boom so that the attachment rests on the ground.
- Never jump down from the machine. Use the steps and handrails when climbing up and down the machine, and always support your body at three points with your hands and feet.
- The pressure in the reduction gear case of slew motor may cause oil or the cap to fly out. Loosen the cap slowly to release the pressure.

<Applicable machine models 514800502 to 514800667>
<Applicable machine models 514900333 to 514900927>

1. Remove the cover.

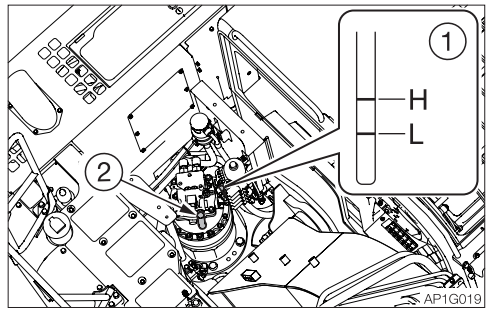

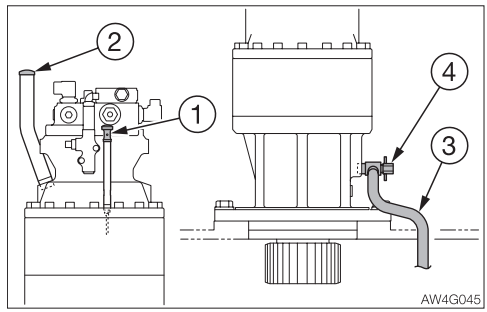

2. Remove the cap (2).
3. Place a pan under the hose (3) to catch the waste oil.
4. Loosen the drain valve (4) and drain the oil.
5. Tighten the drain valve (4).
6. Add oil up to the upper limit (H) of the level gauge (1).
   Problems could arise if the oil level is either too low to too high.
7. Tighten the cap (2).

<Applicable machine models 514800668 or later>
<Applicable machine models 514900928 or later>

1. Remove the cover.

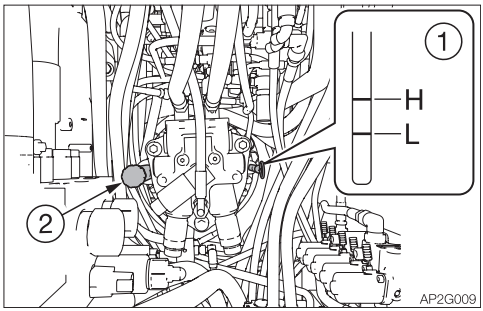

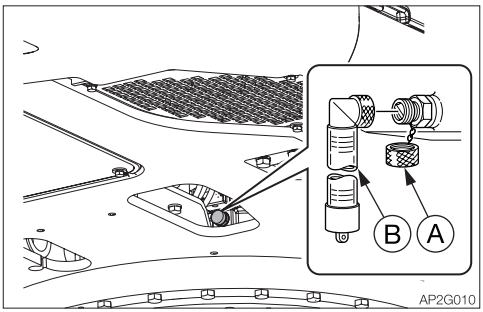

2. Remove the cap (2).
3. Place a pan under the plug to catch the waste oil.
4. Remove the cap (A), install connector (B) and drain the oil. (The oil comes out when the screw is tightened.)
5. Remove the connector (B) and install the cap (A).
6. Add oil up to the upper limit (H) of the level gauge (1).
   Problems could arise if the oil level is either too low to too high.
7. Tighten the cap (2).

REPLACING THE TRAVEL MOTOR GEAR OIL

⚠ WARNING

- **Stop the engine and allow the machine to cool down before performing maintenance.**
  - **The travel motor is hot immediately after the engine is stopped. Touching it will cause burns.**
  - **The gear oil is also hot and under high pressure immediately after the engine is stopped. Be careful when loosening the plugs. Working on the machine under these conditions could result in burns or injuries.**
- **The pressure in the reduction gear case of travel motor may cause oil or the plug to fly out. Loosen the plug slowly to release the pressure.**

IMPORTANT: If the percentage of the traveling time within the total operating time is high, replace the gear oil earlier than the specified time.

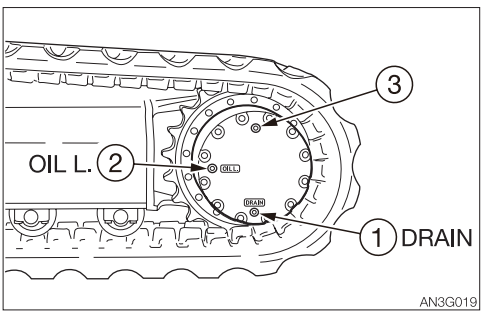

1. Set the travel motor so that plug (1) is at the very bottom.
2. Place a pan under the plug (1).
3. Remove the plugs (1), (2) and (3) and drain the oil.
4. Rewrap the plugs with new sealing tape.
5. Tighten the plug (1).
   - Tightening torque: 98 N·m (72.3 ft-lb.)
6. Add oil through the hole of the plug (3) until oil flows out of the hole of the plug (2).
7. Tighten the plugs (2) and (3).
   - Tightening torque: 98 N·m (72.3 ft-lb.)

EVERY 250 HOURS

INSPECTING THE SLEW MOTOR GEAR OIL

⚠ WARNING

- Stop the engine and allow each part of the machine to cool down before performing maintenance.
  - The slew motor is hot immediately after the engine is stopped. Touching it will cause burns.
  - The gear oil is also hot and under high pressure immediately after the engine is stopped.
    Be careful not to touch the oil when loosening the plugs. Working on the machine under these conditions could result in burns or injuries.
- When performing maintenance on the machine, clean up the foot area and strictly observe the following so as not to fall:
  - Do not spill oil or grease.
  - Do not leave tools scattered around.
  - Watch your step when walking.
  - Lower the boom so that the attachment rests on the ground.
- Never jump down from the machine. Use the steps and handrails when climbing up and down the machine, and always support your body at three points with your hands and feet.
- The pressure in the reduction gear case of slew motor may cause oil or the plug to fly out. Loosen the plug slowly to release the pressure.

Inspection

1. Remove the cover.

<Applicable machine models 514800502 to 514800667>
<Applicable machine models 514900333 to 514900927>

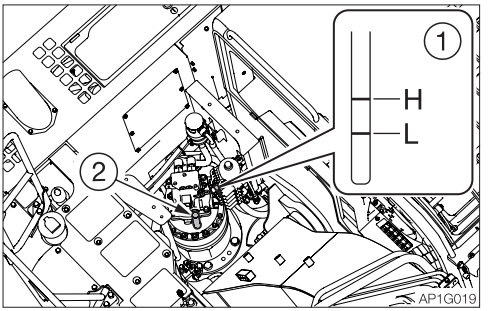

<Applicable machine models 514800668 or later>
<Applicable machine models 514900928 or later>

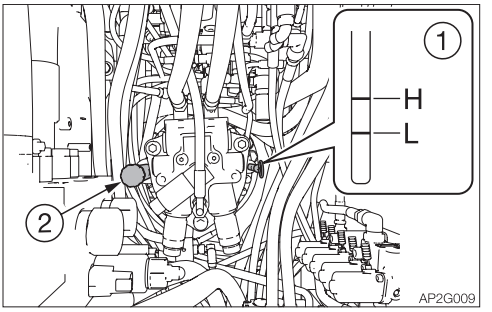

2. Take out the level gauge (1) and wipe off the oil with a rag.
3. Fully insert the level gauge (1) again, and then pull it out.
4. Check the oil left on the level gauge (1).
   The level should be between the upper limit (H) and the lower limit (L).
   If it is below the lower limit (L), replenish.

Replenishing

1. Remove the oil filler cap (2).
2. Add oil up to between the upper limit (H) and the lower limit (L) of the level gauge (1).
   Problems could arise if the oil level is either too low or too high.
3. Tighten the oil filler cap (2).

CLEANING THE COOLER FINS

⚠ WARNING

Wear required appropriate equipment such as protective goggle and filter mask when using compressed air, as metal fragments or other objects can fly and cause serious injury.

IMPORTANT: Be careful not to damage the fins when cleaning.

- **When using compressed air or pressurized water, make sure the pressure is no higher than 200 kPa (28 psi) and hold the nozzle sufficiently away from the fins.**

IMPORTANT: When using water, cover the electrical system to prevent water from getting in.

IMPORTANT: When operating the machine in very dusty places, perform inspection and maintenance operations every day.

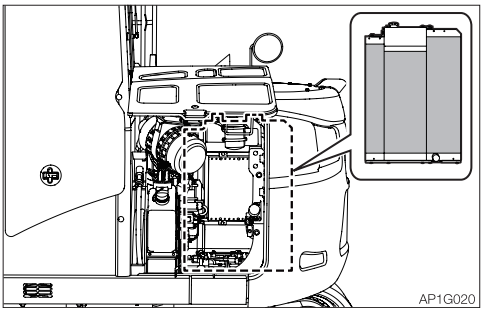

1. Open the left side cover.
2. Blow compressed air on the fins to remove mud and dirt stuck on them.

INSPECTING AND ADJUSTING THE COMPRESSOR BELT (AC)

Refer to “Inspecting and adjusting the compressor belt (AC)” on page 5-38.

CLEANING THE AIR FILTERS (AC)

⚠ WARNING

Wear required appropriate equipment such as protective goggle and filter mask when using compressed air, as metal fragments or other objects can fly and cause serious injury.

Clean the filters immediately after operating in dusty places.
If the filters are clogged, the air flow is reduced and a booming sound is heard from the air conditioner unit.

Removing the filters

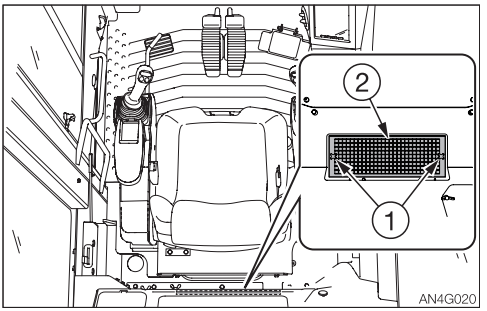

1. Move the seat all the way forward, and then fold down the backrest toward the front.
2. Loosen the knobs (1) and remove the circulation filter (2).
   Circulation filter (2): Part No. 19115-06736

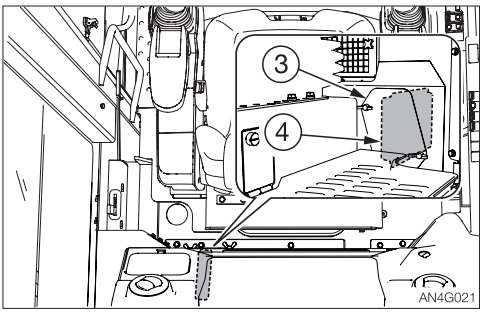

3. Loosen the knobs and remove the cover (3).
4. Remove the ventilation filter (4).
   Ventilation filter (4): Part No. 19115-13680
5. Use compressed air or water to clean the filters, depending on how dirty they are.

Cleaning

1. Blow dry, compressed air (138 kPa or 20 psi or less) directly on the filters from the inside, moving up and down along the pleats.
   Be sure to keep the nozzle at an adequate distance from the filters.
2. Wash the filter with neutral detergent if it is very dirty. Dry the filter completely after washing it.

Replacing

Replace the filter with a new one once a year or if it is still clogged after blow-drying with compressed air and washing.

CLEANING THE CONDENSER (AC)

⚠ WARNING

Wear required appropriate equipment such as protective goggle and filter mask when using compressed air, as metal fragments or other objects can fly and cause serious injury.

IMPORTANT: Be careful not to damage the fins when cleaning.

- **When using compressed air or pressurized water, make sure the pressure is no higher than 200kPa (28 psi) and hold the nozzle sufficiently away from the fins.**

If the condenser is dirty, heat will not discharge properly. Wash dirt off the condenser with water.

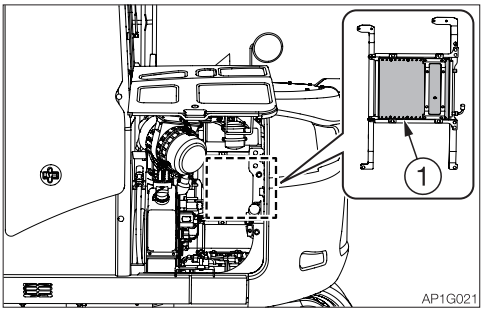

1. Open the left side cover.
2. Clean the condenser (1).

INSPECTING THE REFRIGERANT (GAS) LEVEL (AC)

⚠ WARNING

- **Exposure of the eyes or hands to the cooler's refrigerant could result in blindness or frostbite. Never touch the refrigerant or loosen the parts of the cooling circuit.**
- **Keep flames away if the refrigerant gas is leaking.**
- **The high-pressure pipes of the air conditioner can be very hot (80 to 120°C or 176 to 248°F). Be careful not to burn yourself.**

The cooling capacity decreases if the amount of refrigerant is insufficient. Inspect the refrigerant level using the sight glass (2) on the top of the receiver dryer (1).

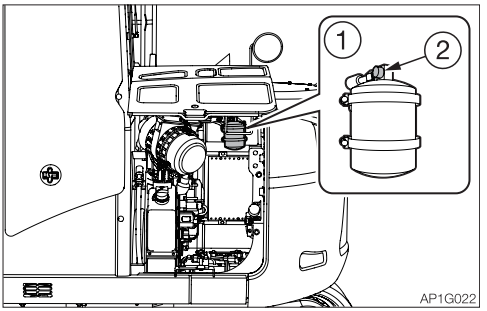

1. Open the left side cover.
2. Inspect the places for the conditions below.

Places for inspection	Conditions
Cab door	Fully open
Temperature control dial	Set fully to the COOL side
Fan speed	High
Ventilation / Circulation select switch	Circulation
Engine speed	Maximum speed
Air conditioner switch	ON

3. Inspect the refrigerant by watching the flow of air bubbles through the sight glass (2).
   Refer to "Check list for refrigerant volume" on page 5-53.
4. Open the engine hood.

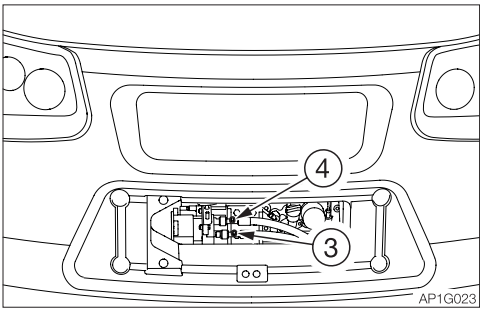

5. Check the temperature of the compressor's high pressure pipe (3) and low pressure pipe (4).
   Refer to "Check list for refrigerant volume" on page 5-53.

Check list for refrigerant volume

Air conditioner	Normal	Abnormal		
High/low pressure pipe temperature	High pressure pipe is hot (80 to 120°C or 176 to 248°F), low pressure pipe is cold (8 to 15°C or 46 to 59°F). Clear difference in temperature between the pipes.	High pressure pipe is warm, low pressure pipe is slightly cool. No significant difference in temperature between the pipes.	Little difference in temperature between the high-pressure pipe and the low-pressure pipe.	High pressure pipe is hot, low pressure pipe is slightly cool. A significant difference in temperature between the pipes.
Pipe connection	Normal	Some places are dirty with oil.	Some places are extremely dirty with oil.	Normal
Sight glass	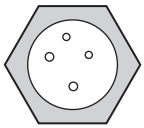 AG7G064 Almost transparent with some bubbles. Fully transparent when the engine speed is increased or decreased.	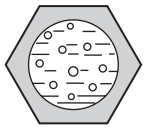 AG7G065 Flow of bubbles can be seen constantly. Sometimes transparent or white with bubbles.	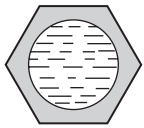 AG7G066 Mist-like flow is faintly visible.	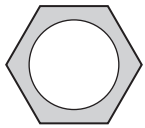 AG7G067 No bubbles is visible, even when the fan is set to High and the engine is idling.
Refrigerant level	Proper level	Refrigerant may be leaking.	Refrigerant has leaked; little is left.	Refrigerant level too high

If the air conditioner is not working
If the air conditioner does not work well, set the fan switch to OFF and contact your sales or service dealer for inspection and/or repairs.

IMPORTANT: Continued use of the air conditioner when it is not working properly will damage its various parts.
IMPORTANT: Using the air conditioner when there is no refrigerant will damage the compressor.
IMPORTANT: Always consult your sales or service dealer for replacing the refrigerant. Be sure to use R134a refrigerant (1800 g or 4 lb.).

EVERY 500 HOURS

LUBRICATING THE SLEW BEARING

⚠ WARNING

Do not slew while lubricating. Doing so is dangerous, as you may get caught in the machine.

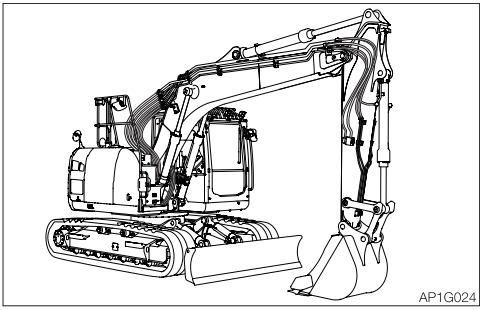

1. Stop the engine with the machine in the posture shown on the figure above.

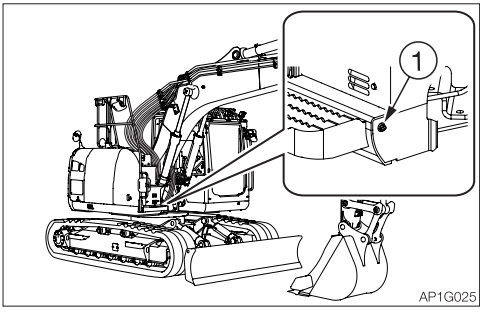

2. Use the grease gun to grease the grease fitting (1).

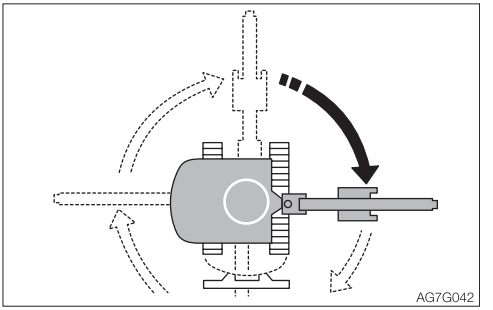

3. Start the engine, lift the bucket and slew clockwise 90°.
4. Lower the bucket to the ground, and then stop the engine.
5. Repeat the steps 2 to 4 above three times.
6. Wipe off the grease expelled from the slew bearing and grease fitting.

REPLACING THE ENGINE OIL AND THE OIL FILTER

⚠ WARNING

- **When performing maintenance on the machine, clean up the foot area and strictly observe the following so as not to fall:**
  - **Do not spill oil or grease.**
  - **Do not leave tools scattered around.**
  - **Watch your step when walking.**
  - **Lower the boom so that the attachment rests on the ground.**
- **Never jump down from the machine. Use the steps and handrails when climbing up and down the machine, and always support your body at three points with your hands and feet.**
- **Be sure to stop the engine before performing the inspection and maintenance.**
- **The parts of the machine are hot immediately after the engine is stopped. Be careful not to burn yourself.**
- **Be aware of the high-temperature engine oil. You could burn yourself with it.**

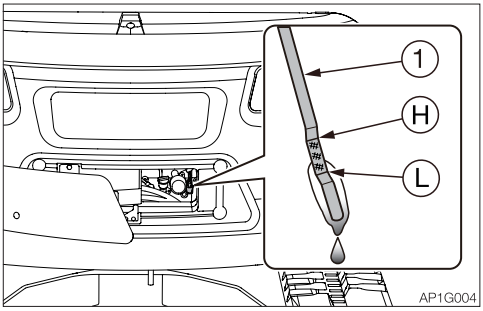

1. Open the maintenance cover B and remove the oil filler cap (2).

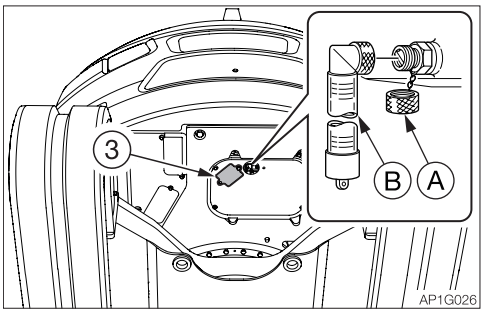

2. Loosen the bolts and remove the under cover (3).
3. Place a pan under the plug to catch the waste oil.
4. Remove the cap (A), install connector (B) and drain the oil. (The oil comes out when the screw is tightened.)
5. Remove the connector (B) and install the cap (A).

IMPORTANT: Check the waste oil for metal powder. If it contains large amount of metal powder, consult your sales or service dealer.

6. Install the under cover (3).

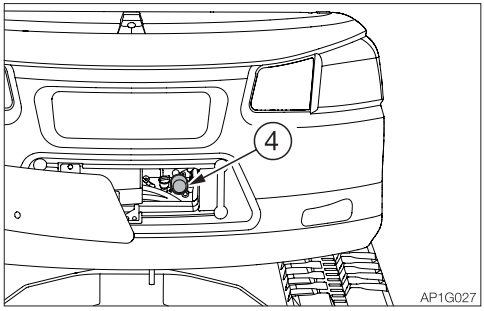

7. Turn the filter (4) counterclockwise with the filter wrench and remove it.
8. Clean the surface on which the filter stand is installed.
9. Apply a thin layer of oil on the packing of the new filter.
10. Install the new filter by hand.
11. Securely tighten the filter with the specified torque after its packing comes in contact with the surface of installation.

Tightening torque: 10 to 12 N·m (7.4 to 8.9 ft-lb)

12. Add oil up to between the upper limit (H) and the lower limit (L) of the dipstick (1). Problems could arise if the oil level is either too low or too high.
13. Tighten the oil filler cap (2).
14. Perform the engine warm-up procedure. (When the engine oil temperature is lower than 80°C)
15. Park the machine on a level ground and wait for five minutes. Inspect the oil level again while the engine oil is still warm.

INSPECTING THE CONCENTRATION OF COOLANT ADDITIVE

⚠ WARNING

- **Do not remove the radiator cap or the drain plug when the cooling water is hot. Stop the engine and wait until the engine and the radiator cool before slowly loosening the radiator cap and the drain plug to remove them.**
- **Always wear the protective goggle and gloves when handling coolant (antifreeze). If any coolant (antifreeze) comes in contact with eyes or skin, wash it off with clean water. Otherwise, it could result in injures.**
- **When performing maintenance on the machine, clean up the foot area and strictly observe the following so as not to fall:**
  - **Do not spill oil or grease.**
  - **Do not leave tools scattered around.**
  - **Watch your step when walking.**
  - **Lower the boom so that the attachment rests on the ground.**
- **Never jump down from the machine. Use the steps and handrails when climbing up and down the machine, and always support your body at three points with your hands and feet.**

1. Open the maintenance cover B.

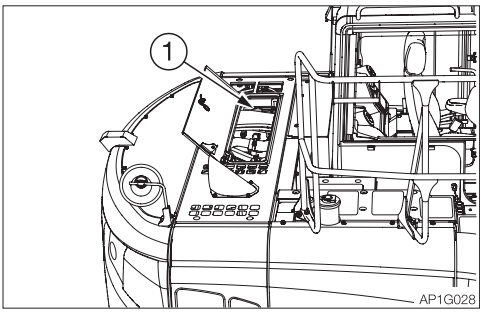

<Low noise package>

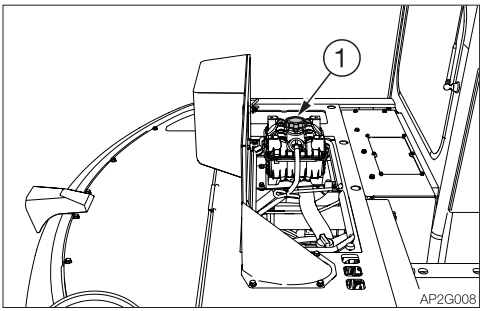

2. Remove the radiator cap or the expansion tank cap (1), and check the concentration of the coolant additive.
3. Adjust the concentration of the coolant additive, as necessary.
4. Install the radiator cap or the expansion tank cap (1).

INSPECTING THE SLEW PINION GEAR

⚠ WARNING

Before inspection, be sure to keep the machine configuration for greasing and stop the engine. Otherwise, you may get caught in the machine.

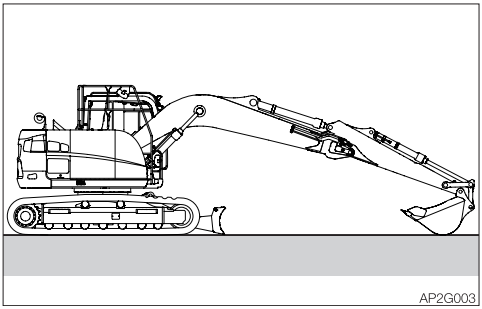

1. Keep the machine configuration for greasing.

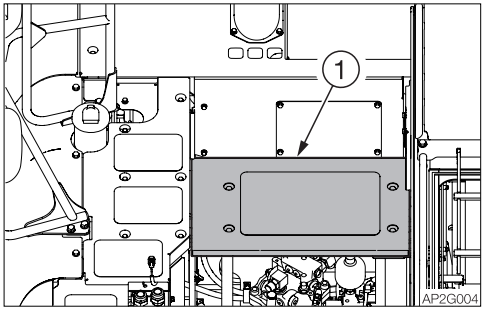

2. Remove the cover (1).

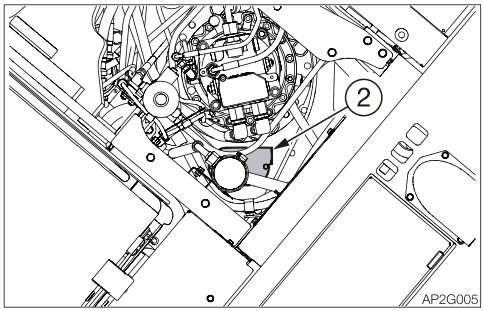

3. Remove the cover (2).
4. Make sure that the gear tooth surface of the slew bearing is well greased.
   If the surface is not adequately greased, add grease.
   If the grease has turned white due to water or mud entered it, replace the whole grease. Consult your sales or service dealer for help.
   Grease full capacity: 12 L (3.2 US gal) or 10.8 kg (24 lbs.)
5. Install the cover (2).
6 Install the cover (1).

EVERY 1000 HOURS

REPLACING THE HYDRAULIC OIL RETURN FILTER

Refer to “Replacing the hydraulic oil return filter” on page 5-36.

REPLACING THE PILOT LINE FILTER

Refer to “Replacing the pilot line filter” on page 5-37.

REPLACING THE SLEW MOTOR GEAR OIL

Refer to “Replacing the slew motor gear oil” on page 5-46.

REPLACING THE TRAVEL MOTOR GEAR OIL

Refer to “Replacing the travel motor gear oil” on page 5-47.

REPLACING THE ENGINE COOLING SYSTEM

Replace the coolant after the two-year operation even if the running time is less than 1000 hours.

⚠ WARNING

- **Stop the engine and allow the machine to cool down before performing maintenance.**
  - **The engine, muffler, radiator and many other parts of the machine are hot immediately after the engine is stopped. Touching these parts will cause burns.**
  - **The engine coolant is also hot and under high pressure immediately after the engine is stopped. Be careful when loosening the caps or plugs. Working on the machine under these conditions could result in burns or injuries due to the hot coolant spurting out.**
- **If maintenance must be performed with the engine running, always work as a two person team communicating each other.**
  - **One person must sit in the operator's seat so that he/she can immediately stop the engine when necessary. He/she must take care not to touch the lever or pedal unless necessary.**
  - **The one who performs maintenance must make sure to keep his/her body or clothing away from the moving part of the machine.**
- **Standing at the back of the machine while the engine is running is extremely dangerous, as the machine could move suddenly. Never stand at the back of the machine while the engine is running.**
- **Do not remove the radiator cap or the drain plug when the cooling water is hot. Stop the engine and wait until the engine and the cooling water cool. Then, slowly loosen the radiator cap and the drain plug to remove them.**
- **When performing maintenance on the machine, clean up the foot area and strictly observe the following so as not to fall:**
  - **Do not spill oil or grease.**
  - **Do not leave tools scattered around.**
  - **Watch your step when walking.**
  - **Lower the boom so that the attachment rests on the ground.**
- **Never jump down from the machine. Use the steps and handrails when climbing up and down the machine, and always support your body at three points with your hands and feet.**

1. Open the maintenance cover B.

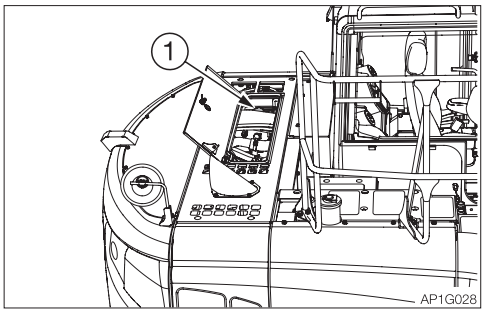

<Low noise package>

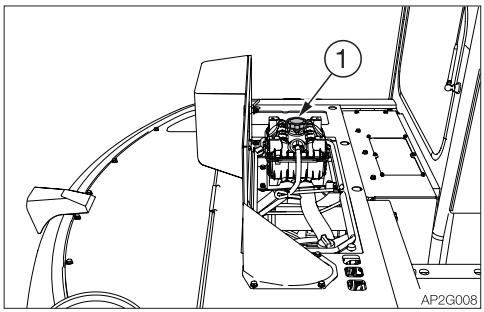

2. Gradually loosen the radiator cap or the expansion tank cap (1) to release the internal pressure, and then remove the cap.

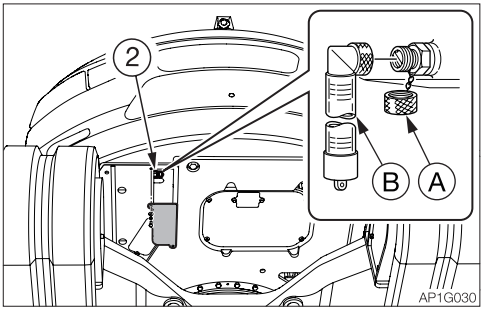

3. Loosen the bolts and open the cover (2).
4. Place a pan for catching the waste coolant under the drain plug (3).
5. Remove the cap (A), install the connector (B), and then drain the coolant. (The coolant comes out when the screw is tightened.)
6. Clean the cooling system, as necessary.
7. Remove the connector (B) and install the cap (A).
8. Take time and slowly add the new coolant (mixture of antifreeze and tap water) to the radiator through the fill port until it is full.
9. Close the radiator cap (1).
10. Warm up the engine. Use the meters to check that there are no irregularities in the cooling system at this time.
11. Increase the water temperature to at least 90°C (194°F). Then, run the engine for about 10 minutes with the thermostat kept open.
12. Stop the engine, wait until the cooling water temperature becomes lower, and then check the level of coolant in the radiator.
    If necessary, add cooling water until the radiator is full.
13. Close the radiator cap (1) and the cover (2).
14. Clean the interior of the reserve tank, and then add coolant to the upper limit (H).
15. When the coolant has been replaced, inspect the coolant level once again after operating the machine.
    When the machine is operated, the coolant is distributed throughout the entire system, resulting in the lower coolant level.
    Add coolant up to the full level.

REPLACING THE AIR CLEANER ELEMENT

⚠ WARNING

Stop the engine and allow the machine to cool down before performing maintenance.

- **The engine, muffler, radiator and many other parts of the machine are hot immediately after the engine is stopped. Touching these parts will cause burns.**

IMPORTANT: Do not use an element if its pleats, gaskets or seals are damaged.
IMPORTANT: Be sure to install the element and dust cap securely. If not, dust could be drain into the cylinder, damaging the engine.

1. Open the left side cover.

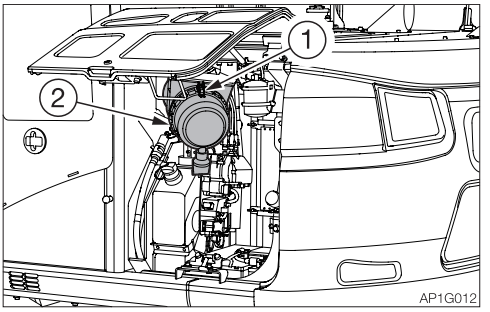

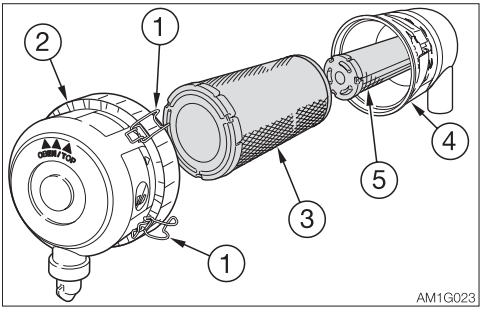

2. Loosen the clamps (1) and remove the dust cup (2).
3. Clean the inside of the dust cup (2).
4. Remove the primary element (3).
5. Clean the inside of the body (4).
6. Remove the secondary element (5).
7. Install the new elements.
8. Install the dust cup (2) with its "▲▲▲ OBEN/TOP" mark facing up, and then fasten it with the clamps (1).

REPLACING THE AIR BREATHER FILTER

⚠ WARNING

- **Stop the engine and allow each part of the machine to cool down before performing maintenance.**
  - **The engine, the hydraulic system and many other parts of the machine are hot immediately after the engine is stopped. Touching these parts will cause burns.**
- **Before performing maintenance on the top of the machine, clean the place you will work on and observe the following to prevent falling.**
  - **Do not spill oil or grease.**
  - **Do not leave tools scattered around.**
  - **Watch your step when walking.**
  - **Lower the boom so that the attachment rests on the ground.**
- **Never jump down from the machine. Use the steps and handrails when climbing up and down the machine, and always support your body at three points with your hands and feet.**
- **Oil may spurt out if caps or filters are removed or pipes are disconnected before releasing the pressure in the hydraulic system.**
  - **Press the air breather button to relieve the internal pressure from the tank.**

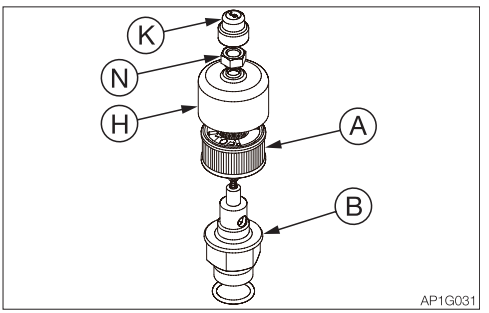

1. Press the button (K) to relieve the internal pressure from the tank.
2. Remove the button (K).
3. Remove the nut (N) by turning it counterclockwise.
4. Remove the cover (H) by turning it counterclockwise.
5. Replace the filter (A) with the “TOP” mark facing up.
6. Install the cover (H) on the body (B) by turning the cover (H) clockwise.
7. Install the nut (N) by turning it clockwise.
8. Install the button (K).

REPLACING THE FUEL FILTERS

⚠ WARNING

- **Do not smoke or permit open flames while handling fuel or working on the fuel system.**
- **Stop the engine in a well-ventilated place and allow it to cool down before performing maintenance.**
- **Clean up spilled fuel immediately.**

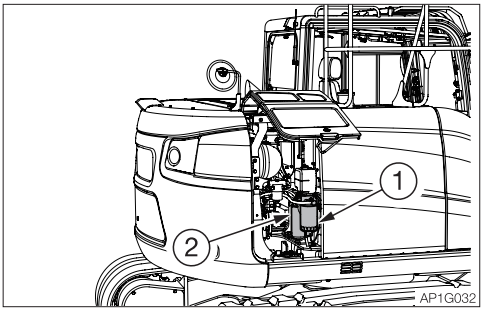

Pre-fuel filter

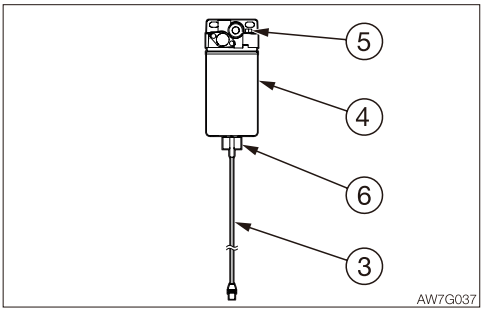

1. Open the right side cover.
2. Remove the electric wiring (3).
3. Place a pan under the pre-fuel filter (1) to catch fuel.
4. Loosen the vent plug (5) and the drain plug (6) to drain the fuel inside.
5. Remove the filter (4) with a filter wrench.
6. Remove dirt from the seal surface of the new filter and its mating surface.
7. Apply a thin layer of fuel on the seal surface of the filter (4), and then turn the filter clockwise to install it.
   Tightening torque: 17 to 18 N·m (12.5 to 13.3 ft-lb)
8. Install the drain plug (6).
   Tightening torque: 1.6±0.3 N·m (1.2±0.2 ft-lb)
9. Install the electric wiring.
10. Bleed air.
    Refer to “Bleeding air from the fuel system” on page 6-11.

Main fuel filter

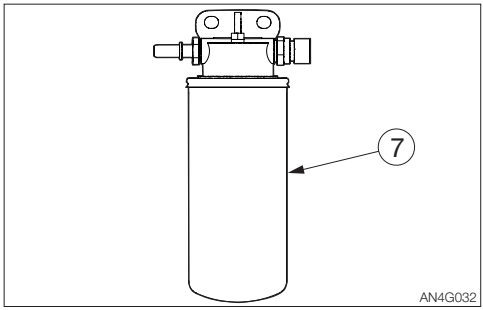

1. Open the right side cover.
2. Place a pan under the main fuel filter (2) to catch fuel.
3. Remove the filter (7) with a filter wrench.
4. Remove dirt from the seal surface of the new filter and its mating surface.
5. Apply a thin layer of fuel on the gasket.
6. Install the filter (7) by turning it clockwise.
   Tightening torque: 10 to 12 N·m (7.4 to 8.9 ft-lb)
7. Bleed air.
   Refer to “Bleeding air from the fuel system” on page 6-11.

REPLACING THE DEF/ADBLUE® SUPPLY MODULE FILTER

Replace the DEF/AdBlue® supply module filter after three-year operation even if the running time is less than 1000 hours.

⚠ WARNING

Follow appropriate laws and regulations when disposing of the removed DEF/AdBlue® solution.

1. Turn the starter switch to the OFF position and wait for two minutes until the SCR system stops.
2. Open the left side cover.

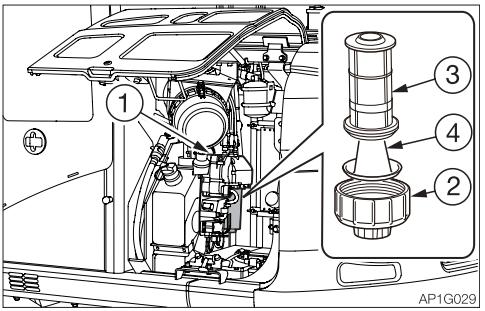

3. Remove the electric wiring from the supply module (1).
   Cover the electric wiring just removed with a plastic bag so that it will not be splashed with the DEF/AdBlue® solution.
4. Place a pan under the cover (2).
5. Remove the cover (2).
   Socket wrench: 27 mm
6. Pull out the filter (3) and the compensation body (4).
7. Set a new filter (3) and a new compensation body (4).
8. Install the cover (2).
   Tightening torque: 22.5±2.5 N·m (16.6±1.8 ft-lb)
9. Install the electric wiring.

INSPECTING AND ADJUSTING THE V-RIB BELT

Check for wear and abnormality. Repair or replace as necessary.
Refer to “Replacing the V-rib belt” on page 5-67.

INSPECTING THE ENGINE INSTALLATION CONDITION

Check for damage or loose bolt. Repair or replace as necessary.
This operation requires experience. Ask a Takeuchi service agent for it.

INSPECTING THE LOW-TEMPERATURE STARTING DEVICE

This operation requires experience. Ask a Takeuchi service agent for it.

EVERY 2000 HOURS

INSPECTING THE ACCUMULATOR

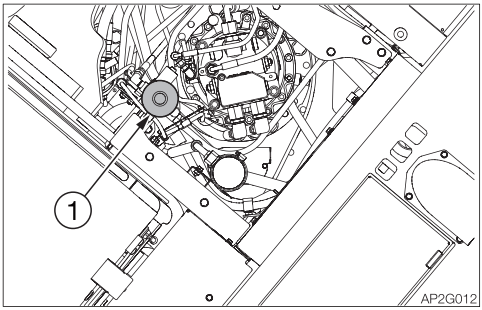

⚠ WARNING

- High-pressure nitrogen gas is enclosed in the accumulator (1). If handled incorrectly, it could explode and cause serious injury. Strictly observe the following precautions:
  - Do not disassemble.
  - Do not allow flame nearby or throw it into a fire.
  - Do not drill, weld or fuse.
  - Do not subject it to physical shock such as hitting, rolling or dropping.
  - Before disposing of the unit, the sealed gas must be drained. Contact a Takeuchi sales or service dealer for help.
- Clear all personnel from the work area.
- Sound the horn to warn people around the machine.

IMPORTANT: If the accumulator (1) fails, the boom cannot be lowered or the residual pressure in the hydraulic circuit cannot be released while the engine is stopped.

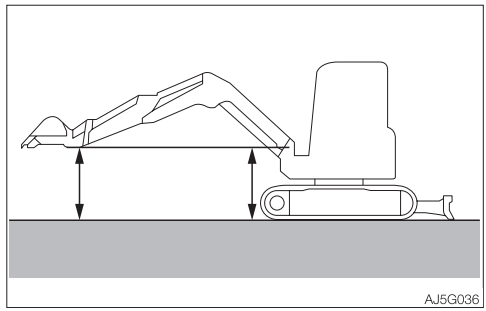

1. Start the engine, then fully retract the arm and bucket cylinders.
2. Operate the boom so that the tip of the arm is positioned at the bottom of the boom.

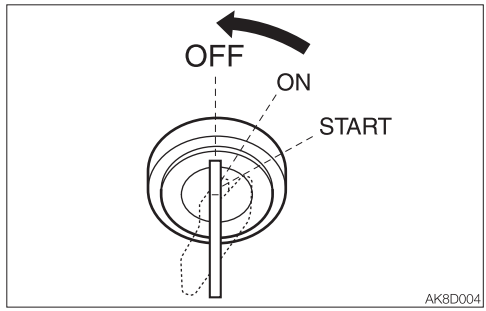

3. Turn the starter key to the OFF position to stop the engine.

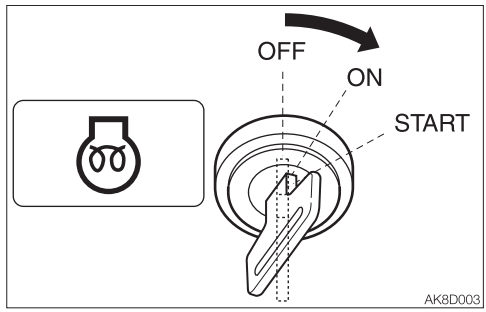

4. Turn the key to the ON position. (Do not start the engine.)

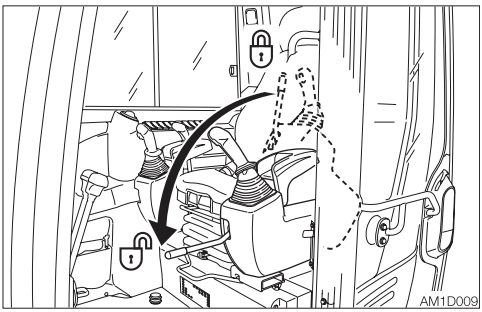

5. Fully lower the safety lock lever to disengage the lock.

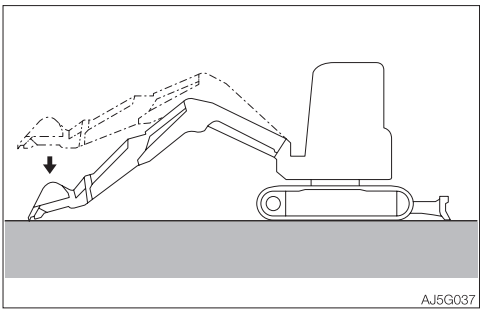

6. Lower the boom until the bucket contacts the ground.
   The machine is normal if the bucket is lowered to the ground. The accumulator (1) is probably faulty if the boom cannot be lowered or stops halfway. Consult a Takeuchi sales or service dealer for help.

Note: When the boom is lowered to lower the bucket to the ground, do it within 10 minutes of stopping the engine.

EVERY 3000 HOURS

REPLACING THE V-RIB BELT

⚠ WARNING

Stop the engine and allow the machine to cool down before performing maintenance.

- **The engine, muffler, radiator, hydraulic lines, sliding parts and many other parts of the machine are hot immediately after the engine is stopped. Touching these parts will cause burns.**
- **When performing maintenance on the machine, clean up the foot area and strictly observe the following so as not to fall:**
  - **Do not spill oil or grease.**
  - **Do not leave tools scattered around.**
  - **Watch your step when walking.**
  - **Lower the boom so that the attachment rests on the ground.**
- **Never jump down from the machine. Use the steps and handrails when climbing up and down the machine, and always support your body at three points with your hands and feet.**

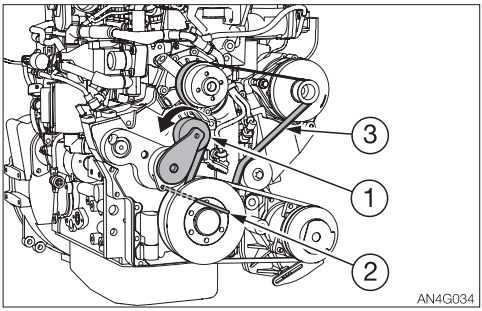

1. Use a wrench to push the tensioning pulley (1) in the direction of the arrow.
2. Secure the tensioning pulley (1) with the pin (2) and replace the V-rib belt with a new one.
3. Remove the pin (2) with the wrench and apply tension onto the V-rib belt (3).
4. Make sure that the V-rib belt (3) is properly seated on the guide of the tensioning pulley (1).

EVERY 4000 HOURS

REPLACING THE HYDRAULIC OIL AND CLEANING THE SUCTION STRAINER

⚠ WARNING

- Stop the engine and allow each part of the machine to cool down before performing maintenance.
  - The engine, the hydraulic system and many other parts of the machine are hot immediately after the engine is stopped. Touching these parts will cause burns.
  - The hydraulic oil is also hot and under high pressure.
    Be careful not to touch the hydraulic oil when loosening the cap or plug. Working on the machine under these conditions could result in burns or injuries due to the hot oil spurting out.
- Before performing maintenance on the top of the machine, clean the place you will work on and observe the following to prevent falling.
  - Do not spill oil or grease.
  - Do not leave tools scattered around.
  - Watch your step when walking.
  - Lower the boom so that the attachment rests on the ground.
- Never jump down from the machine. Use the steps and handrails when climbing up and down the machine, and always support your body at three points with your hands and feet.
- Oil may spurt out if caps or filters are removed or pipes are disconnected before releasing the pressure in the hydraulic system.
  - Press the air breather button to relieve the internal pressure from the tank.
  - When removing plugs or screws, or when disconnecting hoses, stand to the side and loosen them slowly to gradually release the internal pressure before removing.

1. Slew 90° clockwise and set the machine to the hydraulic oil level inspection posture.
   Refer to “Inspecting the hydraulic oil tank level and replenishing” on page 5-28.

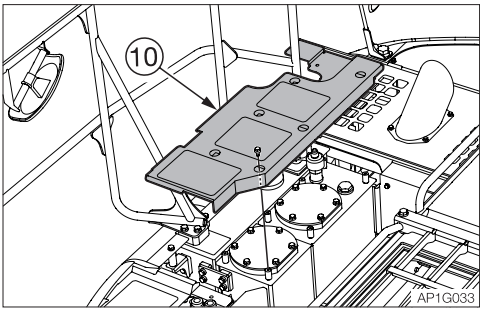

2. Press the button (2) to relieve the internal pressure from the tank.
3. Remove the cover (10).

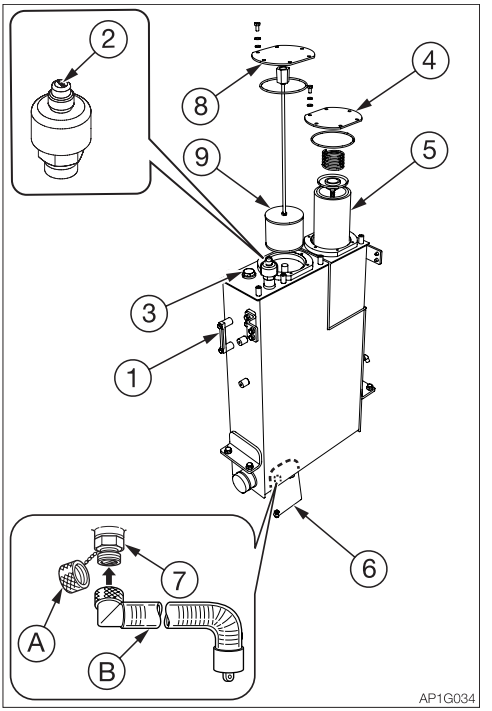

4. Remove the plug (3).
5. Loosen the bolts and remove the under cover (6).
6. Place a pan under the plug (7) to catch the waste oil.
7. Remove the cap (A), install the connector (B), and then drain the hydraulic oil. (The oil comes out once the screw is tightened.)
8. Loosen the bolts and remove the flange (4).
9. Remove the return filter (5).
10. Loosen the bolts and remove the flange (8).
11. Remove the suction strainer (9) and clean it.
12. Clean the inside of the hydraulic oil tank.
13. Install the suction strainer (9) on the tank and then install the flange (8).
14. Install the new return filter (5) and the flange (4) on the tank.
15. Remove the connector (B) and install the cap (A).
16. Add hydraulic oil from the hole of plug (3) up to the level between the upper limit (H) and the lower limit (L) in the sight gauge (1).
17. Tighten the plug (3).
18. Bleed air from the hydraulic oil circuit following “Bleeding air” below.
19. Set the machine to the hydraulic oil level inspection posture and inspect the oil level after the oil cools.
    Refer to “Inspecting the hydraulic oil tank level and replenishing” on page 5-28.
20. Install the under cover (6).

Bleeding air

IMPORTANT: After replacing the hydraulic oil or hydraulic devices, or after performing maintenance of the hydraulic devices, bleed air from the hydraulic circuits and hydraulic devices. Failure to do so may damage the hydraulic devices.

• Hydraulic pump

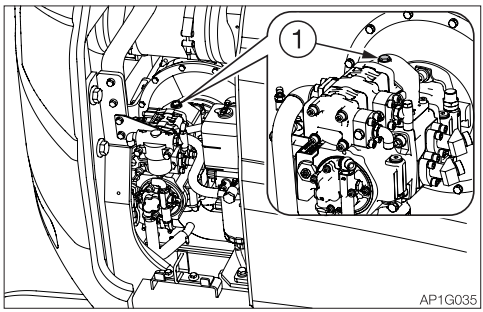

1. Open the right side cover.
2. Loosen the vent plug (1) on the hydraulic pump.
3. Once hydraulic oil overflows from the vent plug hole (1), tighten the vent plug (1).

If the boom or arm does not move normally, air may be present in the following locations. This operation is dangerous and requires experience. Ask your sales or service dealer for help.

• Emergency shut-off valve

1. Place a pan under the hose (A) or (B) to catch the waste oil.
2. Start the engine and run it at low idle.
3. Fully lower the safety lock lever to the unlock position.

Boom

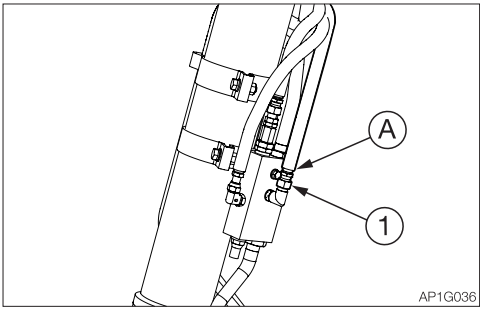

2-Piece boom (Second boom)

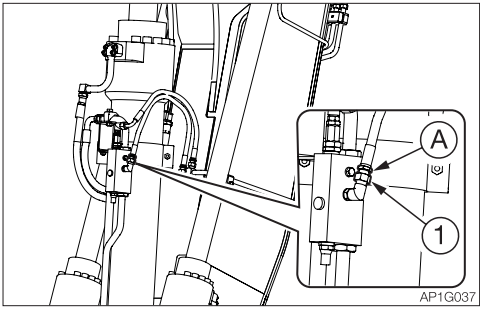

4. Hold the hose fitting (A) in place with a wrench and slowly loosen the hose nut (1).
5. Slowly move the boom in the “Boom lower” direction a little until there are no more air bubbles coming from the hose nut (1) joint.
6. Hold the hose fitting (A) in place with a wrench and tighten the hose nut (1).
   Tightening torque: 50 N·m (36.9 ft-lb.)

Arm

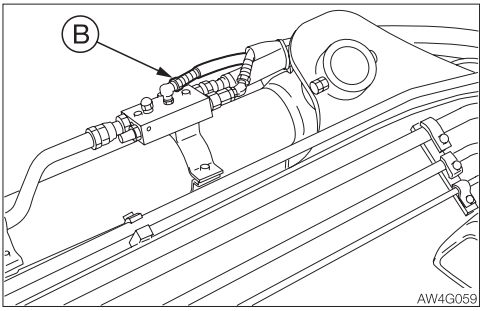

4. Loosen the hose (B) slowly.
5. Slowly move the arm in the “Arm in” direction a little until there are no more air bubbles coming from the hose (B) joint.
6. Tighten the hose (B).
   Tightening torque: 50 N·m (36.9 ft-lb.)

• Slew motor and cylinders

1. Start the engine, let it run at a low-idling speed for 10 minutes.
2. Maintain the engine at low idle, then extend and retract each cylinder 4 or 5 times, without letting them reach the stroke end.
3. Slew slowly left and right several times.
4. Run the engine at high speed, then extend and retract each cylinder 4 or 5 times, without letting them reach the stroke end.
5. Slew left and right several times.
6. Return the engine speed to low idle, then extend and retract each cylinder 4 or 5 times to the stroke end.

WHEN REQUIRED

REPLACING THE BUCKET TEETH AND THE SIDE CUTTERS

Replace the bucket teeth if the tooth points are worn. Do not wait until the bucket is damaged.

⚠ WARNING

- **Before performing maintenance or repairs under the machine, lower all moveable working equipment to the ground or in the lowermost position.**
- **To prevent unexpected movement, firmly secure the working equipment when repairing or replacing the bucket teeth or side cutter.**
- **When using a hammer, pins may fly out or metal particles may be scattered. This may lead to serious injury.**
  - **If hard metal parts such as pins, bucket teeth, side cutter or bearings are hit with a hammer, wear protective gear such as safety goggles and gloves.**
  - **When hitting pins or bucket teeth, always check that there is no one in the surrounding area.**
- **Do not allow unauthorized personnel in the work area while working.**

Removing

1. Clean the bucket and park the machine on a flat and rigid ground.

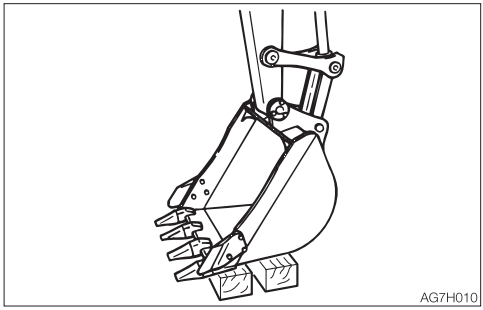

2. Place the bucket with its bottom flat on the blocks so that the locking pin can be knocked out.
3. Remove the key, and then check that the bucket is stable.

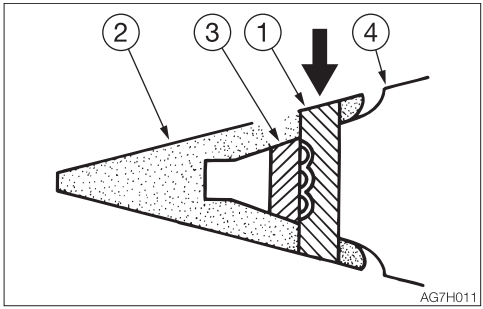

4. Knock out the locking pin (1) and remove the point (2).

Note: If the drift is set against rubber pin lock (3) when it is hit, the rubber pin lock may break. Set it against the back of the locking pin.

5. Remove the rubber pin lock (3). Check if the rubber pin lock is still usable. Replace it if it is as follows.

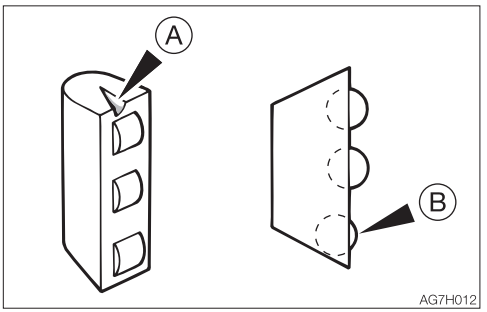

A .....There are cracks in the rubber and the roller is coming off.
B .....The roller is dented when pressed with a finger.

Installation

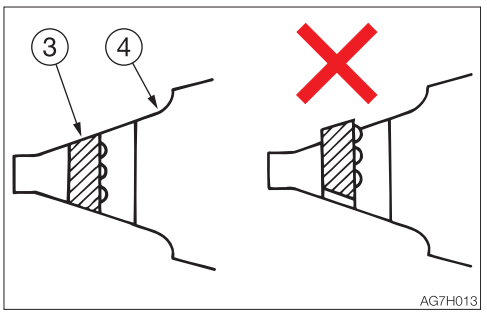

1. Remove the dirt on the surface of adaptor and the inner part of tooth, make the better contact on the mating part.
2. Push rubber pin lock (3) into the welding adaptor (4).
   Do not let the rubber pin lock stick out from the welding adaptor surface.

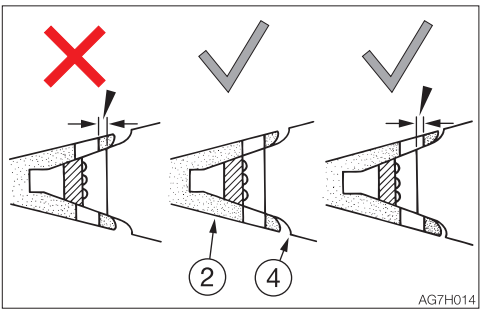

3. Install the point (2) onto the welding adaptor (4).
   Insert the point so that the surface behind the point's pin hole is aligned with the surface behind the welding adapter's pin hole.

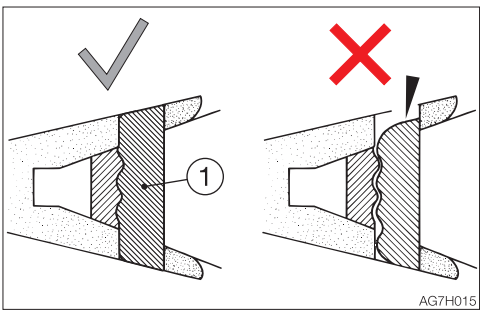

4. Knock out the locking pin (1).
   Check that the end surfaces of the locking pin just knocked out are aligned with the upper and lower surface of the point. Do not use the worn locking pin.
   The life of the teeth can be lengthened and the frequency of its replacement can be reduced by turning it upside down so that it will wear evenly.
   Replace the rubber pin lock and locking pin at the same time as replacing the teeth. This makes it possible to prevent the teeth from falling out.

• Side cutter
Installation

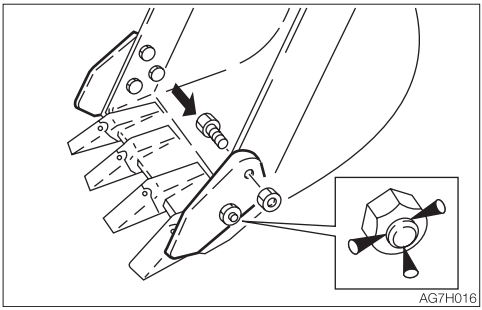

1. Insert the bolts from the inner of the bucket and tighten the side cutter with nuts.
   Tightening torque: 475 N·m (350 ft-lb.)
2. Caulk the bolts with a punch at three spots along the periphery of the screw to prevent the nuts from coming loose.

REPLACING THE BUCKET

⚠ WARNING

- Before performing maintenance or repairs under the machine, lower all working equipment to the ground or in the lowermost position.
- If maintenance must be performed with the engine running, always work as a two person team communicating each other.
  - One person must sit in the operator's seat so that he/she can immediately stop the engine when necessary. He/she must take care not to touch the lever or pedal unless necessary.
  - The one who performs maintenance must make sure to keep his/her body or clothing away from the moving part of the machine.
- When using a hammer, pins may fly out or metal particles may be scattered. This may lead to serious injury.
  - If hard metal parts such as pins, bucket teeth, side cutter or bearings are hit with a hammer, wear protective gear such as safety goggles and gloves.
  - When hitting pins or bucket teeth, always check that there is no one in the surrounding area.
- When aligning the pin holes, always do so by checking them visually. Do not insert your finger in the pin hole, or you could lose your finger.

Removing

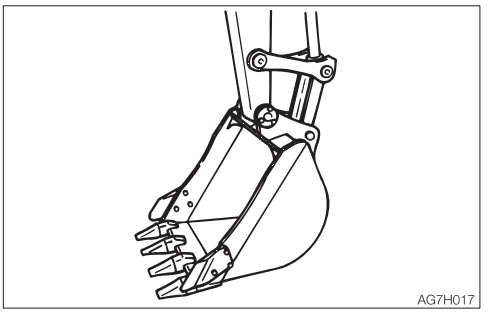

1. Lower the bucket to the ground as shown on the figure above in a stable position.

Note: When removing pins, set the bucket so that it is barely touching the ground. If the bucket is firmly touching the ground, the resistance will be great and it will be difficult to remove the pin.

2. Set the safety lock lever to the locked position and stop the engine.

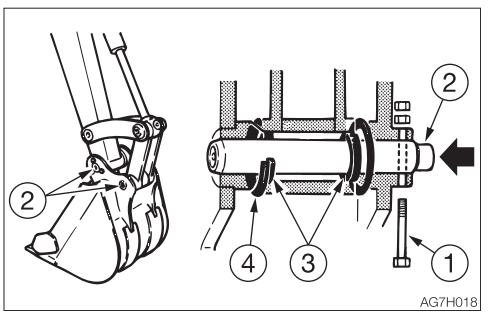

3. Remove the bolt (1).
4. Hammer the pin (2) out of the bucket.
5. Remove the bucket.
   Inspect the pin seal (3) and replace it if it is deformed or damaged. (See next page.)

Installation

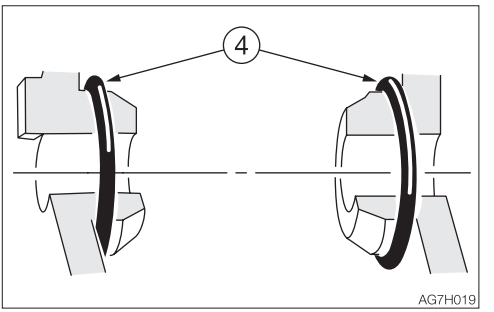

1. Set the O-ring (4) on the bucket as shown on the figure above.

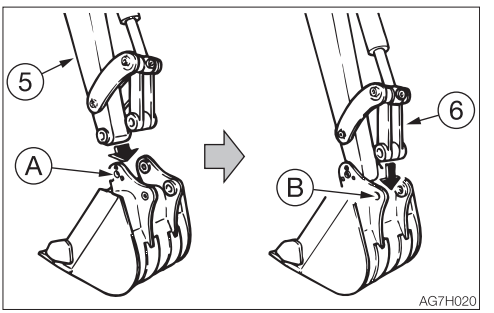

2. Align the pin hole (A) on the bucket with the pin hole on the arm (5), and install the pin (2).
3. Operate the cylinder, align the pin hole (B) on the bucket with the pin hole on the link arm (6), and install the pin (2).

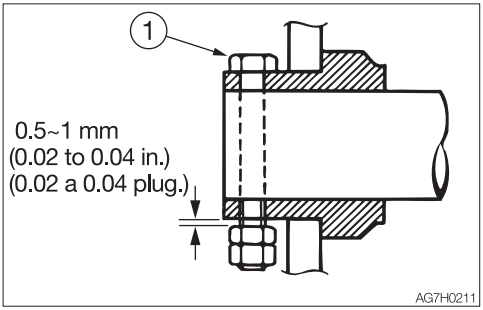

4. Align the turn prevention holes, and then install the bolt (1) and the nut. Be sure to leave a gap of about 0.5 to 1 mm (0.02 to 0.04 in.) between the nut and bucket bush, or the nut will come loose.

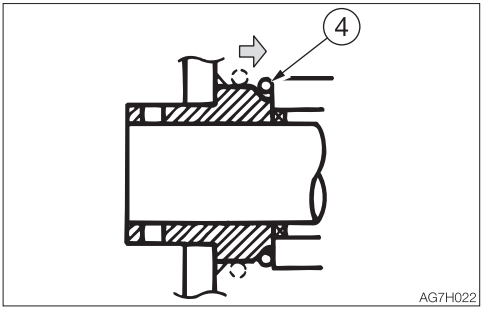

5. Adjust the gap between the bucket and the arm.
   Refer to “Adjusting the gap between the bucket and arm (If equipped)” on page 5-76.
6. Slide the O-ring (4).

Replacing the pin seal

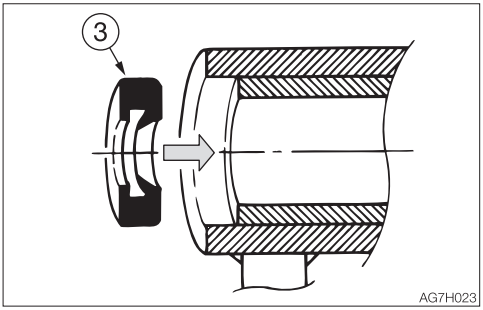

1. Set the pin seal (3) in the direction shown on the figure above.
2. Use a mallet to slowly press the pin seal in. Be careful not to damage the seal.

ADJUSTING THE GAP BETWEEN THE BUCKET AND ARM (IF EQUIPPED)

⚠ WARNING

- **Before performing maintenance or repairs under the machine, lower all working equipment to the ground or in the lowermost position.**
- **To prevent unexpected movement, securely block the working equipment when adjusting the gap.**

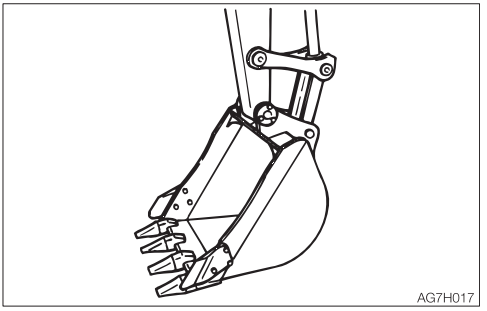

1. Lower the bucket to the ground in a stable position as shown in the figure above.
2. Slew the upperstructure slightly to the left and lightly press the arm to the left side of the bucket (the side without an adjuster).
3. Set the safety lock lever to the lock position and stop the engine.

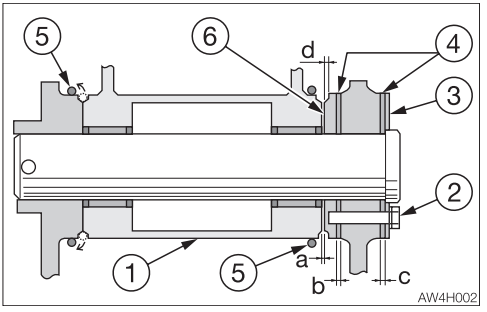

4. Slightly loosen the 3 bolts (2) (using a 22 mm (0.87 in) wrench) and remove the shims (4) from “gap c” between the blade (3) and bucket. The shims (4) are in two parts and can be removed easily when the bolts are slightly loosened by sticking a screwdriver in the seam between the left and right shims.
5. Move the O-ring (5) to bring the gap (a) into view and measure the width of the gap (a).

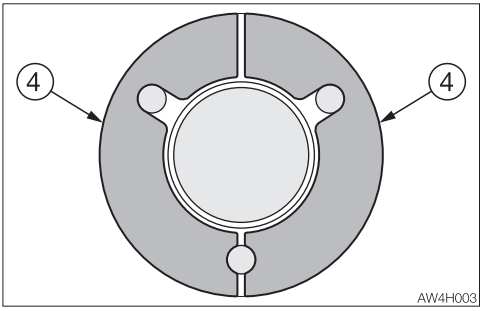

6. Press the head of the bolts (2) with a finger to eliminate gap (a). This increases gap (b). Insert the shims removed above into gap (b), using as many shims as can be inserted easily.
7. Set the remaining shims back in gap (c), then tighten the bolts.
   Tightening torque : 83 N·m (61.5 ft-lb).
   This completes the adjustment.

Note: The proper total number of shims for gaps (b) and (c) is 6 x 2 = 12. If you forget to set the shims remaining in step 7 above back in gap (c), the tip of bolts (2) will extend past the boss (6). This may damage the boss at the arm’s tip or cause the bolt to break. If the end face of boss (6) wears and the width of the groove (d) for the O-ring reaches 5 mm (0.2 in), replace boss (6) with a new one.

INSPECTING AND REPLENISHING THE WINDSHIELD WASHER FLUID

⚠ WARNING

Choose ethyl alcohol as washer solution. Do not use methyl alcohol as washer solution. It could damage the eyes.

Use a windshield washer fluid designed specifically for motor vehicles. Follow the instructions included with the washer fluid.

Inspection

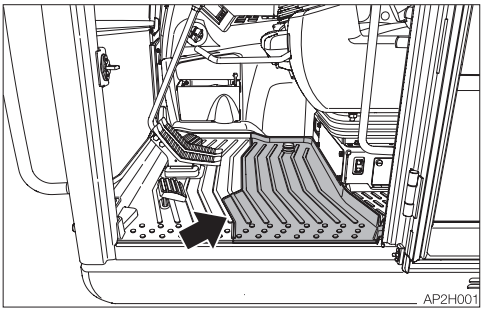

1. Remove the floor mat.

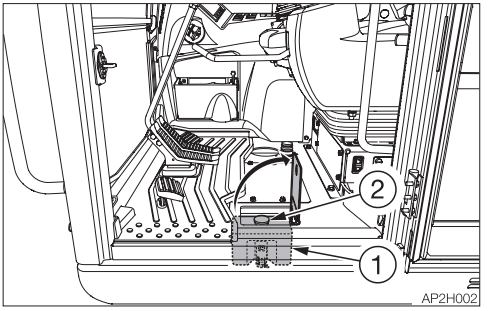

2. Open the cover.
3. Inspect the washer tank (1) and add washer fluid if the level is low.

Replenishing

1. Mix the washer fluid to the prescribed concentration.
2. Remove the cap (2) and add washer fluid. Keep the dust away while replenishing the washer fluid.
3. Install the cap (2).

LUBRICATING THE LEVERS AND PEDALS

⚠ WARNING

Set the machine to the parking posture, stop the engine, remove the starter key and store it. Failure to do so may result in the machine moving abruptly, leading to serious injury or death.

If the levers or pedals no longer move smoothly, grease them.

Operating levers

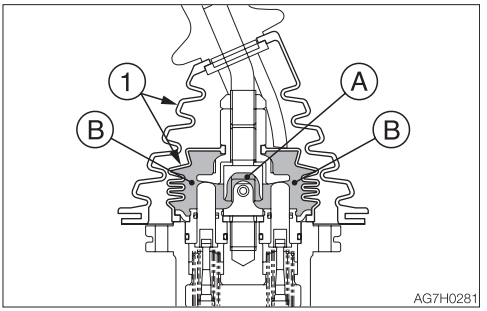

Travel levers/pedals

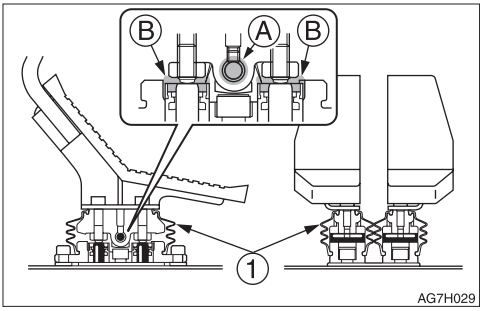

Dozer blade lever

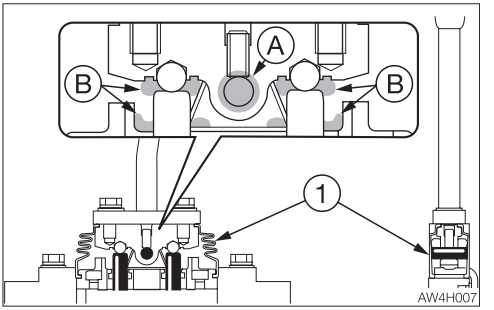

1. Remove the lower mount section of the boot (1) and turn it upward.
2. Wipe off the old grease.
3. Apply grease to points (A) and (B).
4. Set the boot (1) back as it was.

INSPECTING THE RUBBER CRAWLERS

Repair or replace the rubber crawlers if their condition becomes as described below. Consult your sales or service dealer for repair or replacement.

Rubber crawler
Replace the crawler if the entire crawler is stretched and cannot be adjusted.

(1) Lug

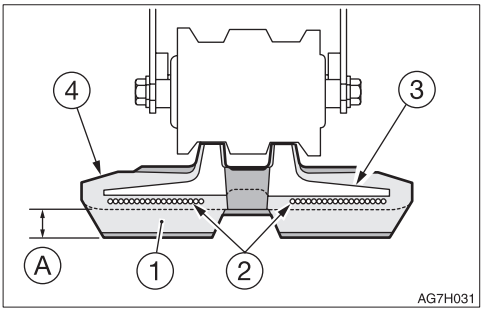

Replace if the height of (A) is 5 mm (0.2 in.) or below.

(2) Steel cord

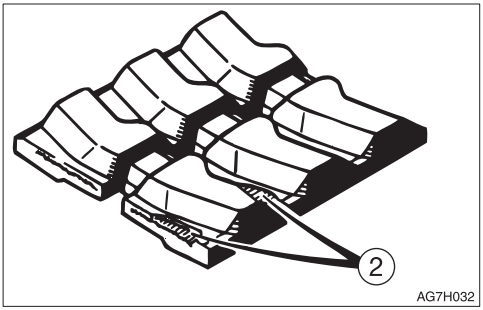

Replace if the steel cord is exposed for two links or more.
Replace if the half or more of the steel cords on one side are cut.

(3) Metal core

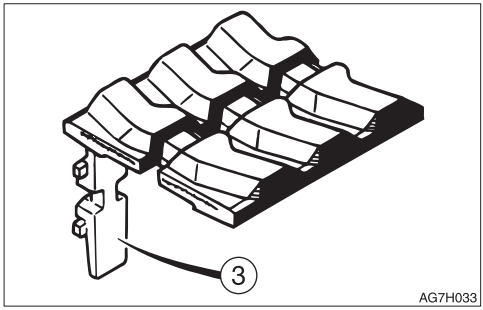

Replace if even one metal core is off.

(4) Rubber

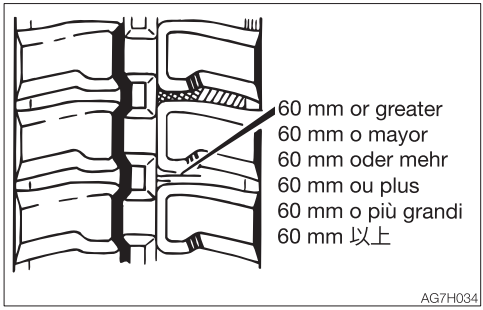

Repair if there are cracks of 60 mm (2.4 in.) or greater in length.
If the steel cord is visible, repair as soon as possible, regardless of the length of the crack.

REPLACING THE RUBBER CRAWLERS

⚠ WARNING

- **If you must work beneath the raised machine or working equipment, always use wood blocks, jack-stands or other rigid and stable supports. Never get under the machine or working equipment if they are not sufficiently supported.**
- **If maintenance must be performed with the engine running, always work as a two person team communicating each other.**
  - **One person must sit in the operator's seat so that he/she can immediately stop the engine when necessary. He/she must take care not to touch the lever or pedal unless necessary.**
  - **The one who performs maintenance must make sure to keep his/her body or clothing away from the moving part of the machine.**

Removal

1. Fully release the tension of the rubber crawler.
   Refer to "Inspecting and adjusting the crawler tension" on page 5-40.

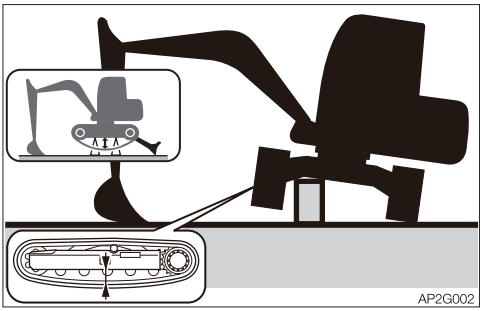

2. Use the working equipment to lift the body.

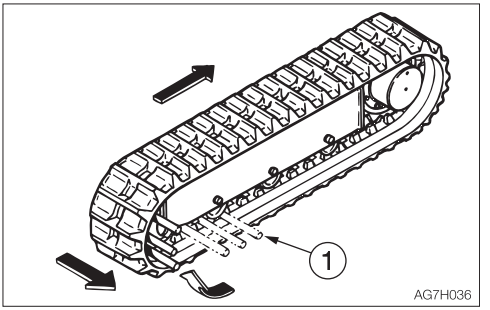

3. Set an iron pipe (1) in the rubber crawler and turn the sprocket slowly in the reverse direction.
4. Turn until the iron pipe (1) is directly next to the idler and the rubber crawler lifts away from the idler, then stop turning the sprocket.
5. Slide the rubber crawler sideways and remove it from the crawler frame.
   Remove the other rubber crawler using the same procedure.

Installation

1. Use the working equipment to lift the body.

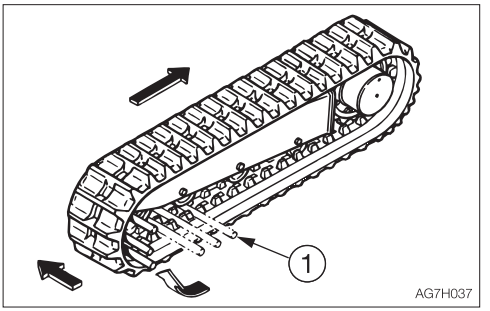

2. Set the rubber crawler on the sprocket.
3. Set an iron pipe (1) in the rubber crawler and turn the sprocket slowly in the reverse direction.
4. Turn until the iron pipe (1) is directly next to the idler and the rubber crawler lifts away from the idler, then stop turning the sprocket.
5. Slide the rubber crawler inward, engage it on the idler, then pull out the iron pipe.
6. Check that the rubber crawler is securely engaged on the sprocket and idler.
7. Tighten the rubber crawler to the standard tension.
   Refer to “Inspecting and adjusting the crawler tension” on page 5-40.
8. Install the other rubber crawler using the same procedure.

REPLACING THE DIESEL PARTICULATE FILTER <APPLICABLE MACHINE MODELS 514900333 OR LATER>

The DPF must be replaced if the ash lamp lights up or flashes. Refer to “16. Standstill regeneration in process/Demand indicator lamp/Ash lamp” on page 2-24.
This operation requires experience. Ask a Takeuchi service agent for it.

EVERY 2 YEARS

REPLACING THE RECEIVER DRYER

This operation requires experience. Ask your sales or service dealer for it.

MAINTENANCE DURING EXTENDED STORAGE PERIOD

STORAGE PROCEDURES

If the machine is to be stored for 30 days or more, store it indoors. If it must be stored outdoors, park the machine on a surface laid with lumber on a flat ground, and place a waterproof cover over it so that it stays dry.

1. Clean the machine.
2. Inspect for oil leakage, water leakage, cracks and loose nuts and bolts.
3. Add fuel and replace the hydraulic oil and oil.
4. To prevent the DEF/AdBlue® solution from evaporating, fill up the DEF/AdBlue® tank.
5. To prevent rusting and freezing, replace the engine coolant with long-life coolant (LLC).
   Refer to “Replacing the engine cooling system” on page 5-59.
6. Use the grease gun to lubricate the grease fittings.
7. Fully retract the bucket and arm cylinders and lower the bucket and dozer blade to the ground.
8. Apply rust-inhibiting oil to the hydraulic cylinder rods.
9. Disconnect the negative cable from the battery and cover the battery to prevent freezing.

IMPORTANT: The SCR system operates for up to 2 minutes after the starter switch is turned to the OFF position.
When removing the batteries or electrical connectors for inspection or maintenance, wait for at least 2 minutes after the starter switch is turned to the OFF position. Otherwise, the system could fail.

During storage

⚠ WARNING

- **Do not operate the machine in an enclosed area without adequate ventilation.**
- **If natural ventilation is not possible, install ventilators, fans, exhaust extension pipes or other venting devices.**

1. To prevent rusting, operate the machine once a month so that the oil can be circulated throughout the system.
2. Inspect the battery and recharge it as necessary.
   Ask your sales or service dealer for recharging.

Starting the machine after storage

IMPORTANT: If the above “Storage procedures” have not been followed during the extended storage periods, consult your sales or service dealer before starting the machine again.

1. Wipe off the rust-inhibiting oil that was applied on the piston rods of the hydraulic oil cylinders.
2. Add oil or grease as necessary.
3. If the storage period has been four months or more, replace DEF/AdBlue®. There is a risk that the SCR system may malfunction; contact a Takeuchi service dealer for assistance.

Returning the engine to service

1. Perform the daily checks.
2. The engine should be pre-oiled before startup.
   a. Crank the engine, leaving the fuel system shut off so the engine will not start, for 15 seconds.
   b. Then pause for 30 seconds.
   c. Repeat the procedure until you have cranked the engine for a total of one minute. This will circulate the oil in the engine's lubrication system.
3. Prime the fuel system.
4. Start the engine. Allow the engine to idle for approximately 15 minutes while you check for:
   · Proper oil pressure
   · Fuel, engine oil or coolant leaks
   · Proper operation of the indicators and/or gauges
5. Avoid prolonged operation at minimum or maximum engine speeds and loads for the remainder of the first hour of operation.

TROUBLESHOOTING



SYMPTOMS THAT ARE NOT MALFUNCTIONS

The symptoms listed below are not malfunctions.

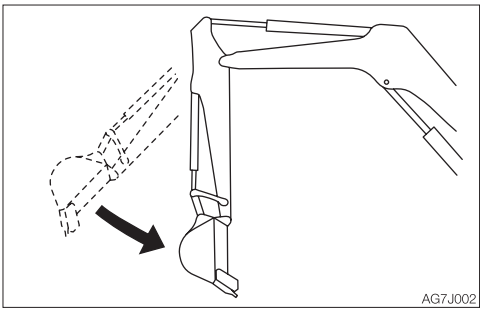

- The arm retracting speed momentarily slows down when it reaches an almost vertical position while the engine is running at low speed.

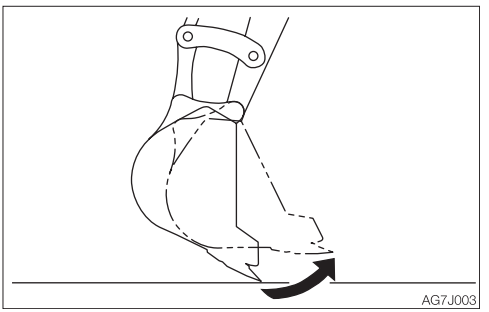

- The bucket teeth moving speed momentarily slows down when it reaches an almost horizontal position while the engine is running at low speed.
- The slew motor produces noise at the beginning and end of the slewing.
- The travel motor produces noise when stopped suddenly from its high speed traveling.
- The control valve produces noise if excessive force is applied to the working equipment or when it moved to the stroke end.
- It becomes less easy to operate the machine when an attachment weighing more than a standard arm or bucket is installed.

IF THE ENGINE OVERHEATS

⚠ WARNING

- **Do not open the engine hood when steam is coming from it. The steam or hot water may spurt out and cause burns.**
- **Do not try to remove the radiator cap or the drain plug when the cooling water is hot. Stop the engine, wait until the engine and the radiator cool, and then slowly loosen the radiator cap to release the internal pressure.**
- **Before performing maintenance, stop the engine and allow the machine to cool down.**

The symptoms listed below indicate overheating.

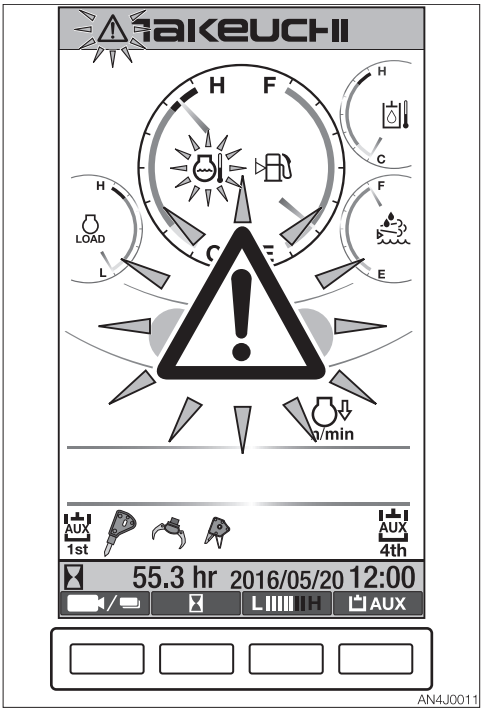

- An alarm is sounded and the vehicle and engine emergency lamp and the coolant temperature warning lamp start flashing.
- The water temperature gauge level is in the red zone.
- Steam comes from the engine room.

Remedy procedure

1. Park the machine in a safe place.
2. Check if steam is coming out of the closed engine hood.
3. If there is steam, stop the engine immediately and contact your sales or service dealer for repair. If steam, is not coming out run the engine at low idle and let the water temperature cool down.
4. When the water temperature gauge LED drops in the green zone, stop the engine.
5. Perform the inspections and the remedies listed below once the engine cools down.
   - V-rib belt slack ..... Adjust
     Refer to page 5-67.
   - Coolant level ..... Add
     Refer to page 5-22.
   - Water leakage ..... Repair
   - Radiator fins..... Clean
     Refer to page 5-49.
   - Sediment in cooling system ..... Clean
     Refer to pages 5-59 to 5-60.

If the problem persists after the above remedies, contact your sales or service dealer for repair.

IF THE BATTERY GOES DEAD

The symptoms below indicate that the battery is dead.
- The starter motor does not turn or fails to start the engine.
- The horn is too weak.

Remedy procedure

Start the engine using the booster battery on the other vehicle (booster vehicle) and the jumper cables.

⚠ WARNING

- **When starting the engine using the jumper cables, be sure to connect the cables by following the proper steps. Improper use of jumper cables can result in battery explosion or unexpected machine motion.**
  - **Do not allow the booster vehicle and the machine with a dead battery (dead machine) to touch each other.**
  - **Do not allow the positive (+) and the negative (–) clips of the jumper cables to touch each other.**
  - **When connecting, attach the jumper cable to the positive (+) terminals first. When disconnecting, remove the cable from the negative (–) terminal (ground) first.**
  - **Connect the last clip of the jumper cable to a point as far away from the battery as possible.**
- **Always wear the protective goggle when jump starting the engine by using the jumper cables.**

IMPORTANT: Use the jumper cables and clips of a size suited to the capacity of battery. Do not use damaged or corroded jumper cables and clips.
IMPORTANT: Be sure that the battery of the booster vehicle has the same capacity as the battery of the dead machine.
IMPORTANT: Be sure to connect the clips securely.

Connecting the jumper cables

IMPORTANT: Set the starter keys of the booster vehicle and the dead machine to the OFF position.

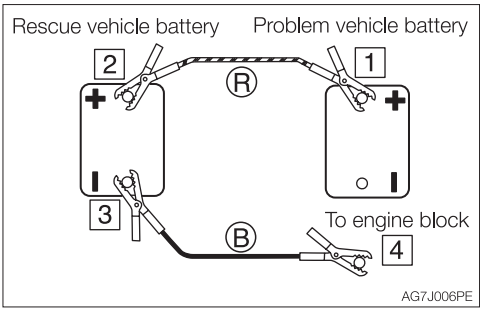

1. Connect the clip of jumper cable (R) to the positive (+) battery terminal of the dead machine.
2. Connect the other clip of jumper cable (R) to the positive (+) battery terminal of the booster vehicle.
3. Connect the clip of jumper cable (B) to the negative (–) battery terminal of the booster vehicle.
4. Connect the other clip of jumper cable (B) to the engine block of the dead machine. Connect the clip to a place as far from the battery as possible.

Starting the engine

1. Check that the clips are securely connected to the terminals.
2. Start the engine of the booster vehicle and run it at high speed.
3. Start the engine of the dead machine.

Disconnecting the jumper cables

Once the dead machine is successfully running, remove the jumper cables by following the same steps as for connection in the reverse order.

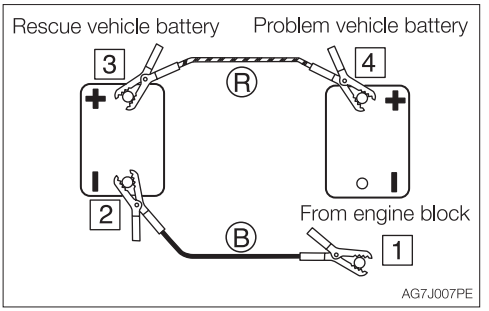

1. Disconnect the clip of jumper cable (B) from the engine block of the dead machine.
2. Disconnect the other clip of jumper cable (B) from the negative (–) battery terminal of the booster vehicle.
3. Disconnect the clip of jumper cable (R) from the positive (+) battery terminal of the booster vehicle.
4. Disconnect the clip of jumper cable (R) from the positive (+) battery terminal of the dead machine.

Recharging

Ask your sales or service dealer for recharging the dead battery.

MEMO

IF A FUSE BLOWS

If a light does not come on or the electrical system does not work, a fuse may be blown. Inspect the fuses.

INSPECTING AND REPLACING THE FUSE

⚠ WARNING

If the fuse blows again soon after replacement, then the electric system is likely faulty. It may pose a fire hazard if not properly repaired. Contact your sales or service dealer for advice.

1. Turn the starter key to the OFF position to stop the engine.

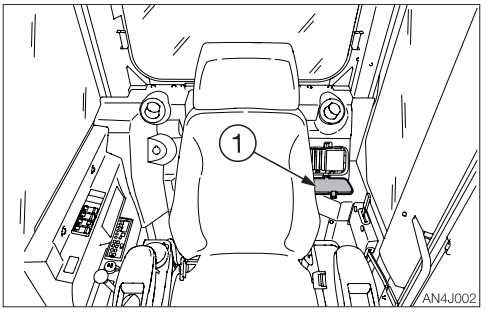

2. Open the fuse box cover (1).
3. Inspect for blown fuses.

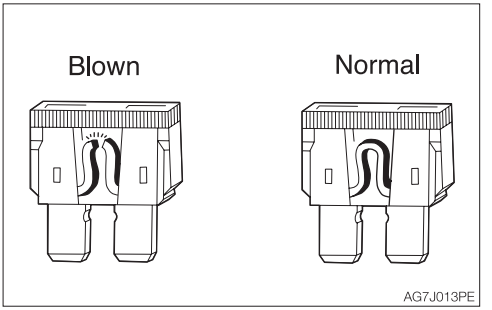

4. If a fuse is blown, replace it with a spare fuse of the same capacity.

Fuse layout and circuits protected

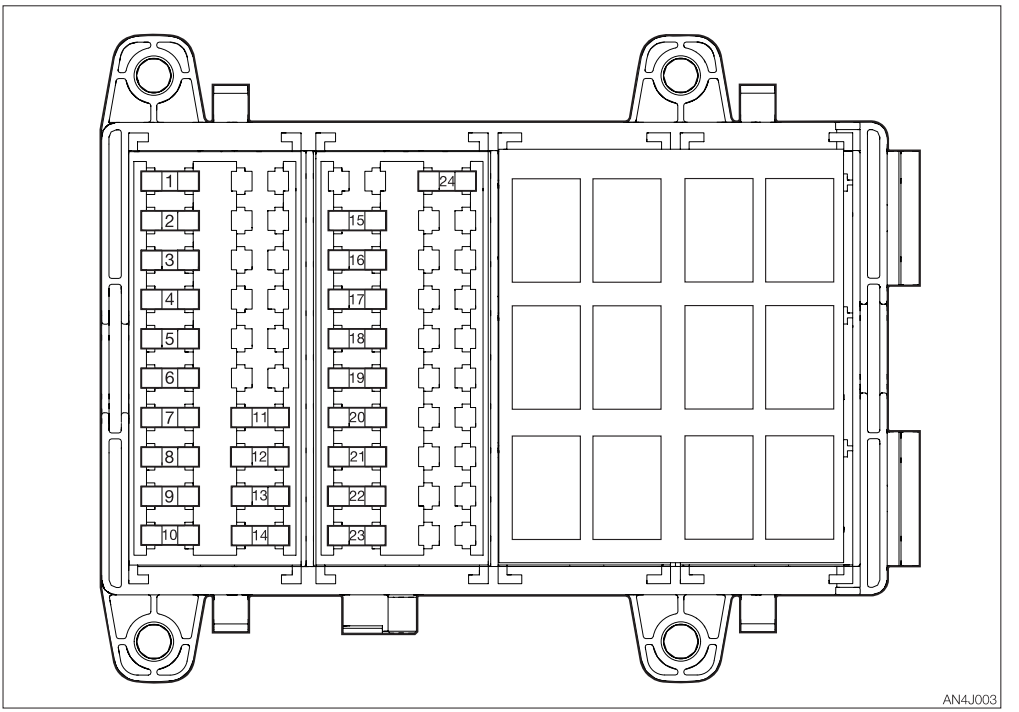

No.	Capacity	Symbol	Protected circuit	Fuse No.
1	25A		Fan switch	F10
2	10A		Air conditioner switch	F9
3	15A	OPT (2)	Option (2)	F8
4	15A	OPT (1)	Option (1)	F7
5	25A	CAB	Cab	F6
6	10A		Display	F5
7	10A		Controller, travel alarm	F4
8	20A		Safety lock lever	F3
9	10A		Wiper	F2
10	20A		Lights	F1
11	5A	OPT (12V)	Option (12V)	F14
12	15A		NOx sensor	F13

No.	Capacity	Symbol	Protected circuit	Fuse No.
13	5A		DEF sensor	F12
14	3A		Immobilizer	F11
15	15A		Controller	F29
16	10A		Display	F28
17	3A		Immobilizer	F27
18	25A		Fuel supply pump	F26
19	30A		ECU	F25
20	20A		Feed pump	F24
21	30A		SCR system	F23
22	10A		Starter switch	F22
23	10A		Horn	F21
24	10A	OPT (12V)	Option (12V)	F40

INSPECTING THE FUSIBLE LINK

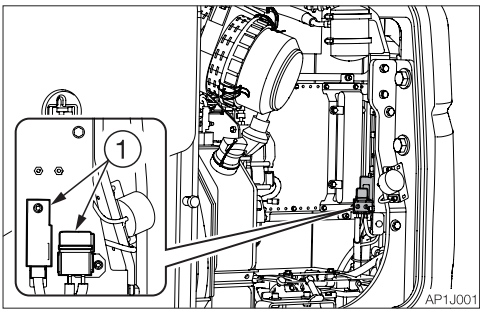

If the machine is not turned on after turning the starter switch to the ON position, the cartridge type fusible link (1) is likely blown. Open the left side cover for inspection. If the fusible link is blown, contact your sales or service dealer.

Note: Fusible links are large type fuses used in high current applications. Like a regular fuse, they act as fuses by protecting the electric components and wirings from damage caused by excessive current draw.

RESTARTING AFTER ADDING FUEL

BLEEDING AIR FROM THE FUEL SYSTEM

IMPORTANT: NEVER use the starter motor to crank the engine in order to prime the fuel system. This may cause the starter motor to overheat and damage the coils, pinion gear and/or ring gear.
IMPORTANT: If the engine stalls due to fuel shortage, add fuel, turn the key to the ON position for 60 seconds, and then turn it to the START position. Running the starter for a long time before there is enough fuel is going through can cause the starter to fail.

1. Add fuel.

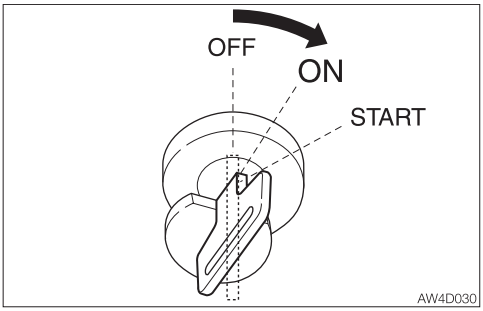

2. Turn the starter switch to the ON position and hold it there for 20 seconds.
   Air is released from the pump during this period.
3. Turn the starter switch to the OFF position, and then to the ON position. Hold it there for 20 seconds again.
   Repeat this step at least twice until air is completely released.

Note: Air in the fuel system causes the engine to fail to start or to have other problems. Always bleed air when the fuel tank is emptied or when there is air in the fuel system.

RESTARTING WHEN THE DEF/ ADBLUE® LEVEL IS LOW OR THE TANK IS EMPTY

1. Turn the starter switch to the OFF position.
2. Refill the DEF/AdBlue® tank
3. Perform the warm-up operation until the warning lamp goes out.
4. If the warning lamp does not go out, turn the starter switch to the OFF position, and then restart the machine.

IF A WARNING LAMP FLASHES

If an alarm is sounded or a warning lamp starts flashing during operation, park the machine in a safe place and perform the remedy procedures described below.

Warning lamp	Lamp name	Causes and remedies
 AW4J0041	**ECM error warning lamp**	There is a problem in the engine. If an error code is displayed on the multi-information display, inform your sales or service dealer of the code and ask for help. Refer to “Multi-information display” on page 2-20 to 2-50. Refer to “Engine error code list” on pages 6-18 to 6-33.
 AN4J005	**Engine stop request warning lamp**	
 AW4J007	**Vehicle and engine emergency lamp**	There is a problem in the machine. Refer to the respective warning lamp below. Get the vehicle or engine error code number from the multi- information display and consult your sales or service dealer referring to the number on the “Vehicle error code list” or “Engine error code list”. Refer to “Multi-information display” on page 2-20 to 2-50. Refer to “Vehicle error code list” on pages 6-16 and 6-17. Refer to “Engine error code list” on pages 6-18 to 6-33.
 AG7J018	**Coolant temperature warning lamp**	The coolant temperature is too high and the engine is overheating. Refer to “If the engine overheats” on page 6-3.
 AN4J006	**Coolant level warning lamp**	The coolant level is too low. Make sure that there is no leakage, and then add the coolant.