Warning lamp	Lamp name	Causes and remedies
 AG7J017	**Engine oil pressure warning lamp**	There is a problem in the engine lubrication system. Check the engine oil level. If the lamp is flashing when the level is normal or even after replenishment of oil or coolant, consult your sales or service dealer. Refer to “Inspecting and replenishing the engine oil” on page 5-24.
 AN4J008	**DEF/AdBlue® level warning lamp**	The DEF/AdBlue® level is low. Make sure that there is no leakage, and then add the DEF/AdBlue® solution. Refer to “Checking the DEF/AdBlue® level and refilling” on page 5-33.
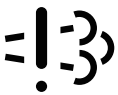 AR0J004	**SCR system warning lamp**	There is a problem in the SCR system. Contact a Takeuchi service dealer for advice.
 AR0J005	**DEF/AdBlue® quality indicator lamp**	The DEF/AdBlue® quality is deteriorated. Replace with the DEF/AdBlue® solution that complies the correct Standard.
 AG7J019	**Battery charge warning lamp**	There is a problem with the V-rib belt or charger. Check the V-rib belt for slack or breakage and adjust as necessary. If the lamp continues flashing after maintenance, there is likely a problem with the charger. Contact a Takeuchi service dealer for assistance. Refer to “Replacing the V-rib belt” on page 5-67.

Warning lamp	Lamp name	Causes and remedies
 AW4J009	**Water separator warning lamp**	Water is in the water separator. Drain water. Refer to “Inspecting the pre-fuel filter and draining” on page 5-26.
 AG7J020	**Air cleaner warning lamp**	The air cleaner is clogged. Clean it. Refer to “Inspecting and cleaning the air cleaner” on page 5-30.
 AU7J002	**Hydraulic oil temp. warning lamp**	The hydraulic oil temperature became too high due to machine overworking. Stop operation, run the engine at low idle and let the hydraulic oil cool down.
 AQ0J004	**Third auxiliary hydraulic warning lamp**	Pressure in the third auxiliary hydraulic line is too low Consult your sales or service dealer for help.
 AW4J010	**Fuel level warning lamp**	The fuel level is too low. Add fuel. Refer to “Inspecting the fuel level” on page 5-27.
 AM1J005	**Lift overload warning lamp**	This lamp starts flashing if the overload warning device is activated. If it occurs, reduce the load to be lifted. Refer to “Lift overload warning switch” on page 2-60.
 AW8J001	**Auto greasing warning indicator lamp**	The grease tank is empty or the fuse is blown; greasing is disabled. • Add grease to the grease tank • Identify the blown fuse and replace it with a new one.

VEHICLE ERROR CODE LIST

If an error code appears on the display, consult your sales or service dealer.

Error code	Error details
9	Impossible to sense ACC key
402	CAN 0 communication error
502	CAN communication error (ECM)
602	CAN communication error (cluster gauge)
612	CAN communication error (OX)
652	CAN communication error (IOX)
702	CAN communication error (HVAC)
822	CAN communication error (TAKEUCHI Security System)
1703	Main power supply voltage error (too high)
1704	Main power supply voltage error (too low)
1713	OX power supply voltage error (too high)
1714	OX power supply voltage error (too low)
1733	IOX power supply voltage error (too high)
1734	IOX power supply voltage error (too low)
2503	MC sensor voltage error (too high)
2504	MC Sensor voltage error (too low)
2513	IOX sensor voltage error (too high)
2514	IOX sensor voltage error (too low)
3300	Alternator charge faulty
3401	Engine oil pressure error
3500	Overheat
3600	Air cleaner clogged
3700	Water separator
3820	Hydraulic oil temp. too high
3823	Hydraulic oil temp. sensor voltage error (too high)
3824	Hydraulic oil temp. sensor voltage error (too low)

Error code	Error details
5303	Accelerator sensor error (short circuit)
5304	Accelerator sensor error (cable break)
5503	Fuel sender voltage error (too high)
5504	Fuel sender voltage error (too low)
5603	Lift alarm sensor error (short circuit)
5604	Lift alarm sensor error (cable break)
5833	Pressure sensor P3 error (short-circuit)
5834	Pressure sensor P3 error (cable break)
6503	AUX1 slide switch voltage value error (too high)
6504	AUX1 slide switch voltage value error (too low)
6509	AUX1 slide switch neutral error
6519	AUX1 (L) switch error
6529	AUX1 (R) switch error
6609	AUX2 slide switch neutral error
6603	AUX2 slide switch voltage value error (too high)
6604	AUX2 slide switch voltage value error (too low)
6709	AUX3 switch error
6859	Grease level low
8005	Pump PWM output electric current error (too low)
8015	AUX1 (L) PWM output electric current error (too low)
8025	AUX1 (R) PWM output electric current error (too low)
8035	AUX2 (L) PWM output electric current error (too low)
8045	AUX2 (R) PWM output electric current error (too low)
8055	Fan drive PWM output voltage error (too low)
8715	AUX1 pressure SOL output electric current error (too low)
8725	AUX2 pressure SOL output electric current error (too low)
9900	Options settings change (TFM)
9990	Model changed
9991	Unknown model

PWM = Pulse Width Modulation

ENGINE ERROR CODE LIST

If an error code appears on the display, consult your sales or service dealer.

KWP-Code	SPN	FMI	Error details
38	523925	3	UB3: Short circuit to battery error of actuator relay 3.
40	523927	3	UB5; Short circuit to battery error of actuator relay 5.
42	523924	4	UB2; Short circuit to ground actuator relay 2
43	523925	4	UB3; Short circuit to ground actuator relay 3
44	523926	4	UB4; Short circuit to ground actuator relay 4.
45	168	3	Sensor error battery voltage; signal range check high.
46	168	4	Sensor error battery voltage; signal range check low
47	168	2	High battery voltage; warning threshold exceeded
73	523912	4	@ engines < 4l: Throttle valve error, Open Load or Short circuit to Battery, blocked valve or wrong control signal for valve. @ engines with Burner T4i: Pressure Sensor error after valve (DV2), lower limit reached
84	639	14	CAN-Bus 0 “BusOff-Status”
85	1231	14	CAN-Bus 1 “BusOff-Status”
86	1235	14	CAN-Bus 2 = engine bus “BusOff-Status”
88	102	2	Charged air pressure above warning threshold.
89	102	2	Charged air pressure above shut off threshold.
93	110	1	Physical Range Check low for Coolant temperature.
96	110	3	Sensor error coolant temperature; signal range check high
97	110	4	Sensor error coolant temperature; signal range check low
98	110	0	High coolant temperature; warning threshold exceeded
99	110	0	Coolant temperature; system reaction initiated

KWP-Code	SPN	FMI	Error details
101	111	1	Coolant level too low
121	1109	2	Engine shut off demand ignored
122	523698	11	Shut off request from supervisory monitoring function
129	3224	2	DLC Error of CAN-Receive-Frame AT1IG1Vol; NOx sensor.
130	3224	9	Timeout Error of CAN-Receive-Frame AT1IG1Vol; NOx sensor.
134	523939	9	Broadcast Announce Message of the calibration message of the upstream catalytic NOx sensor has failed.
138	3234	2	DLC Error of CAN-Receive-Frame AT1O1Vol NOx
139	3234	9	Timeout Error of CAN-Receive-Frame AT1OG1Vol.
141	523942	9	Calibration message 1 of the after catalyst NOx sensor has failed.
164	523211	9	Timeout Error of CAN-Receive-Frame EBC1
167	523704	12	Timeout Error of CAN-Transmit-Frame EEC3
168	523935	12	Timeout Error of CAN-Transmit-Frame EEC3VOL1; Engine send messages
169	523936	12	Timeout Error of CAN-Transmit-Frame EEC3VOL2; Engine send messages
171	523212	9	Timeout Error of CAN-Receive-Frame ComEngPrt; Engine Protection
172	523741	14	Engine shut off request through CAN No detailed information!
179	523240	9	Timeout CAN-message FunModCtl; Function Mode Control
198	523216	9	Timeout Error of CAN-Receive-Frame PrHtEnCmd. Pre-heat command, engine command.
281	523766	9	Timeout Error of CAN-Receive-Frame Active TSC1AE
282	523767	9	Timeout Error of CAN-Receive-Frame Passive TSC1AE
283	523768	9	Timeout Error of CAN-Receive-Frame Active TSC1AR
284	523769	9	Timeout Error of CAN-Receive-Frame Passive TSC1AR
291	523776	9	Timeout Error of CAN-Receive-Frame TSC1TE - active
292	523777	9	Passive Timeout Error of CAN-Receive-Frame TSC1TE; Setpoint
293	523778	9	Timeout Error of CAN-Receive-Frame TSC1TR
294	523779	9	Passive Timeout Error of CAN-Receive-Frame TSC1TR

KWP-Code	SPN	FMI	Error details
300	523605	9	Timeout Error of CAN-Receive-Frame TSC1AE; Traction Control
301	523606	9	Timeout Error of CAN-Receive-Frame TSC1AR; Retarder
305	898	9	Timeout Error of CAN-Receive-Frame TSC1TE; Setpoint
306	520	9	Timeout Error of CAN-Receive-Frame TSC1TR; control signal
360	523982	0	Power stage diagnosis disabled; high battery voltage
361	523982	1	Power stage diagnosis disabled; low battery voltage
376	630	12	Access error EEPROM memory (delete)
377	630	12	Access error EEPROM memory (read)
378	630	12	Access error EEPROM memory (write)
381	411	4	Physical range check low for EGR differential pressure
387	523612	12	Internal software error ECU; injection cut off
388	190	0	Engine speed above warning threshold Overspeed detection in component engine protection
389	190	0	Engine speed above warning threshold (FOC-Level 1)
390	190	11	Engine speed above warning threshold (FOC-Level 2)
391	190	14	Engine speed above warning threshold (Overrun Mode)
417	171	3	Sensor error SCR-System environment temperature; DPF-System air inlet temperature; signal range check high
418	171	4	Sensor error SCR-System environment temperature; DPF-System air inlet temperature; signal range check low
419	190	8	Sensor camshaft speed; disturbed signal
420	190	12	Sensor camshaft detection; out of range, signal disrupted; no signal
421	190	2	Offset angle between crank- and camshaft sensor is too large.
422	190	8	Sensor crankshaft detection; out of range, signal disrupted; disturbed signal
423	190	12	Speed detection; out of range, signal disrupted Sensor crankshaft speed; no signal
464	97	3	Sensor error water in fuel; signal range check high
465	97	4	Sensor error water in fuel; signal range check low.
472	94	3	Sensor error low fuel pressure; signal range check high
473	94	4	Sensor error low fuel pressure; signal range check low
474	94	1	Low fuel pressure; warning threshold exceeded
475	94	1	Low fuel pressure; shut off threshold exceeded.

KWP-Code	SPN	FMI	Error details
543	676	11	Cold start device relay error
544	676	11	Cold start aid relay open load
545	729	5	Cold start aid relay open load
549	729	3	Intake Air Heater Device; Short circuit to battery
551	729	4	Air intake heater; Short circuit to ground error for power stage on CJ945.
559	523895	13	Check of missing injector adjustment value programming (IMA) injector 1 (in firing order).
560	523896	13	Check of missing injector adjustment value programming (IMA) injector 2 (in firing order).
561	523897	13	Check of missing injector adjustment value programming (IMA) injector 3 (in firing order).
562	523898	13	Check of missing injector adjustment value programming (IMA) injector 4 (in firing order).
563	523899	13	Check of missing injector adjustment value programming (IMA) injector 5 (in firing order).
564	523900	13	Check of missing injector adjustment value programming (IMA) injector 6 (in firing order).
565	523350	4	Injector cylinder-bank 1; short circuit
566	523352	4	Injector cylinder-bank 2; short circuit
567	523354	12	Injector power stage output defect
568	651	5	Injector 1 (in firing order); interruption of electric connection
569	652	5	Injector 2 (in firing order); interruption of electric connection
570	653	5	Injector 3 (in firing order); interruption of electric connection
571	654	5	Injector 4 (in firing order); interruption of electric connection
572	655	5	Injector 5 (in firing order); interruption of electric connection
573	656	5	Injector 6 (in firing order); interruption of electric connection
580	651	3	Injector 1 (in firing order); short circuit
581	652	3	Injector 2 (in firing order); short circuit
582	653	3	Injector 3 (in firing order); short circuit
583	654	3	Injector 4 (in firing order); short circuit
584	655	3	Injector 5 (in firing order); short circuit
585	656	3	Injector 6 (in firing order); short circuit

KWP-Code	SPN	FMI	Error details
592	523615	5	Metering unit (Fuel-System); open load
594	523615	3	Metering unit (Fuel-System); short circuit to battery high side
595	523615	4	Metering unit (Fuel-System); short circuit to ground high side
596	523615	3	Metering unit (Fuel-System); short circuit to battery low side
597	523615	4	Metering Unit (Fuel-System); short circuit to ground low side
599	523615	4	Metering unit, short circuit to ground
612	523612	12	Internal ECU monitoring detection reported error
613	523612	12	ECU reported internal software error Internal ECU monitoring detection reported error
614	523612	12	ECU reported internal software error
615	523612	12	ECU reported internal software error.
616	523612	12	ECU reported internal software error
617	523612	12	ECU reported internal software error
618	523612	12	ECU reported internal software error
619	523612	12	Injection system, electrical error injectors
620	523612	12	ECU reported internal software error
621	523612	12	ECU reported internal software error
623	523612	12	ECU reported internal software error
624	523612	12	ECU reported internal software error
625	523612	12	ECU reported internal software error
627	523612	12	ECU reported internal software error
628	523612	12	ECU reported internal software error
629	523612	12	Diagnostic fault check to report the accelerator pedal position error
630	523612	12	Diagnostic fault check to report the engine speed error
631	523612	12	Error in the plausibility of the injection energizing time
632	523612	12	Error in the plausibility of the start of energizing angles
633	523612	12	Diagnostic fault check to report the error due to non plausibility in ZFC

KWP-Code	SPN	FMI	Error details
634	523612	12	Diagnosis fault check to report the demand for normal mode due to an error in the PoI2 quantity
635	523612	12	Diagnosis fault check to report the error to demand for an ICO due to an error in the PoI2 shut-off
636	523612	12	Diagnosis fault check to report the error to demand for an ICO due to an error in the PoI3 efficiency factor
637	523612	12	Internal ECU monitoring detection reported error
638	523612	12	Monitoring of Fuel Quantity Correction
639	523612	12	Diagnostic fault check to report the plausibility error in rail pressure monitoring
640	523612	12	Diagnostic fault check to report the error due to torque comparison
641	523612	12	Diagnosis of curr path limitation forced by ECU monitoring level 2
642	523612	12	Diagnosis of lead path limitation forced by ECU monitoring level 2
643	523612	12	Diagnosis of set path limitation forced by ECU monitoring level 2.
644	523612	3	Reported Over Voltage of Supply
646	523612	4	Reported Under Voltage of Supply
714	523612	12	Diagnostic fault check to report WDA active due to errors in query/response communication
715	523612	12	Diagnostic fault check to report ABE active due to undervoltage detection
716	523612	12	Diagnostic fault check to report ABE active due to overvoltage detection
717	523612	12	Diagnostic fault check to report WDA/ABE active due to unknown reason
732	100	3	Sensor error oil pressure; signal range check high
733	100	4	Sensor error oil pressure sensor; signal range check low
736	100	1	Low oil pressure; warning threshold exceeded
737	100	1	Low oil pressure; shut off threshold exceeded
750	107	3	Sensor error airfilter differential pressure; short circuit to battery
751	107	0	Sensor error airfilter differential pressure; short circuit to ground
752	107	0	Air filter differential pressure; short circuit to ground

KWP-Code	SPN	FMI	Error details
772	102	2	Pressure downstream charge air cooler, plausibility error
774	102	1	Pressure downstream charge air cooler, pressure below lower physical threshold
776	102	3	Pressure downstream charge air cooler, short circuit to battery or open load
777	102	4	Pressure downstream charge air cooler, short circuit to ground
795	411	3	Sensor error differential pressure Venturi unit (EGR), signal range check low.
796	411	4	Sensor error differential pressure Venturi unit (EGR), signal range check high.
807	3253	2	Differential pressure DPF, plausibility error
809	3251	0	Differential pressure DPF maximum value is exceeded
810	3251	0	Differential pressure sensor across DPF exceeds warning high limit
812	3251	1	Differential pressure DPF, pressure below lower shutoff threshold.
813	3251	1	Differential pressure DPF, pressure below lower warning threshold.
814	3253	3	Electrical error differential pressure B58 (DPF). (Signal range check high)
815	3253	4	Electrical error differential pressure (DPF). Signal range check low.
825	523009	9	The pressure relief valve (PRV) has reached the number of allowed activations.
826	523470	2	Pressure relief valve is forced to open, perform pressure increase.
827	523470	2	Pressure Relief Valve (PRV) forced to open. Performed by pressure increase.
828	523470	12	Pressure Relief Valve (PRV) forced to open. Shutoff conditions.
829	523470	12	Pressure Relief Valve (PRV) forced to open. Warning conditions.
830	523470	14	Open Pressure Relief Valve (PRV)
831	523470	11	Pressure Relief Valve (PRV) error; Rail pressure out of tolerance range.
832	523470	11	Rail pressure out of tolerance range. The PRV can not be opened at this operating point with a pressure shock.
833	523009	10	Open time of Pressure Relief Valve (PRV) for wear out monitoring had exceeded
849	1176	3	Pressure sensor upstream turbine, signal range check (SRC) high.
850	1176	4	Pressure sensor upstream turbine, signal range check (SRC) low.

KWP-Code	SPN	FMI	Error details
856	523613	0	Rail pressure metering unit, Positive governor deviation.
857	523613	0	Rail pressure metering unit, Rail pressure disrupted. Maximum positive deviation of rail pressure exceeded.
858	523613	0	Rail pressure metering unit, Rail pressure disrupted. Maximum positive deviation of rail pressure in metering unit exceeded (RailMeUn1).
859	523613	0	Rail pressure metering unit, Rail pressure below the target range .(RailMeUn2) Rail system leakage detected. (RailMeUn10)
861	523613	1	Rail pressure metering unit, Minimum rail pressure exceeded (RailMeUn3) Negative deviation of rail pressure second stage (RailMeUn22)
862	523613	0	Rail pressure metering unit, Maximum rail pressure exceeded.
864	523613	2	Rail pressure metering unit, Setpoint of metering unit in overrun mode not plausible.
876	523470	7	Maximum rail pressure exceeded (PRV).
877	157	3	Sensor error rail pressure. Sensor voltage above upper limit.
878	157	4	Sensor error rail pressure. Sensor voltage below lower limit.
925	523720	8	DEF supply module heater temperature; duty cycle in failure range.
926	523720	8	DEF supply module heater temperature; duty cycle in invalid range.
927	523721	11	Urea supply module temperature measurement not available.
928	523722	8	DEF supply module PWM signal; period outside valid range.
929	523722	8	Detect faulty PWM signal from Supply Module.
930	523721	8	DEF supply module temperature; duty cycle in failure range.
931	523721	8	Urea supply module temperature; duty cycle in invalid range.
932	29	3	Hand throttle idle validation switch; short circuit to battery
935	91	3	Sensor error accelerator pedal. Signal range check high.
937	29	4	Hand throttle; short circuit to ground
940	91	4	Sensor error accelerator pedal. Signal is below the range.

KWP-Code	SPN	FMI	Error details
946	1079	13	Failure of sensor supply voltage 1.
947	1080	13	Failure of sensor supply voltage 2.
948	523601	13	Failure of sensor supply voltage 3.
956	677	3	Starter relay high side. Short circuit to battery.
957	677	4	Starter relay high side short circuit to ground.
958	677	5	Starter relay low side no load error.
960	677	3	Starter relay low side short circuit to battery.
961	677	4	Starter relay low side short circuit to ground.
973	523612	14	Software reset CPU SWReset_0
974	523612	14	Software reset CPU SWReset_1
975	523612	14	Software reset CPU SWReset_2
976	91	11	Plausibility error between APP1 and APP2 or APP1 and idle switch.
980	523550	12	Terminal 50 was operated too long
994	105	3	Electrical error charged air temperature. Signal range check high.(SRC)
995	105	4	Electrical error charged air temperature. Signal range check low.
996	105	0	Charged air cooler temperature. System reaction initiated. High charged air cooler temperature. Warning threshold exceeded.
997	105	0	Low charged air cooler temperature. Shut off threshold exceeded.
1007	412	3	Electrical error EGR cooler downstream temperature. Signal range check high.
1008	412	4	Electrical error EGR cooler downstream temperature. Signal range check low.
1011	523960	0	Physical range check high for EGR cooler downstream temperature.

KWP-Code	SPN	FMI	Error details
1014	51	6	Actuator error EGR-Valve (2.9;3.6) or Throttle-Valve (4.1;6.1;7.8). Signal range check high.
1015	520521	5	Actuator error EGR-Valve (2.9;3.6) or Throttle-Valve (4.1;6.1;7.8); signal range check low.
1016	51	7	Actuator position for EGR-Valve (2.9;3.6) or Throttle-Valve (4.1;6.1;7.8) not plausible.
1022	51	6	Actuator error EGR-Valve (2.9;3.6) or Throttle-Valve (4.1;6.1;7.8); signal range check high
1023	51	5	Actuator error EGR-Valve (2.9;3.6) or Throttle-Valve (4.1;6.1;7.8); signal range check low
1024	51	3	Position sensor error of actuator EGR-Valve (2.9;3.6) or Throttle-Valve (4.1;6.1;7.8). Signal range check high.
1025	51	4	Position sensor error actuator EGR-Valve (2.9;3.6) or Throttle-Valve (4.1;6.1;7.8). Signal range check low.
1026	4769	2	Temperature downstream DOC, plausibility error
1029	4766	0	Temperature downstream DOC, temperature above upper shutoff threshold
1030	4766	0	Temperature downstream DOC, temperature above upper warning threshold
1034	4769	3	Sensor error exhaust gas temperature downstream (DOC); signal range check high
1035	4769	4	Sensor error exhaust gas temperature downstream (DOC); signal range check low
1036	4768	2	Temperature upstream DOC, plausibility error
1039	4765	0	Temperature upstream DOC, temperature above upper shutoff threshold
1040	4765	0	Temperature upstream DOC, temperature above upper warning threshold
1044	4768	3	Electrical error exhaust gas temperature upstream (DOC); signal range check high
1045	4768	4	Electrical error exhaust gas temperature upstream (DOC); signal range check low
1069	4360	0	Exhaust temperature upstream SCR-Cat, temperature above upper physical threshold
1070	4360	1	Sensed exhaust temperature before SCR-Cat is < physical low limit
1072	4361	3	Sensor error DEF catalyst exhaust gas temperature upstream; signal range check high
1073	4361	4	Sensor error DEF catalyst exhaust gas temperature upstream; signal range check low

KWP-Code	SPN	FMI	Error details
1075	3361	6	DEF dosing valve; power at the end of injection too high
1077	3361	3	DEF dosing valve; short circuit to battery on low side
1078	3361	3	DEF dosing valve; short circuit to battery or open load on high side
1079	3361	4	Urea dosing valve; short circuit to ground or open load on low side
1080	3361	4	DEF dosing valve; short circuit on high side
1090	4345	5	SCR heater relay DEF returnline primary side; open load
1092	4345	3	SCR heater DEF return line; short circuit to battery
1093	4345	4	SCR heater DEF return line; short circuit to ground
1094	4343	5	SCR heater relay DEF pressure line primary side; open load
1096	4343	3	SCR heater DEF pressure line; short circuit to battery
1097	4343	4	SCR heater DEF pressure line; short circuit to ground
1098	523718	5	Tank heating valve; open load
1100	523718	3	SCR main relay (primary side); short circuit to battery
1101	523718	4	SCR main relay (primary side); short circuit to ground
1102	4341	5	SCR heater relay DEF supply line primary side; open load
1104	4341	3	SCR-heater DEF supply line; short circuit to battery
1105	4341	4	SCR-heater DEF supply line; short circuit to ground
1106	523719	5	SCR heater relay DEF supply module primary side; open load
1108	523719	3	SCR heater DEF supply module; short circuit to battery
1109	523719	4	SCR heater DEF supply module; short circuit to ground
1110	4366	5	SCR tank heating valve primary side; open load
1112	4366	3	SCR Tank heating valve; short circuit to battery
1113	4366	4	SCR Tank heating valve; short circuit to ground
1117	523632	11	Pump motor not available for actuation
1118	4375	5	Urea pump motor; open load
1120	4375	3	Urea pump motor; short circuit to battery
1121	4375	4	Urea pump motor; short circuit to ground
1122	4334	0	Supply module DEF, DEF pressure above upper physical threshold

KWP-Code	SPN	FMI	Error details
1127	523632	3	Sensor error urea pump pressure; signal range check high
1128	523632	4	Sensor error urea pump pressure; signal range check low
1129	4376	5	SCR reversal valve; open load
1131	4376	3	SCR reversal valve; short circuit to battery
1132	4376	4	SCR reversing valve; short circuit to ground
1135	3031	0	DEF tank, DEF temperature in DEF tank is too high.
1136	3031	1	DEF tank, DEF temperature below lower physical threshold
1157	97	12	Water in fuel level prefilter; maximum value exceeded
1170	523612	12	Internal software error ECU
1180	168	0	Physical range check high for battery voltage
1181	168	1	Physical range check low for battery voltage
1183	172	1	Air inlet filter sensor out of physical range check
1223	51	5	Actuator EGR-Valve (2.9;3.6) or Throttle-Valve (4.1;6.1;7.8); open load
1224	51	6	Actuator EGR-Valve (2.9;3.6) or Throttle-Valve (6.1,7.8); over current
1226	51	3	EGR-Valve (2.9;3.6) or Throttle-Valve (4.1;6.1;7.8); short circuit to battery
1227	51	3	EGR-Valve (2.9;3.6) or Throttle-Valve (4.1;6.1;7.8); short circuit to battery
1228	51	4	EGR-Valve (2.9;3.6) or Throttle-Valve (4.1;6.1;7.8); short circuit to ground
1229	51	4	EGR-Valve (2.9;3.6) or Throttle-Valve (4.1;6.1;7.8); short circuit to ground
1230	51	6	Actuator error EGR-Valve (2.9;3.6) or Throttle-Valve (4.1;6.1;7.8); Overload by short-circuit
1231	51	11	Power stage over temperature due to high current.
1232	51	4	Actuator EGR valve (2.9;3.6) or throttle valve (4.1;6.1;7.8); Voltage below threshold.
1239	523984	3	UB7; Short circuit to battery error of actuator relay 7
1241	523986	4	UB6; Short circuit to ground actuator relay 6
1242	523987	4	UB7; Short circuit to ground actuator relay 7

KWP-Code	SPN	FMI	Error details
1337	2797	4	Timeout of Short-Circuit Ground Diagnosis Cyl. Bank0;_ IVDiaShCirGndToutBnk_0
1338	2798	4	Timeout of Short-Circuit Ground Diagnosis Cyl. Bank1;_ IVDiaShCirGndToutBnk_1
1339	2797	4	Injector diagnostic; Short circuit to ground cylinder bank 0
1340	2798	4	Injector diagnostic; Short circuit to ground cylinder bank 1
1381	164	2	Rail pressure safety function is not executed correctly ()
1398	1136	0	Physical range check high for ECU temperature
1423	51	0	Warning threshold for an internal actuator error exceeded, < 4L EGR.actuator and >4L Air Intake Flap
1424	51	1	Shut off threshold for an internal actuator error exceeded, <4L EGR.actuator and >4L Air Intake Flap
1455	3711	12	Temperature during stand-still main phase too low or too high
1505	524057	2	Fuel low pressure pump; error pressure build up
1533	524074	9	NOx sensor downstream SCR-CAT, sensor internally open load
1534	524075	11	NOx sensor downstream SCR-CAT, sensor internally short circuit
1535	524076	9	NOx sensor upstream SCR-CAT, sensor internally open line
1536	524077	11	NOx sensor upstream SCR-CAT, sensor internally short circuit
1537	524078	9	NOx sensor downstream SCR-CAT, lambda value above upper physical threshold
1538	524079	9	NOx sensor downstream SCR-CAT, lambda value below lower physical threshold
1539	524080	9	NOx sensor upstream SCR-CAT, lambda value above upper physical threshold
1540	524081	9	NOx sensor upstream SCR-CAT, lambda value below lower physical threshold
1555	524063	5	Relay Urea backflow line heater: broken wiring detected (open load) Row engine: SCR-backflow line (K29) V-engine: Master: SCR-suction / backflow line (K32.1) Slave: SCR-suction / backflow line (K32.2)
1556	524063	5	SCR main relay not connected
1557	524063	5	SCR heater pressure line; open load
1558	524063	3	SCR heater main relay; short circuit to battery
1559	524063	4	SCR heater main relay load side (K31) on heating valve (Y31), Short cut to ground.
1560	524063	5	Relay Urea suction line: broken wiring detected (open load) Row engine: SCR suction line (K28) V-engine: Master: common SCR-suction line (K28) Slave: common SCR backflow line (K29)
1561	524063	5	SCR heater supply module; open load
1562	524063	5	SCR heater tank; open load

KWP-Code	SPN	FMI	Error details
1565	524065	0	Pressure sensor upstream SCR-CAT, pressure above upper physical threshold
1566	524065	1	Pressure sensor upstream SCR-CAT, pressure below lower physical threshold
1569	524065	3	Pressure sensor upstream SCR-CAT; short circuit battery or open load
1570	524065	4	Pressure sensor upstream SCR-CAT; short circuit ground
1581	524067	0	DEF supply module, heater temperature above upper physical threshold
1582	524067	1	DEF supply module, heater temperature below lower physical threshold
1585	524067	0	DEF supply module, temperature above upper physical threshold
1586	524067	1	DEF supply module, temperature below lower physical threshold
1598	524065	2	Pressure sensor upstream SCR-CAT, plausibility error
1639	524147	13	SCR System, pressure build up not possible
1646	524063	12	DEF supply module, time for defrosting too long
1647	524063	12	DEF tank, time for defrosting too long
1655	1761	14	DEF tank, DEF level below first warning threshold
1672	524118	9	Timeout error of CAN-Receive-Frame ComRxCM1
1676	524104	9	Timeout error of CAN-Receive-Frame ComRxDPFCtl
1698	524133	2	HMI system; set if restore button blocked
1699	524134	0	DPF, ash load exceeds the shutoff threshold
1700	524134	0	DPF, ash load exceeds the warning threshold
1701	524135	0	DPF, soot load exceeds the shutoff threshold
1702	524135	14	DPF, soot load exceeds the service request threshold
1703	524135	0	DPF, soot load exceeds the warning threshold
1752	2791	7	EGR actuator, actuator blocked
1753	2791	2	EGR actuator, CAN error
1754	2791	13	EGR actuator, EOL calibration error
1755	2791	12	EGR Actuator, internal electrical fault
1756	2791	13	EGR actuator, learning process aborted
1757	2791	6	EGR actuator current is above maximum threshold
1758	2791	3	EGR actuator supply voltage is above the maximum threshold
1759	2791	4	EGR actuator supply voltage is below minimum threshold.
1760	2791	13	EGR actuator, learning process out of range
1761	2791	7	EGR actuator, broken spring detected.
1762	2791	16	EGR actuator, temperature high.
1763	2791	0	EGR actuator, temperature critical high

KWP-Code	SPN	FMI	Error details
1857	523612	12	Engine starter, plausibility error of starter release condition
1858	524147	7	SCR-System, reverting valve blocked
1859	524175	0	SCR-CAT, NOx emissions above maximum threshold
1864	524178	7	SCR System, DEF pressure out of range
1866	4334	2	DEF supply module pressure, plausibility error
1867	524067	2	Supply module heater temperature, plausibility error
1868	524067	2	Supply module temperature, plausibility error
1869	1761	2	DEF tank level, plausibility error
1874	524152	2	Urea Quality Sensor; Timeout CAN message
1875	524153	2	Urea tank level & urea tank temperature via CAN bus, timeout of CAN message
1881	4768	2	Exhaust gas temperature sensors up-and downstream DOC are physically swapped
1891	524190	14	Inducement level 1 active
1892	524191	14	Inducement level 2 active
1893	524193	8	The standstill-regeneration mode time exceeds the long limit threshold. Vehicle was too long or too often in standstill mode. Change oil and reset counter.
1894	524194	8	The standstill-regeneration mode time exceeds the short-limit. Vehicle was too long or too often within a short time in standstill mode. Change oil and reset counter.
1895	3519	12	DEF tank temperature, temperature too high
1896	3520	3	DEF quality sensor, short circuit to battery or open load
1897	3520	4	DEF quality sensor, short circuit to ground
1898	3519	3	DEF quality sensor, internal temperature sensor short circuit to battery or open load
1899	3519	4	DEF quality sensor, internal temperature sensor short circuit to ground

KWP-Code	SPN	FMI	Error details
1900	524195	14	Standstill request due to crystallization ignored too long
1904	3520	2	DEF quality sensor, bad DEF quality detected or no DEF measuring possible.
1905	3520	8	DEF quality sensor, measurement conditions not fulfilled
1907	3520	13	Urea quality at UQS invalid
1908	3519	13	Temperature at UQS invalid
1909	4365	12	Urea Tank Temperature is above the warning threshold
1910	3532	13	DEF quality sensor, tank level; DEF level out of physical range
1911	3532	3	The DEF Level at UQS out of max. physical range
1912	3532	4	Quality at UQS out of min. physical range
1913	4365	13	DEF quality sensor, tank temperature; Temperature out of physical range
1914	4365	3	DEF quality sensor, tank temperature; Short circuit to battery or open load
1915	4365	4	DEF quality sensor, tank temperature; Short circuit to ground
1917	3936	14	Standstill request ignored too long.
1918	3936	14	Standstill time based escalation requests Inducement step 2
2007	524267	14	Announcement triggers the Inducement Level 2
2008	524025	8	Max. launch time for standstill exceeded (60min).
2011	4171	2	Dynamic temperature check of temp before SCR
2013	524147	13	Set together with DFC_SCRCoBldUpLoPres. DFC_SCRCoBldUpLoPresRst is only used for inducement purposes. It ensures that legal inducement is working correctly.
2014	3520	1	Bad DEF quality
2032	411	2	Insufficient change in EGR venturi signal.

OTHER SYMPTOMS

For symptoms not included in the table below or if the problem persists after the proper remedies have been taken, consult your sales or service dealer.

Symptoms	Major causes	Remedies
Left and right operating levers do not move smoothly	• Insufficient grease on the left and right operating levers	• Grease the levers. Refer to page 5-78.
Travel levers, blade lever and pedals do not move smoothly	• Insufficient grease on travel levers, blade lever and pedals	• Grease the levers and pedals. Refer to page 5-78.
Operation of hoe attachment, dozer blade, auxiliary hydraulics, slewing or traveling is not possible.	• Safety lock lever is raised (locked)	• Lower (release) the safety lock lever. Refer to page 2-65.
	• Fuse is blown	• Replace the fuse. Refer to page 6-7.
Digging force is insufficient	• Hydraulic oil level too low	• Add to the specified level. Refer to page 5-28.
	• Hydraulic oil is not warm enough	• Perform the warm-up. Refer to pages 3-10 to 3-11.
	• Air cleaner is clogged	• Clean the air cleaner. Refer to page 5-30.
	• Hydraulic oil is not of suitable type	• Replace the hydraulic oil. Refer to page 5-68.
Traveling is not possible or not smooth	• Stones or foreign objects are stuck	• Remove the foreign object.
Machine veers to the right/left	• Stones or foreign objects are stuck	• Remove the foreign object.
	• Crawler belt tension is faulty.	• Check and adjust (ask your sales or service dealer). Refer to pages 5-40 to 5-41.

Symptoms	Major causes	Remedies
Travel speed cannot be changed	• Fuse is blown	• Replace the fuse. Refer to page 6-7.
Slewing is not possible or not smooth	• Insufficient grease on slew bearing	• Grease the bearing. Refer to page 5-54.
Hydraulic oil temperature is too high	• Hydraulic oil level too low	• Add up to the specified level. Refer to page 5-28.
Starter motor turns but engine does not start	• Insufficient fuel	• Add fuel. Refer to page 5-27.
	• Air in fuel system	• Bleed air. Refer to page 6-11.
	• Water in fuel system	• Drain water. Refer to page 5-42.
	• Fuel is frozen.	• Warm the fuel pipe with hot water or wait until the ambient temperature becomes high.
	• Engine control system is faulty.	• Adjust or repair (ask your sales or service dealer).
	• Fuel line is faulty.	• Adjust or repair (ask your sales or service dealer).
	• Preheating device is faulty.	• Adjust or repair (ask your sales or service dealer).
Crawlers come off	• Crawlers too loose	• Check and adjust (ask your sales or service dealer). Refer to pages 5-40 to 5-41.

Symptoms	Major causes	Remedies
Engine exhaust is white or bluish	• Excessive engine oil	• Adjust to the specified level. Refer to page 5-24.
	• Insufficient engine warm-up.	• Perform the warm-up operation. Refer to page 3-6.
	• Engine control system is faulty.	• Adjust or repair (ask your sales or service dealer).
	• Fuel line is faulty.	• Adjust or repair (ask your sales or service dealer).
	• Prolonged idling (approx. two hours or more)	• Increase the engine RPM and check for smoke.
	• Poor fuel	• Replace the fuel.
Engine exhaust is occasionally black	• Air cleaner is clogged	• Clean the air cleaner. Refer to page 5-30.
	• Engine control system is faulty.	• Adjust or repair (ask your sales or service dealer).
	• Fuel line is faulty.	• Adjust or repair (ask your sales or service dealer).
	• Clogging in the exhaust line.	• Adjust or repair (ask your sales or service dealer).
Irregular noise is produced from the engine (combustion or mechanical noise)	• Low quality fuel is being used	• Replace the fuel.
	• Engine is overheating	• Refer to “If the engine overheats” on page 6-3.
	• Damage inside the muffler	• Replace the muffler. For replacement, ask your sales or service dealer.

LOWERING THE BOOM TO THE GROUND

If the hoe attachment must be lowered to the ground while the engine is stopped, use the following procedure.

Procedure 1 (when engine can be started)
Perform this operation within 10 minutes after the engine stopping.
1. Sit at the operator's seat.
2. Turn the starter switch to the ON position.
3. Lower the safety lock lever to the unlock position
4. Slowly push the operating lever forward to lower the boom.

Procedure 2 (when engine cannot be started)
This operation is dangerous and requires experience. Ask your sales or service dealer for it.

⚠ WARNING

- **Stop the engine and allow the machine to cool down before performing maintenance.**
  - **The engine and the hydraulic system and many other parts of the machine are hot immediately after the engine is stopped. Touching these parts will cause burns.**
  - **The hydraulic oil is also hot and under high pressure immediately after the engine is stopped.**
    Be careful when loosening the caps or plugs. Working on the machine under these conditions could result in burns or injuries due to the hot oil spurting out.
- **Keep away from the working area when the hoe attachment is lowered. You may be hit by dirt falling out of the bucket or the hoe attachment as it drops.**
- **Stand in a position away from danger of lowering boom and loosen the hose nut. Otherwise, you could be hit by the boom.**
- **Do not loosen or remove the hoses not located in the specified places. Oil may spurt out if wrongly handled.**
- **When performing maintenance on the machine, clean up the foot area and strictly observe the following so as not to fall:**
  - **Do not spill oil or grease.**
  - **Do not leave tools scattered around.**
  - **Watch your step when walking.**
- **Never jump down from the machine. Use the steps and handrails when climbing up and down the machine, and always support your body at three points with your hands and feet.**

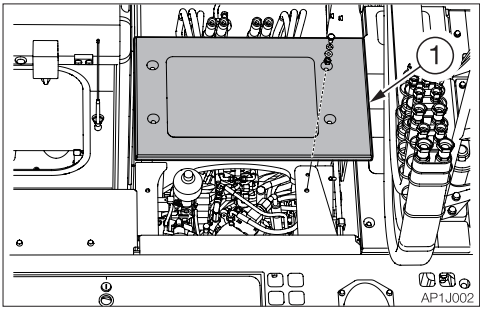

1. Remove the cover (1).

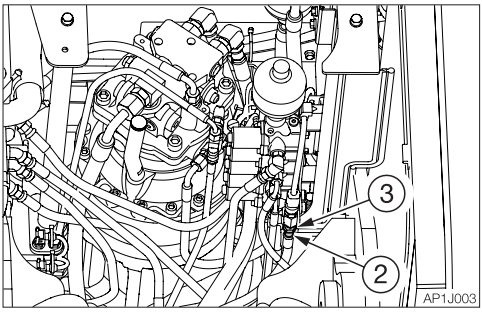

2. Place a pan under the hose to catch the waste oil.
3. Hold the hose fitting (2) with a wrench and loosen the hose nut (3) with another wrench.
4. The oil in the boom cylinder is drained and the hoe attachment is lowered.
5. After the hoe attachment is lowered to the ground, check the safety and stability of the machine.
6. Hold the hose fitting (2) with a wrench and tighten the hose nut (3) with another wrench.
   · Tightening torque: 31.4 N·m (23.1 ft-lb.)

TOWING

⚠ WARNING

When towing, serious injury or death could result, if performed incorrectly or the wire rope being used is inappropriate or not properly inspected.

- **It becomes dangerous if the wire rope breaks or becomes disengaged. Use a wire rope appropriate for the required tractive force.**
- **Do not use a wire rope that is kinked, twisted or otherwise damaged.**
- **Do not apply heavy loads abruptly to the wire rope.**
- **Wear safety gloves when handling the wire rope.**
- **Make sure there is an operator on the machine being towed as well as on the machine that is towing.**
- **Never tow on slopes.**
- **Do not let anyone come near to the wire rope while towing.**

IMPORTANT: Do not tow a machine if its engine does not start or if the machine does not run. Doing so could damage the machine being towed.

Towing the machine

Use the procedure described below to tow heavy objects or the machine itself if it should get stuck in the mud and not be able to get out on its own.

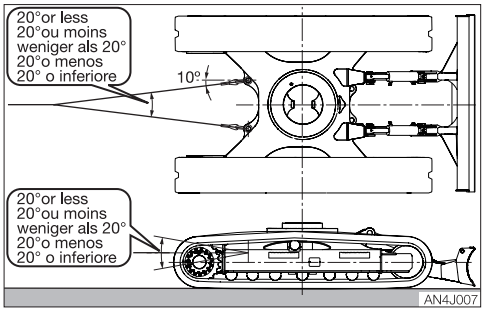

- Permissible forces: 228 kN (51254 lbf)

1. Attach the wire rope to the shackle (1).
2. Fasten the shackle (1) to the towing hole (2).
3. Make sure that the wire rope is at a cone angle of 20° or less to the travel frame.
4. Move the machine to tension the wire rope.
5. Move the machine at a low speed of 2 km/h (1.24 mph) or less to a place (convenient location for repair) a short distance from the site.

IF THE CAB IS DAMAGED

⚠ WARNING

Immediately replace the damaged cab. Serious injury or death may occur if the machine is operated with damaged cab. Do not operate the machine until the replacement is complete. Do not try to repair the damaged cab by welding. Doing so could endanger the safety of the cab.

Cab part number: 05786-00161

<Applicable machine models 514900459 or later>

EXHAUST GAS CONTROL SYSTEM ERROR

ERROR CODE LIST

If the exhaust gas control system detects an error, the ECM error warning lamp flashes and the following error codes appear.
If an error code appears, immediately repair the fault part detected, or consult your sales or service dealer for help.

N: NCD
P: PCD
NCD: NOx Control Diagnostic system
PCD: Particulate Control Diagnostic system

KWP-Code	SPN	FMI	Error details	PCD or NCD Error	Limited engine (Induce-ment)
129	3224	2	DLC Error of CAN-Receive-Frame AT1IG1Vol; NOx sensor.	N	√
130	3224	9	Timeout Error of CAN-Receive-Frame AT1IG1Vol; NOx sensor.	N	√
134	523939	9	Broadcast Announce Message of the calibration message of the upstream catalytic NOx sensor has failed.	N	√
138	3234	2	DLC Error of CAN-Receive-Frame AT1O1Vol NOx	N	√
139	3234	9	Timeout Error of CAN-Receive-Frame AT1OG1Vol.	N	√
141	523942	9	Calibration message 1 of the after catalyst NOx sensor has failed.	N	√
168	523935	12	Timeout Error of CAN-Transmit-Frame EEC3VOL1; Engine send messages	N	√
169	523936	12	Timeout Error of CAN-Transmit-Frame EEC3VOL2; Engine send messages	N	√
417	171	3	Sensor error SCR-System environment temperature; DPF-System air inlet temperature; signal range check high	N	√
418	171	4	Sensor error SCR-System environment temperature; DPF-System air inlet temperature; signal range check low	N	√
795	411	3	Sensor error differential pressure Venturi unit (EGR), signal range check low.	N	√
796	411	4	Sensor error differential pressure Venturi unit (EGR), signal range check high.	N	√

KWP-Code	SPN	FMI	Error details	PCD or NCD Error	Limited engine (Induce-ment)
807	3253	2	Differential pressure DPF, plausibility error	P	√
809	3251	0	Differential pressure DPF maximum value is exceeded	P	√
810	3251	0	Differential pressure sensor across DPF exceeds warning high limit	P	√
812	3251	1	Differential pressure DPF, pressure below lower shutoff threshold.	P	√
813	3251	1	Differential pressure DPF, pressure below lower warning threshold.	P	√
814	3253	3	Electrical error differential pressure B58 (DPF). (Signal range check high)	P	√
815	3253	4	Electrical error differential pressure (DPF). Signal range check low.	P	√
849	1176	3	Pressure sensor upstream turbine, signal range check (SRC) high.	N	√
850	1176	4	Pressure sensor upstream turbine, signal range check (SRC) low.	N	√
925	523720	8	DEF supply module heater temperature; duty cycle in failure range.	N	√
926	523720	8	DEF supply module heater temperature; duty cycle in invalid range.	N	√
927	523721	11	Urea supply module temperature measurement not available.	N	√
928	523722	8	DEF supply module PWM signal; period outside valid range.	N	√
929	523722	8	Detect faulty PWM signal from Supply Module.	N	√
930	523721	8	DEF supply module temperature; duty cycle in failure range.	N	√
931	523721	8	Urea supply module temperature; duty cycle in invalid range.	N	√
1014	51	6	Actuator error EGR-Valve (2.9;3.6) or Throttle-Valve (4.1;6.1;7.8). Signal range check high.	N	
1015	520521	5	Actuator error EGR-Valve (2.9;3.6) or Throttle-Valve (4.1;6.1;7.8); signal range check low.	N	
1016	51	7	Actuator position for EGR-Valve (2.9;3.6) or Throttle-Valve (4.1;6.1;7.8) not plausible.	N	
1022	51	6	Actuator error EGR-Valve (2.9;3.6) or Throttle-Valve (4.1;6.1;7.8); signal range check high	N	
1023	51	5	Actuator error EGR-Valve (2.9;3.6) or Throttle-Valve (4.1;6.1;7.8); signal range check low	N	
1024	51	3	Position sensor error of actuator EGR-Valve (2.9;3.6) or Throttle-Valve (4.1;6.1;7.8). Signal range check high.	N	
1025	51	4	Position sensor error actuator EGR-Valve (2.9;3.6) or Throttle-Valve (4.1;6.1;7.8). Signal range check low.	N	

KWP-Code	SPN	FMI	Error details	PCD or NCD Error	Limited engine (Induce-ment)
1026	4769	2	Temperature downstream DOC, plausibility error	P	
1034	4769	3	Sensor error exhaust gas temperature downstream (DOC); signal range check high	P	
1035	4769	4	Sensor error exhaust gas temperature downstream (DOC); signal range check low	P	
1036	4768	2	Temperature upstream DOC, plausibility error	P	
1044	4768	3	Electrical error exhaust gas temperature upstream (DOC); signal range check high	P	
1045	4768	4	Electrical error exhaust gas temperature upstream (DOC); signal range check low	P	
1070	4360	1	Sensed exhaust temperature before SCR-Cat is < physical low limit	N	√
1072	4361	3	Sensor error DEF catalyst exhaust gas temperature upstream; signal range check high	P, N	√
1073	4361	4	Sensor error DEF catalyst exhaust gas temperature upstream; signal range check low	P, N	√
1075	3361	6	DEF dosing valve; power at the end of injection too high	N	√
1077	3361	3	DEF dosing valve; short circuit to battery on low side	N	√
1078	3361	3	DEF dosing valve; short circuit to battery or open load on high side	N	√
1079	3361	4	Urea dosing valve; short circuit to ground or open load on low side	N	√
1080	3361	4	DEF dosing valve; short circuit on high side	N	√
1117	523632	11	Pump motor not available for actuation	N	√
1118	4375	5	Urea pump motor; open load	N	√
1121	4375	4	Urea pump motor; short circuit to ground	N	√
1122	4334	0	Supply module DEF, DEF pressure above upper physical threshold	N	√
1127	523632	3	Sensor error urea pump pressure; signal range check high	N	√
1128	523632	4	Sensor error urea pump pressure; signal range check low	N	√
1129	4376	5	SCR reversal valve; open load	N	√
1131	4376	3	SCR reversal valve; short circuit to battery	N	√
1132	4376	4	SCR reversing valve; short circuit to ground	N	√
1135	3031	0	DEF tank, DEF temperature in DEF tank is too high.	N	√
1136	3031	1	DEF tank, DEF temperature below lower physical threshold	N	

KWP-Code	SPN	FMI	Error details	PCD or NCD Error	Limited engine (Induce-ment)
1223	51	5	Actuator EGR-Valve (2.9;3.6) or Throttle-Valve (4.1;6.1;7.8); open load	N	
1224	51	6	Actuator EGR-Valve (2.9;3.6) or Throttle-Valve (6.1,7.8); over current	N	
1226	51	3	EGR-Valve (2.9;3.6) or Throttle-Valve (4.1;6.1;7.8); short circuit to battery	N	
1227	51	3	EGR-Valve (2.9;3.6) or Throttle-Valve (4.1;6.1;7.8); short circuit to battery	N	
1228	51	4	EGR-Valve (2.9;3.6) or Throttle-Valve (4.1;6.1;7.8); short circuit to ground	N	
1229	51	4	EGR-Valve (2.9;3.6) or Throttle-Valve (4.1;6.1;7.8); short circuit to ground	N	
1230	51	6	Actuator error EGR-Valve (2.9;3.6) or Throttle-Valve (4.1;6.1;7.8); Overload by short-circuit	N	
1231	51	11	Power stage over temperature due to high current.	N	
1232	51	4	Actuator EGR valve (2.9;3.6) or throttle valve (4.1;6.1;7.8); Voltage below threshold.	N	
1241	523986	4	UB6; Short circuit to ground actuator relay 6	N	√
1423	51	0	Warning threshold for an internal actuator error exceeded, < 4L EGR.actuator and >4L Air Intake Flap	N	
1424	51	1	Shut off threshold for an internal actuator error exceeded, <4L EGR.actuator and >4L Air Intake Flap	N	
1533	524074	9	NOx sensor downstream SCR-CAT, sensor internally open load	N	√
1534	524075	11	NOx sensor downstream SCR-CAT, sensor internally short circuit	N	√
1535	524076	9	NOx sensor upstream SCR-CAT, sensor internally open line	N	√
1536	524077	11	NOx sensor upstream SCR-CAT, sensor internally short circuit	N	√
1537	524078	9	NOx sensor downstream SCR-CAT, lambda value above upper physical threshold	N	√
1539	524080	9	NOx sensor upstream SCR-CAT, lambda value above upper physical threshold	N	√
1566	524065	1	Pressure sensor upstream SCR-CAT, pressure below lower physical threshold	N	√
1569	524065	3	Pressure sensor upstream SCR-CAT; short circuit battery or open load	P, N	√
1570	524065	4	Pressure sensor upstream SCR-CAT; short circuit ground	P, N	√

KWP-Code	SPN	FMI	Error details	PCD or NCD Error	Limited engine (Induce-ment)
1582	524067	1	DEF supply module, heater temperature below lower physical threshold	N	√
1586	524067	1	DEF supply module, temperature below lower physical threshold	N	√
1598	524065	2	Pressure sensor upstream SCR-CAT, plausibility error	P, N	√
1752	2791	7	EGR actuator, actuator blocked	N	√
1753	2791	2	EGR actuator, CAN error	N	√
1755	2791	12	EGR Actuator, internal electrical fault	N	√
1757	2791	6	EGR actuator current is above maximum threshold	N	√
1758	2791	3	EGR actuator supply voltage is above the maximum threshold	N	√
1759	2791	4	EGR actuator supply voltage is below minimum threshold.	N	√
1761	2791	7	EGR actuator, broken spring detected.	N	√
1858	524147	7	SCR-System, reverting valve blocked	N	√
1859	524175	0	SCR-CAT, NOx emissions above maximum threshold	N	√
1864	524178	7	SCR System, DEF pressure out of range	N	√
1866	4334	2	DEF supply module pressure, plausibility error	N	√
1867	524067	2	Supply module heater temperature, plausibility error	N	√
1868	524067	2	Supply module temperature, plausibility error	N	√
1874	524152	2	Urea Quality Sensor; Timeout CAN message	N	√
1875	524153	2	Urea tank level & urea tank temperature via CAN bus, timeout of CAN message	N	√
1895	3519	12	DEF tank temperature, temperature too high	N	√
1896	3520	3	DEF quality sensor, short circuit to battery or open load	N	√
1897	3520	4	DEF quality sensor, short circuit to ground	N	√
1898	3519	3	DEF quality sensor, internal temperature sensor short circuit to battery or open load	N	√
1899	3519	4	DEF quality sensor, internal temperature sensor short circuit to ground	N	√
1904	3520	2	DEF quality sensor, bad DEF quality detected or no DEF measuring possible.	N	√
1905	3520	8	DEF quality sensor, measurement conditions not fulfilled	N	√

KWP-Code	SPN	FMI	Error details	PCD or NCD Error	Limited engine (Induce-ment)
1908	3519	13	Temperature at UQS invalid	N	√
1909	4365	12	Urea Tank Temperature is above the warning threshold	N	√
1910	3532	13	DEF quality sensor, tank level; DEF level out of physical range	N	√
1911	3532	3	The DEF Level at UQS out of max. physical range	N	√
1912	3532	4	Quality at UQS out of min. physical range	N	√
1913	4365	13	DEF quality sensor, tank temperature; Temperature out of physical range	N	√
1914	4365	3	DEF quality sensor, tank temperature; Short circuit to battery or open load	N	√
1915	4365	4	DEF quality sensor, tank temperature; Short circuit to ground	N	√
2011	4171	2	Dynamic temperature check of temp before SCR	P, N	√
2013	524147	13	Set together with DFC_SCRCoBldUpLoPres. DFC_SCRCoBldUpLoPresRst is only used for inducement purposes. It ensures that legal inducement is working correctly.	N	√
2014	3520	1	Bad DEF quality	N	√
2032	411	2	Insufficient change in EGR venturi signal.	N	√

NOX CONTROL DIAGNOSTIC SYSTEM (NCD)

The NCD system warns the operator of any error detected by flashing the warning lamp and displaying an engine error code. The engine output is limited depending on the type of fault.

PARTICULATE CONTROL DIAGNOSTIC SYSTEM (PCD)

The PCD system warns the operator of any error detected in the particulate after-treatment system such as the DPF, by using the warning lamp and displaying an engine error code.

LIMITING THE ENGINE OUTPUT

If the exhaust gas control system detects an error, the engine output is limited depending on the type of fault.
Note: If the time interval between the fault repairing and error detecting is short, the regular operation may be executed with a shorter pre operation.

Pre operation: If an error is detected, the engine torque becomes limited.
Regular operation: If the pre operation continues, the regular operation is activated to forcibly set the engine speed to low idle. The regular operation continues until the error is resolved.

SPECIFICATIONS



BASIC SPECIFICATIONS

Type				Mono boom	2-Piece boom
MASS					
Operating mass	kg (lb)	Rubber crawlers		15420 (33995)	16050 (35384)
		Steel crawlers		15520 (34215)	16150 (35604)
PERFORMANCE					
Bucket capacity (Standard bucket)	m^3 (cu. ft.)	Heaped		0.45 (15.89)	
		Struck		0.34 (12.01)	
Slew speed	min^{-1} (rpm)			11 (11)	
Travel speed	km/h (mph)	Rubber crawlers	1st	2.9 (1.80)	
			2nd	5.5 (3.42)	
		Steel crawlers	1st	2.7 (1.68)	
			2nd	5.1 (3.17)	
Gradeability	(degrees)			35	
Ground pressure	kPa (psi)	Rubber crawlers		45.4 (6.58)	47.3 (6.86)
		Steel crawlers		46.2 (6.7)	48.1 (6.97)
Noise level dB (A)		Sound power level		L_{WA} 99	
		Emission sound pressure level at the operator's position (ISO 6396,2008:)		L_{pA} 75*/74**	
ENGINE					
Manufacturer and model				DEUTZ TCD3.6L4	
Rated output	(ISO 14396)	kW/min^{-1} (hp/rpm)		85/2000 (113.9/2000)	
Displacement		ml (cu.in.)		3621 (221)	
Amount of CO_2 emission****		g/kWh		742.9***	
Starter		V-kW		24-4.0	
Alternator		V-kW		28-2.24	
Battery (IEC 60095-1)		V-A·h		12-90 X 2	
CCA		A		795	

*: Applicable machine models 514800502 or later
**: Applicable machine models 514900333 or later
***: Applicable machine models 514900459 or later
****: The amount of CO_2 emission refers to the value obtained by testing the parent engine representing the engine type (engine family member) being used; it shall not guarantee the performance of the machine.

MEMO

MACHINE DIMENSIONS

Mono boom

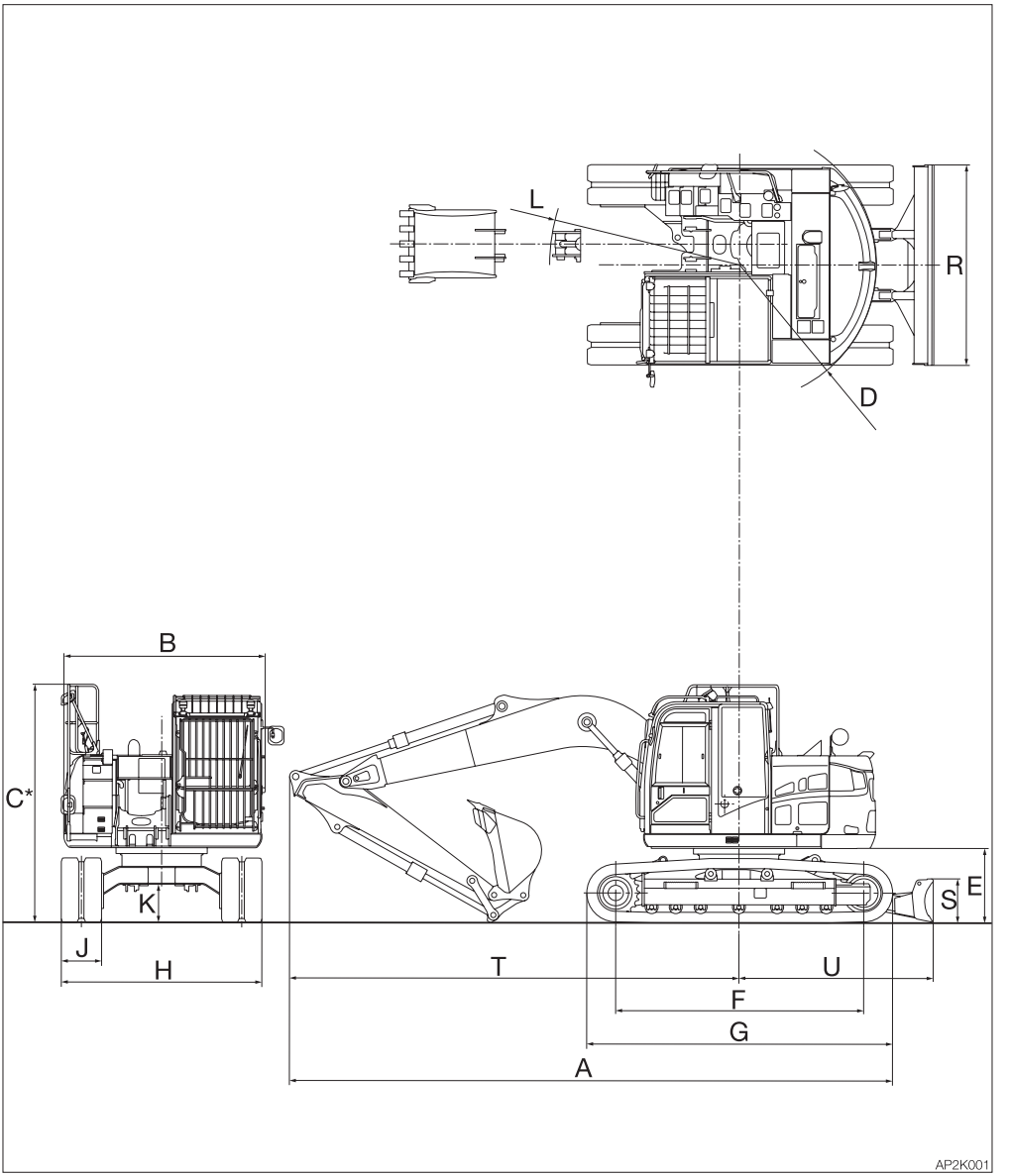

Unit: mm (inch)

	Item	Middle arm		Long arm	
		Rubber crawlers	Steel crawlers	Rubber crawlers	Steel crawlers
A	Overall length	7490 (294.9)	7470 (294.1)	7445 (293.1)	7405 (291.5)
B	Upperstructure overall width	2500 (98.4)	←	←	←
C*	Overall height	2960 (116.5)	2950 (116.1)	3190 (125.6)	←
D	Slew radius	1700 (66.9)	←	←	←
E	Clearance height under upperstructure	930 (36.6)	900 (35.4)	930 (36.6)	900 (35.4)
F	Crawler base	3080 (121.3)	3045 (119.9)	3080 (121.3)	3045 (119.9)
G	Crawler overall length	3795 (149.4)	3750 (147.6)	3795 (149.4)	3750 (147.6)
H	Crawler overall width	2490 (98)	←	←	←
J	Crawler shoe width	500 (19.7)	←	←	←
K	Ground clearance of undercarriage	475 (18.7)	445 (17.5)	475 (18.7)	445 (17.5)
L	Minimum radius of equipment and attachment	2360 (92.9)	←	2610 (102.8)	←
R	Dozer blade width	2490 (98)	←	←	←
S	Dozer blade height	550 (21.7)	←	←	←
T	Front distance to axis of rotation	5580 (219.7)	←	5535 (217.9)	←
U	Dozer blade distance to axis of rotation	2395 (94.3)	←	←	←

C*: For the long arm machine, the boom height is higher than the handrail.

2-Piece boom

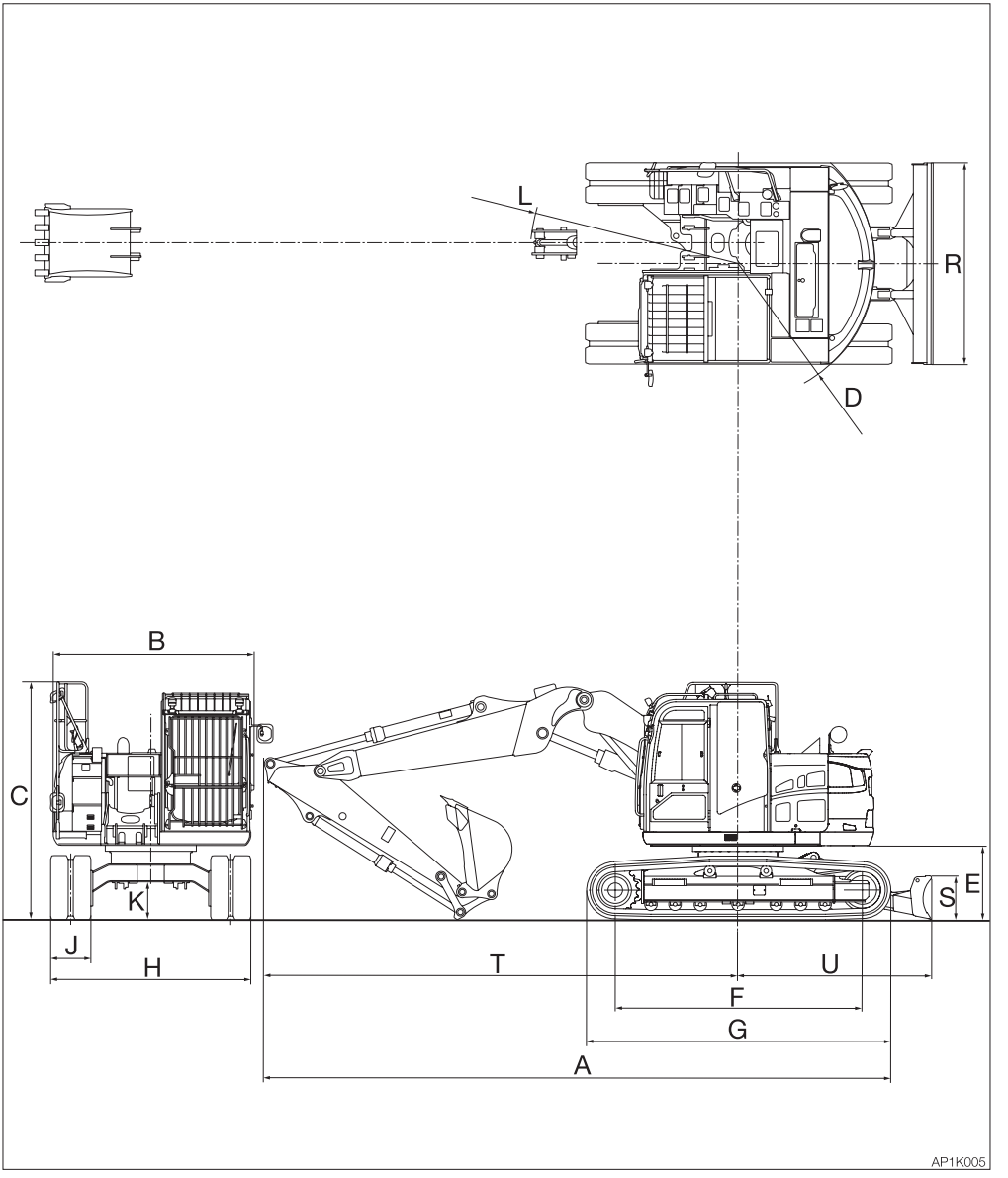

Unit: mm (inch)

	Item	Middle arm	
		Rubber crawlers	Steel crawlers
A	Overall length	7785 (306.5)	←
B	Upperstructure overall width	2500 (98.4)	←
C	Overall height	2960 (116.5)	2950 (116.1)
D	Slew radius	1700 (66.9)	←
E	Clearance height under upperstructure	930 (36.6)	900 (35.4)
F	Crawler base	3080 (121.3)	3045 (119.9)
G	Crawler overall length	3795 (149.4)	3750 (147.6)
H	Crawler overall width	2490 (98)	←
J	Crawler shoe width	500 (19.7)	←
K	Ground clearance of undercarriage	475 (18.7)	445 (17.5)
L	Minimum radius of equipment and attachment	2590 (102)	←
R	Dozer blade width	2490 (98)	←
S	Dozer blade height	550 (21.7)	←
T	Front distance to axis of rotation	5880 (231.5)	←
U	Dozer blade distance to axis of rotation	2395 (94.3)	←

OPERATING RANGES

Mono boom

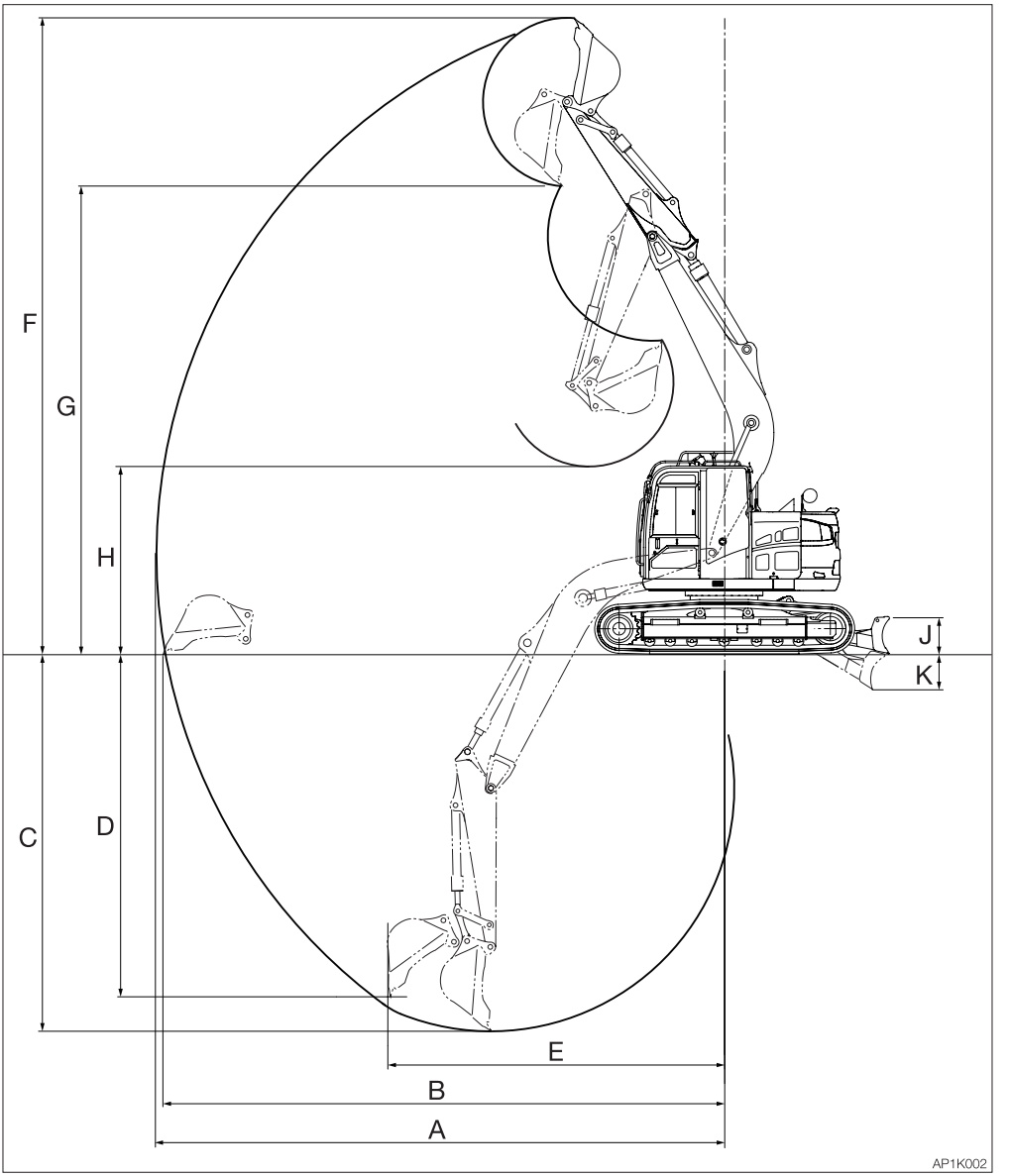

Unit: mm (inch)

	Item	Middle arm		Long arm	
		Rubber crawlers	Steel crawlers	Rubber crawlers	Steel crawlers
A	Maximum reach	8330 (328)	←	8790 (346.1)	←
B	Maximum reach at ground reference plane	8195 (322.6)	←	8665 (341.1)	←
C	Maximum digging depth	5500 (216.5)	5530 (217.7)	6030 (237.4)	6060 (238.6)
D	Maximum vertical digging depth	4995 (196.7)	5025 (197.8)	5515 (217.1)	5545 (218.3)
E	Reach at maximum vertical digging depth	4915 (193.5)	←	5025 (197.8)	←
F	Maximum height of cutting edge	9300 (366.1)	9270 (365)	9630 (379.1)	9600 (378)
G	Maximum dumping height	6845 (269.5)	6815 (268.3)	7170 (282.3)	7140 (281.1)
H	Minimum dumping height	2750 (108.3)	2720 (107.1)	2280 (89.8)	2250 (88.6)
J	Dozer blade maximum lifting	540 (21.3)	510 (20.1)	540 (21.3)	510 (20.1)
K	Dozer blade maximum lowering	515 (20.3)	545 (21.5)	515 (20.3)	545 (21.5)

2-Piece boom

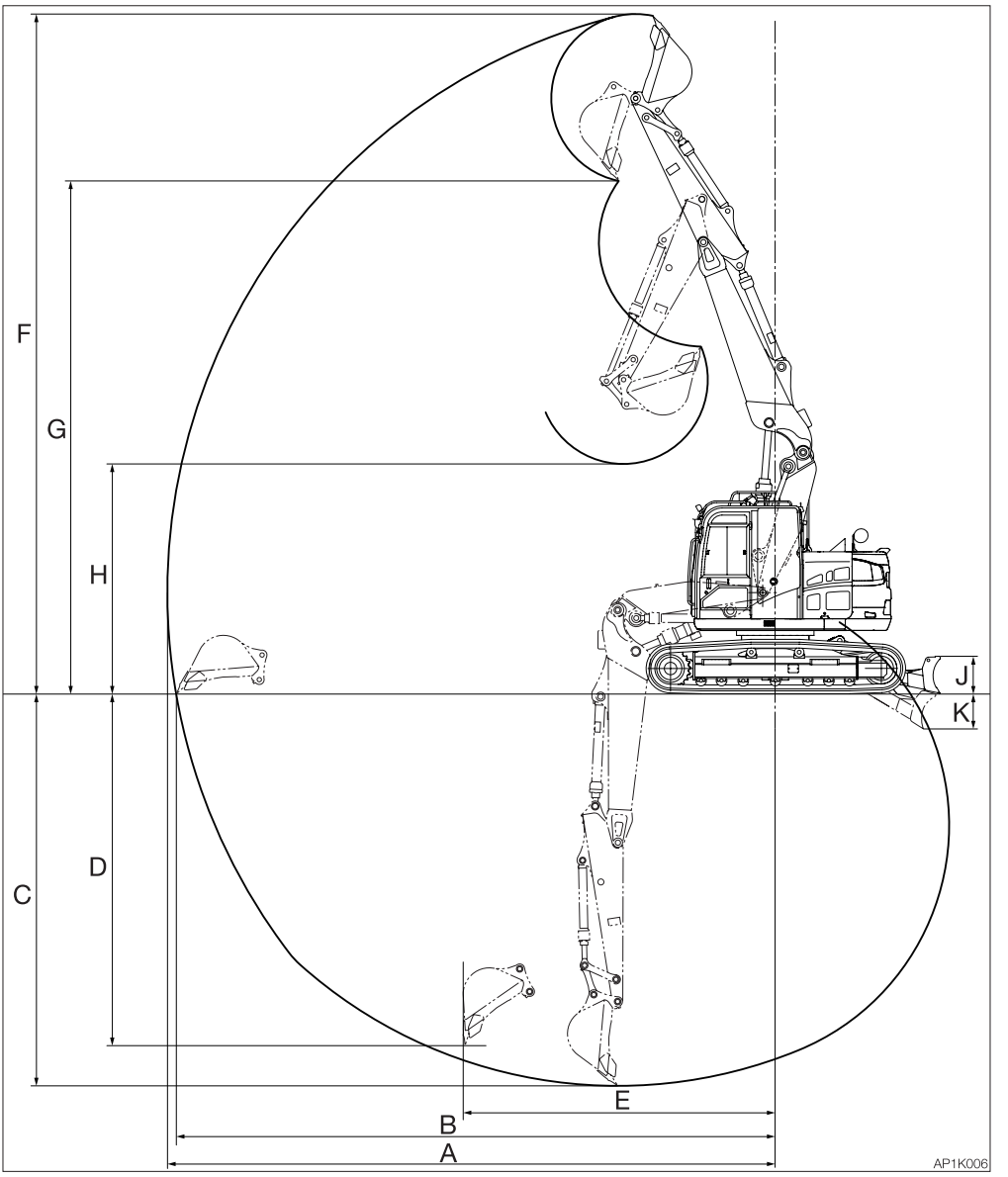

Unit: mm (inch)

	Item	Middle arm	
		Rubber crawlers	Steel crawlers
A	Maximum reach	8860 (348.8)	←
B	Maximum reach at ground reference plane	8730 (343.7)	←
C	Maximum digging depth	5720 (225.2)	5750 (226.4)
D	Maximum vertical digging depth	5130 (202)	5160 (203.1)
E	Reach at maximum vertical digging depth	4545 (178.9)	←
F	Maximum height of cutting edge	9925 (390.7)	9895 (389.6)
G	Maximum dumping height	7490 (294.9)	7460 (293.7)
H	Minimum dumping height	3360 (132.3)	3330 (131.1)
J	Dozer blade maximum lifting	540 (21.3)	510 (20.1)
K	Dozer blade maximum lowering	515 (20.3)	545 (21.5)

LIFTING CAPACITIES

When an excavator is used to lift loads in Europe, it must comply with EN 474-1. Install the following devices, and then turn on the overload warning switch before starting the lifting operation:

- Lifting device
- Lifting safety device

The lifting safety device must include the emergency shut-off valves on the boom and on the arm.

For a 2-piece boom machine, an emergency shut-off valve must be installed on the first boom, the second boom and the arm, respectively.

If the blade is used as an outrigger when lifting loads, the blade cylinder must be equipped with an emergency shut-off valve. Refer to “Lifting safety device” on page 2-104.

Rated lift capacity chart

- The loads in the charts do not exceed 87% of hydraulic lift capacity or 75% of tipping load.
- Figures marked with an asterisk (*, ※) are hydraulically-limited capacities.
- The bucket mass is excluded.
- The mass of slings and any other lifting devices shall be deducted from the rated load to determine the net load that may be lifted.
- The load point is the bucket hinge pin.
- The bucket cylinder is fully extended.
- Unit: kg (lbs)

Lifting device (If equipped)

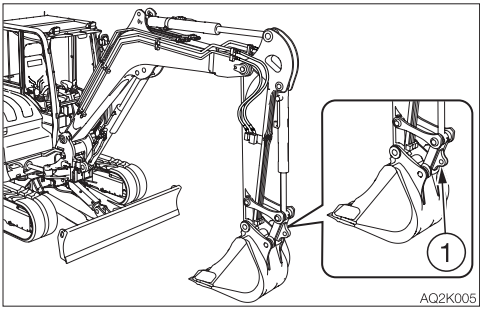

When lifting loads, install the sling on the lifting device (1).

Load hooking system

A load hooking system must be provided with the following capabilities.

1. A system which can withstand two-and-a-half times the rated lift capacity no matter at what position the load is applied.
2. A system that poses no risk of the lifted load falling from the hooking device. For example, equipped with a hook slippage prevention device.
3. A system that poses no risk of the hooking system slipping from the hoe attachment.

Inspection before lifting loads

Before lifting loads, inspect the following items to ensure there is no abnormality:

- Inspect for any damage to the attachment, hose or lifting device.
- Confirm that the overload warning device operates.
  Turn on the overload warning switch, and then fully raise the boom. If the horn is sounded, the overload warning device is normal.

⚠ WARNING

- **Do not attempt to lift or hold any load that is greater than these rated values at their specified load radii and height.**
- **The rated lift capacities are based on the machine being level and situated on a firm supporting surface. For safe lifting, the operator is expected to make due allowance for the particular job conditions such as soft or uneven ground, non-level condition, load to the machine sides, hazardous conditions, experience of personnel, etc. The operator and other personnel should fully acquaint themselves with the operator's manual furnished by the manufacturer before operating this machine. When operating the machine, the safety rules of the equipment must also be followed.**
- **Do not travel while lifting a load; It is very dangerous.**
- **Do not lift loads when the boom is being swung to the right or left. Doing so could cause the machine to tip over.**

Mono-boom with dozer blade (middle arm)

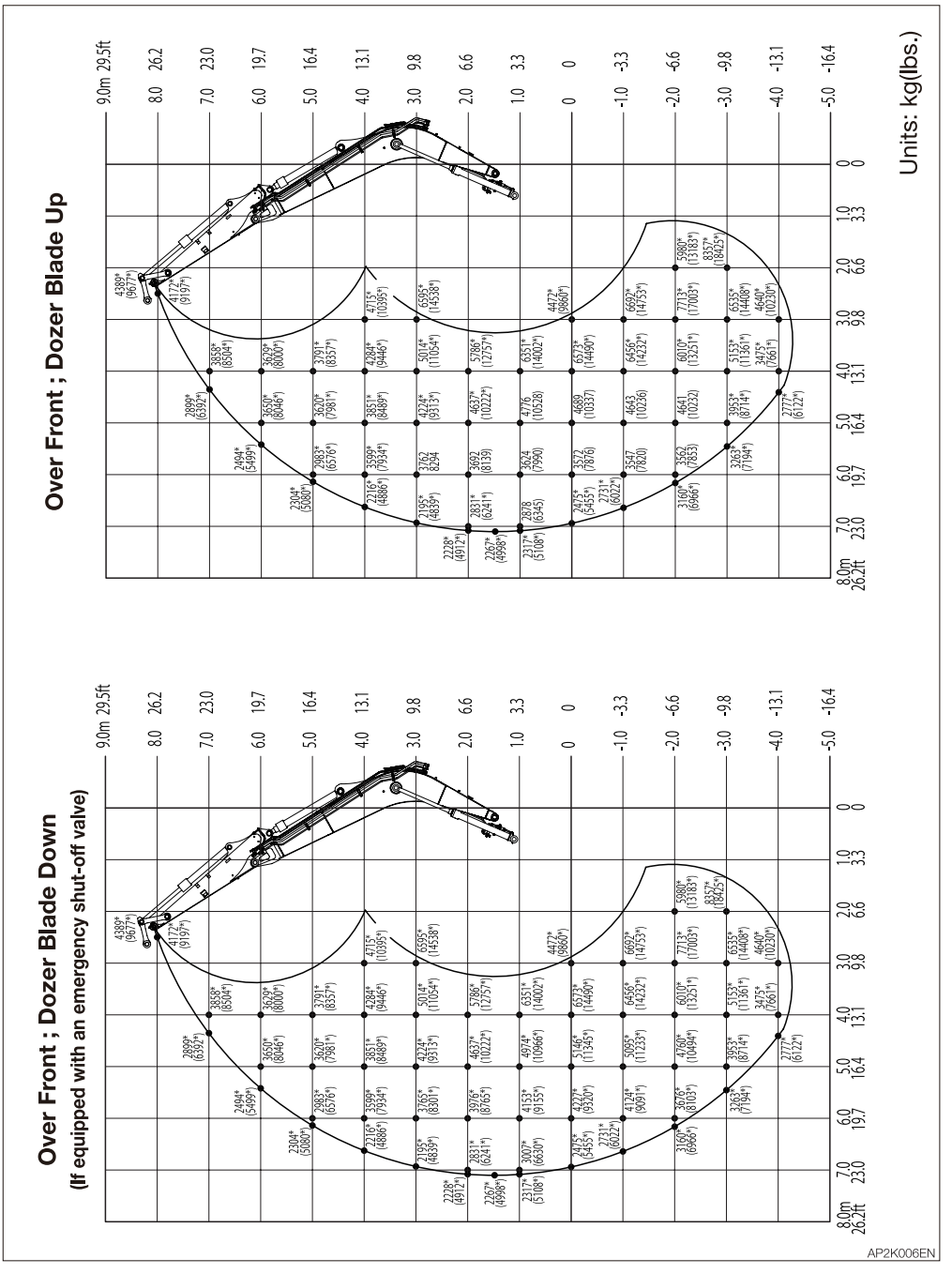

Mono-boom with dozer blade (middle arm)

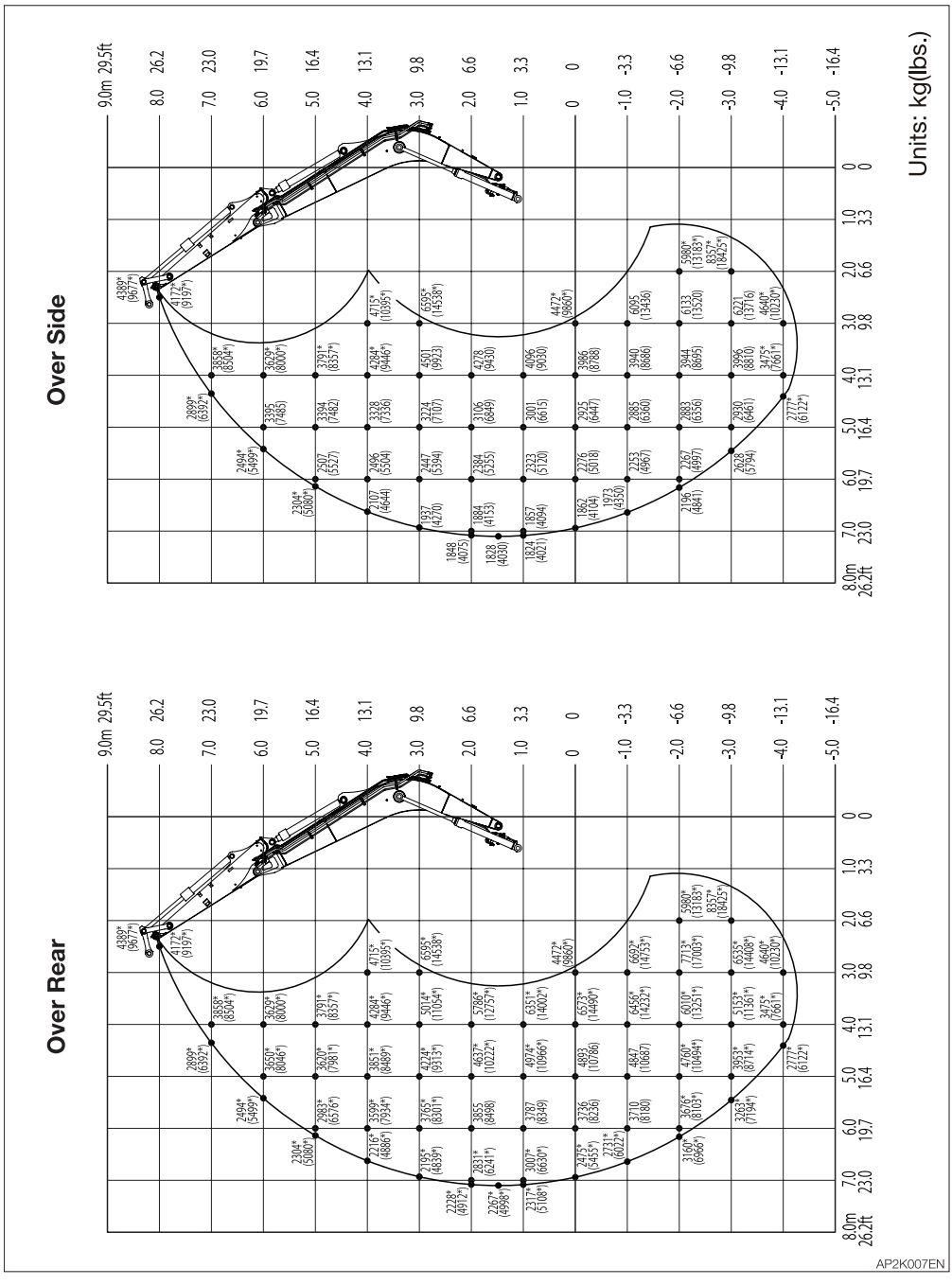

Mono-boom with dozer blade (long arm)

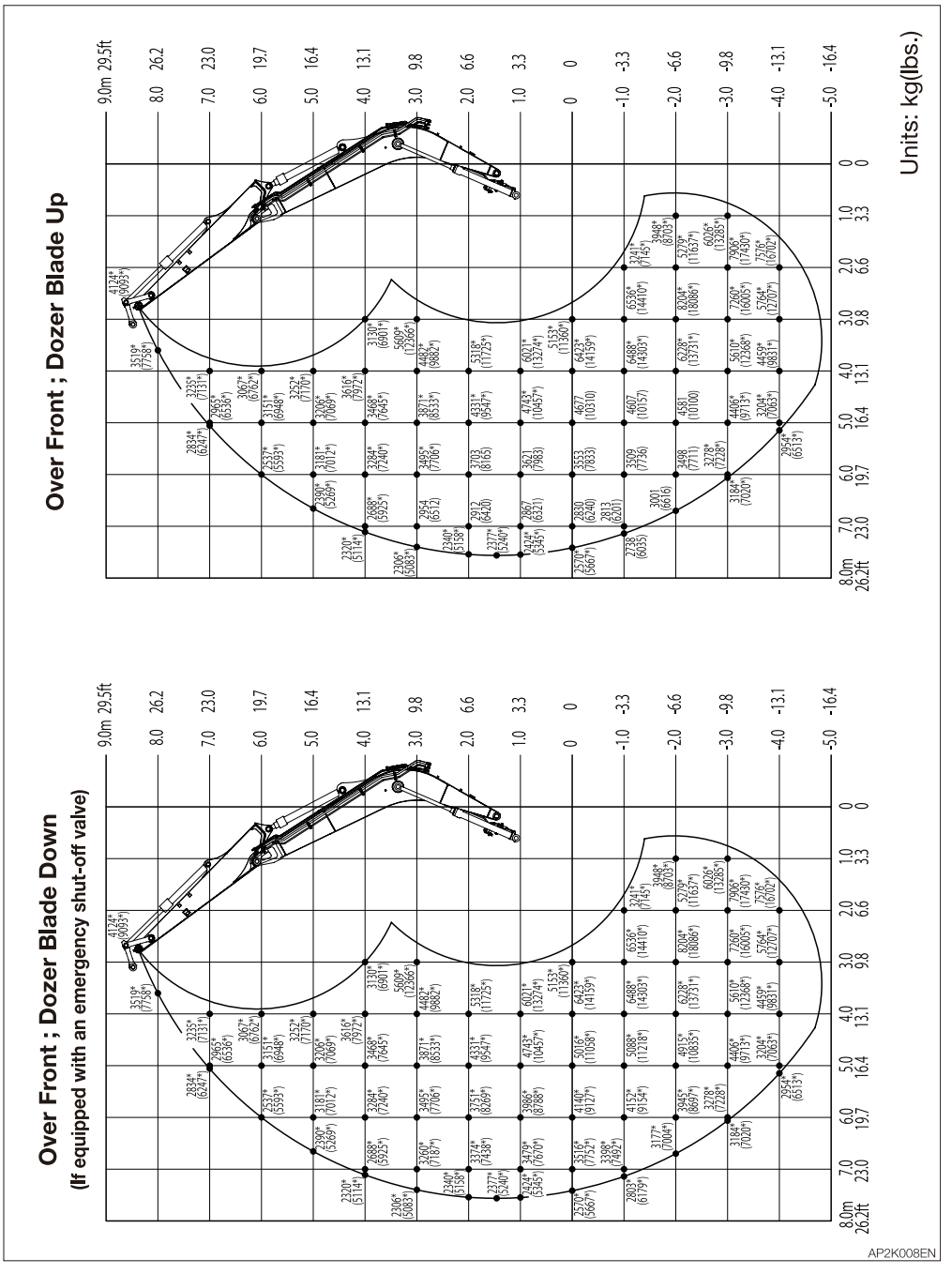

Mono-boom with dozer blade (long arm)

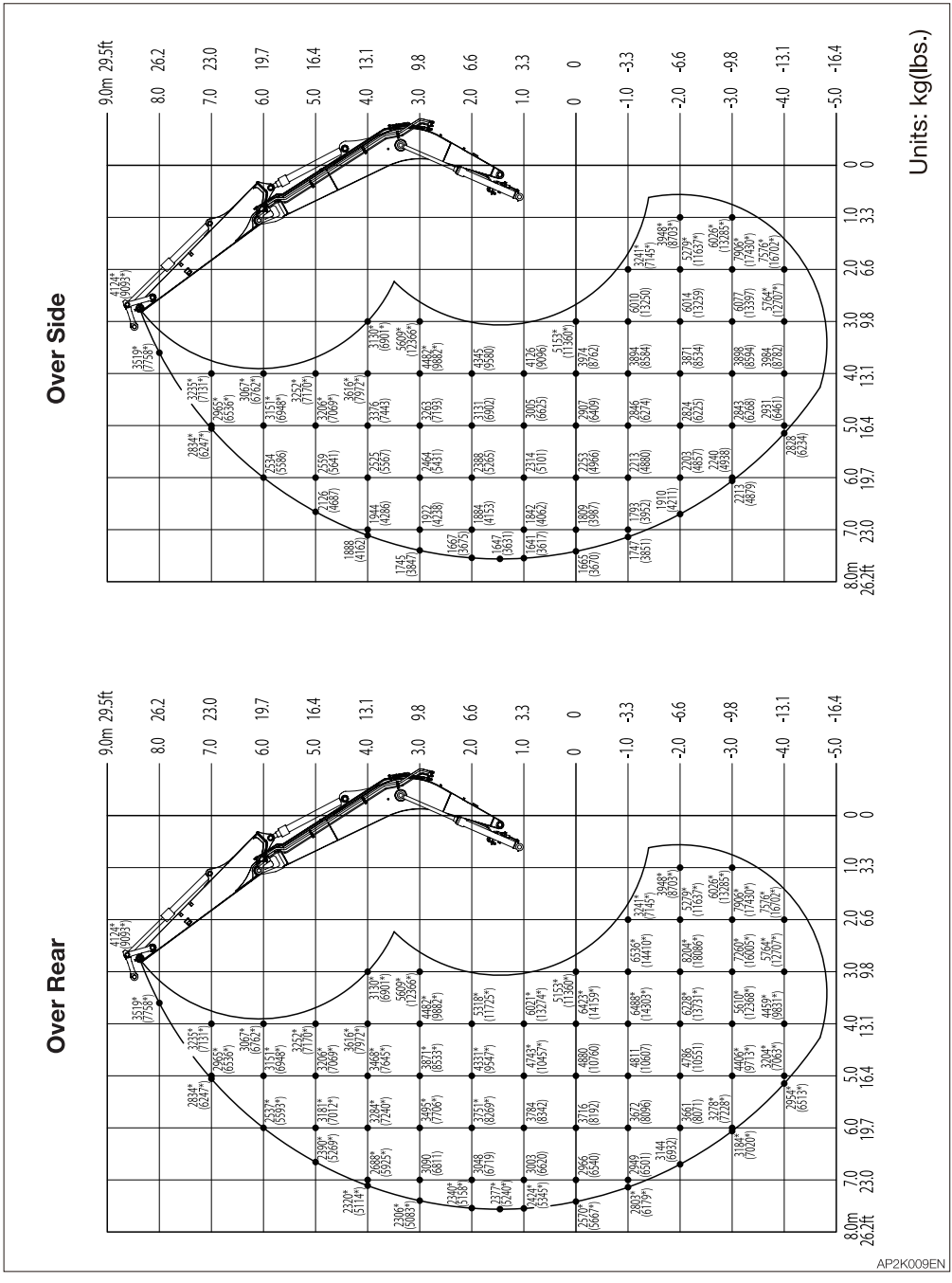

Mono-boom without dozer blade (middle arm)

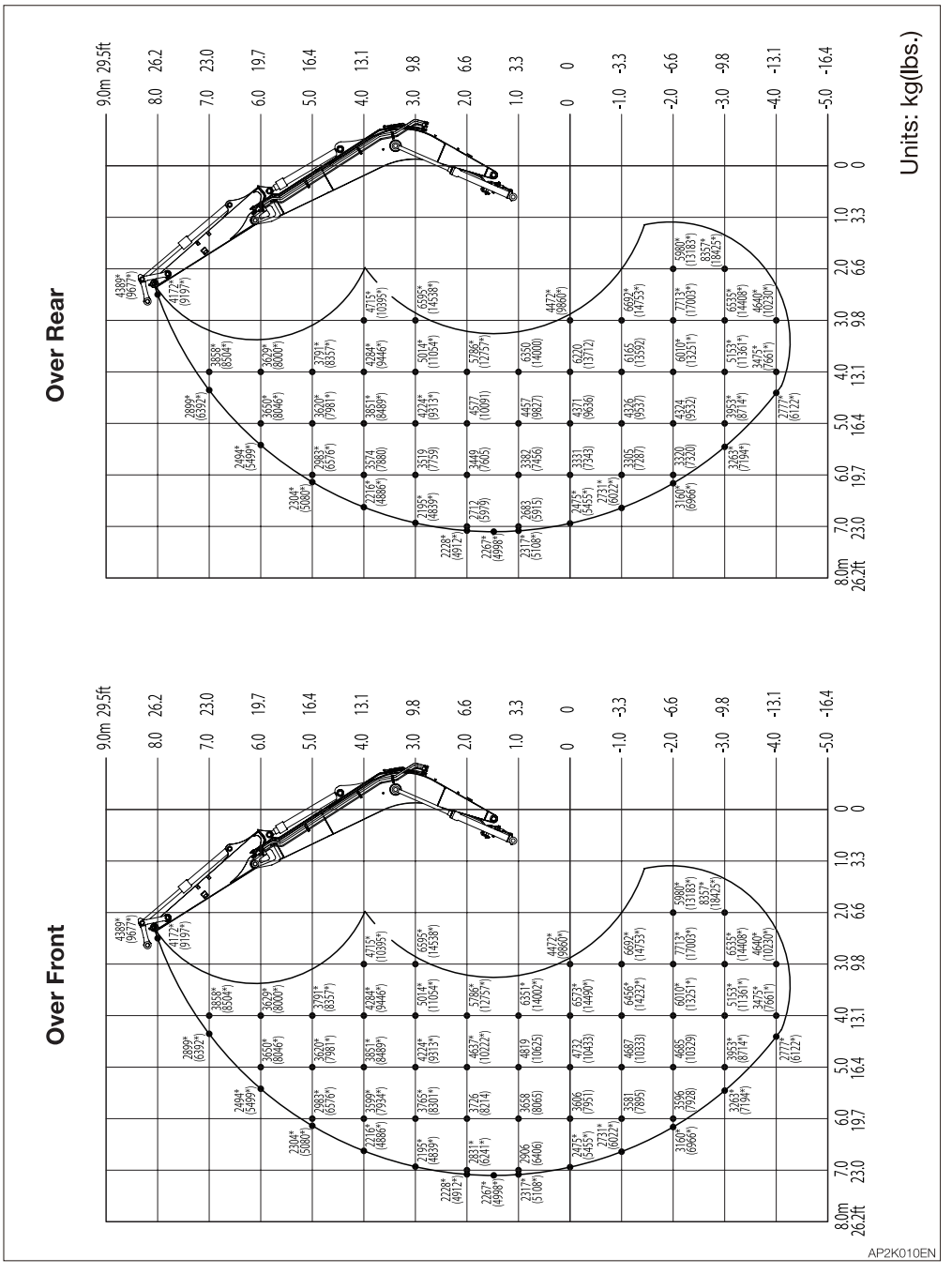

Mono-boom without dozer blade (middle arm)

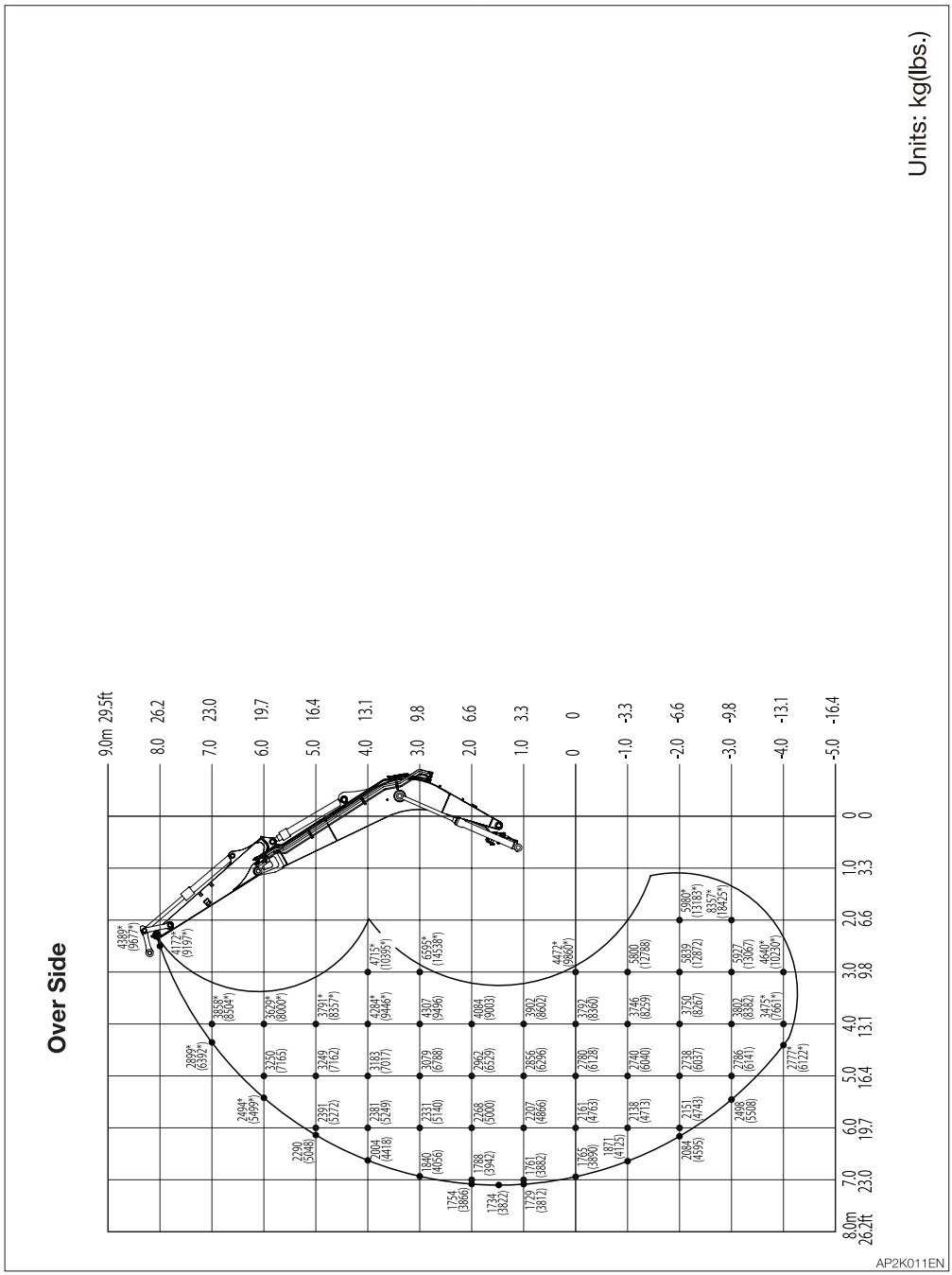

Mono-boom without dozer blade (long arm)

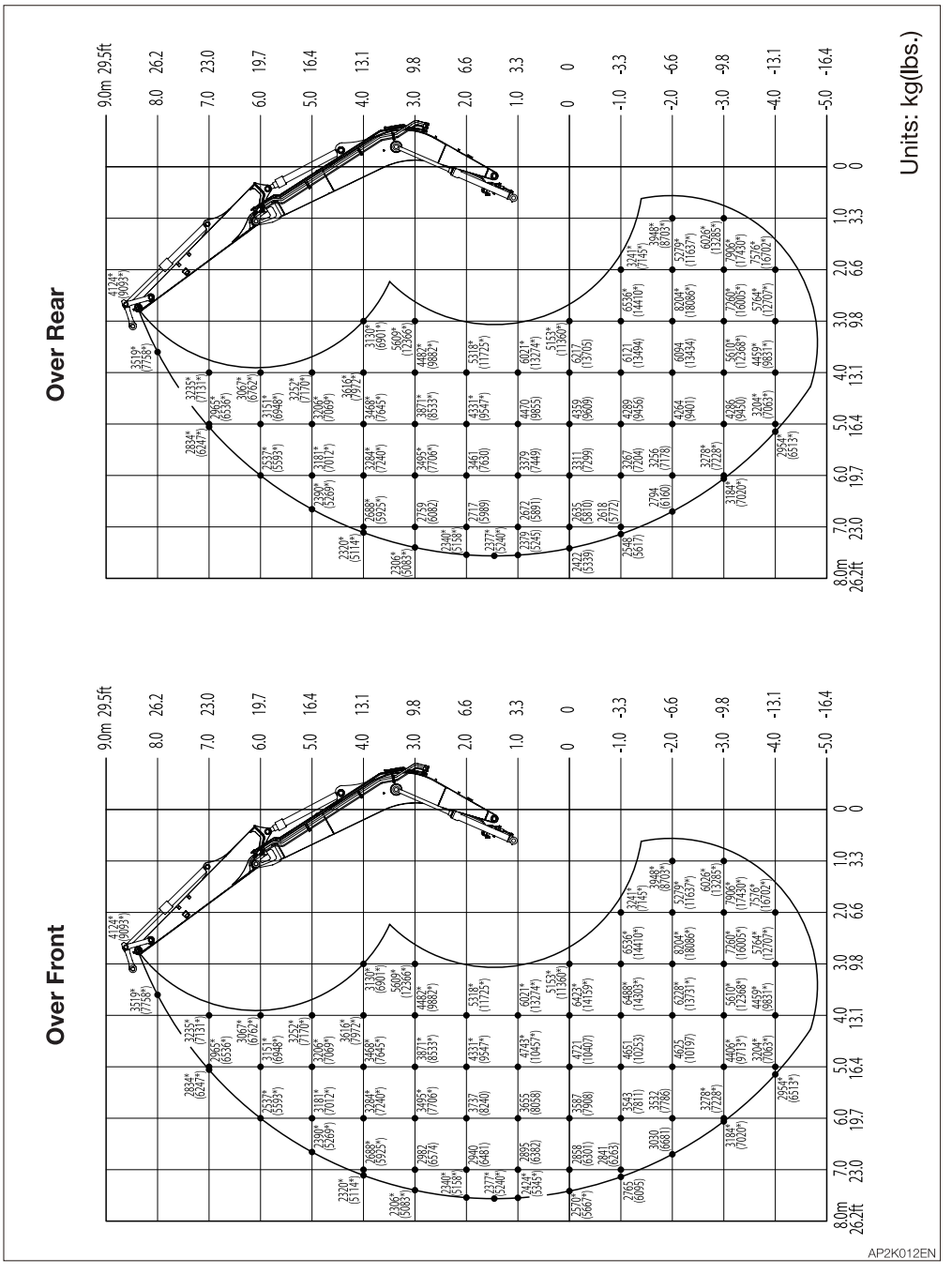

Mono-boom without dozer blade (long arm)

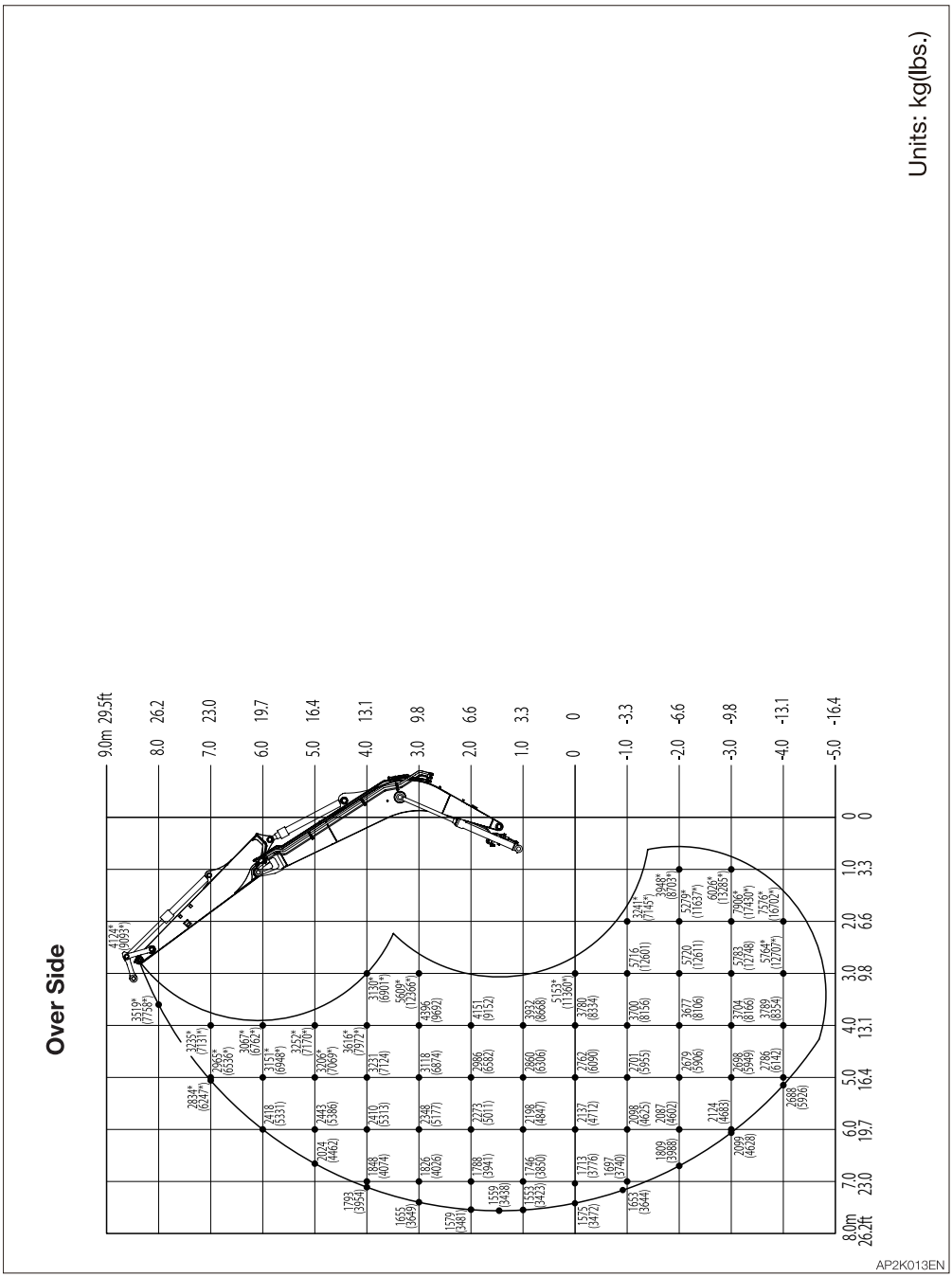

2-Piece boom

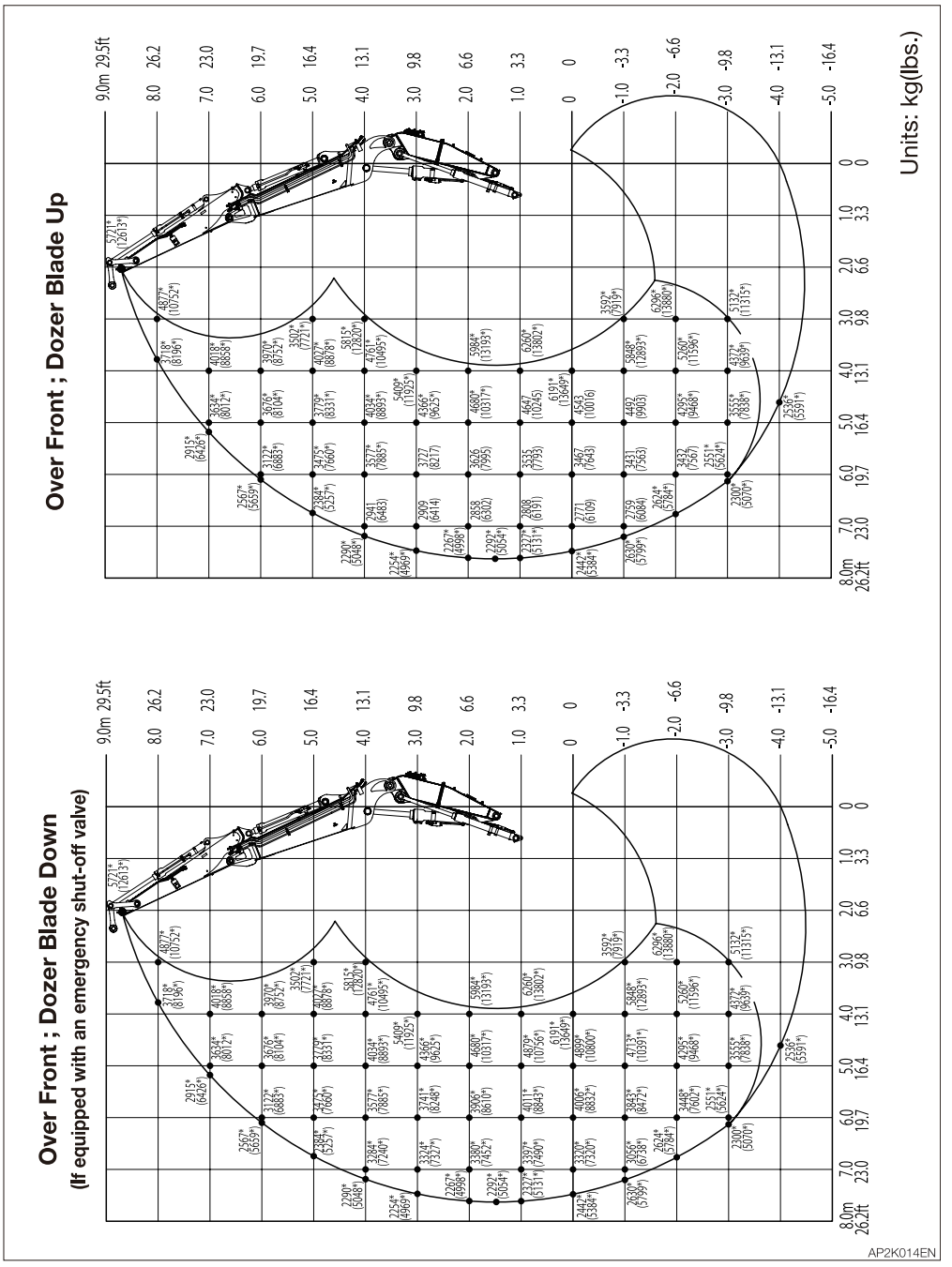
Over Front ; Dozer Blade Up
Over Front ; Dozer Blade Down
(If equipped with an emergency shut-off valve)
Units: kg(lbs.)
AP2K014EN

2-Piece boom

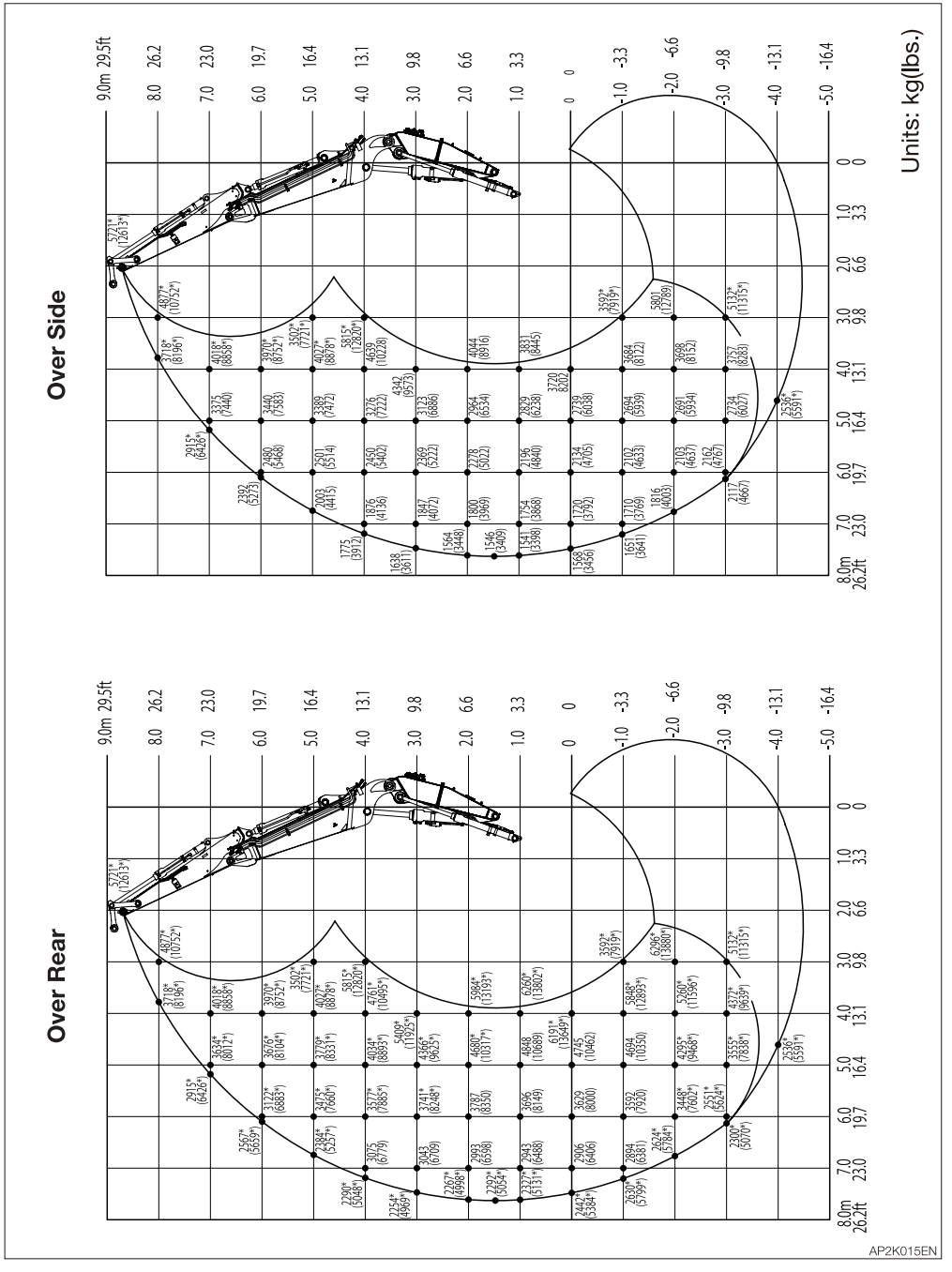

OPTIONS

GENERAL PRECAUTIONS

SAFETY PRECAUTIONS

⚠ WARNING

When removing or installing an attachment or optional part, take the following precautions.

- **Consult with Takeuchi before installing an optional attachment.**
- **Do not use any attachments not approved by Takeuchi. Doing so may cause safety problems. Or, it may adversely affect the machine's operation or service life.**
- **We will not be held responsible for any injuries, accidents or damage to its products caused by the use by a non-approved attachment.**
- **Select a firm, level work area. Also, be sure to park in a well ventilated place.**
- **Clear obstacles and dangerous objects, and clean up spilled fuel immediately.**
- **When lifting, be sure to designate a person to act as a signalman. Follow the instructions of the signalman regarding the procedure and measures.**
- **When it is necessary to temporally place a heavy object or an attachment on the ground during removal or installation, be sure to place it in a stable position.**
- **Keep everyone out of the area when lifting. There is a hazard of objects falling or contacting with people in the area.**
- **Use a crane to move heavy objects (25 kg (55 lb.) or greater).**
- **Before removing a heavy object, be sure to put a support to it. When lifting with a crane, pay attention to the center of gravity of the load to keep the machine in balance.**
- **Do not operate the machine while the load is lifted by a crane stand.**
- **Use the proper procedure when mounting a boom or arm; otherwise serious damage could result. Consult your sales or service dealer for help.**

CAUTIONS WHEN INSTALLING ATTACHMENTS

Be sure to perform a test operation after an optional or other special attachment has been replaced. Inspect the hydraulic oil level and recharge it as necessary. Consult your sales or service dealer for detailed procedures on installing/removing attachments.

CAUTIONS WHEN OPERATING ATTACHMENTS

⚠ WARNING

Long attachments reduce stability of the machine. The machine may tip over if it loses the balance when traveling or slewing on slopes.
Never perform the operations listed below as they are extremely dangerous.

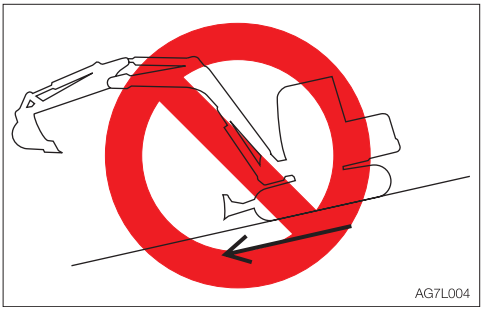

- Traveling down the slopes with the attachment raised



- Traveling across slopes

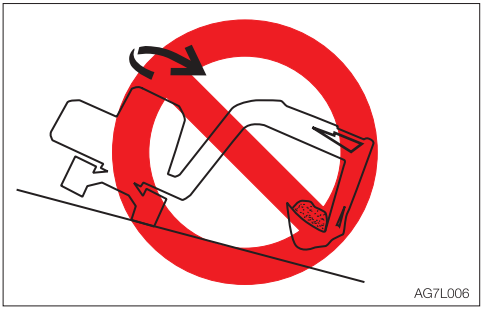

- Slewing on slopes
- If there is a heavy attachment is installed, the machine takes longer distance than usual to come to a complete stop when the stopping operation is performed. Carefully judge the distance so as not to bump into an object around the machine. Keep a safe distance from surrounding obstacles. When a heavy attachment is installed, natural drop (the gradual dropping of the attachment under its own weight when it is stopped in midair) increases.
- The machine can tip over more easily in the lateral direction than in the longitudinal direction.
  - Do not slew sideways with a heavy load at the how attachment. In particular, do not slew sideways on slopes.
  - The attachment is heavier for machines equipped with breakers or crushers than for machines equipped with the standard bucket. Do not operate such machines sideways, especially digging downhill.
- When a long arm is installed, the operating range increases. Carefully judge the distance so as not to bump into an object around the machine. Keep a safe distance from surrounding obstacles.

ATTACHMENT COMBINATION TABLE

The table below shows which bucket should be installed when the machine is using a standard arm, middle arm or long arm. Select a proper bucket by following the table.

⚠ WARNING

- **Consult with Takeuchi before installing an optional attachment.**
- **Do not use any attachments not approved by Takeuchi. Doing so may cause safety problems. Or, it may adversely affect the machine's operation or service life.**
- **We will not be held responsible for any injuries, accidents or damage to its products caused by the use by a non-approved attachment.**

√: Can be used.
Δ: Can be used only for light operations (digging and loading of dry and loose soil or mud)
—: Cannot be used.
Total bucket mass = Bucket mass + Heaped bucket load (specific gravity: 1.8)

Bucket	Rated capacity m^3 (cu.yd.)	Bucket cutting width mm (inch)	Middle arm 2320 mm (91.3 in.)	Long arm 2850 mm (112.2 in.)
970 W (S.T.D.)	0.45 (0.54)	970 (38.2)	√	√
Total bucket mass = Within 1190 kg (2620 lb.)		Within 970 (38.2)	√	√

MEMO

HYDRAULIC BREAKER

For handling of the breaker, read the hydraulic breaker's manual, provided separately.

IMPORTANT: When installing an attachment, make sure that it is appropriate for the machine being used. Contact your sales or service dealer for advice on selecting attachments.

CAUTIONS ON OPERATING

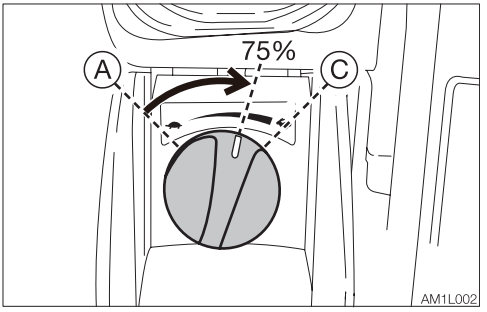

- Start the engine and run it at 75% of the maximum speed.

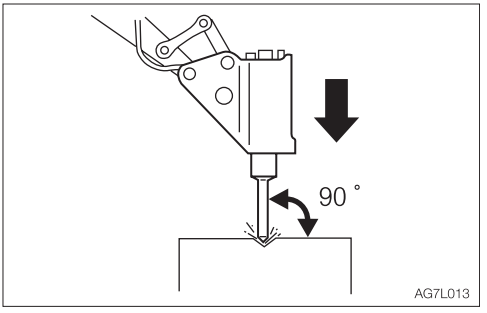

- Pound with the chisel pressed perpendicular to the surface to be pounded.
- When pounding, press the chisel properly against the object to be broken so as to avoid pounding the air.

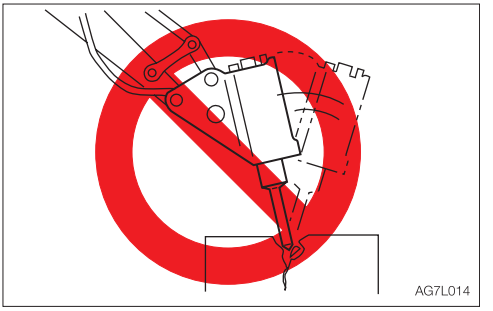

- Do not pry with the chisel or do not pry while pounding.
- Do not move the chisel while pounding.
- Do not pound continuously for over 30 seconds on the same surface.

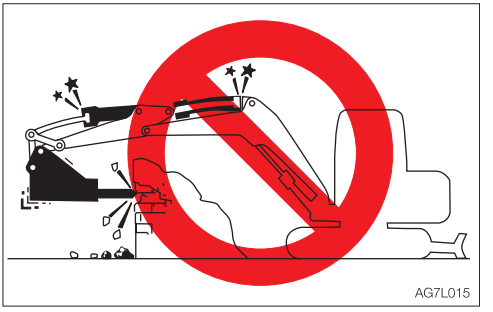

- Do not pound with the cylinder fully extended or retracted (at the stroke end). Leave a margin of at least 50mm (2 in).

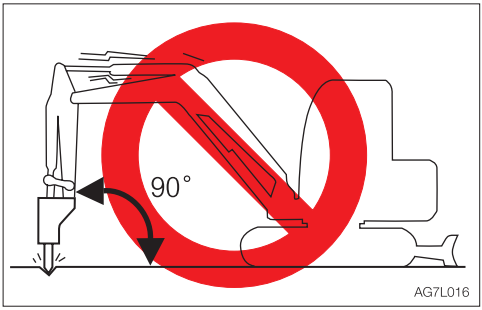

- Do not pound with the arm placed perpendicular to the ground surface.

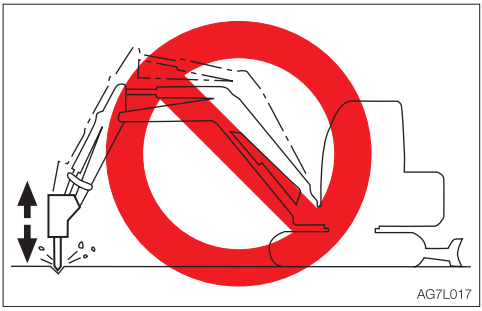

- Do not drop the breaker itself on the object to be broken in order to break it.
- Do not move objects to be broken or rocks with the breaker itself.
- Slew the machine occasionally to cool the engine.
- If a hydraulic hose is vibrating abnormally, nitrogen gas may be leaking from the accumulator. Ask for an inspection early.

REPLACING THE HYDRAULIC OIL REGULARLY

When a hydraulic breaker is used, the oil deteriorates more quickly than that used for a usual operation. Be sure to replace the hydraulic oil and the return filter elements.

- Failure to replace these in time can lead to damage to the machine and the breaker hydraulic system. To improve the service life of the hydraulic systems, be sure to replace the hydraulic oil and return filter element after the number of hours shown on the diagram below.
- When replacing the hydraulic oil, clean the suction strainer.

Replacement interval (hours)

Item	Hydraulic oil	Filter element
1st time	—	25
2nd time	—	100
Periodically	1200 (600)	200

When the breaker operating ratio is 100%.

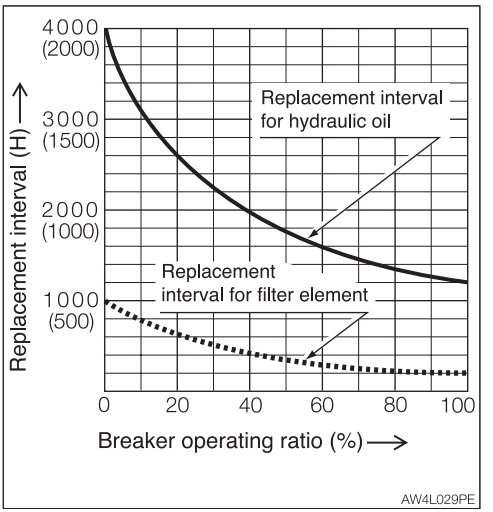

( ): When using conventional antiwear hydraulic oil.

TRAVEL ALARM

The alarm sounds while the machine is traveling and stops when the machine stops traveling.
If the alarm does not sound when the machine travels, the fuse may be blown. Inspect the fuses.

⚠ WARNING

If the fuse blows again soon after replacement, then the electric system is likely faulty. It may pose a fire hazard if not properly repaired. Contact your sales or service dealer for advice.

1. Turn the starter key to the OFF position to stop the engine.

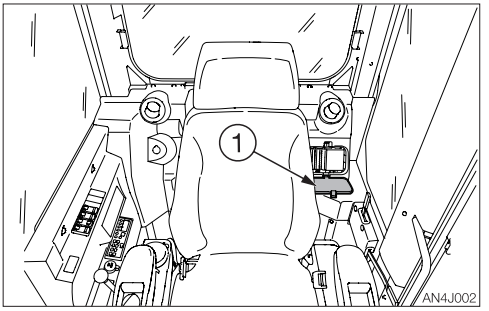

2. Loosen the screw and open the fuse box cover (1).
3. Check for any blown fuses (2).

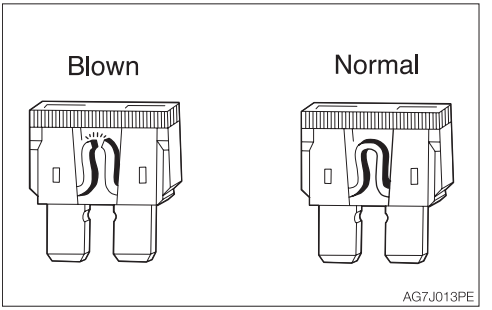

4. If a fuse is blown, replace it with a spare fuse of the same capacity.

Fuse layout and circuits protected

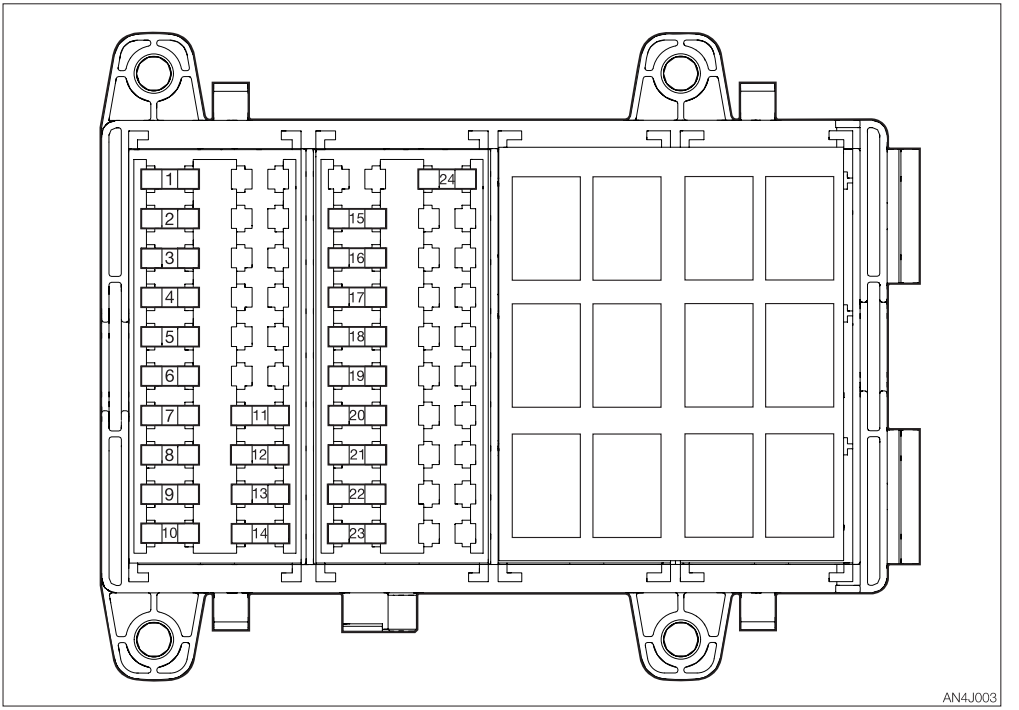

No.	Capacity	Symbol	Protected circuit	Fuse No.
1	25A		Fan switch	F1
2	10A		Air conditioner switch	F2
3	15A	OPT (2)	Option (2)	F3
4	15A	OPT (1)	Option (1)	F4
5	25A	CAB	Cab	F5
6	10A		Display	F6
7	10A		Controller, **travel alarm**	F7
8	20A		Safety lock lever	F8
9	10A		Wiper	F9
10	20A		Lights	F10
11	5A	OPT (12V)	Option (12V)	F11
12	15A		NOx sensor	F12

No.	Capacity	Symbol	Protected circuit	Fuse No.
13	5A		DEF sensor	F12
14	3A		Anti-theft	F11
15	15A		Controller	F29
16	10A		Display	F28
17	3A		Anti-theft	F27
18	25A		Fuel supply pump	F26
19	30A		ECU	F25
20	20A		Feed pump	F24
21	30A		SCR system	F23
22	10A		Starter switch	F22
23	10A		Horn	F21
24	10A	OPT (12V)	Option (12V)	F40

OPTIONAL EQUIPMENT MASS

OPTION	
Steel crawlers of 500-mm width (including shoe guide)	100 (220)
Segment rubber (including shoe guide)	185 (410)
Steel crawlers of 700-mm width (including shoe guide, steps and blade)	650 (1435)
Steel crawlers of 600-mm width (including shoe guide, steps and blade)	315 (695)
Blade for 700-mm width	30 (66)
Center guide	25 (55)
Float	15 (33)
Emergency shut-off valve (Arm)	10 (22)
Auxiliary 3rd + Auxiliary 4th.	45 (99)
Auxiliary 3rd	20 (44)
2-Piece boom (with adjust shut-off valve)	630 (1389)
No bucket	–380 (–838)
Front guard	55 (121)
No blade	–795 (–1753)
Long arm	70 (154)

Units: kg (lb)

*: Mass of optional equipment is added to the standard machine mass.
*: This table only contains the optional equipment of 10kg (20lb) or more in mass.

BIODEGRADABLE OIL

Biodegradable oil is a new type of hydraulic oil that is decomposed into carbon dioxide and water by microorganisms in the soil and water. It is highly safe for living organisms and offers advantages in term of environmental protection.

- Recommended biodegradable oil: Mobile EAL Envirosyn 46H (an ester synthetic oil) and Panolin HLP Synth 46 (an ester synthetic oil).
  When replacing the mineral oil with biodegradable oil, use either of the above brand oil.
  Note that there are oils of other brands, even among ester synthetic oils, which may damage O-rings, packings and seals.
- When switching from a mineral oil to a biodegradable oil, the parking brake torque decreases by about 30%.

REPLACING THE HYDRAULIC OIL WITH BIODEGRADABLE OIL

- A mixture of mineral oil and biodegradable oil or a mixture of different brands of biodegradable oils will result in a decrease in performance of the hydraulic oil, biodegradability and safety. The inside of the hydraulic oil system must be flushed (cleaned) before replacing. The residual mineral oil in the machine should be about 2% or less, as complying with the ISO 15380.
- This operation is dangerous and requires experience. Ask a Takeuchi sales or service dealer for help.

Flushing

To be performed by a Takeuchi sales or service outlet

1. Drain the hydraulic oil (mineral oil) from the hydraulic oil tank and clean the inside of the tank and suction strainer.
   Refer to “Replacing the hydraulic oil and cleaning the suction strainer”.
2. Remove the cylinder hoses and drain the hydraulic oil (mineral oil) from inside the cylinders.
3. Supply new biodegradable oil to the hydraulic oil tank.
4. Bleed the air from the hydraulic oil system.
5. Operate the hydraulic devices for 30 minutes.
6. Drain the biodegradable oil from the tank and cylinders.
7. Replace the hydraulic oil return filter with a new filter.
8. Repeat steps 3 and 4.
9. Operate the hydraulic devices for 30 minutes.
10. Drain the biodegradable oil from the tank and cylinders.
11. Repeat steps 3 and 4.
12. Operate the hydraulic devices for 1 hour.
13. Drain the biodegradable oil from the tank and cylinders.
14. Replace the return filter with a new filter.
15. Repeat steps 3 and 4.
16. Operate the hydraulic devices, then check for oil leakage.

There is no need to flush the hydraulic oil system when switching from biodegradable to mineral hydraulic oil.

CAB OPTIONS



1. Front guard (Level II: ISO 10262)
2. Rear light

OPERATING LEVER SWITCH KIT 1

HORN BUTTON

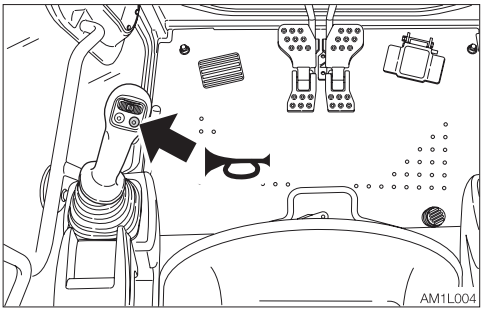

Press the button situated on the left operating lever to blow the horn.

DECELERATION BUTTON

⚠ WARNING

Before operating the deceleration button, set the operating lever to the neutral position and take your foot off the pedals. If the deceleration button is pressed while driving, the machine's operating speed will abruptly change to result in a dangerous situation.

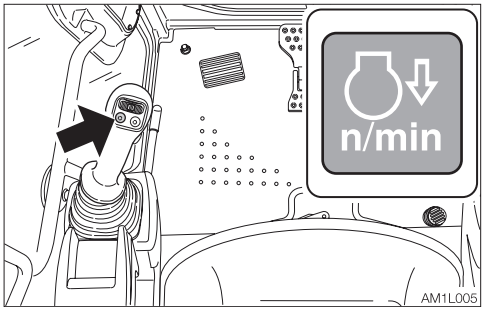

Press this button on the left operating lever to lower the engine speed to low idling. Press the button again to return to the engine speed set with the throttle controller. For safety reasons, it is designed that the deceleration function is activated to set the engine revolutions to low idling whenever the engine is started.
Cancel the deceleration mode by pressing the deceleration button as necessary.
Note: This deceleration button is capable of decreasing the engine speed and reducing the fuel consumption, with a simple operation, in a situation such as when little engine output is required and thus the operating or the travel levers are in neutral.

TRAVEL SPEED BUTTON

⚠ WARNING

When a load greater than a set value is applied during traveling in 2nd (high) speed, the speed will automatically slow down to 1st (low) speed. When the load becomes lighter, the speed will increase and return to 2nd (high) speed. It should be noted that the travel speed changes depending on the load condition (for machines with the automatic travel shift-down system).

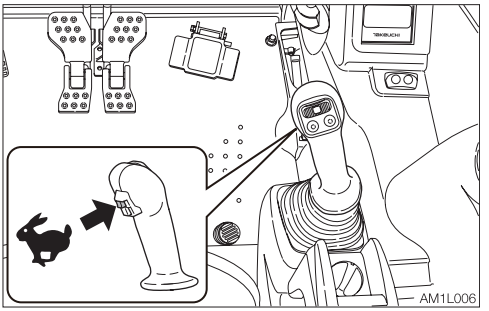

Press this switch to set the travel speed to 2nd (high) speed. Press it again to return to 1st (low) speed.

AUXILIARY 1ST SWITCHES

Auxiliary hydraulic buttons

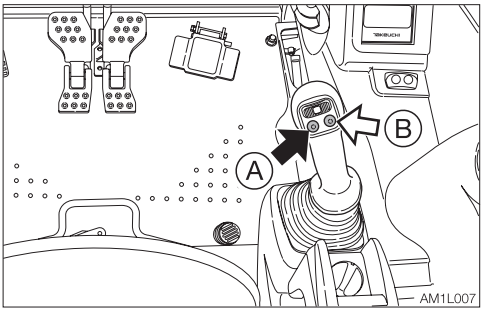

Press those buttons to control the flow of the oil in the first auxiliary hydraulic lines.

- Proportional control of the auxiliary hydraulic circuit is not possible.

(A).....Hydraulic oil flows to the left auxiliary line (a).

(B) .....Hydraulic oil flows to the right auxiliary line (b).

Slider switch (Proportional control)

Proportional control allows for slow-to-fast/ fast-to-slow movement of attachment. Example: If you move the slider switch half way, the attachment will move at approximately one-half the speed.

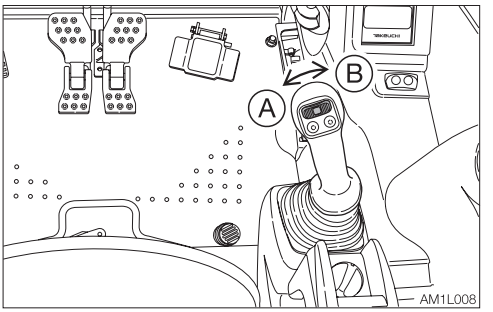

Move this switch to control the flow of the oil in the first auxiliary hydraulic lines.

(A).....Hydraulic oil flows to the left auxiliary line (a).

(B) .....Hydraulic oil flows to the right auxiliary line (b).

Refer to “Auxiliary hydraulic lines” on pages 2-98 to 2-102.

AUXILIARY 2ND/4TH SWITCH

Slider switch
(Proportional control)
Proportional control allows for slow-to-fast/ fast-to-slow movement of attachment.
Example: If you move the slider switch half way, the attachment will move at approximately one-half the speed.

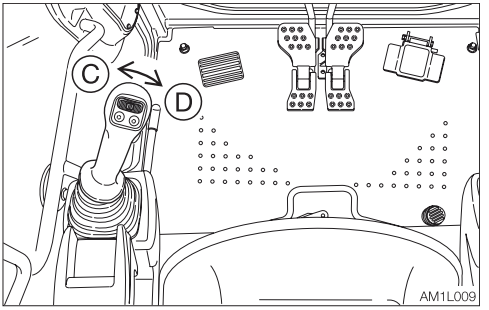

Move this switch to control the flow of the oil in the second auxiliary hydraulic lines.
(C): .....Hydraulic oil flows to the left auxiliary line (c).
(D): .....Hydraulic oil flows to the right auxiliary line (d).

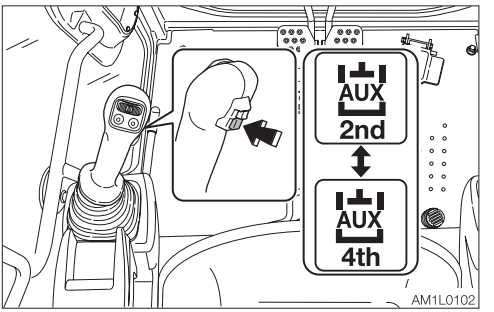

To use the auxiliary 4th hydraulic line, press the auxiliary 2/4 select button to change to the operation of the auxiliary 4th.
Refer to “Auxiliary hydraulic lines” on pages 2-98 to 2-102.

AUXILIARY 2/4 SELECT BUTTON

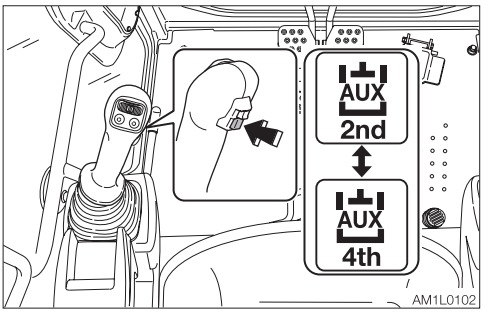

This switch is used to change from the second auxiliary operation to the fourth auxiliary operation.
Pressing this button displays the second auxiliary on the Multi-information display to indicate that the second auxiliary operation is enabled. Pressing this button again displays the auxiliary 4th on the Multi-information display to indicate that the auxiliary 4th operation is enabled.
The actual operation is performed with the auxiliary 2nd/4th switch (slider switch).

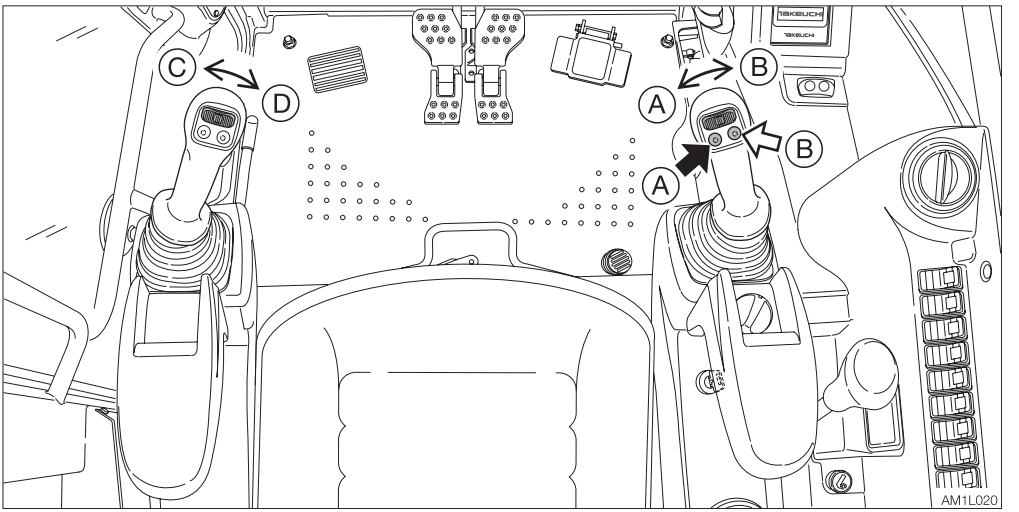

Operating

Press those buttons to control the flow of the oil in the first/second auxiliary hydraulic lines.

(A).....Hydraulic oil flows to left auxiliary line (a).

(B) .....Hydraulic oil flows to right auxiliary line (b).

(C) .....Hydraulic oil flows to left auxiliary line (c).

(D) .....Hydraulic oil flows to right auxiliary line (d).

Refer to “Auxiliary hydraulic lines” on pages 2-98 to 2-102.

Releasing the residual pressure

After the auxiliary hydraulic circuits have been used, pressure remains in the circuits. This is called the residual pressure. Release this residual pressure before disconnecting the lines.

Perform the residual pressure releasing within 10 minutes after the engine stopping.

1. Park the machine on a flat, rigid and safe ground.
2. Stop the engine.
3. Lower the safety lock lever to the unlocked position.
4. Turn the starter switch to the ON position.
5. Press the auxiliary hydraulic switches several times to release the residual pressure in the auxiliary hydraulic circuitry.

SELECTING A LEVER PATTERN

The operating pattern of the left and right operating levers can be changed.

⚠ WARNING

Before starting the engine, check the selector to see which operating pattern the left and right operating levers are set.

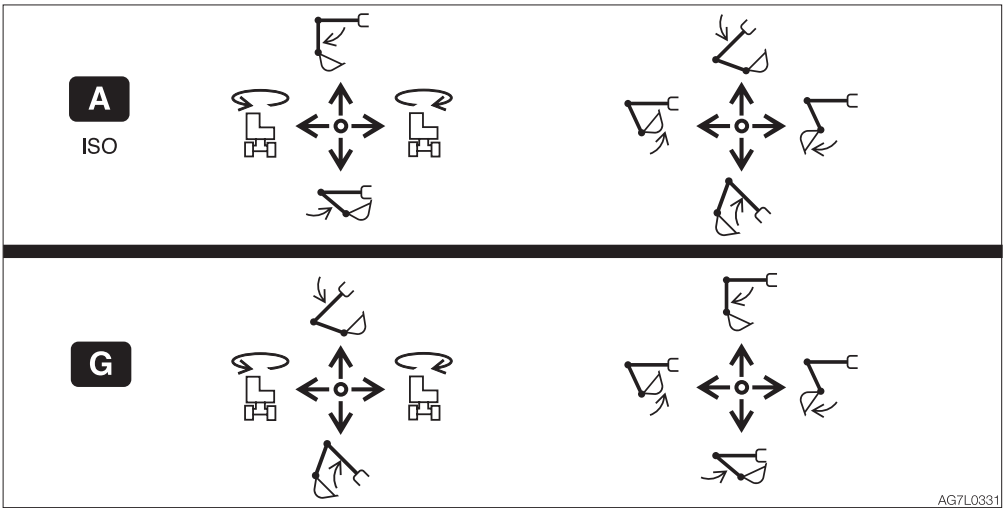

SWITCHING THE LEVER PATTERN

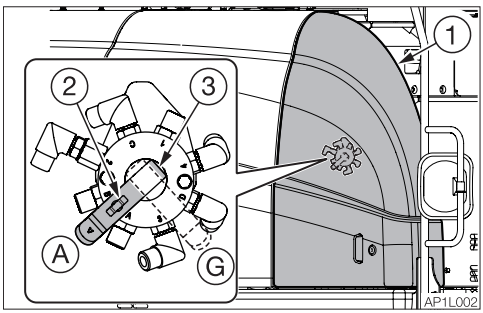

(A) : ISO pattern
(G) : G pattern

1. Park the machine on a flat and rigid ground, and stop the engine.
2. Fully open the cab door and fix it in place.
3. Remove the floor mat.
4. Open the front cover (1).
5. Tighten the wing bolt (2) and fasten the lever (3) in place.
6. Close the front cover (1).
7. Confirm the lever pattern.

TAKEUCHI SECURITY SYSTEM

The Takeuchi Security System is a system that allows only registered starter keys to be used for starting the engine.
The engine cannot be started with any unregistered or counterfeit starter keys. If a registered starter key is lost or stolen, you can set the system to delete the registered key information, so that the lost or stolen key cannot be used to start the engine. Although machine theft cannot be completely prevented, the system certainly helps reduce the risk of theft.

STARTER KEY

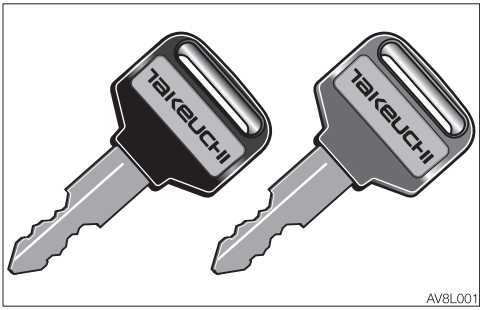

There are two types of starter key, red and black, which can be registered in the Takeuchi Security System.
The red key is the master key. The black key is the starting key.

STARTING THE ENGINE

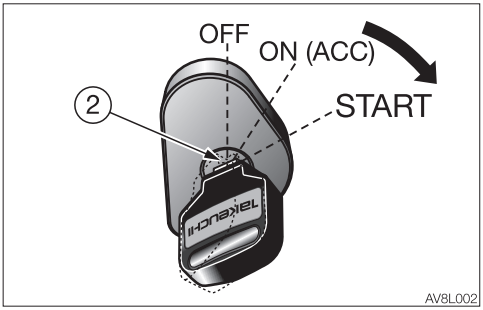

The engine can be started using the normal method with a registered BLACK key.
The engine cannot be started using the RED master key.
Refer to Chapter 3, “Starting and stopping the engine”.

If an attempt is made to start the engine with an unregistered key:

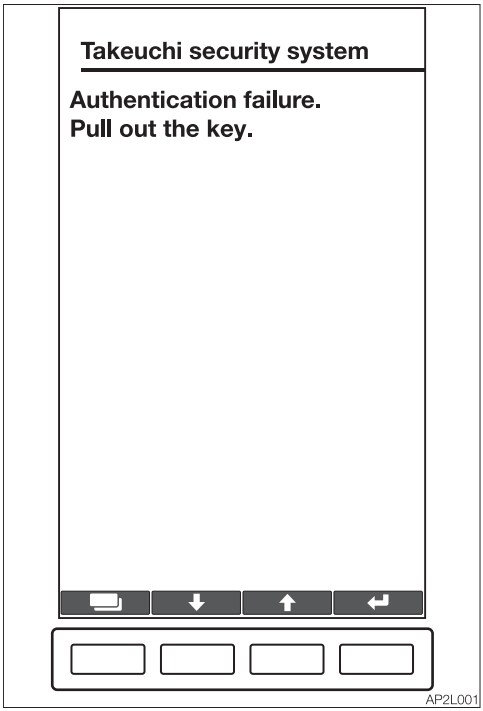

If an unregistered starter key is turned from the OFF to the ON (ACC) position, the message “Authentication failure” appears and the alarm starts sounding.
If this attempt is repeated five times in a row, the horn sounds for two minutes, and the engine cannot be started. The horn stops when the key is turned to the OFF position.

REGISTERING AND DELETING THE STARTER KEY

⚠ WARNING

- **Sit on the operator's seat.**
- **Raise the safety lock lever to the locked position.**
- **Clear all people from the machine and the area.**
- **Sound the horn to warn people around the machine.**

Registration may fail if the starter key is on a keyring or keychain; remove it before starting registration.
A malfunction could occur if multiple starter keys are brought near to the key cylinder. Be sure that no starter keys other than the correct key are near the key cylinder during registration.

Starter key registration procedure
For Steps 1 to 6 below, complete each step and proceed to the next one within five minutes. If no operation is performed for five minutes during this procedure, the system returns to the initial state.
From Step 7 onward, the system automatically ends the operation if no operation is performed for five minutes.

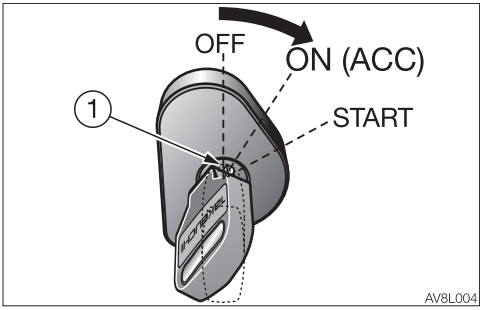

1. Insert the master key (1) into the starter switch and turn the key from the OFF to the ON (ACC) position.

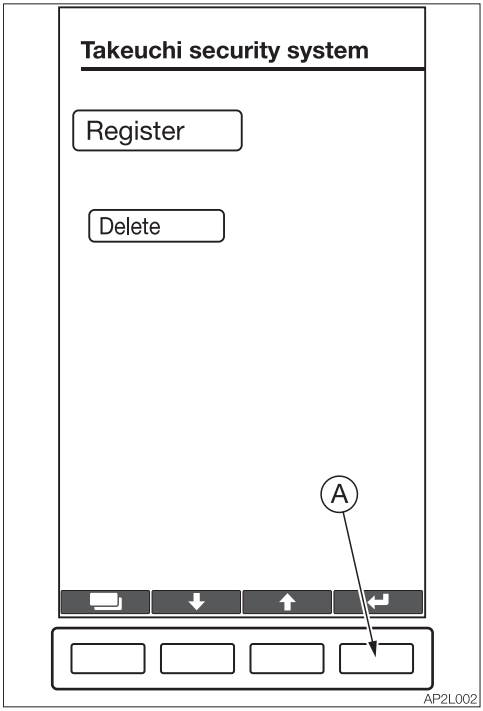

2. On the LCD, select “REGISTER” and press (A).

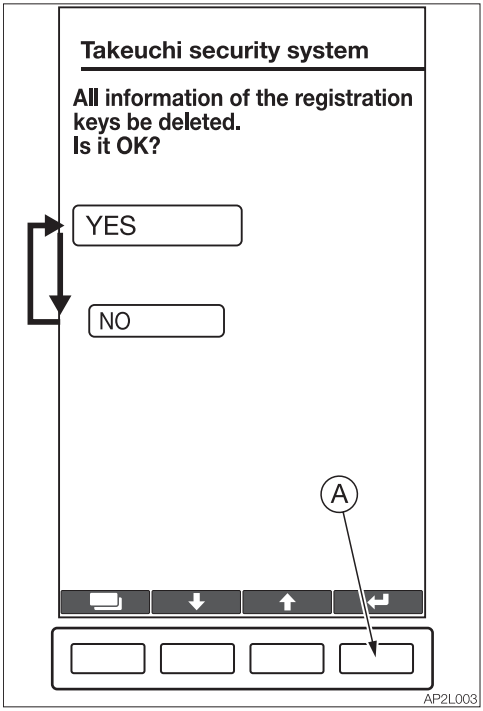

3. Select whether to delete all of the existing registration information.

   On the LCD, select “YES” and press (A): All registration information will be deleted; register a new key.
   On the LCD, select “NO” and press (A): A new starter key will be added to the existing registration information.

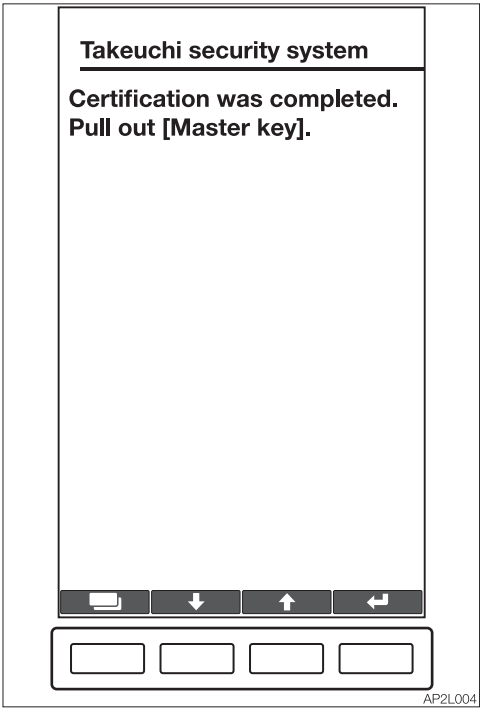

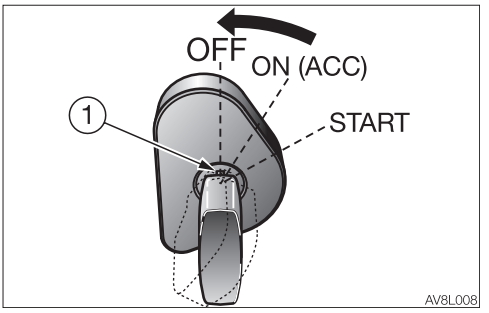

4. When the message “Certification was completed” appears on the LCD, turn the master key (1) from the ON (ACC) to the OFF position, and then remove it from the starter switch.
   The number (3) in the lower left indicates the number of starter keys currently registered (only for canopy). Up to 13 starter keys can be registered.

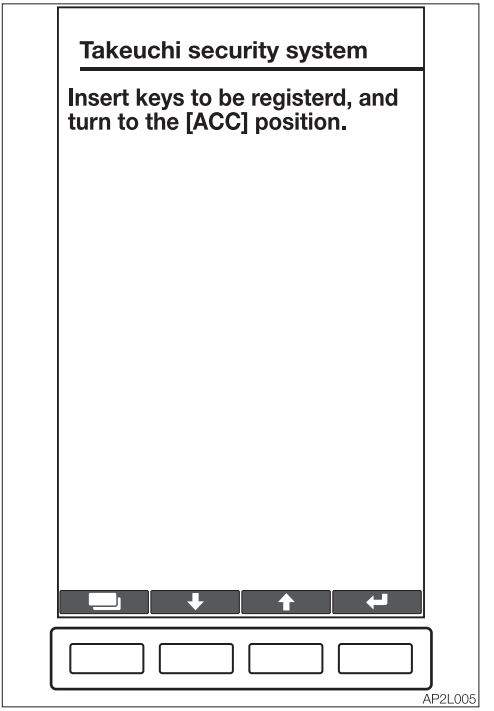

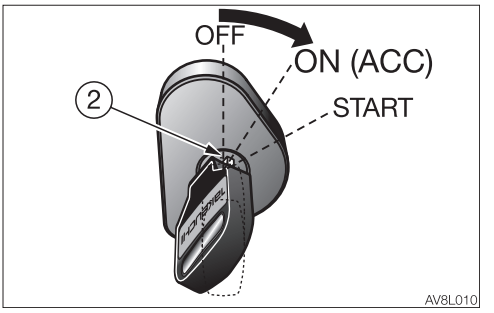

5. Insert the starter key (2) to be registered into the starter switch and turn the key from the OFF to the ON (ACC) position.

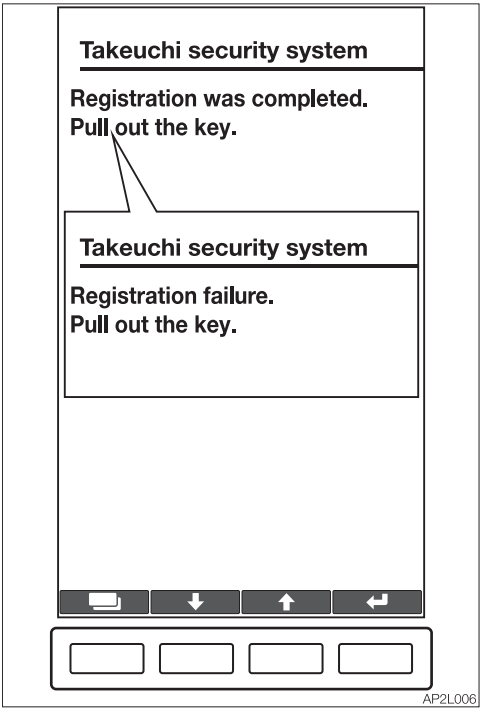

6. If the registration was successfully completed, the message “Registration was completed” appears. This means that the starter key (2) currently inserted has been registered.
   If the registration fails, the message “Registration failure” appears.

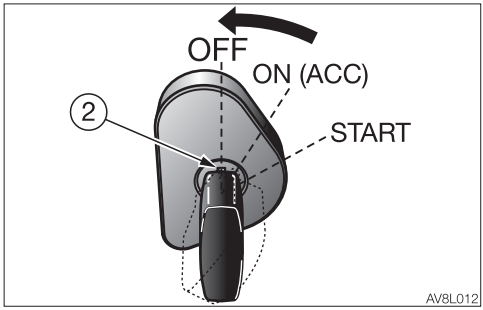

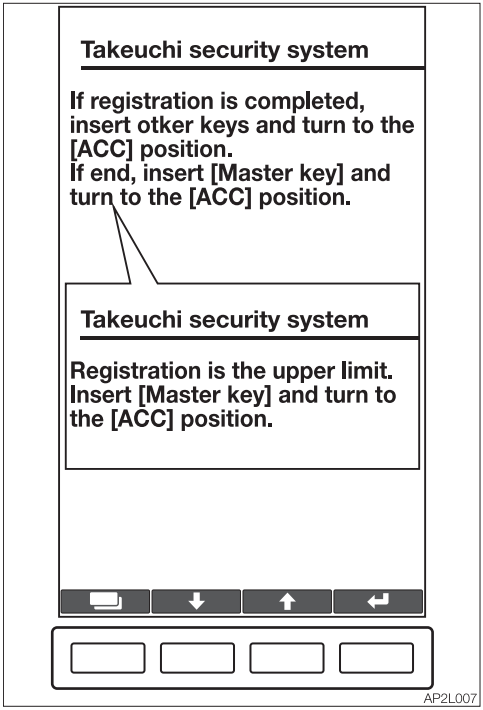

7. Turn the starter key (2) from the ON (ACC) to the OFF position, and then remove it from the starter switch.
   To continue registration, repeat the steps from Step 5.
   To end registration, proceed to Step 8.

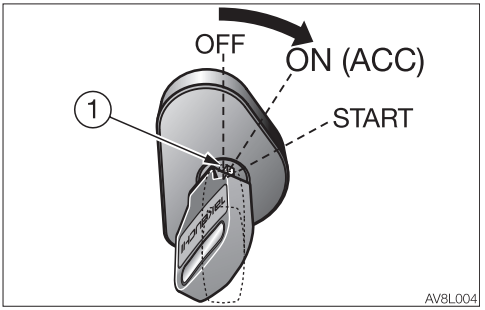

8. Insert the master key (1) into the starter switch and turn the key from the OFF to the ON (ACC) position. Or, wait for five minutes or more.

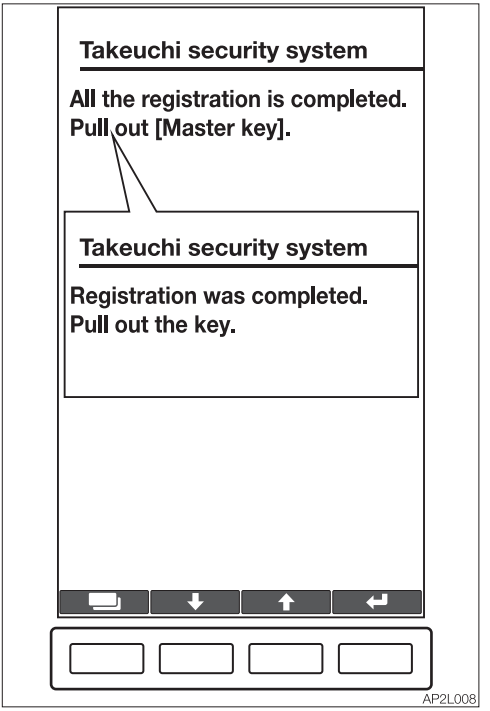

9. If any starter key has been registered, the message “All the registration is completed” appears. Turn the master key (1) from the ON (ACC) to the OFF position, and then remove it from the starter switch to complete the registration.
   If no starter key has been registered, the message “Registration failure” appears, and the registration information is returned to the initial state.

Deleting a registered starter key
The information of each registered starter key can be deleted to cancel its ability to start the engine.

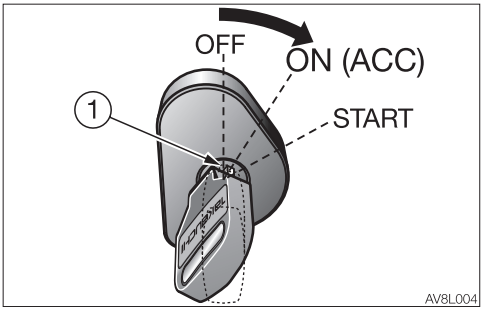

1. Insert the master key (1) into the starter switch and turn the key from the OFF to the ON (ACC) position.

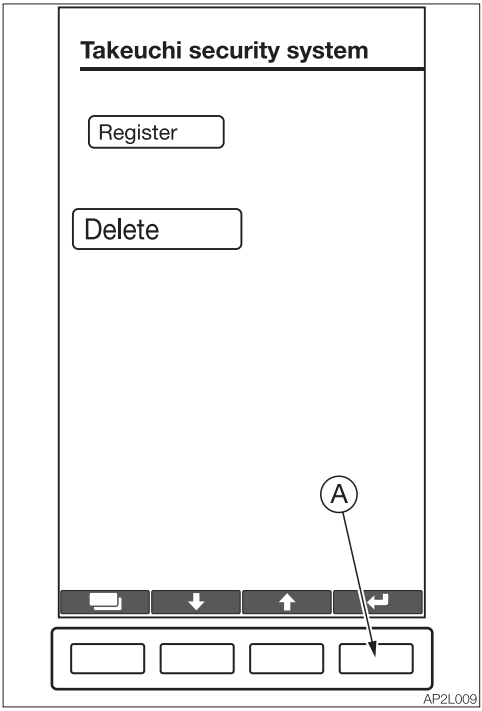

2. On the LCD, select “DELETE” and press (A).

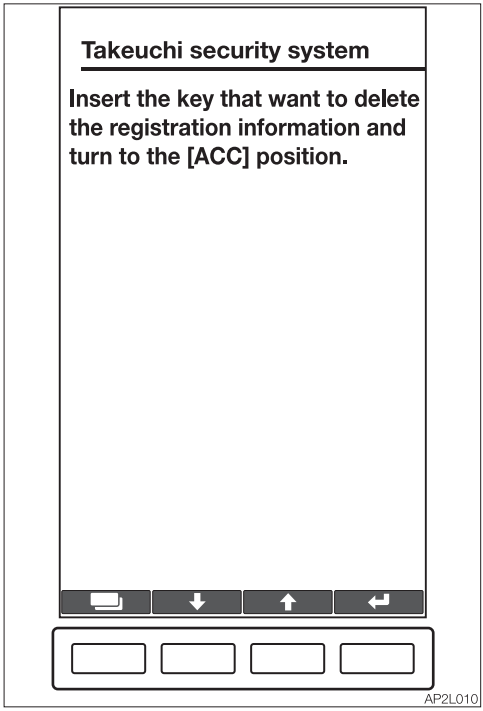

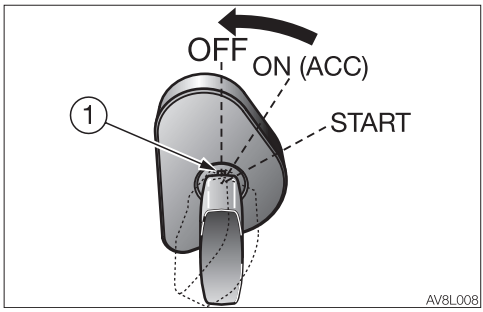

3. When the display shown as the illustration appears on the LCD, turn the master key (1) from the ON (ACC) to the OFF position, and then remove it from the starter switch.
Note: If the registered key is lost and you want to delete all registration information, please refer to STEP 3 (A) on page 8-25.

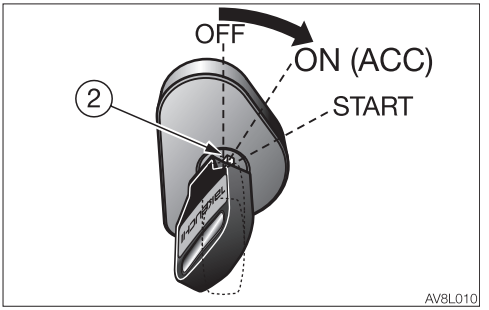

4. Insert the starter key (2) to be deleted into the starter switch and turn the key from the OFF to the ON (ACC) position.

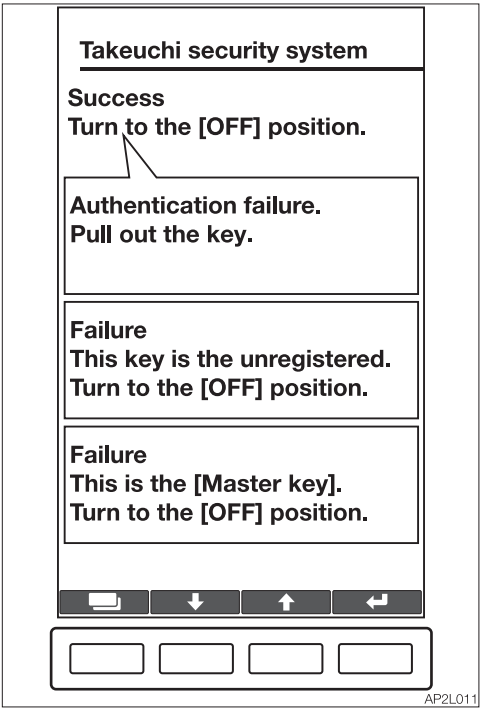

5. If the deletion is successful, the message "Success" appears. This means that the information registered for the starter key (2) currently inserted has been deleted. If the deletion fails, the message "Failure" or "Authentication failure" appears on the LCD. Remove the starter key, and then repeat the steps from Step 1 again.

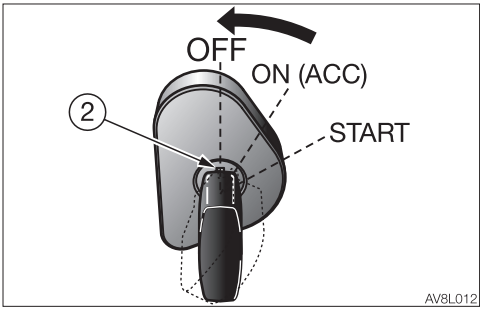

6. Turn the starter key (2) from the ON (ACC) to the OFF position, and then remove it from the starter switch.
To continue deletion, repeat the steps from Step 1.

IF THE MASTER KEY IS LOST

If you lose your master key, contact your service or sales dealer for assistance.

COUNTRIES WHERE THE SYSTEM CAN BE USED

To use the Takeuchi Security System, “radio wave authentication” must be obtained in the country where the system is to be used. The system can be used in the countries listed below, as of January 2017. Do not use the system in other countries. For details on how to disable the system, please contact your service or sales dealer for assistance.

Countries where the system can be used:
Ireland, Italy, UK, Estonia, Austria, Holland, Cyprus, Greece, Croatia, Sweden, Spain, Slovakia, Slovenia, Czech, Denmark, Germany, Hungary, Finland, France, Bulgaria, Belgium, Poland, Portugal, Malta, Latvia, Lithuania, Rumania, Luxemburg, Iceland, Norway, Liechtenstein, Switzerland, Turkey

TAKEUCHI FLEET MANAGEMENT (TFM)

⚠ CAUTION

- **Never disassemble the TFM. It may cause injury or failure.**
- **Any damage to the TFM device or wire harness may cause damage to the device and surrounding equipment.**



- Takeuchi Fleet Management (TFM) is a system that manages machine position information, operation information, and machine status using a communication device installed in the machine.
- Machines that support TFM are equipped with communication devices and are labeled as above.
- A communication contract is required to use TFM. Please contact our sales service for information regarding the contract.

IMPORTANT:

- **The TFM equipment has been tested and found to comply with the limits for a Class A and Class B digital device, pursuant to part 15 of the FCC Rules. These limits are designed to provide reasonable protection against signal interference when the equipment is operated in a commercial environment. This equipment generates, uses, and can emit radio frequency energy and, if not installed and used in accordance with the instruction manual, may cause signal interference to radio communications.**
- **Operation of this equipment in a residential area may cause signal interference in which the user may be required to take additional steps to correct the interference. To correct any interference issue, move the TFM equipped machine away from the affected device, or, if possible; relocate the affected device away from the TFM equipped machine.**
- **The TFM device uses mobile communication. Therefore, it may not function properly in places where the signal is weak (buildings, tunnels, underground, etc.).**
- **The TFM device complies with the RF radiation exposure limits of the FCC Rules. The product is tested for a separation distance of 0 mm from human bodies. It is advised for those with specific sensitive conditions to avoid close device-body exposure.**
- **Please be aware that storing a machine long-term may result in the loss of communication from the TFM device if its internal battery is drained.**
- **The TFM device consumes a small amount of machine battery power even when the key is in the OFF position. For extended storage, see “Maintenance during extended storage period” on page 5-83.**

Specification

Applicable machine models 514800502 or later
Applicable machine models 514900333 to 514900600

M8HZT-E (For Europe)

Frequency	Power
UMTS:	
900 MHz	0.316 W
1900 MHz	0.316 W
GSM:	
900 MHz	2 W
1800 MHz	2 W

M8LZT-E (For North America)

Frequency	Power
LTE:	
700 MHz	0.2 W
850 MHz	0.2 W
1700/2100 MHz (AWS)	0.2 W
1900 MHz	0.2 W
UMTS:	
850 MHz	0.224 W
1900 MHz	0.224 W
1700/2100 MHz (AWS)	0.224 W

Applicable machine models 514900601 or later

M7H (For Europe)

Frequency	Power
UMTS/HSPA:	
900 MHz	0.25 W
2100 MHz	0.25 W
GSM/GPRS:	
900 MHz	2 W
1800 MHz	1 W
GSM/EDGE:	
900 MHz	0.5 W
1800 MHz	0.4 W

M7L (For North America)

Frequency	Power
LTE Band:	
700 MHz	0.2 W
850 MHz	0.2 W
1700 MHz (AWS)	0.2 W
1900 MHz	0.2 W
UMTS Band:	
850 MHz	0.25 W
1900 MHz	0.25 W

First Published September 2017
Thirteenth Published June 2022

AP2EN012

OPERATOR'S MANUAL

TB2150R Hydraulic excavator

Edited and issued by TAKEUCHI MFG. CO., LTD.

ZTR Control Systems, LLC

955 Green Valley Road
London, Ontario, N6N 1E4
Tel: 1-519-452-1233
FAX: 1-519-452-7764

www.ztr.com
info@ztr.com

February 1, 2018

RE: M8HZT / M8HZT-E / M8HBZ / M8HBZ-E Radio Equipment Directives (RED)

To whom it may concern,

This letter is to confirm that ZTR products **M8HZT / M8HZT-E / M8HBZ / M8HBZ-E** sufficiently demonstrate compliance to the Radio Equipment Directives (RED). The M8HZT-E is a superset of functionality of these other three devices and thereby is represented of compliant performance for the other three models.

The results of these tests can be found in **EMC Test Report (EMC_SL17052501-CAL-004-TTU4531HEW)**, issued on June 20, 2017. The tests were carried out by a notarized 3rd party certification lab **Siemic**.

This Declaration of Conformity is issued under the sole responsibility of ZTR Control Systems (or the manufacturer)

Please direct any test results questions or concern to ZTR's Engineering Group for clarification.

Regards,

Brent Horne
Director of Product Development
ZTR Control Systems

ZTR Control Systems, LLC

955 Green Valley Road
London, Ontario, N6N 1E4
Tel: 1-519-452-1233
FAX: 1-519-452-7764

www.ztr.com
info@ztr.com

April 5, 2019

RE: M7H

To whom it may concern,

This letter is to confirm that ZTR product **M7H** sufficiently demonstrate compliance to CE and the Radio Equipment Directives (RED). The M7H satisfies all the technical regulations applicable to the product within the scope of Council Directives 2014/53/EU, 2015/35/EU and 2014/30/EU. The following tests were completed successfully.

EN 60950-1: 2006+A11: 2009+A1: 2010+A12: 2011+A2: 2013
EN62311:2008
ETSI EN 300 328 V2.1.1 (2016-05)
ETSI EN 303 413 V1.1.1 (2017-06)
Draft ETSI EN 301 489-52 V1.1.0 (2016-11)
Draft ETSI EN 301 489-17 V3.2.0 (2017-03)
Draft ETSI EN 301 489-1 V2.2.0 (2017-03)
Draft ETSI EN 301 489-19 V2.1.0 (2017-03)
EN 55032: 2015
ETSI EN 301 511 V12.5.1 (2017-03)
ETSI EN 301 908-1 V11.1.1 (2016-07)
ETSI EN 301 908-2 V11.1.2 (2017-08)

(Title(s) of regulations, standards, etc.)

All essential radio test suites have been carried out.

The tests were carried out by a notarized 3rd party certification lab MiCOM Labs inc.

This Declaration of Conformity is issued under the sole responsibility of ZTR Control Systems (or the manufacturer).

Please direct any test results questions or concern to ZTR's Engineering Group for clarification.

Regards,

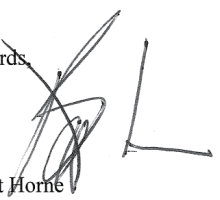

Brent Horne
Director of Product Development
ZTR Control Systems

<Cab>

ASAHI DENSO

6-2-1 Somejidai, Hamakita-ku, Hamamatsu, Shizuoka 434-0046, Japan

EU DECLARATION of CONFORMITY (DoC)

This declaration of conformity is issued under the sole responsibility of the manufacturer:

Name:	ASAHI DENSO CO.,LTD
Address:	6-2-1 Somejidai, Hamakita-ku, Hamamatsu, Shizuoka, 434-0046 Japan

We declare that the DoC is issued under our sole responsibility and belongs to the following product.

Object of the declaration:

Product Name	Immobilizer
Model Name	CZ156
Accessories	N/A

The object of the declaration described above is in conformity with the relevant Union harmonization legislation:

Radio Equipment (RE) Directive (2014/53/EU)

The following harmonized standards and technical specifications have been applied:

Health & Safety (Article 3.1(a)):	EN 60065: 2014
EMC (Article 3.1(b)):	EN 301 489-1 V2.1.1 EN 301 489-3 V2.1.1 (Final draft)
Radio Spectrum (Article 3.2):	EN 300 330 V2.1.1

Japan, Shizuoka	May 29, 2017	Tomohiro Yaguchi
Place of Issue:	Date of Issue:	Tomohiro Yaguchi Section chief Engineering Department

ASAHI DENSO
6-2-1 Somejidai, Hamakita-ku, Hamamatsu, Shizuoka 434-0046, Japan

UK DECLARATION of CONFORMITY (DoC)

This declaration of conformity is issued under the sole responsibility of the manufacturer:

Name:	ASAHI DENSO CO.,LTD.
Address:	6-2-1 Somejidai, Hamakita-ku, Hamamatsu, Shizuoka, 434-0046 Japan

We declare that the DoC is issued under our sole responsibility and belongs to the following product.

Object of the declaration:

Product Name	Immobilizer
Model Name	CZ156
Accessories	N/A

The object of the declaration described above is in conformity with the relevant statutory requirements:

STATUTORY INSTRUMENTS 2017 No. 1206 TELECOMMUNICATIONS (The Radio Equipment Regulations 2017)

The following designated standards and technical specifications have been applied:

Health & Safety (Regulation 6.1(a)):	EN 62368-1: 2014
EMC (Regulation 6.1(b)):	EN 301 489-1 V2.1.1 EN 301 489-3 V2.1.1 (Final draft)
Radio Spectrum (Regulation 6.2):	EN 300 330 V2.1.1

Signed for and on behalf of:

Shizuoka, Japan	September 8, 2021	Tomohiro Yaguchi
Place of Issue:	Date of Issue:	Tomohiro Yaguchi Section chief Engineering Department

Declaration of Conformity

We herewith declare that the following named machine, based on its conception and design, and in the form brought into service is in accordance with the relevant, basic safety and health requirements of the following EU directives. In case of any alteration of the machine not coordinated with us, this certificate loses its validity.

Designation of the machine	Hydraulic Excavator
Manufacturer	TAKEUCHI MFG. CO., LTD 205 Uwadaira, Sakaki-machi, Hanishina-gun, Nagano 389-0605, Japan

Model	TB2150R <S/N 514800502 ~>
Engine type	CFXI85BU (e1*97/68RA*2012/46* 0812*Δ)
Engine performance	85 kW @ 2000 rpm

The machine is in accordance with the requirements of EU directives:

1) Machine Directive: 2006/42/EC and appendix
2) Electromagnetic Compatibility-Regulation: 2014/30/EU and appendix.
3) Noise Directive: 2000/14/EC (Evaluation procedure according to appendix VI), 2005/88/EC and appendices.
4) Regulations on engine emissions: 97/68/EC as last amended by Directive 2012/46/EC.

Harmonized norms: EN474-1:2006+A4:2013, EN474-5:2006+A3:2013

Compiler of the technical files:
Daniel Bailli
Parc d'Activités des Béthunes
3, avenue de la Mare 95310 SAINT OUEN L'AUMONE,
CS 29258 – SOA

Issued in Sakaki, Japan
Akio Takeuchi, Chairman

Declaration of Conformity

We herewith declare that the following named machine, based on its conception and design, and in the form brought into service is in accordance with the relevant, basic safety and health requirements of the following EU directives. In case of any alteration of the machine not coordinated with us, this certificate loses its validity.

Designation of the machine	Hydraulic Excavator
Manufacturer	TAKEUCHI MFG. CO., LTD 205 Uwadaira, Sakaki-machi, Hanishina-gun, Nagano 389-0605, Japan

Model	TB2150R <S/N 514900333 ~>
Engine type	CFVI85BU (e1*97/68RA*2012/46* 0849*Δ)
Engine performance	85 kW @ 2000 rpm

The machine is in accordance with the requirements of EU directives:

1) Machine Directive: 2006/42/EC and appendix
2) Electromagnetic Compatibility-Regulation: 2014/30/EU and appendix.
3) Noise Directive: 2000/14/EC (Evaluation procedure according to appendix VI), 2005/88/EC and appendices.
4) Regulations on engine emissions: 97/68/EC as last amended by Directive 2012/46/EC.

Harmonized norms: EN474-1:2006+A6:2019, EN474-5:2006+A3:2013

Compiler of the technical files:
Daniel Bailli
Parc d'Activités des Béthunes
3, avenue de la Mare 95310 SAINT OUEN L'AUMONE,
CS 29258 – SOA

Issued in Sakaki, Japan
Akio Takeuchi, Chairman

Declaration of Conformity

We herewith declare that the following named machine, based on its conception and design, and in the form brought into service is in accordance with the relevant, basic safety and health requirements of the following EU directives. In case of any alteration of the machine not coordinated with us, this certificate loses its validity.

Designation of the machine	Hydraulic Excavator
Manufacturer	TAKEUCHI MFG. CO., LTD 205 Uwadaira, Sakaki-machi, Hanishina-gun, Nagano 389-0605, Japan

Model	TB2150R <S/N 514900459 ~>
Engine type	C5VI85BU (e1*2016/1628*2016/1628EV5/D*0001*Δ)
Engine performance	85 kW @ 2000 rpm

The machine is in accordance with the requirements of EU directives:

1) Machine Directive: 2006/42/EC and appendix
2) Electromagnetic Compatibility-Regulation: 2014/30/EU and appendix.
3) Noise Directive: 2000/14/EC (Evaluation procedure according to appendix VI), 2005/88/EC and appendices.
4) Regulations on engine emissions: Regulation (EU) 2016/1628, as last amended by Regulation 2016/1628.

Harmonized norms: EN474-1:2006+A6:2019, EN474-5:2006+A3:2013

Compiler of the technical files:
Daniel Bailli
Parc d'Activités des Béthunes
3, avenue de la Mare 95310 SAINT OUEN L'AUMONE,
CS 29258 – SOA

Issued in Sakaki, Japan
Akio Takeuchi, Chairman

Declaration of Conformity

We herewith declare that we take full responsibility that the following named machine, based on its conception and design, and in the form brought into service is compliant with the relevant, basic safety and health requirements of the following (UK) enactments. In case of any alteration of the machine not coordinated with us, this certificate loses its validity.

Designation of the machine	Hydraulic Excavator
Manufacturer	TAKEUCHI MFG. CO., LTD 205 Uwadaira, Sakaki-machi, Hanishina-gun, Nagano 389-0605, Japan

Model	TB2150R <S/N 5149×××××>
Engine type	C5VI85BU (e1*2016/1628*2016/1628EV5/D*0001*Δ)
Engine performance	85 kW @ 2000 rpm

The machine is compliant with the following UK enactments:

1) Supply of Machinery (Safety) Regulations 2008 (S.I. 2008/1597)
2) Electromagnetic Compatibility Regulations 2016 (S.I. 2016/1091)
3) Noise Emission in the Environment by Equipment for use Outdoors Regulations 2001 (S.I. 2001/1701)

And the Designated Standards referred to and adopted therein and particularly EN474-1:2006+A6:2019, EN474-5:2006+A3:2013

Compiler of the technical files:
Daniel Bryning (Product Manager)
TAKEUCHI MFG. (UK) Ltd.
Unit E2B, John Boyd Dunlop Drive
Kingsway Business Park Rochdale OL16 4NG

Issued in Sakaki, Japan
Akio Takeuchi, Chairman



WARNING: Breathing diesel engine exhaust exposes you to chemicals known to the State of California to cause cancer and birth defects or other reproductive harm.

- Always start and operate the engine in a well-ventilated area.
- If in an enclosed area, vent the exhaust to the outside.
- Do not modify or tamper with the exhaust system.
- Do not idle the engine except as necessary.

For more information go to www.P65warnings.ca.gov/diesel.



WARNING:

Cancer and Reproductive Harm –
www.P65Warnings.ca.gov

About the emission warranty statements
Please view the DEUTZ warranty statements which are accessible on the official DEUTZ website:
https://www.deutz.com/en/about-us/warranty-statement/



05792-00033