OPERATOR'S MANUAL

Original instructions

TB2150 Serial No. 514600636~

TB2150 Serial No. 514700252~

Book No. AN5EN015

OENTB2150_G-XP

HYDRAULIC EXCAVATOR

TAKEUCHI

WARNING Read and understand these instructions.
Failure to do so can cause injury or death.

SAFETY ALERT SYMBOL



This symbol represents the safety alert. The message that follows the symbol contains important information about safety.
Read and understand the message to avoid personal injury or death.

It is the owner or employer's responsibility to fully instruct each operator in the proper and safe operation of all equipment. All persons using this machine should thoroughly familiarize themselves with the contents of this manual.

All operators must be instructed on the proper functions of the excavator before running the machine.

Learn and practice correct use of the machine controls in a safe, clear area before operating this machine on a job site.

⚠ WARNING

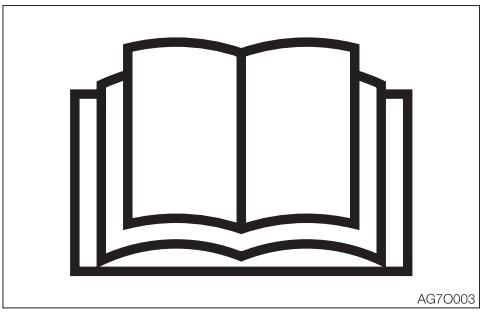

Improper operation, inspection and maintenance of this machine can cause injury or death.
Read and understand this manual before performing any operation, inspection or maintenance on this machine.

Always store this manual near at hand preferably on the machine itself. If it should be lost or damaged, immediately order a new one from your Takeuchi dealer.
When transferring ownership of this machine, be sure to hand this manual to the next owner.

Takeuchi supplies machines complying with the local regulations and standards of the country of export. If your machine has been purchased in another country or from a person or company of another country, it may not have the safety devices or safety standards required for use in your country. Should you have any question about whether your machine complies with the regulations and standards of your country, contact a Takeuchi dealer.

SIGNAL WORDS

Safety messages appearing in this manual and on machine decals are identified by the words “DANGER”, “WARNING” and “CAUTION”. These signal words mean the following:

⚠ DANGER

DANGER indicates a hazard with a high level of risk which, if not avoided, will result in death or serious injury.

⚠ WARNING

WARNING indicates a hazard with a medium level of risk which, if not avoided, could result in death or serious injury.

⚠ CAUTION

CAUTION indicates a hazard with a low level of risk which, if not avoided, could result in minor moderate injury.

IMPORTANT: The word IMPORTANT is used to alert operators and maintenance personnel about situations which could result in damage to the machine and its components.

It is impossible to foresee every possible circumstance that might involve a potential hazard. The warnings in this manual or on the machine can not cover all possible contingencies. You must exercise all due care and follow normal safety procedures when operating the machine so as to ensure that no damage occurs to the machine, its operators or other persons.

FOREWORD

This manual describes operation, inspection and maintenance of the machine, as well as safety instructions to be heeded during these operations.
If you have any questions about the machine, please contact a Takeuchi sales or service outlet.

- Some details in this manual may differ from those provided in the machine you are using.
- Please note that the information and specifications in this manual are subject to change without prior notice.

MANUAL STORAGE COMPARTMENT

A compartment for storing this manual is provided at the position shown on the diagram below.

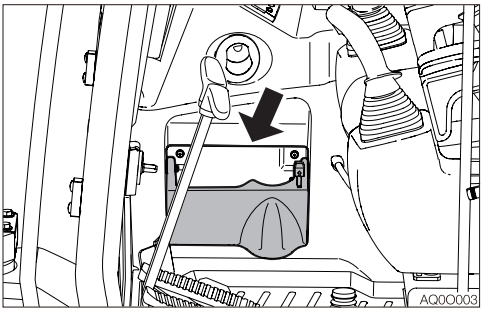

1. After using the manual, place it in the plastic pouch and store it back in the manual storage compartment.

SERIAL NUMBERS

IMPORTANT: Do not remove the machine name plate with the serial number. Check the serial numbers of the machine and engine and write them down in the spaces below.

Machine number:

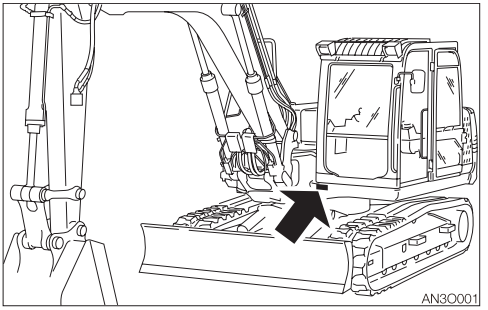

Engine number:

<Applicable machine models 514600636 or later>

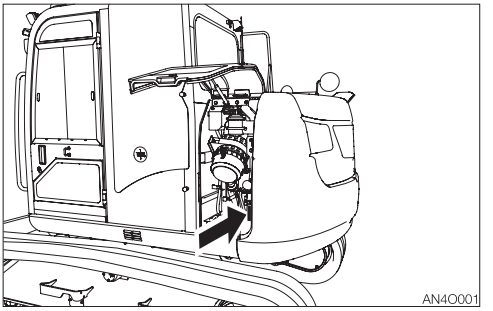

<Applicable machine models 514700252 or later>

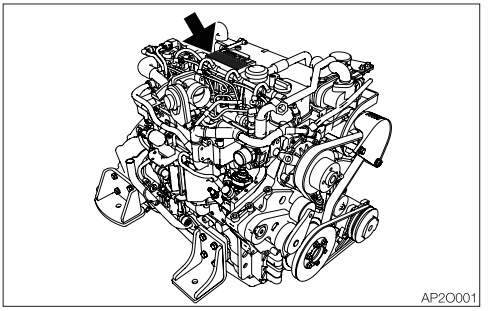

MACHINE DESCRIPTION

FRONT, REAR, LEFT AND RIGHT

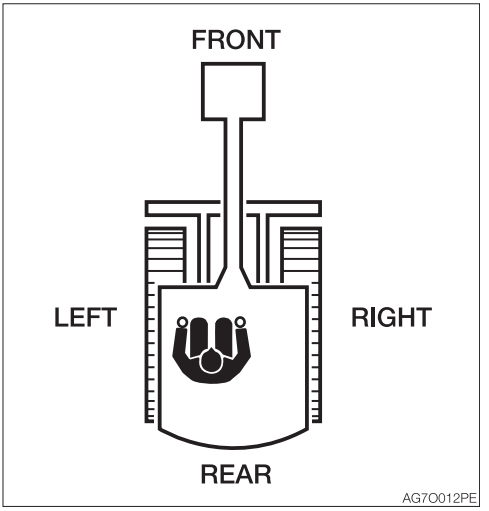

This manual refers the front, rear, left and right of the machine as seen when sitting in the operator's seat with the dozer blade visible to the front.

DESIGNATED OPERATIONS

Use this machine primarily for the following operations:
- Excavation
- Digging ditches
- Digging side ditches
- Leveling
- Loading

BREAK-IN PERIOD

When the machine is new, operate the machine for the first 100 hours (as indicated on the hour meter) by following the instructions below.
Using a new machine without a break-in period will lead to quicker deterioration of machine performance and may shorten the machine's service life.
- Sufficiently warm up the engine and hydraulic oil.
- Avoid heavy loads and rapid operations. Operate with a load of about 80% the maximum load.
- Do not abruptly start up, accelerate, change directions, or stop unless necessary.

NOTES ON READING THIS MANUAL

Please note that the descriptions and diagrams included in this manual may not be applicable to your machine.
The numbers used in the illustration are with circles around them. The same numbers appear between the parentheses in the text. (Example: ① → (1))

Symbols used in this manual
The symbols used in this manual have the following meanings.
⃠, ✕ ..... Prohibition
..... Lock
..... Unlock

ABBREVIATION USED IN THIS MANUAL

The abbreviations used in this manual are described below.

DPF ..... Diesel Particulate Filter
PM ..... Particulate Matter
SCR ..... Selective Catalytic Reduction
DEF ..... Diesel Exhaust Fluid
AdBlue® . Registered trademark of the Verband der Automobilindustrie e.V. in Germany.
ECU ..... Engine Control Unit
DQC ..... DEUTZ Quality Class

CONTENTS

Introduction 0-2

Machine description 0-4

Safety 1-1

General precautions 1-2
Precautions when preparing 1-8
Precautions when starting 1-12
Precautions when operating 1-15
Precautions when stopping 1-26
Precautions when transporting 1-27
Precautions on maintenance 1-29
Safety signs (decals) 1-43

Controls 2-1

Names of components 2-2
Covers 2-4
- Starter key 2-4
- Front covers (tool box) 2-4
- Front cover (for maintenance) 2-5
- Center cover 2-5
- Fuel filler port 2-6
- DEF/AdBlue® refill port 2-6
- Right side cover 2-7
- Left side cover 2-8
- Engine hood 2-8
- Maintenance cover 2-9

Cab 2-10
- Cab door 2-10
- Front window 2-11
- Lower front window 2-12
- Side window 2-13
- Emergency exit 2-13

Seat and seat belt 2-14
- Seat 2-14
- Seat belt 2-15
- Air Suspension Seat 2-16

Multi-information display 2-20
- Home screen 2-20
- Warning lamps 2-21
- Indicators 2-25
- Screen control key 2-30
- Screen navigation 2-32
- Switching images 2-46

Switches 2-49
- Starter switch 2-49
- Engine shutdown switch 2-49
- Throttle controller 2-49
- Horn button 2-50
- Deceleration button 2-50
- Travel speed button 2-51
- Auxiliary 1st switches 2-52
- Auxiliary 2nd/4th switch 2-53
- Third auxiliary hydraulic switch and button 2-54
- Auxiliary 2/4 select button 2-54
- Third auxiliary hard-lock switch (If equipped) 2-54
- Wiper switch 2-54
- Washer switch 2-55
- Automatic deceleration switch 2-55
- ECO/Highland mode switch 2-56
- Detent mode switch (Auxiliary 1st) 2-57
- Light switch 2-57
- Lift overload warning switch 2-58
- Beacon lamp switch 2-58
- Auxiliary 1st auto tank switch (option) 2-59
- Standstill regeneration/Stop switch 2-60

Levers and Pedals 2-62
- Safety lock lever 2-62
- Operating levers 2-62
- Blade lever 2-63
- Travel levers/pedals 2-64
- Boom swing pedal 2-65

Accessories 2-66
- Air conditioner 2-66
- Cup holder 2-73
- Interior light 2-74
- 12 V power socket 2-75
- 24 V external power sockets 2-75
- Radio 2-76
- Radio (Digital Audio Broadcasting not supported) 2-80
- Radio (Digital Audio Broadcasting supported) 2-88
- Auxiliary hydraulic lines 2-100
- Operating the machine with an accumulator 2-106
- Lifting safety device 2-107
- Fuel Supply Pump 2-108
- USB port (If equipped) 2-109
- Engine auto stop 2-109
- Mirrors 2-110
- Rear view camera and side view camera 2-112
- 270-degree view camera system (If equipped) 2-113
- Auto camera mode 2-113

Operation 3-1

Before starting operation 3-2
Getting on or off the machine.....3-2
Walk-around inspection 3-2
Daily inspection.....3-2
Starting and stopping the engine 3-3
Before starting the engine.....3-3
Starting the Engine 3-4
Warming up the engine.....3-6
Stopping the engine 3-6
Operating the machine 3-8
Lever pattern (ISO pattern).....3-8
Lever pattern (G pattern) (If equipped)..3-9
Warming up the machine (hydraulic oil).....3-10
Inspection after warm-up.....3-11
Operating the travel levers/pedals.....3-12
Stopping travel 3-15
Operating the working equipment.....3-16
Operating procedures.....3-18
Prohibited operations.....3-18
Cautions on operating 3-22
Cautions on traveling on slopes 3-24
Getting out of mud 3-26
Operations possible with this machine.....3-27
Parking the machine.....3-30
Parking.....3-30
Inspection and checks after stopping the engine.....3-31
Handling in cold climates.....3-32
Preparing for cold climates 3-32
Cautions after operations.....3-32
After the cold climate.....3-33
Handling rubber crawlers.....3-34
Prohibitions.....3-34
Cautions.....3-35
Preventing the rubber crawlers from coming off 3-36
Standstill regeneration 3-38
Handling the engine.....3-41
Prohibitions.....3-41
Cautions.....3-41
Diesel fuel.....3-41

Transport 4-1

Loading and unloading 4-2
Hoisting the machine.....4-4
Securing the machine.....4-6

Maintenance.....5-1

General.....5-2
Maintenance overview 5-2
Cautions on maintenance 5-2
Service data 5-4
Fuel and lubricant table.....5-4
Regularly replace the hydraulic oil 5-8
Handling of DEF/AdBlue® 5-9
List of consumables.....5-10
List of tools (If equipped).....5-11
List of tightening torques 5-12
Safety-critical parts.....5-14
Maintenance list.....5-16
Walk-around inspection 5-20
Inspecting by opening the engine hood and covers.....5-20
Inspecting by walking around the machine.....5-21
Inspecting while sitting in the operator's seat.....5-21
Daily inspection (every 10 hours).....5-22
Inspecting and replenishing the coolant 5-22
Inspecting and replenishing the engine oil 5-24
Cleaning the dust screen 5-25
Inspecting the pre-fuel filter and draining 5-26
Inspecting the fuel level.....5-27
Inspecting the hydraulic oil tank level and replenishing 5-28
Inspecting and cleaning the air cleaner 5-30
Lubricating the working equipment....5-32
Checking the DEF/AdBlue® level and refilling 5-33
After the initial 50 hours (only for new machines).....5-36
Replacing the hydraulic oil return filter 5-36
Replacing the pilot line filter.....5-37
Inspecting and adjusting the compressor belt (AC).....5-38
Every 50 hours 5-40
Inspecting and adjusting the crawler tension 5-40
Draining the water from the fuel tank..5-42
Inspecting the battery fluid level and replenishing 5-43
After the initial 250 hours

(only for new machines) 5-46
Replacing the slew motor gear oil 5-46
Replacing the travel motor gear oil..... 5-47
Every 250 hours 5-48
Inspecting the slew motor gear oil..... 5-48
Cleaning the cooler fins..... 5-49
Inspecting and adjusting the compressor belt (AC) 5-49
Cleaning the air filters (AC) 5-50
Cleaning the condenser (AC) 5-51
Inspecting the refrigerant (gas) level (AC) 5-52
Every 500 hours 5-54
Lubricating the slew bearing 5-54
Replacing the engine oil and the oil filter 5-55
Inspecting the concentration of coolant additive 5-56
Inspecting the slew pinion gear..... 5-57
Every 1000 hours 5-58
Replacing the hydraulic oil return filter 5-58
Replacing the pilot line filter..... 5-58
Replacing the slew motor gear oil 5-58
Replacing the travel motor gear oil..... 5-58
Replacing the engine cooling system . 5-59
Replacing the air cleaner element 5-61
Replacing the air breather filter..... 5-62
Replacing the fuel filters 5-62
Replacing the DEF/AdBlue® supply module filter..... 5-64
Inspecting and adjusting the V-rib belt 5-64
Inspecting the engine installation condition 5-64
Inspecting the low-temperature starting device 5-64
Every 2000 hours 5-65
Inspecting the accumulator..... 5-65
Every 3000 hours 5-67
Replacing the V-rib belt..... 5-67
Every 4000 hours 5-68
Replacing the hydraulic oil and cleaning the suction strainer 5-68
When required..... 5-71
Replacing the bucket teeth and the side cutters..... 5-71
Replacing the bucket..... 5-73
Adjusting the gap between the bucket and arm (If equipped) 5-76
Inspecting and replenishing the windshield washer fluid..... 5-77
Lubricating the levers and pedals..... 5-78
Inspecting the rubber crawlers..... 5-79
Replacing the rubber crawlers 5-80
Replacing the diesel particulate filter <Applicable machine models 514700252 or later>..... 5-81
Every 2 years..... 5-82
Replacing the receiver dryer..... 5-82
Maintenance during extended storage period..... 5-83
Storage procedures..... 5-83

Troubleshooting 6-1

Symptoms that are not malfunctions 6-2
If the engine overheats..... 6-3
If the battery goes dead..... 6-4
If a fuse blows 6-7
Inspecting and replacing the fuse..... 6-7
Inspecting the fusible link..... 6-10
Restarting after adding fuel..... 6-11
Bleeding air from the fuel system 6-11
Restarting when the DEF/AdBlue® level is low or the tank is empty 6-12
If a warning lamp flashes 6-13
Vehicle error code list..... 6-16
Engine error code list..... 6-18
Other symptoms..... 6-34
Lowering the boom to the ground 6-37
Towing..... 6-38
If the cab is damaged..... 6-39
Exhaust gas control system error..... 6-40
Error code list 6-40
NOx control diagnostic system (NCD) 6-46
Particulate control diagnostic system (PCD) 6-46
Limiting the engine output..... 6-47

Specifications 7-1

Basic Specifications..... 7-2
Machine dimensions..... 7-4
Operating ranges..... 7-6
Lifting Capacities 7-8

Options 8-1

General precautions 8-2
Safety precautions..... 8-2
Cautions when installing attachments .. 8-2
Cautions when operating attachments. 8-3
Attachment combination table 8-4

Selecting a lever pattern 8-5
Switching the lever pattern 8-5
Hydraulic breaker 8-6
Cautions on operating 8-6
Replacing the hydraulic oil regularly 8-8
Travel alarm 8-9
Optional equipment mass 8-12
Biodegradable oil 8-13
Replacing the hydraulic oil with biodegradable oil 8-13
Cab options 8-14
Operating lever switch kit 1 8-15
Horn button 8-15
Deceleration button 8-15
Travel speed button 8-16
Auxiliary 1st switches 8-17
Auxiliary 2nd/4th switch 8-18
Auxiliary 2/4 select button 8-19
Takeuchi Security System 8-22
Starter key 8-22
Starting the engine 8-23
Registering and deleting the starter key 8-24
If the master key is lost 8-31
Countries where the system can be used 8-31
Takeuchi Fleet Management (TFM) 8-32

SAFETY



GENERAL PRECAUTIONS

It is your responsibility to observe all pertinent laws and regulations and to follow the manufacture's instructions on machine operation, inspection and maintenance.

Virtually all accidents occur as the result of a failure to observe basic safety rules and precautions.
Most accidents can be prevented by identifying the potentially hazardous situations beforehand.
Read and understand all safety messages which describe how to prevent accidents.
Do not operate the machine until you are sure that you have gained a proper understanding of its operation, inspection and maintenance.

Observe all safety rules

- Operation, inspection and maintenance of this machine must be performed only by a trained and qualified person.
- All rules, regulations, precautions and safety procedures must be understood and followed when performing operation, inspection and maintenance of this machine.
- Do not perform any operation, inspection and maintenance of this machine when under the adverse influence of alcohol, drugs, medication, fatigue, or insufficient sleep.

When a problem is found on the machine

If any problem (noise, vibration, smell, disorder of instrument, smoke, oil leak, wrong indication of alarm or unusual indication in the multi-information display, etc.) is detected during the operation or inspection and maintenance of the machine, immediately inform your sales or service dealer and take proper actions. Do not operate the machine until the trouble is cleared.

Operating temperature range

To maintain the performance of machine and to prevent it from early wear, observe the following operating conditions.

- Do not operate the machine if the ambient temperature is higher than +45°C (+113°F) or lower than –15°C (+5°F).
  - If operated at an ambient temperature of higher than +45°C (+113°F), the engine may overheat and cause the engine oil to degrade. Also, the hydraulic oil may become very hot, causing damage to the hydraulic equipment.
  - If operated at an ambient temperature of lower than –15°C (+5°F), the parts made of rubber such as gaskets may get hardened to cause an early wear or damage to the machine.
  - If the machine is to be used outside the ambient temperature range described above, consult your sales or a service dealer.

Wear appropriate clothing and protective equipment

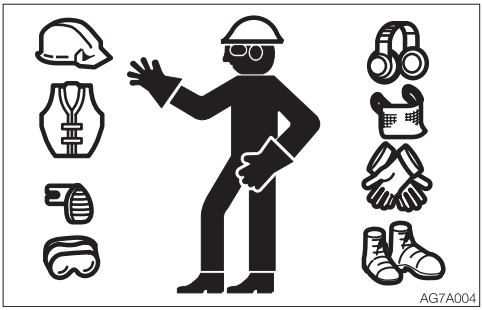

- Do not wear loose clothing or any accessory that can catch on controls or in moving parts.
- Do not wear oily or fuel stained clothing that can easily catch fire.
- Wear a hard hat, safety shoes, safety glasses, filter mask, heavy gloves, ear protection and other protective equipment as required by job conditions. Wear required appropriate equipment such as safety glasses and filter mask when using grinders, hammers or compressed air, as metal fragments or other objects can fly and cause serious injury.
- Use hearing protection when operating the machine. Loud prolonged noise can cause hearing impairments, even the total loss of hearing.

Install a fire extinguisher and first aid kit

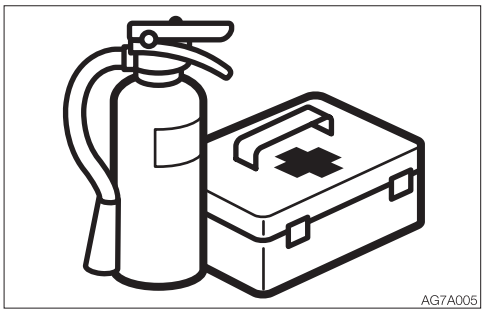

Be prepared for fire and accidents

- Install an extinguisher and a first aid kit, and learn how to use them.
- Lean how to fight a fire and how to deal with accidents.
- Know how to contact emergency assistance and make a list of emergency contacts.

Never remove safety equipment

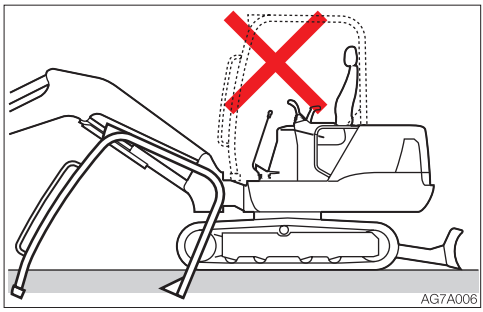

- Make sure all protective guards, covers and doors are in place and secured. Repair or replace damaged parts before operating the machine.
- Know how to use the safety lock lever, seat belt and other safety equipment and use them properly.
- Never remove any safety equipment except for servicing. Keep all safety equipment in good operating condition.

Use a signal person and a flag person

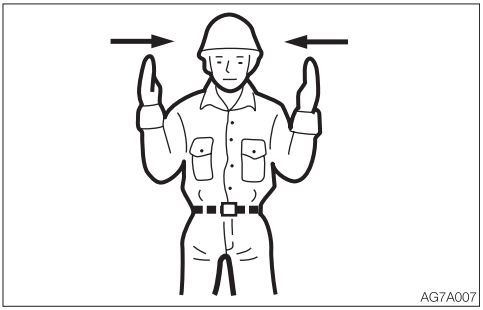

Learn how to use the hand signals required for particular jobs and make sure who has the responsibility for signaling.

- All personnel must fully understand all the signals.
- The operator must respond to signals only from the appointed signal person, but must obey a stop signal at any time from anyone.
- The signal person must stand in a clearly visible location when giving signals.

Cautions when standing up from or leaving the operator's seat

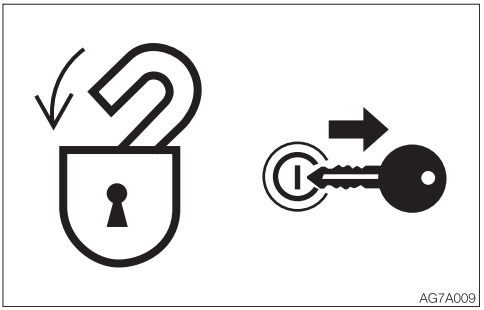

- Before standing up from the operator's seat to open/close the window or remove/install the lower window, lower the working equipment to the ground, raise the safety lock lever to engage the lock and stop the engine. If any controls should be accidentally touched when the safety lock lever is lowered (unlocked), the machine will suddenly move and cause serious injury or death.
- Be careful not to touch the operating levers when raising or lowering the safety lock lever.
- Before leaving the operator's seat, lower the working equipment to the ground, raise the safety lock lever to engage the lock and stop the engine. Also, be sure to remove the key, lock the door and covers, take it with you and store it in a specified place.

Avoid fire and explosion hazards



Keep flames away from fuel, oil, grease and antifreeze. Fuel is particularly flammable and dangerous.

- When handling these combustible materials, keep lit cigarettes, matches, lighters and other flames or sources of flames away.
- Do not smoke or permit open flames while handling fuel or working on the fuel system.
- Do not leave the location while refilling with fuel or oil.
- Never remove the fuel cap or add fuel when the engine is running or still hot. Also, do not spill the fuel on the hot surface of the machine or the component of the electric system.
- Clean up spilled fuel or oil immediately.
- Check for fuel, oil leak. Stop all leaks and clean the machine before operating.
- When operating with grinder or welding, move inflammables to a safe place.
- Do not cut or weld on pipes or tubes that contain flammable fluids. Clean thoroughly with nonflammable solvent before cutting or welding.
- Remove all trash or debris from the machine. Make sure that oily rags or other flammable material are not stored on the machine.
- Handle all solvents and dry chemicals (foam type fire extinguisher) according to procedures identified on manufacturer's containers. Work in a well-ventilated area.
- Never use fuel for cleaning purposes. Always use a nonflammable solvent.
- When handling the fuel, washing oil or paint, open the door and windows to ventilate thoroughly.
- Store all flammable fluids and materials in a safe and well-ventilated place.
- The short circuit of the electric system may cause the fire. Check for any loosened connections or damage to the wires every day. Retighten the loosened connector and wire clamp. Fix or change the damaged wire.
- Fire from the pipes:
  Make sure that the clamps, guards and cushions of the hoses and tubes are securely fixed. If not, hoses or tubes may be damaged due to vibration or contact with other parts during operation. This can cause the high-pressure oil to spurt out, resulting in the fire or injury.
- Do not perform the standstill regeneration if the machine is surrounded by flammable items such as plants, trees, dry grass, wastepaper, oil and waste tires. There is a risk of fire due to the high-temperature exhaust gas emitted from the muffler.

Exhaust fumes from the engine are poisonous

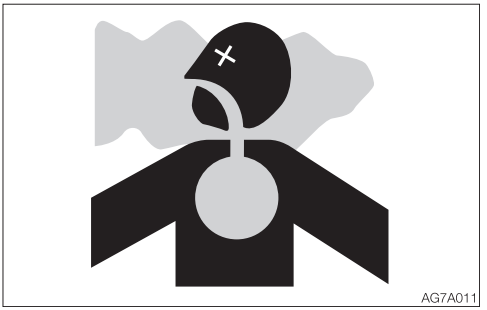

- Do not operate the engine in an enclosed area without adequate ventilation.
- If natural ventilation is not possible, install ventilators, fans, exhaust extension pipes or other venting devices.
- Do not perform the DPF regeneration in poorly-ventilated indoor spaces, as smoke could be generated during the DPF regeneration or carbon monoxide poisoning could result.
- Ammonia not held by the SCR catalyst could be discharged into the exhaust gas. Be careful of the potential ammonia odor when the system is excessively operated.

Handling asbestos dust

Inhaling asbestos dust can cause lung cancer. When handling the materials which may contain asbestos, take the following precautions:

- Never use compressed air for cleaning.
- Avoid brushing or grinding parts containing asbestos.
- For clean up, use a vacuum equipped with a high efficiency particulate air filter (HEPA).
- Wear the stipulated respirator if there is no other way to control the dust. When working indoors, install a ventilation system with a macromolecular filter.
- Do not allow unauthorized personnel in the work area while working.
- Follow the rules and environmental standard applicable to the work area.

Be careful not to get crushed or cut



Never put your hands, feet or other parts of your body between the upperstructure and the undercarriage or tracks, between the machine body and working equipment, or between a cylinder and moving part. The sizes of these gaps change when the machine moves, and a person can suffer severe injury or death.

Using optional products

- Consult with Takeuchi before installing optional attachments. Depending on the type of attachments or the combination of them, the attachment may come into contact with the operator's compartment or the other parts of the machine. Make sure that the optional attachment installed is not contacted with other parts before use.
- Do not use attachments that have not been approved by Takeuchi. Doing so may compromise safety or adversely affect the machine's operation or service life.
- Takeuchi will not be held responsible for any injuries, accidents or damage to its products caused by the use by a non-approved attachment.

Never modify the machine

Unauthorized modifications to this machine can cause injury or death. Never make unauthorized modifications to any part of this machine.
If you modify or alter the configuration of the machine in a way which results in a restriction of the operator's field of vision, a new risk assessment will need to be performed. If this becomes necessary, contact your Takeuchi service or sales dealer.

PRECAUTIONS WHEN PREPARING

Know the work area

Before starting operation, know the working area condition to ensure safe operation.

- Inspect the topography and ground condition of the working area, or the structure of the building when working indoors, and take the safety precautions as necessary.
- Be sure to avoid all hazards and obstructions such as ditches, underground lines, trees, cliffs, overhead electrical wires, or places where there is a danger of falling rocks or slides.

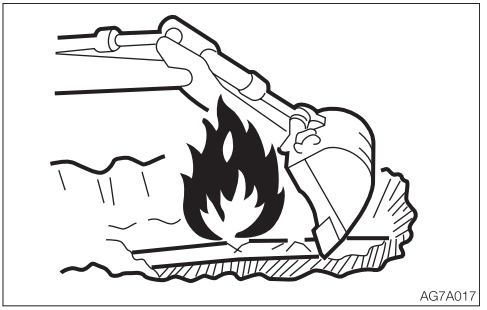

- Check with the administrator for the locations of buried gas pipes, water pipes and power cables. If necessary, determine what specific precautions must be taken to insure safety by consulting with the administrator.
- When working on roads, be sure to consider the safety of pedestrians and vehicles.
  - Use a flag person and/or a signal.
  - Fence off the working area and keep off unauthorized persons.
- When working in water or crossing shallow streams or creeks, check the depth of the water, the solidity of the ground and the water flow speed beforehand.
  Refer to “Cautions on operating” for further instructions.



- Do not perform the standstill regeneration if the machine is surrounded by flammable items such as plants, trees, dry grass, wastepaper, oil and waste tires. There is a risk of fire due to the high-temperature exhaust gas emitted from the muffler.
- The machine may automatically perform the regeneration while the engine is left running. Make sure that there are no flammable items around the machine and the exhaust line, and also that the engine hood is closed to prevent fire. Be careful not to burn yourself on the high-temperature exhaust gas.
- Do not perform the DPF regeneration in poorly-ventilated indoor spaces, as smoke could be generated during the DPF regeneration or carbon monoxide poisoning could result.

Check the strength of the bridge

When traveling over a bridge or a structure, check the permissible load. If the strength is insufficient, reinforce the bridge or the structure.

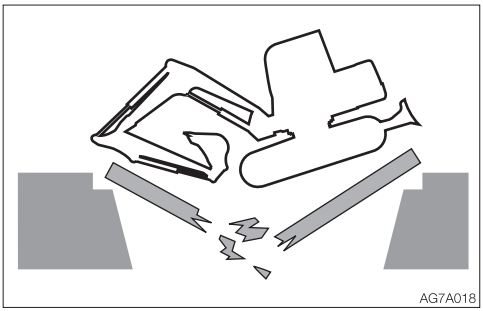
AG7A018

Always keep the machine clean

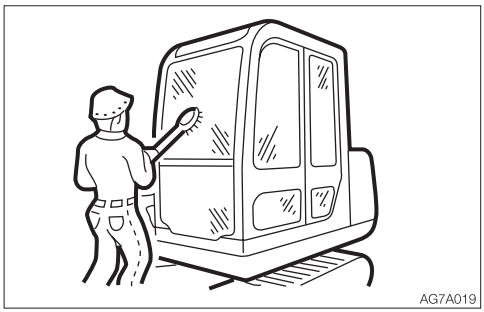
AG7A019

- Wipe off any oil, grease, mud, snow or ice, to prevent accidents due to slipping.
- Remove all loose objects and unnecessary devices from the machine.
- Remove any dirt, oil or grease from the engine area to prevent fires.
- Clean around the operator's seat and remove any unnecessary object from the machine.

Perform inspection and maintenance every day

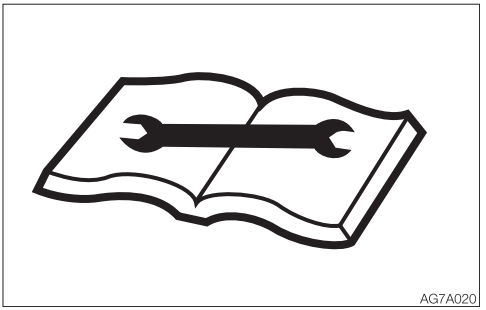

Failure to identify or repair the irregularities or damage on machine can lead to accidents.

- Before operating, perform the specified inspection and make prompt repairs where necessary.
- If a failure occurs and the operation becomes impossible or the engine fails, immediately stop the machine by following the shutdown procedure, and keep machine securely parked until the malfunction is corrected.

Cautions in the operator's compartment

- Remove mud and grease from shoe soles before entering the operator's compartment. Pedaling the machine with the shoes with mud and grease will cause a slip accident.
- Do not leave the parts or tools around the operator's seat.
- Do not leave any plastic bottles in the operator's compartment or attach any suction cups on the window glass. The plastic bottle or suction cup act as a lens and can cause fire.
- Do not use the mobile phone during traveling or working.
- Do not bring combustibles or explosives into the operator's compartment.
- After smoking, be sure to tightly close the lid of the ashtray to put out the match or cigarette.
- Do not leave the cigarette lighter in the operator's compartment. When the room temperature rises, the lighter may explore.

Emergency exit

Rear window
If you should become trapped inside the cab, remove the rear window to get out.

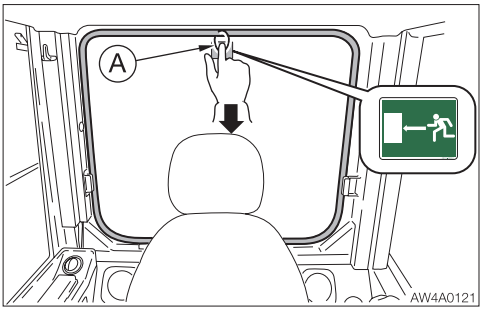

1. Pull off the ring (A) and remove the tip of the rubber wedge.
2. Grasp and pull the tip of the rubber wedge to remove the entire rubber wedge.
3. Kick out the rear window. Note that the glass may break. Be careful not to get injured.

PRECAUTIONS WHEN STARTING

Support your weight in a three point secure stance when getting on/off the machine

- Do not jump on or down from the machine. Never attempt to get on or off the moving machine.
- When getting on or off the cab, first fully open the door to the locked position and check that it does not move (for machines with cab).



- Climb up/down the steps facing the machine and holding the handrail to support your weight in a three point secure stance (hand and feet).
- Never use the safety lock lever or control levers as hand holds.

Before starting the machine, ask any unauthorized personnel to leave the area

Do not start the engine until you are sure it is safe to start the machine by checking the following items.

- Walk around the machine and warn the person who is servicing the machine or is walking near the machine. Do not start the machine until you are certain that no one is around the machine.



- Check if there is a “DO NOT OPERATE” alert sign or similar sign is on the cab door, controls or starter switch. If there is one, do not start the engine or touch any levers.
- Sound the horn to warn people around the machine.

Sit in the operator's seat and start the engine

- Adjust the seat to securely latch it.

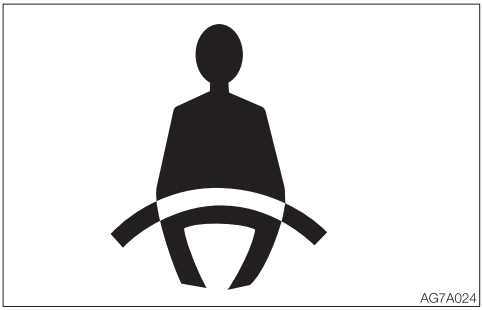
AG7A024

- Fasten the seat belt.
- Check if the parking brake is on and all control levers and pedals are in the neutral position.
- Check if the safety lock lever is in the lock position.
- Make sure that no one is near the machine.
- Start and operate the machine only from the operator's seat.
- Never attempt to start the engine by shorting across the starter terminals.

Starting with jumper cables

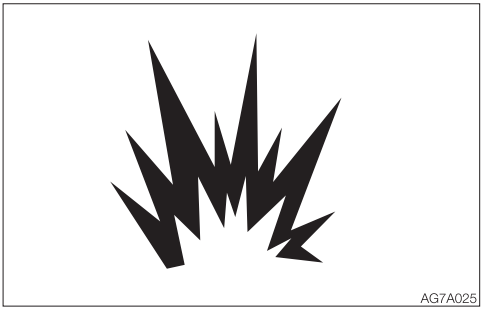
AG7A025

Use jumper cables only in the recommended manner. Improper use of jumper cables can result in battery explosion or unexpected machine motion.
Refer to "If the battery goes dead" for further instructions.

After starting the engine

After starting the engine, perform the operations and checks described below in a safe place with no persons or obstacles in the area. If any malfunction is found, follow the shutdown procedure and report the malfunction.

- Warm up the engine and hydraulic oil.
- Check if all gauges and warning devices are properly working.
- Check for any noises.
- Test the engine speed control.
- Operate each control to ensure they are properly working.

In cold climates

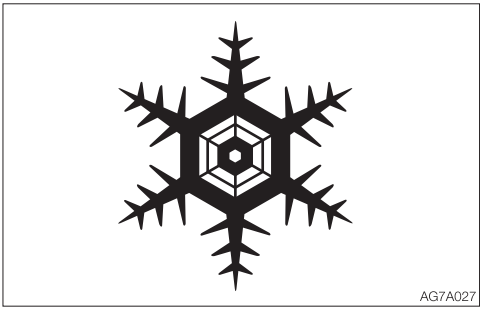

- Be careful of slippery conditions on freezing ground, steps and hand holds.
- In severe cold climates, do not touch any metal parts of the machine with bare hands. The skin will freeze to the metal, resulting in severe injury.
- Do not use ether or starting fluid on this engine. The starting fluids can cause explosion and serious injury or death.
- Warm up the engine and hydraulic oil. If the levers are operated without warming, the machine will not react or move promptly or properly, resulting in accident.

PRECAUTIONS WHEN OPERATING

Ensure good visibility

Check the field of view before operating the machine.

- When working in dark places, turn on the machine's working lights and headlights and additional lighting equipment installed, as necessary.
- When visibility is poor due to bad weather (fog, snow, rain or a cloud of dust), stop operating the machine and wait until visibility improves.
- Clean the windows, mirrors, lights and camera to ensure good visibility. Adjust the mirror and camera to the best positions so that the operator can see the rear view (blind spots) from the operator's seat.
- Unauthorized machine modifications or installation of unapproved attachments could impair the visibility. The operator's field of view must conform to ISO 5006.

Do not permit riders on the machine



Do not allow anyone to ride on any part of the machine at any time while traveling or operating.

Check if the work area is safe and secure before operation

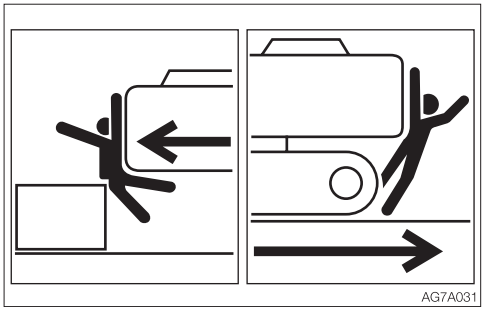

- Confirm the performance limits of the machine.
- Use a signal person at road shoulders, narrow places or where your vision is obstructed.
- Never allow anyone to enter the machine's slewing radius and path.
- Signal your intention to move by sounding the horn.
- There is a blind spot in the rear of the machine. Before traveling in reverse, check that the area is safe and clear.

Safety precautions when performing the standstill regeneration

The machine may automatically perform the regeneration while the engine is left running. Make sure that there are no flammable items around the machine and the exhaust line, and also that the engine hood is closed to prevent fire. Be careful not to burn yourself on the high-temperature exhaust gas.

Check the position of the undercarriage (tracks) before traveling

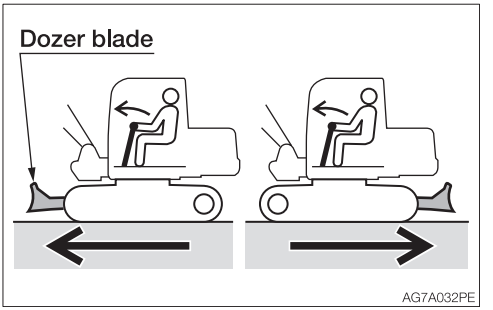

Before operating the travel levers/pedals, make sure that the dozer blade is to the front of the operator's seat. Remember that when the dozer blade is to the rear of the operator's seat, the travel levers/pedals must be operated in the reverse direction from when it is to the front.

Travel safely

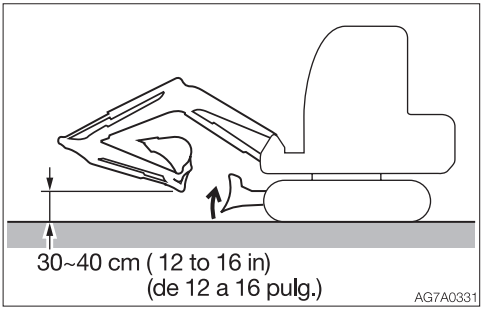

- Travel with the dozer blade raised, the hoe attachment folded as shown on the figure above, and the bucket raised 30 to 40 cm (12 to 16 in.) above the ground.
- Do not slew while traveling. If you must operate the hoe attachment while traveling, operate at speeds slow enough so you have complete control at all times.
- When a load greater than a set value is applied during traveling in 2nd (high) speed, the speed will automatically slow down to 1st (low) speed. When the load becomes lighter, the speed will increase and return to 2nd (high) speed. It should be noted that the travel speed changes depending on the load condition (for machines with the automatic travel shift-down system).
- When traveling on the uneven road or sharp slope, turn off the auto-deceleration switch. If the machine is operated on such roads with the switch turned on, the engine speed may increase, causing the machine speed to suddenly increase (machines with the auto-deceleration switch).

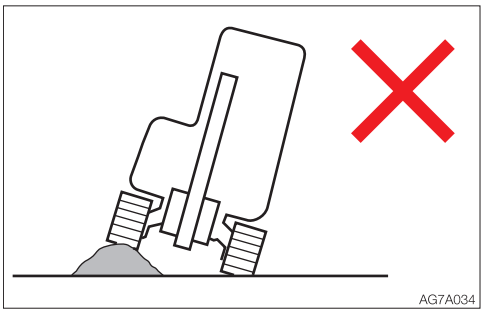

- Avoid crossing over obstacles whenever possible. If you must do so, keep the hoe attachment close to the ground level and travel slowly. Never cross obstacles which will tilt the machine to an angle of 10° or greater.
- On uneven ground, maintain the low speed and avoid starting, stopping or changing directions abruptly. Otherwise, the working equipment may come in contact with the ground, causing the machine to lose its balance and get damaged or to damage the structures in the surrounding area.

Cautions on traveling on slopes

When traveling on slopes or grades, be careful that the machine does not tip (roll) over or slide.

- Never travel on slopes that are too steep for the machine to maintain its stability (maximum gradeability: 35°, lateral tipping angle: 15°). Note that in reality, the machine's stability becomes lower than the above values depending on the working condition.

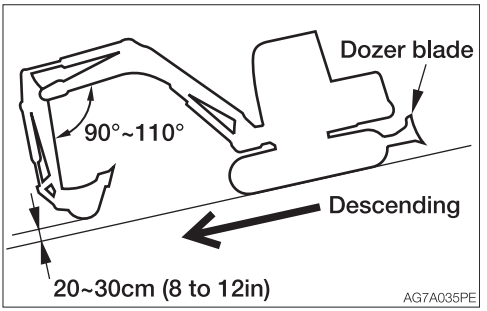

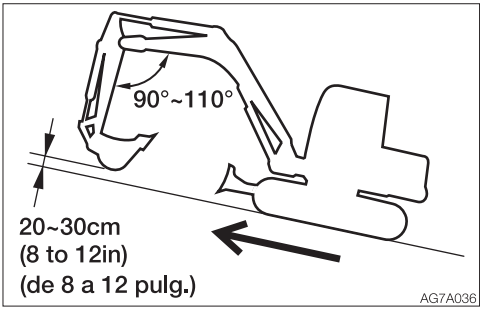

- When climbing a hill, keep the operator's seat facing the hillside. When descending a hill, keep the operator's seat facing the downhill direction. In either case, travel must be done while paying attention to the ground in front of the machine.
- When traveling on slopes, lower the bucket to a height of 20 to 30 cm (8 to 12 in.) above the ground. When climbing a steep slope, extend the hoe attachment to the front. In emergencies, lower the bucket to the ground and stop the machine.
- When traveling on slopes or grades, drive slowly in 1st (low) speed. When descending a slope, slow down the engine speed.
- Do not descend slopes in reverse.

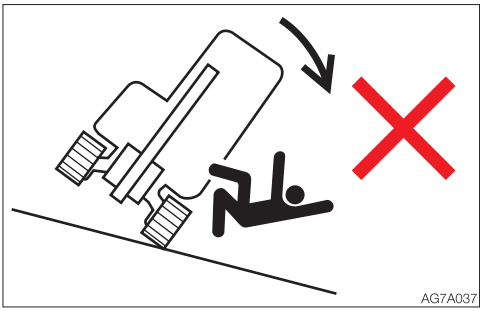

- Do not change directions on slopes or traverse slopes. First return to a flat surface, and then take an alternative path.
- The machine may slip sideways even on a slight slope if the ground is covered with grass or dead leaves, or when traveling on a wet metal plate or frozen surfaces. Make sure the machine is never positioned sideways on slopes.
- If the machine is stalled on the slope, return each operating lever to the neutral position before restarting the engine.

Operate the machine on snow or ice with extra care

- When traveling on snow or on frozen surfaces, drive at a low speed and avoid starting, stopping or changing directions abruptly.
- In the snowy area, the road shoulder and objects placed beside the road are buried in the snow and cannot be seen. There is a hazard of the machine tipping over or hitting covered objects, so always carry out operations carefully.
- If the machine enters deep snow, there is a hazard that it may tip over or become buried in the snow.
  Be careful not to drive beyond the road shoulder or to get trapped in a snow drift.
- With frozen ground surfaces, the ground becomes soft when the temperature rises, and this may cause the machine to tip over, resulting in an operator trapped inside the machine.
- When parking the machine on an unstable ground, lower the dozer blade.

Do not move the bucket over the heads of people

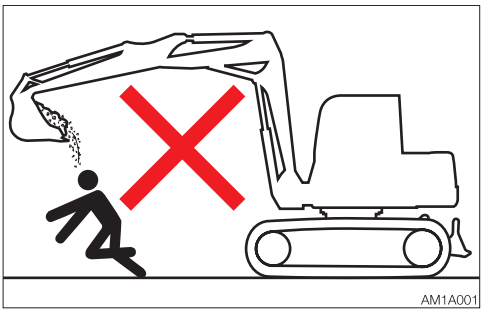

Moving the bucket over the heads of people entails the danger of the load spilling or the sudden dropping of the bucket.

Ensure driver's safety when loading

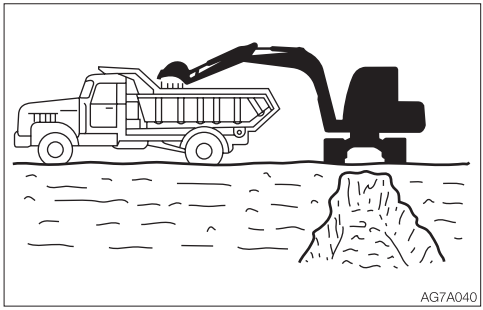

Do not load a truck unless the truck driver is in a safe place.

- Never swing or position the bucket over a person or the cab room.
- Load the truck from the rear.

Keep a safe distance from the overhead high-voltage cables

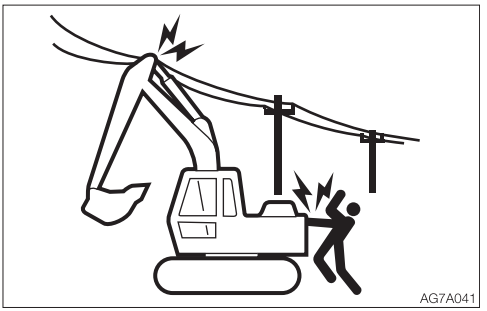

Never bring any part of the machine or loaded material to near to the high voltage cables unless all safety precautions required by the local and national authorities have been installed. If a person comes near to the machine that is discharging sparks or located near to or in contact with the power source, there is a hazard of electric shock and death.

- Always maintain a safe distance between the machine and the high-voltage electric cable.
- Check with the local power company about safe operating procedure before starting operations.
- Consider all cables to be high-voltage cables and treat all cables as energized even though it is known or believed that the power is shut off and the cables are visibly grounded.
- Use a signal person to give warning if the machine approaches too close to the high-voltage electric cables.
- Caution all personnel in the work area not to come close to the machine or the loaded material.

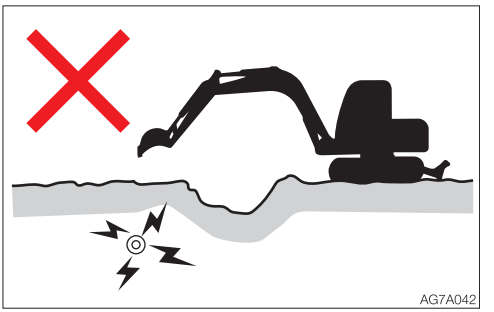

- Pay also careful attention to the high-voltage electric cables buried underground.

Watch out for hazardous working conditions

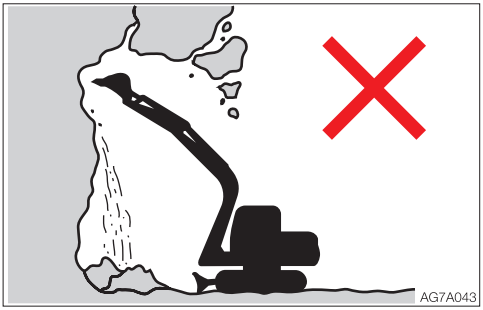

- Never undercut a high bank. Doing so is dangerous as it may cause ground collapse.
- Do not operate in places where there is a danger of falling rocks.

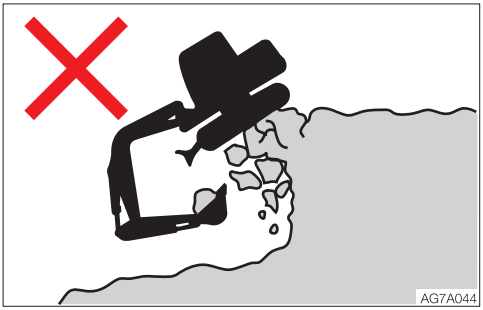

- Maintain a safe distance between the machine and the edge of the digging site. Do not dig the ground under the front of the machine.
- When working close to the cliffs or road shoulders, to make it easier to escape if there is any problem, set the crawlers at right angles to the cliff or road shoulder and the dozer blade to the front when carrying out operations.

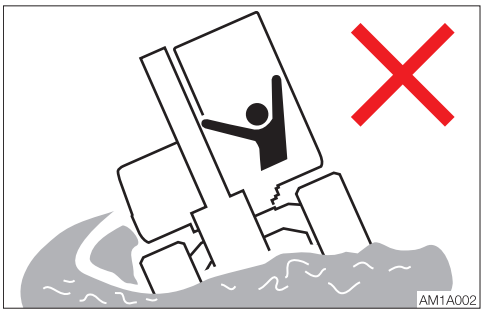

- Do not enter areas where there is soft ground. Doing so could cause the machine to tilt under its own weight, resulting in a machine tipping over or sinking into the ground.

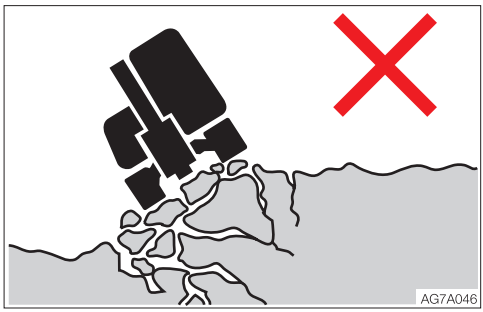

- Do not come close to unstable grounds (cliffs, road shoulders, deep ditches). If the ground should collapse under the weight or vibration of the machine, there is a hazard that the machine may fall or tip over.
  - Remember that the soil after heavy rain or blasting is weak.
  - The ground of top of the embankment and of the circumferences of the excavated ditches are also weak.

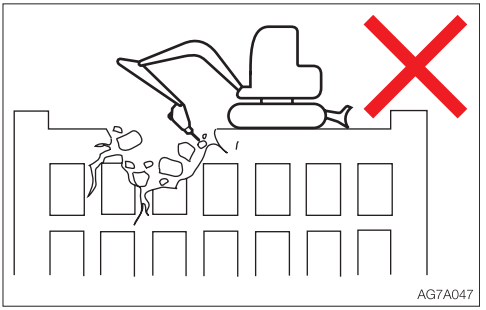

- Do not perform demolition work under the machine. There is a hazard that the machine may fall down, because the ground becomes unstable.
- When working on or from the top of buildings or other structures, check the strength and the structure before starting operations. If a building or structure collapses, serious injury or damage will result.

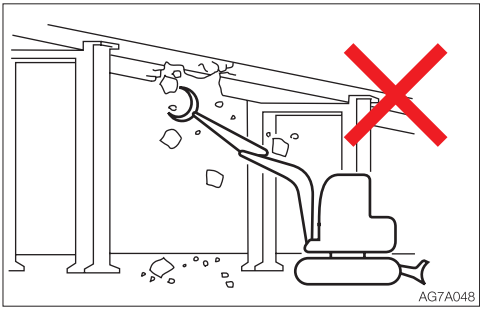

- When doing demolition work, do not perform demolition above your head. There is a hazard of broken parts falling or of the building collapsing and causing serious injury or damage.

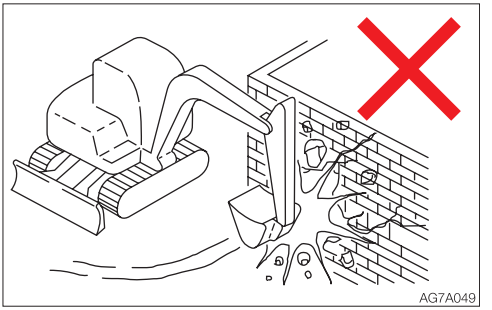

- Do not use the impact force of the hoe attachment for breaking work. There is a hazard of serious injury being caused by flying pieces of broken materials and by the damaged hoe attachment.

Be careful with flying objects

This machine is not equipped with protective equipment to protect the operator from flying objects. Do not use this machine in places where there are risks of the operator being hit by flying objects.

Operating on slopes is dangerous

When operating on slopes or grades, slewing or operation of working equipment may cause the machine to lose stability and tip over. Avoid operating on slopes whenever possible.

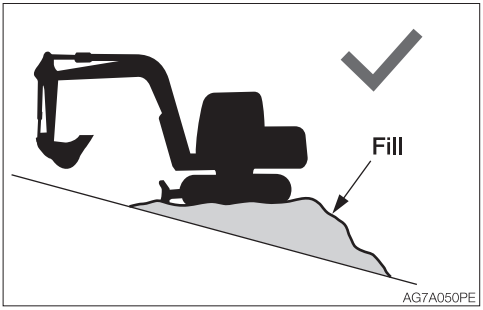

- Level off the work area.

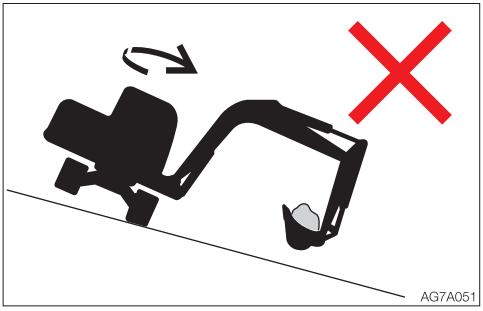

- Avoid slewing to the downhill direction with the bucket full of loaded material. This will reduce the stability of the machine and may result in tipping over.

Never slew (swing) sideways with a heavy load

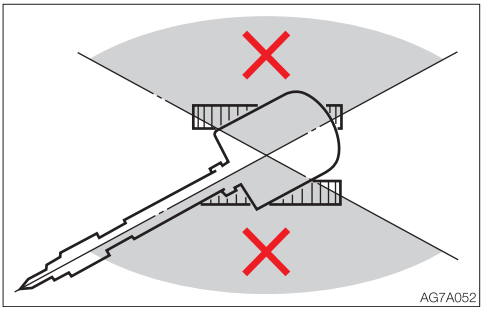

The machine can tip over more easily in the lateral direction than in the longitudinal direction.

- Do not slew (swing) sideways with a heavy load at the tip of the hoe attachment. In particular, do not slew (swing) sideways on slopes.
- The tip of the attachment is heavier for machines equipped with breakers, crushers or long arms than for machines equipped with the standard bucket. For such machines with heavier tips, do not perform excavation with the digging arm (boom) facing the downhill direction or operate toward sideways.

Be careful with the overhead objects

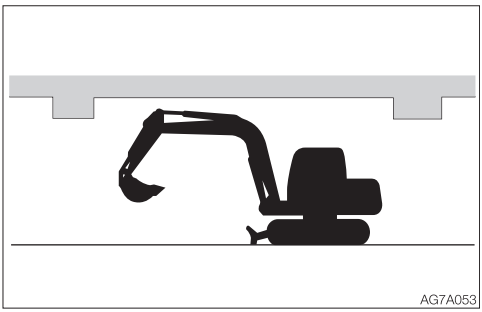

When operating under bridges, in tunnels, near electric cables or indoors, be careful not to let the boom or arm hit overhead objects.

Cautions when lifting loads

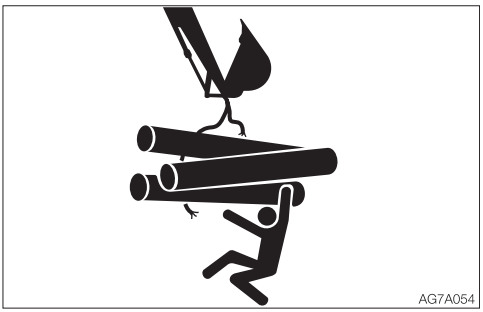

If the machine is used for lifting, it must be equipped with an emergency shut-off valve on the arm and the boom, respectively. Extreme caution should be paid if the excavator is used for lifting.

- Never lift loads in excess of capacity. Overload will cause the machine to roll and can result in serious injury or death.
- All rated lift capacities are determined by using a machine placed on a stable and flat ground. For a safe lifting work, the user is expected to make due allowance for the particular job conditions. They include, soft or uneven ground, non-level condition, side loads, dynamic or jerked loads, hazardous conditions, and experience of personnel. The operator and other personnel should fully acquaint themselves with the operator's manual before operating this machine, and rules for safe operation of equipment shall be adhered to at all times.
- The bucket linkage or lifting device may fail if chains or lifting device are incorrectly attached, resulting in serious injury or death.
- Do not attempt to pull stumps out of the ground when using the machine as a crane. The loads imposed on the machine under this use are completely unknown.
- Do not allow anyone to stand on or under the lifted loads or come close to the work area.

Cautions when towing

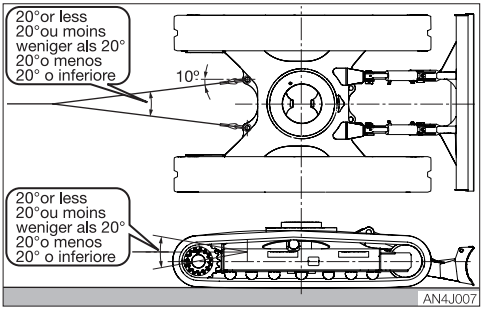

When towing, serious injury or death could result, if performed incorrectly or the wire rope being used is inappropriate or not properly inspected.

- It becomes dangerous if the wire rope breaks or becomes disengaged. Use a wire rope appropriate for the required tractive force.
- Do not use a wire rope that is kinked, twisted or otherwise damaged.
- Do not apply heavy loads abruptly to the wire rope.
- Wear safety gloves when handling the wire rope.
- Make sure there is an operator on the machine being towed as well as on the machine that is towing.
- Never tow on slopes.
- Do not let anyone come near to the wire rope while towing.

Refer to “Towing” for further instructions.

PRECAUTIONS WHEN STOPPING

Park safely

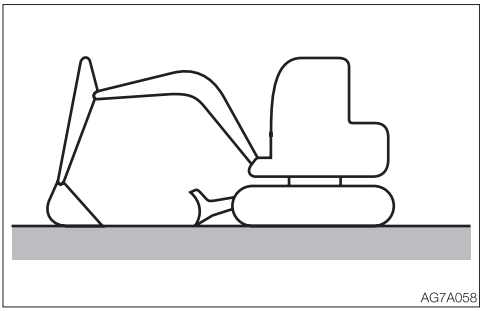

- Park the machine on a flat, rigid and safe ground. Set the parking brake.

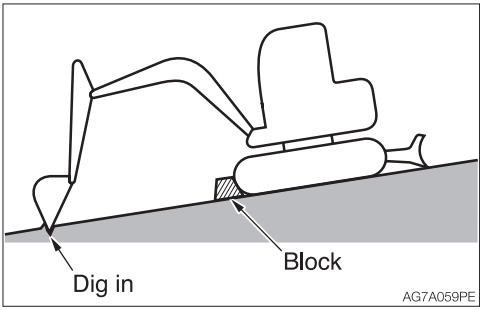

If you must park on a slope or incline, park the machine securely and block the movement of the machine.

- When parking on a street, use barriers, caution signs, lights, etc., so that the machine can easily be seen even at night to avoid collision with other vehicles.

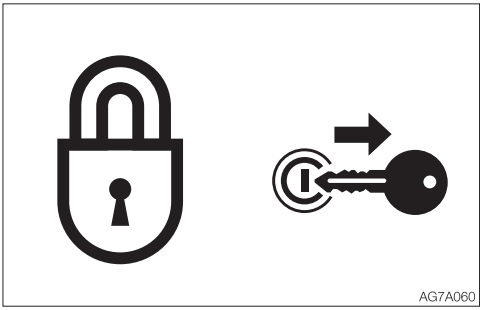

- Before leaving the machine, do the followings:
  1. Lower the bucket and the dozer blade to the ground.
  2. Raise the safety lock lever to the locked position.
  3. Stop the engine and remove the starter key.
  4. Lock the cab and covers and take the key with you.

PRECAUTIONS WHEN TRANSPORTING

Load/unload the machine safely

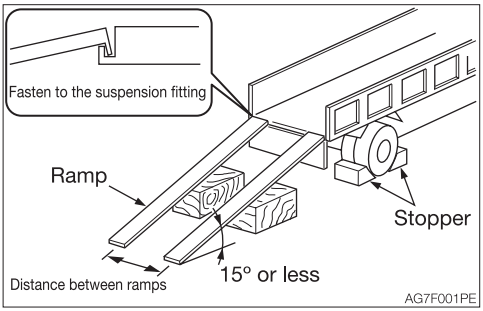

The machine may roll or tip over or fall while being loaded or unloaded. Take the following precautions:

- Select a firm, level surface and keep sufficient distance from road shoulders.
- Secure the ramps of adequate strength and size to the truck bed. The slope of the ramps must not exceed 15°. If the rumps are bowed down too low, support them with poles or blocks.
- Never use the working equipment to load or unload the machine. Doing so may result in tipping over or falling down of the machine.
- Keep the truck bed and loading ramps clean of oil, soil, ice, snow, and other materials to prevent the machine from sliding sideways. Clean the crawlers.
- Chock the transporter wheels to prevent movement.
- Turn off the deceleration switch and auto-deceleration switch. Otherwise, the engine speed may suddenly increase to cause troubles.
- When being loaded or unloaded, travel slowly in 1st (low) gear by following the signal from the signal person.
- Never change courses on the ramps.
- Do not slew/swing on the ramps. The machine may tip over.
- When slewing/swinging on the truck bed, do it slowly as the footing should be unstable.
- Lock the cab door after being loaded, if applicable. Otherwise, the door may open during transport.
- Chock the tracks and secure the machine to the truck bed with wire rope or chain.

Hoist the machine safely

- Know and use correct crane signals.
- Check the hoisting equipment for damaged or missing parts on a daily basis and replace as necessary.
- When hoisting, use a wire rope capable of lifting the machine mass.
- Hoist the machine in such a manner described in the procedure below. Do not do it in any other manner, as it may result in the machine losing its balance.
  Refer to “Hoisting the machine” for further instructions.
- Do not hoist the machine with an operator on it.
- When hoisting, hoist slowly so that the machine does not tip.
- Keep everyone out of the area when hoisting. Do not move the machine over the heads of the persons.

Transport the machine safely

- Know and follow the applicable safety rules, vehicle code and traffic laws when transporting the machine.
- Select the best transport route by considering the length, width, height and weight of the truck with the machine loaded on it.
- Never abruptly start or stop or run at a high speed at the sharp curves during transport. Doing so will move or lose the balance of the loaded machine.

PRECAUTIONS ON MAINTENANCE

Display a “DO NOT OPERATE” alert sign

Severe injury could result if an unauthorized person should start the engine or touch controls during inspection or maintenance.

- Before performing maintenance, stop the engine, remove the key and take it with you.



- Display a “DO NOT OPERATE” alert sign on easy-to-see locations such as on the starter switch or on control levers.

Use the correct tools

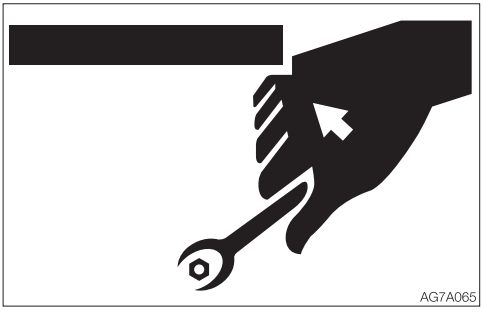

Do not use damaged or weakened tools or tools designed for other purposes. Use tools appropriate for the work involved.

Replace safety-critical parts periodically

- Replace fuel hoses periodically. Fuel hoses wear out over time, even if they do not show any symptom of wear.
- Regardless of the replacement schedule, replace immediately if a symptom of wear is found.
  Refer to “List of safety-critical parts” for further details.

Explosionproof lighting



To prevent an ignition or explosion, use explosion-proof lights when inspecting fuel, oil, coolant or battery fluid. Otherwise, explosion could result causing serious injury or death.

Prohibit access by unauthorized persons

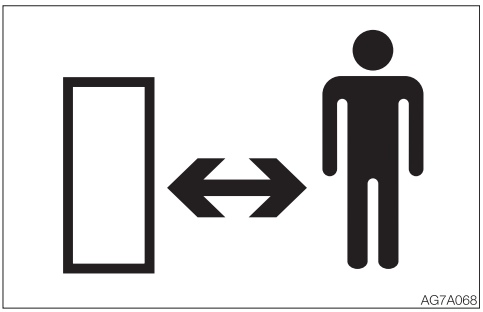

Do not allow unauthorized personnel in the work area while working. Be careful when grinding, welding or using a hammer. You could be injured by flying debris from the machine.

Prepare work area

- Select a firm, level work area. Make sure there is adequate light and, if indoors, ventilation.
- Clear obstacles and dangerous objects. Eliminate slippery areas.

Always keep the machine clean

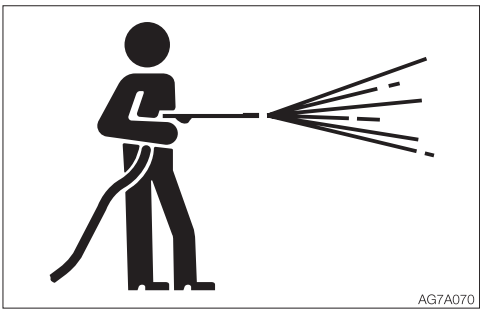

- Clean the machine before performing maintenance.
- Stop the engine before washing the machine. Cover the electrical parts so that water cannot enter. Water on electrical parts could cause short-circuits or malfunctions. Do not use water or steam to wash the battery, electronic control components, sensors, connectors or the operator's compartment.

Stop the engine before performing maintenance

- Avoid lubrication or mechanical adjustments while the machine is moving or while the engine is running when the machine is not moving.
- If maintenance must be performed with the engine running, always work as a two person team communicating each other.
  - One person must sit in the operator's seat so that he/she can immediately stop the engine when necessary. He/she must take care not to touch the lever or pedal unless necessary.
  - The one who performs maintenance must make sure to keep his/her body or clothing away from the moving part of the machine.

Stay clear of the moving parts

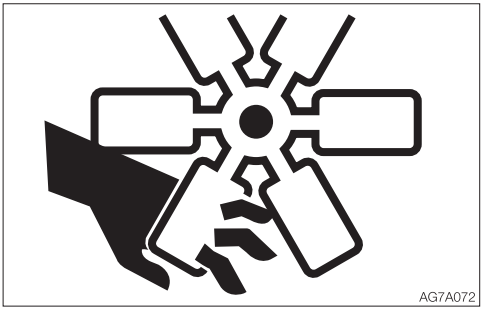

- Stay clear of all rotating and moving parts. If a hand or tool becomes trapped in the rotating or moving part, serious injury or death could result.
- If a tool or other objects is dropped or inserted in the fan or fan belt, it will be flown or cut in pieces. Do not drop or insert anything in the fan or fan belt.

Firmly secure the machine or any component that may fall



- Before performing maintenance or repairs under the machine, lower all moveable working equipment to the ground or in the lowermost position.
- Chock the tracks.
- If you must work beneath the raised machine or equipment, always use wood blocks, jack-stands or other rigid and stable supports. Never get under the machine or working equipment if they are not sufficiently supported. This procedure is especially important when working on hydraulic cylinders.

Secure the working equipment

To prevent unexpected movement, firmly secure the working equipment when repairing or replacing the bucket teeth or side cutter.

Secure the engine hood or cover when opened

Be sure to secure the engine hood or cover before working the inside. Do not keep the hood or cover open on a windy day or if the machine is parked on a slope.

Cautions on working on top of the machine



- Before performing maintenance on the top of the machine, clean the place you will work on and observe the following to prevent falling.
  - Do not spill oil or grease.
  - Do not leave tools scattered around.
  - Watch your step when walking.
- Never jump down from the machine. Use the steps and handrails when climbing up and down the machine, and always support your body at three points with your hands and feet.
- Do not stand on the dozer blade and perform maintenance work. Doing so is dangerous because of the unsteady foothold. Use the work bench.

Place heavy objects in a stable position



When it is necessary to temporally place a heavy object or an attachment on the ground during removal or installation, be sure to place it in a stable position. Keep unauthorized persons from the storage place for such object.

Cautions when refueling



- Do not smoke or permit open flames while fueling or near fueling operations.
- Never remove the fuel cap or add fuel when the engine is running or still hot. Do not spill fuel on the hot surface of the machine.
- Fill the fuel tank in a well ventilated place.
- Do not fill the fuel tank to capacity. Allow room for oil expansion.
- Clean up spilled fuel immediately.
- Securely tighten the fuel filler cap. If the fuel cap is lost, replace it only with the genuine cap. Use of a non-approved cap without proper venting may result in pressurization of the tank.
- Never use fuel for cleaning.
- Use the correct grade of fuel for the operating season.

Handling of hoses

Oil leak or fuel leak can cause a fire.

- Do not twist, bend or hit the hoses.
- Never use twisted, bent or cracked pipes, tubes or hoses; otherwise, they may burst.
- Retighten loose connection.

Be careful with hot and pressurized components

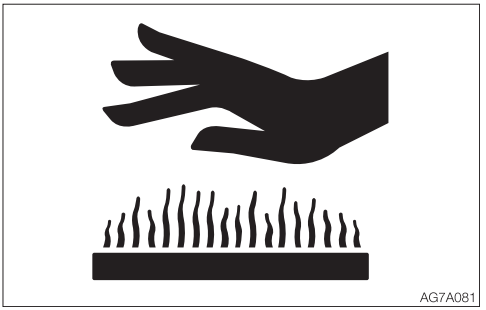

Stop the engine and allow the machine to cool down before performing maintenance.

- The engine, muffler, radiator, hydraulic lines, sliding parts and many other parts of the machine are hot immediately after the engine is stopped. Touching these parts will cause burns.
- The engine coolant, hydraulic oil and other oils are also hot and under high pressure. Be careful not to touch the hydraulic oil when loosening the cap or plug. Working on the machine under these conditions could result in burns or injuries due to the hot oil spurting out.
- The machine and the exhaust gas emitted from the exhaust line can be very hot while the engine is running or the regeneration is under way, as well as immediately after the engine is stopped. Be careful not to accidentally touch them; doing so could cause burns.

Be careful with hot cooling systems

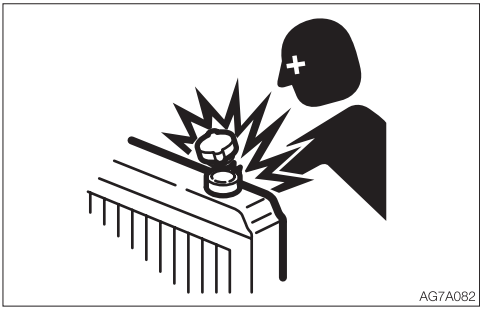

Do not remove the radiator cap or the drain plug when the cooling water is hot. Stop the engine and wait until the engine and the cooling water cool. Then, slowly loosen the radiator cap to release the internal pressure and remove it.

Be careful with oil internal pressure

Pressure is maintained in the hydraulic circuit long after the engine has been shut down.
- Completely relieve the internal pressure before performing maintenance work.

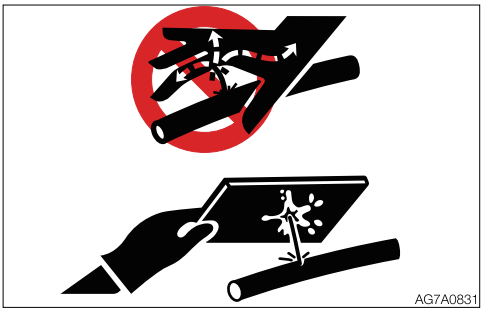

- The hydraulic oil is high enough pressure to penetrate the skin or eyes and cause serious injury, blindness or death. Remember that the hydraulic oil escaping from a small hole is almost invisible. When checking for leaks, wear protective goggle and thick gloves, and use a paperboard or plywood to keep your skin from oil spurting.
  If oil penetrates the skin, it must be surgically removed within a few hours by a doctor familiar with this type of injury.

Release pressure before working on the hydraulic system

Oil may spurt out if caps or filters are removed or pipes are disconnected before releasing the pressure in the hydraulic system.
- Immediately after the engine is stopped, and while the safety lock lever is still in the unlock position, turn the starter switch to ON and move all the control levers and pedals several times all the way in each direction to release the pressure from the working equipment circuitry.
- Press the air breather button to relieve the internal pressure from the tank.
- When removing plugs or screws, or when disconnecting hoses, stand to the side and loosen them slowly to gradually release the internal pressure before removing.
- Oil or plug may spurt out according to the pressure in the travel motor case. Loosen the plug slowly and release the internal pressure.

Be careful with debris when the hammer is being used

When using a hammer, pins may fly out or metal particles may be scattered. This may lead to serious injury.
- If hard metal parts such as pins, bucket teeth, side cutter or bearings are hit with a hammer, wear protective gear such as safety goggles and gloves.
- When hitting pins or bucket teeth, always check that there is no one in the surrounding area.

Be careful with the high-pressure grease


AG7A086

In the track adjuster, the grease has been injected under high pressure. If the tension is adjusted without following the prescribed procedure, the grease discharge valve may fly off, resulting in injury.

- Never loosen the grease fitting.
- Loosen the grease discharge valve slowly. Do not turn it more than 1.5 turns.
- Do not put your face, arms, legs or body in front of the grease discharge valve.
- If grease does not come out when the grease discharge valve is loosened, the valve is faulty. Ask a Takeuchi service agent for repair.

Never disassemble the track adjuster

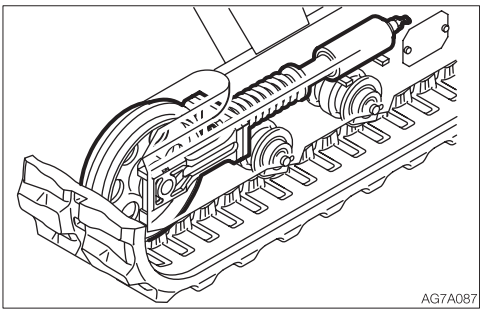
AG7A087

There is a very strong spring contained in the track adjuster. If the track adjuster is accidentally disassembled, the spring can pop out, resulting in serious injury Never disassemble the track adjuster.

Cautions when servicing the air conditioner

If the refrigerant comes in contact with eyes, it damages your eyesight. If the refrigerant comes in contact with skin, it may cause frostbite. Never touch the refrigerant.

Handling of the accumulator



Be sure to handle the high-pressure nitrogen gas enclosed in the accumulator with care. If handled incorrectly, it could explode and cause serious injury. Strictly observe the following precautions:

- Do not disassemble.
- Do not allow flame near or throw it into a fire.
- Do not drill, weld or fuse.
- Do not subject it to physical shock such as hitting, rolling or dropping.
- Before disposing of the unit, the sealed gas must be drained. Contact a Takeuchi service agent for help.

Disconnect the battery wiring



- Disconnect the battery wiring before working on the electrical system or doing electric welding. Disconnect the negative (–) battery cable first. When reconnecting, connect the negative (–) battery cable last.
- The SCR system operates for up to 2 minutes after the starter switch is turned to the OFF position.
  When removing the batteries or electrical connectors for inspection or maintenance, wait for at least 2 minutes after the starter switch is turned to the OFF position. Otherwise, the system could fail.

Precautions for handling DEF/AdBlue®

DEF/AdBlue® is a colorless, transparent, odorless and non-hazardous aqueous solution (32.5% urea, 67.5% water, freezes at –11°C), and is harmless to the human body. In very rare cases, however, inflammation could occur in some people, and proper actions should be taken as follows.

- If skin contact occurs, flush with water. If there are changes in the skin condition or if there is pain, immediately seek medical attention.
- If accidentally swallowed, drink one or two glasses of water or milk and immediately seek medical attention.
- If eye contact occurs, immediately flush with a large amount of clean water and seek medical attention.
- Although DEF/AdBlue® itself is a noninflammable liquid, a pungent odor may be produced if heated in a fire. In case of fire, immediately evacuate the area and go to a safe place.
- Do not use expired DEF/AdBlue® solution (including solution left in the tank) stored for a long period. Doing so could cause ammonia slip, degraded NOx conversion efficiency or device damage.
- When handling DEF/AdBlue®, do not use anything such as cotton work-gloves whose fibers could get into the solution. Doing so could cause clogging of the DEF/AdBlue® filter or urea deposit at the DM injection port.

Use caution when handling batteries

- Batteries contain sulfuric acid which will damage the eyes or skin in case of contact.
  - If eye contact occurs, flush immediately with clean water and get prompt medical attention.
  - If accidentally swallowed, drink large quantities of water or milk and call a physician immediately.
  - If acid contacts skin or clothing, wash off immediately with a lot of water.
- Wear protective goggle and gloves when working with batteries.
- Batteries generate flammable hydrogen gas which may explode. Keep away from flame, sparks, fire or lighted cigarettes.
- When checking the level of the battery fluid, use a flashlight.
- Be sure to stop the engine by turning off the starter switch before inspecting or handling the battery.
- Be careful not to let metal tools or any metal objects come into contact with the battery terminals and cause a short circuit.
- Loose battery terminals may result in sparks. Be sure to fasten terminals tightly.
- Make sure the battery caps are tightened securely.
- Do not charge a battery or jump-start the engine if the battery is frozen; otherwise it may explode. Warm the frozen battery to 15°C (60°F) before use.
- Do not use the battery when the fluid level is below the lower level limit. Doing so will hasten the deterioration of the internal portions of the battery and shorten the battery life. It also can cause rupturing (explosion).
- Do not add the distilled water above the upper level limit. Doing so could cause the fluid to leak. This fluid can cause skin damage if contacted, or can cause the machine components to corrode.
- Use a dampened cloth to clean around the fluid level line and check the fluid level. Do not clean with a dry cloth; otherwise it could cause static electricity to build up, resulting in ignition or explosion.

Periodically replace the safety-critical parts

- To use the machine safely for a longer period, periodically add oil and perform inspection and maintenance. To improving the safely, replace the safety-critical parts like hoses and seat belts periodically. Refer to “Safety-critical parts to be replaced periodically” for further details.
- The “Safety-critical parts to be replaced periodically” are the parts which deteriorate, wear and fatigue after repeated use and whose properties change over time. While these characters of these parts could cause serious physical or personal damage, judging the remaining life of these part are difficult from external inspection or the feeling when operating.
- Replace the “Safety-critical parts to be replaced periodically” if any defect is found from external inspection, even when they have not reached the time specified interval.

Jump starting with booster cables

- When starting the engine using the booster cables, be sure to connect the cables in the proper order described below. Wrongly connected cables can result in sparking and battery explosion.
  - Do not allow the “machine in trouble” and “rescue machine” to touch each other.
  - Do not allow the positive (+) and negative (–) clips of the booster cables to touch each other or to come in contact with the machine.
  - When connecting, attach the positive booster cable to the positive (+) terminals first. When disconnecting, remove the negative cable from the negative (–) terminal (ground) first.
  - Be sure to connect the clips securely.
  - Connect the last clip of the booster cable to a point as far away from the battery as possible.
- Always wear the protective goggle and gloves when starting the engine by using the booster cables.
- Use the booster cables and clips of a size suited to the capacity of battery. Do not use damaged or corroded booster cables and clips.
- Be sure that the battery of the “rescue machine” has the same capacity as the battery of the “machine in trouble”.

Have a Takeuchi service agent repair welding

If welding must be performed, make sure that it is done by a qualified person in a properly equipped workplace. To prevent any part from breaking down or being damaged due to overcurrent or sparks, observe the following.

- Disconnect the wiring from the battery before doing electric welding.
- Do not continuously apply 200 V or more.
- The earth ground must be connected within one meter from the welding section. Do not connect the earth ground near to an electronically controlled device/ instrument or connectors.
- Make sure that there are no seals or bearings between the welding section and the earth ground.
- Do not connect the earth ground around the pins for the working equipment or hydraulic cylinders.
- When welding is to be done on the machine body, disconnect the connectors for the electronically controlled devices before working.

Vibrations operators are subject to

According to the results of the tests conducted to determine the vibrations transmitted to the operator by the machine, the upper limbs are subjected to vibrations lower than 2.5 m/s^2 (8.2 ft/s^2) while the seated part of the body is subjected to vibrations lower than 0.5 m/s^2 (1.64 ft/s^2).

Checks after maintenance

- Gradually increase the engine speed from a low idle to maximum speed and check that there is no oil or water leaking from the serviced parts.
- Operate each control lever and check that the machine is operating properly.

Disposing of wastes



- Always collect oil that is drained from the machine in containers. Improperly disposed waste oil can cause environmental harm.
- Follow appropriate laws and regulations when disposing of harmful objects such as oil, fuel, coolant, solvent, DEF/AdBlue®, filters and batteries.

Handling of poisonous chemicals

Poisonous chemicals will cause serious injury if directly contacted.
Poisonous chemistry used in this machine includes grease, battery solution, coolant, DEF/AdBlue®, paint and adhesive agent.
Handle the poisonous chemicals properly with care.

SAFETY SIGNS (DECALS)

For the safety of the operator and the personnel working around the site, safety signs (decals) are placed at certain locations on the machine as shown below. Walk around the machine with this manual, and check the content and location of these safety signs. Review these signs and the operating instructions in this manual with your machine operators.

- Keep the signs clean and legible. If any of the safety labels is peeling or damaged and becomes difficult to read, replace it with a new one. Please include your product serial number when ordering a new sign from the Takeuchi service agent.
- When a part/unit to which a safety sign is attached is replenished, a new sign must be attached to the new part/unit.

SAFETY SIGNS (DECALS)

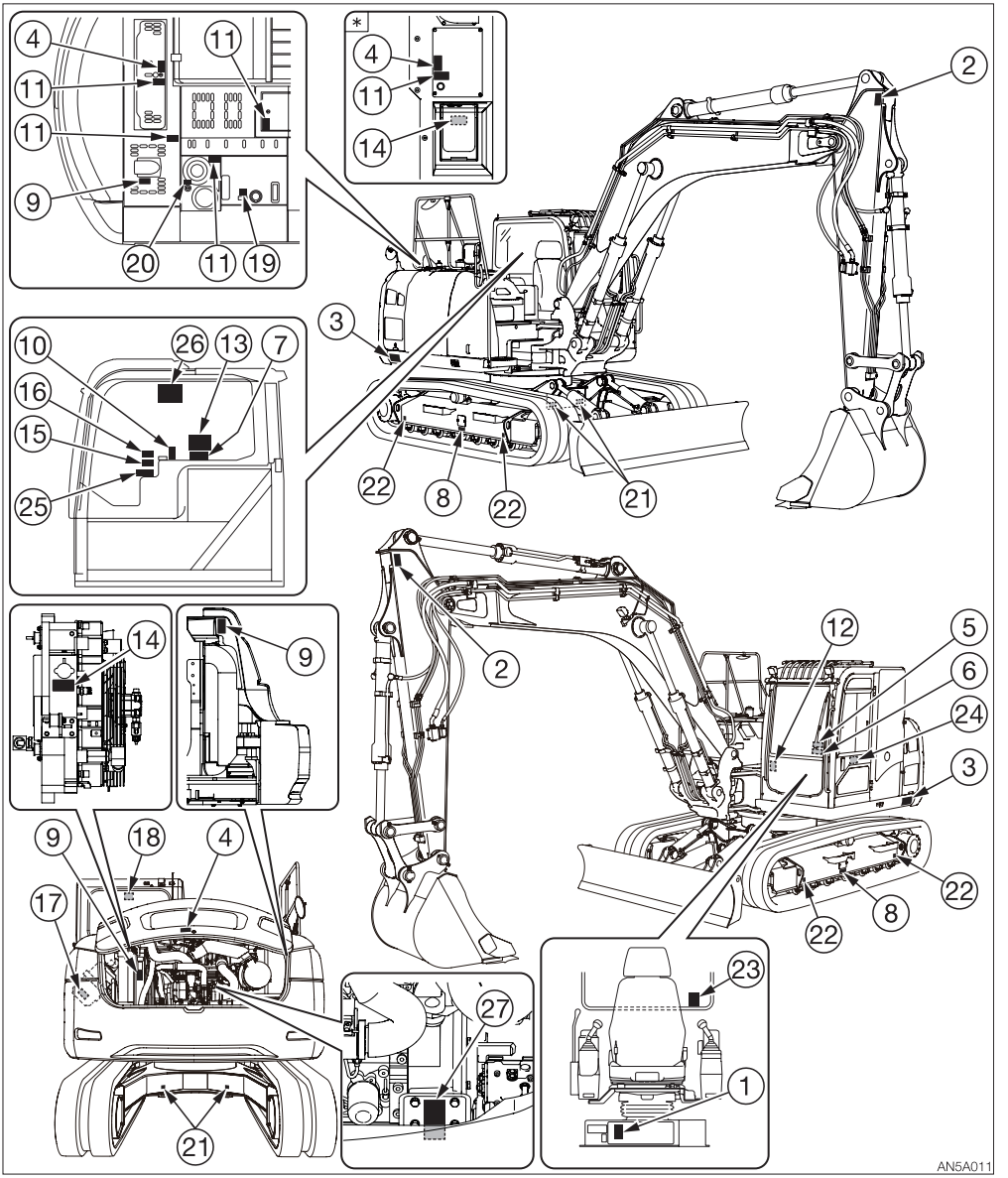

*: Low noise package

1. No.08810-31556



Warning
Read and understand this manual before performing any operation, inspection or maintenance on this machine.

3. No.05793-00011
Safety Distance
Do not get near or stand within the machine working area.

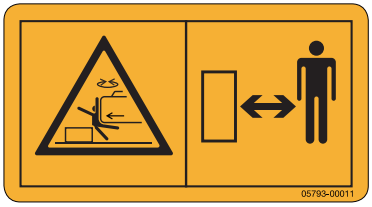

4. No.03793-66006
Hazard of rotating parts
Turn off before inspection and maintenance.



5. No.08810-31557(Cab)
Hazard from falling window
After raising window, be sure to lock it in place with lock pins.



6. No.05793-00045
Hazard at lifting or lowering window
When the front window is opened or closed, it will come close to the head.
Be careful that the window does not strike the head.



2. No.05793-00049
Safety Distance
Hazard of being hit by the working device of the machine.
Keep away from machine during operation.



7. No.05693-68009 (If equipped)
Before starting lifting operation, be sure to turn on the lift overload warning switch.
An alarm sounds if an excessive weight is lifted.



8. No.05793-00052
Hazard of a flying plug from track adjuster
Read manual before adjusting track for safe and proper handing.



AN5A005E

9. No.05793-03630



Sign indicates a burn hazard from touching heated parts, such as engine, pump, or muffler during or right after operation.
Never touch when hot.

10. No.00085-01009 (If equipped)



WARNING!
Do not press the float switch while the machine is raised by the dozer blade. Doing so may cause the machine to fall.

11. No.05793-00040

Sign indicates a hazard of falling.
Do not stand on this place.



12. No.05793-03643

Be careful about the hoe attachment interference
When lowering the hoe attachment, be careful not to let it hit the undercarriage or dozer blade.
Also, make sure that the boom cylinder hose does not contact the chassis.



13. No.03593-13700

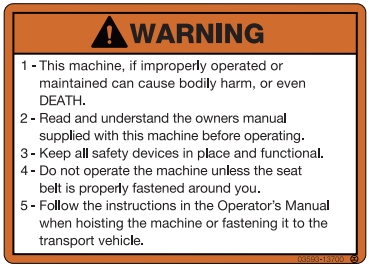

14. No.08820-31135

Sign indicates a burn hazard from spurting hot water or oil if radiator or hydraulic tank is uncapped while hot.
Allow radiator or hydraulic tank to cool before removing cap.



15. No.03593-47020 (If equipped)



15. No.03293-00066 (If equipped)

When a bucket wider than a standard one is installed, the cab (canopy) may be damaged if the bucket is fully offset to the left.



16. No.03593-32300 (If equipped)



17. No.03393-75040



AN5A014EN

18. No.08710-86051
Position of Emergency Exit

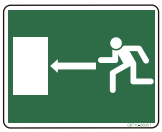

19. No.03593-06600
Diesel fuel



20. No.03593-06700
Hydraulic oil



21. No.08810-31549
Tie down point



22. No.03993-00500
Position of hoisting



23. No.03993-00400
For EU
Position of Fire extinguisher



24. No.05693-49035 (If equipped)
This value indicates the noise level outside the machine and refers to the noise perceived by the persons who are in the vicinity of the work area.

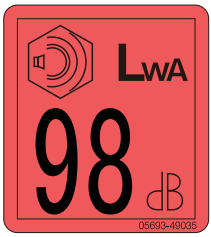

<Applicable machine models 514600003 or later>
25. No.05793-00082 (If equipped)

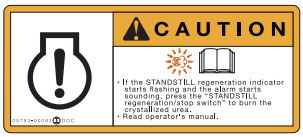

<Applicable machine models 514700002 or later>
25. No.05793-00083 (If equipped)

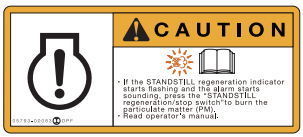

26. No.05793-00119
For USA

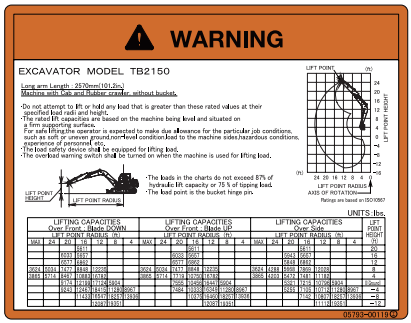

26. No.05793-00180 (If equipped)

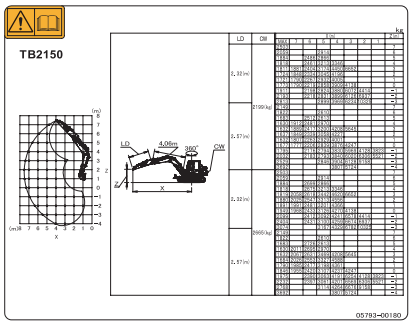

27. No.05793-00133



Danger of burns!
Keep clear of hot parts
when inspecting the engine oil.

AN5A010EN

CONTROLS



NAMES OF COMPONENTS

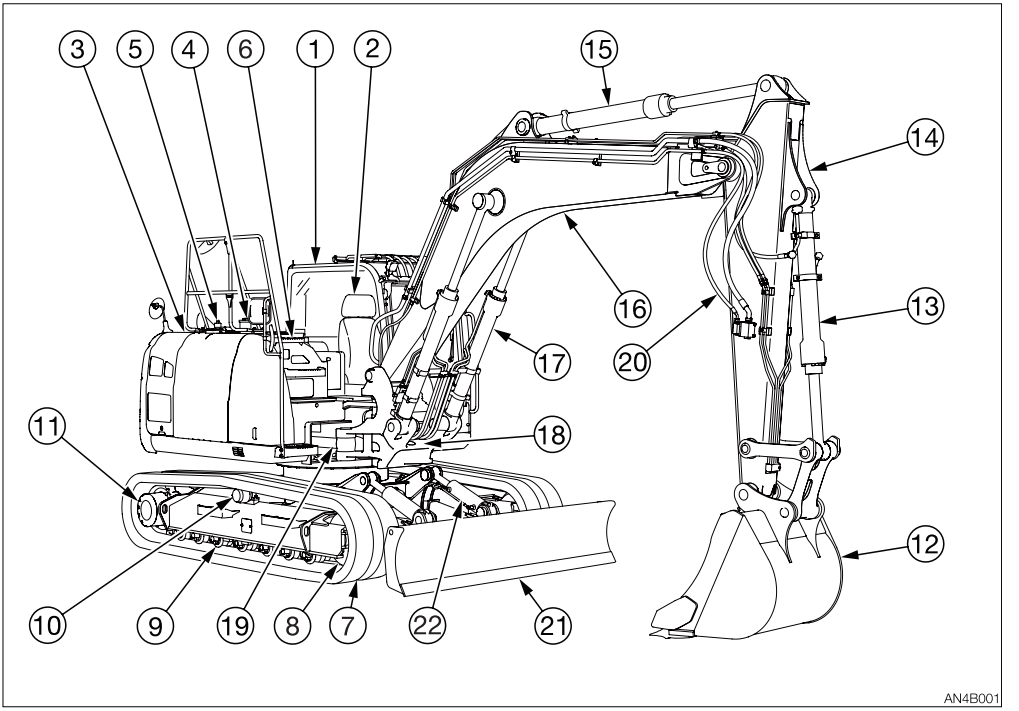

Upperstructure
1. Cab
2. Seat
3. Engine hood
4. Fuel tank
5. Hydraulic oil tank
6. DEF/AdBlue® tank

Undercarriage
7. Crawler belt
8. Idler
9. Track roller
10. Carrier roller
11. Travel motor

Working equipment
12. Bucket
13. Bucket cylinder
14. Arm
15. Arm cylinder
16. Boom
17. Boom cylinder
18. Boom bracket
19. Swing cylinder
20. Auxiliary hydraulic lines
21. Dozer blade
22. Blade cylinder

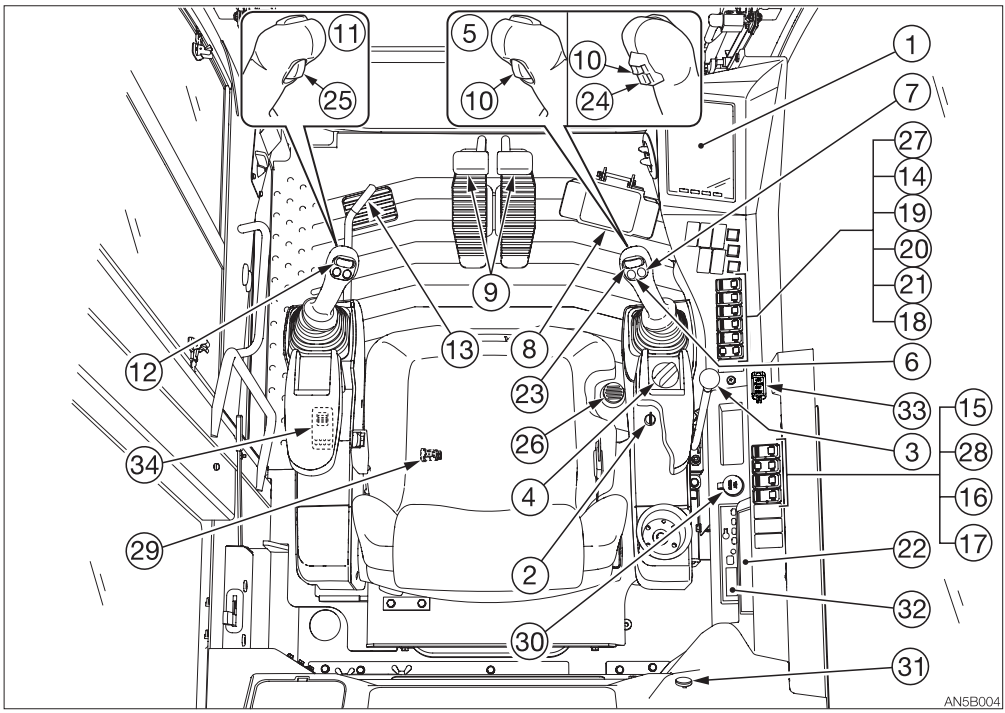

1. Multi-information display
2. Starter switch
3. Blade lever
4. Throttle controller
5. Right operating lever
6. Horn button
7. Deceleration button
8. Boom swing pedal
9. Travel levers/Pedals
10. Travel speed button
11. Left operating lever
12. Auxiliary 1st switches
13. Safety lock lever
14. Light switch
15. Detent mode switch
16. Lift overload warning switch*
17. Beacon lamp switch*
18. ECO/Highland mode switch
19. Wiper switch
20. Washer switch
21. Automatic deceleration switch*
22. AC Control panel
23. Auxiliary 2nd/4th switch*
24. Auxiliary 2/4 select button*
25. Third auxiliary hydraulic button*
26. Third auxiliary hydraulic switch*
27. Standstill regeneration/stop switch
28. Auxiliary 1st auto tank switch*
29. Engine shutdown switch
30. Power supply socket (24V)
31. Power supply socket (12V)
32. Radio
33. USB port
34. Third auxiliary hard-lock switch*

*: Subject to the specifications or optional products selected

COVERS

STARTER KEY

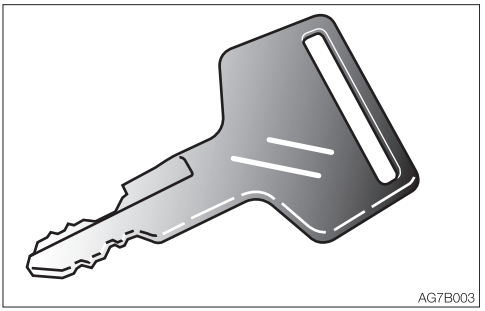

The starter key is used to start and stop the engine, as well as to lock and unlock the following components:
- Cab door
- Engine hood
- Covers

FRONT COVERS (TOOL BOX)

⚠ CAUTION

- **Never jump down from the machine. Use the steps and handrails when climbing up and down the machine, and always support your body at three points with your hands and feet.**
- **When opening the front cover, open it all the way to the position where it is securely stopped.**
- **When opening or closing the front cover, be careful not to get your hands or other parts of your body caught by the cover.**

The grease gun and tools are stored under the cover.

Opening

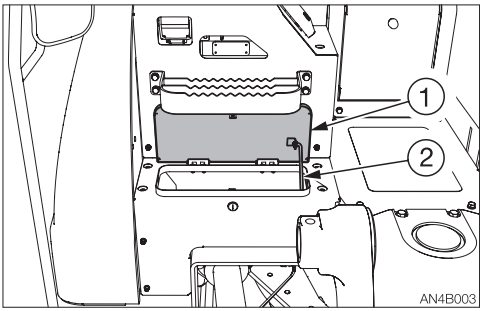

1. Insert the starter key and turn it counterclockwise to unlock the front cover (1).
2. Open the front cover (1) until it stops.

Closing

1. Support the front cover (1) by hand and release the stay (2).
2. Close the front cover (1).
3. Insert the starter key and turn it clockwise to lock the front cover (1).

FRONT COVER (FOR MAINTENANCE)

⚠ WARNING

- **Stop the engine and allow each part of the machine to cool down before performing maintenance.**
- **Do not leave the front cover open on a windy day or if the machine is parked on a slope.**
- **When opening or closing the front cover, be careful not to get your hands or other parts of your body caught by the cover.**

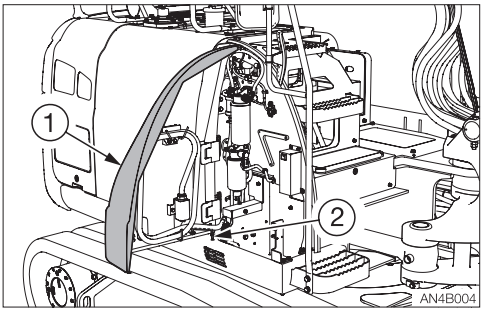

Opening

1. Insert the starter key and turn it clockwise to unlock the front cover (1).
2. Open the front cover (1).

Note: It may need to press the keyhole to open the cover.

3. Use the stay (2) to secure the front cover (1).

Closing

1. Support the front cover (1) by hand and release the stay (2).
2. Close the front cover (1).
3. Insert the starter key and turn it counterclockwise to lock the front cover (1).

CENTER COVER

⚠ CAUTION

Never jump down from the machine. Use the steps and handrails when climbing up and down the machine, and always support your body at three points with your hands and feet.

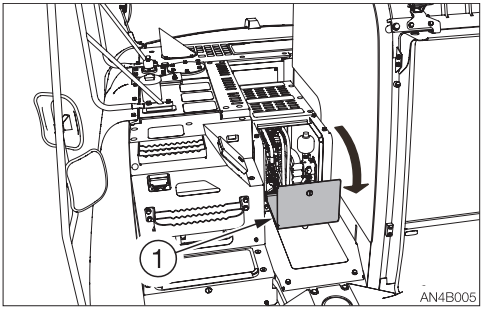

Opening

1. Insert the starter key and turn it counterclockwise to unlock the center cover (1).
2. Open the center cover (1).

Closing

1. Close the center cover (1).
2. Insert the starter key and turn it clockwise to lock the center cover (1).

FUEL FILLER PORT

⚠ WARNING

- Never jump down from the machine. Use the steps and handrails when climbing up and down the machine, and always support your body at three points with your hands and feet.
- Do not smoke and keep away from heat or flame while filling the fuel tank.
- Fill the fuel tank in a well ventilated place, with the engine turned off.
- Clean up spilled fuel immediately.
- Do not fill the fuel tank to capacity. Allow room for oil expansion.
- Securely tighten the fuel filler cap.

Opening

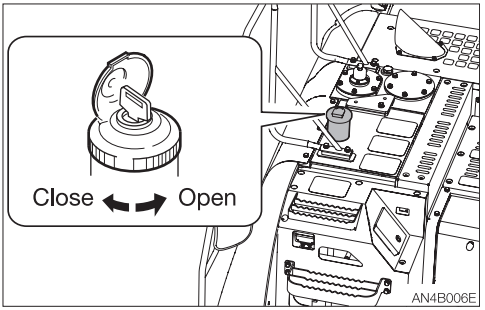

1. Open the cover, insert the key and turn it clockwise to unlock the cap.
2. Turn the fuel filler cap clockwise and remove it.

Closing

1. Install the fuel filler cap to the fuel filler port, and then turn the cap counterclockwise to close it.
2. Lock the fuel filler cap.

DEF/ADBLUE® REFILL PORT

⚠ WARNING

- When removing the cap from the DEF/AdBlue® tank, take care not to inhale steam.
- Do not put anything else other than DEF/AdBlue® solution in the DEF/AdBlue® tank. Putting liquids, particularly light oil or gasoline, in the tank could cause a fire or damage the SCR system. If this is accidentally done, contact a Takeuchi service dealer.

⚠ CAUTION

- DEF/AdBlue® is a colorless, transparent, odorless and non-hazardous aqueous solution (32.5% urea, 67.5% water, freezes at –11°C), and is harmless to the human body. In very rare cases, however, inflammation could occur in some people, and thus proper actions should be taken as follows.
- If skin contact occurs, flush with water. If there are changes in the skin condition or if there is pain, immediately seek medical attention.
- If accidentally swallowed, drink one or two glasses of water or milk and immediately seek medical attention.
- If eye contact occurs, immediately flush with a large amount of clean water and seek medical attention.

IMPORTANT:

- Do not use expired DEF/AdBlue® solution (including solution left in the tank) stored for a long period. Doing so could cause ammonia slip, degraded NOx conversion efficiency or device damage.
- When handling DEF/AdBlue®, do not use anything such as cotton work-gloves whose fibers could get into the solution. Doing so could cause clogging of the DEF/AdBlue® filter or urea deposit at the DM injection port.

Opening

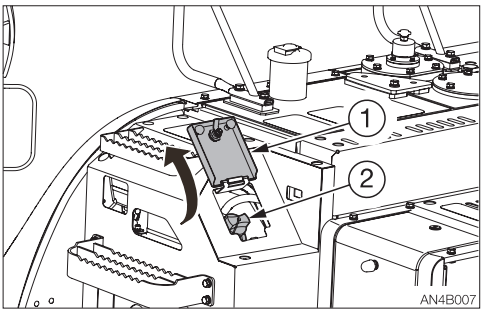

1. Insert the starter key and turn it counterclockwise to unlock the cover (1).
2. Turn the DEF/AdBlue® tank cap (2) counterclockwise and remove it.

Closing

1. Install the DEF/AdBlue® tank cap (2) on the filler port, and then turn the cap clockwise to close.
2. Close the cover (1) and lock it.

RIGHT SIDE COVER

⚠ WARNING

- **Before opening the side cover, be sure to stop the engine. If a hand or tool becomes trapped in the rotating or moving part, serious injury could result.**
- **When opening or closing the side cover, be careful not to get your hands or other parts of your body caught by the cover.**

Opening

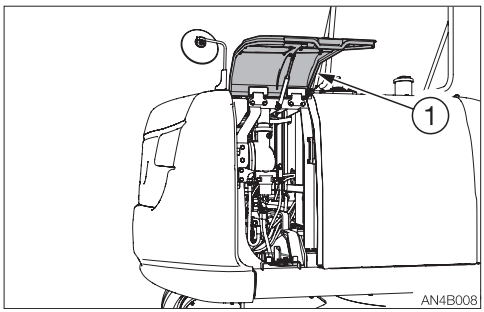

1. Insert the starter key and turn it counterclockwise to unlock the side cover (1).
2. Push in the key hole with your thumb and open the side cover (1).

Closing

1. Close the side cover (1) and press it down until a click is heard.

LEFT SIDE COVER

⚠ WARNING

- **Before opening the side cover, be sure to stop the engine. If a hand or tool becomes trapped in the rotating or moving part, serious injury could result.**
- **When opening or closing the side cover, be careful not to get your hands or other parts of your body caught by the cover.**

Opening

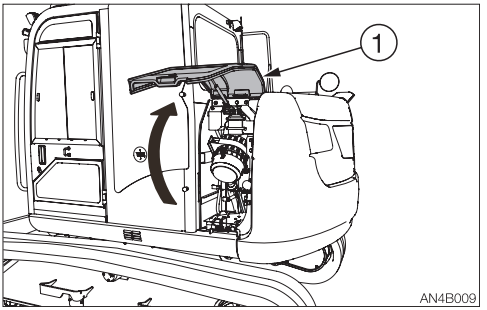

1. Insert the starter key and turn it counterclockwise to unlock the side cover (1).
2. Push in the key hole with your thumb and open the side cover (1).

Closing

1. Close the side cover (1) and press it down until a click is heard.

ENGINE HOOD

⚠ WARNING

Before opening the engine hood, be sure to stop the engine. If a hand or tool becomes trapped in the rotating or moving part, serious injury could result.

Opening

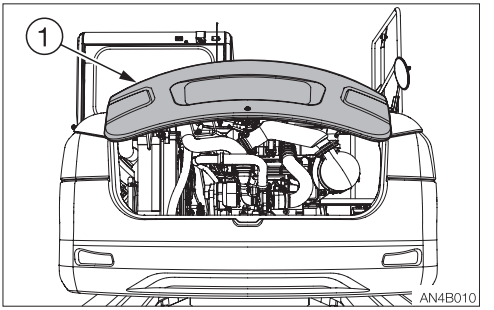

1. Insert the starter key and turn it counterclockwise to unlock the engine hood (1).
2. Push in the key hole with your thumb and open the engine hood (1).

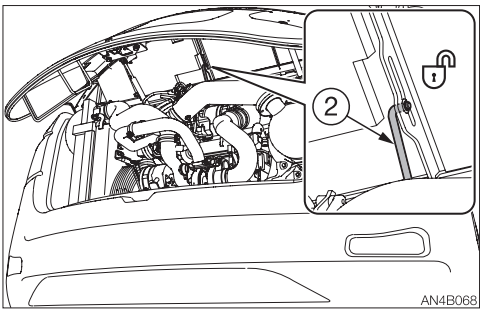

3. Releasing the lock (2) allows the engine hood to open more widely.

Closing

1. Close the engine hood (1) and press down the edge of it until a click is heard.

MAINTENANCE COVER

⚠ WARNING

- **Before opening the maintenance cover, be sure to stop the engine. If a hand or tool becomes trapped in the rotating or moving part, serious injury could result.**
- **When opening the maintenance cover, open it all the way to the position where it is securely stopped.**
- **When opening or closing the maintenance cover, be careful not to get your hands or other parts of your body caught by the cover.**
- **Before performing maintenance on the top of the machine, clean the place you will work on and observe the following to prevent falling.**
  - **Do not spill oil or grease.**
  - **Do not leave tools scattered around.**
  - **Watch your step when walking.**
- **Never jump down from the machine. Use the steps and handrails when climbing up and down the machine, and always support your body at three points with your hands and feet.**

For inspection and maintenance of the engine, open this cover.

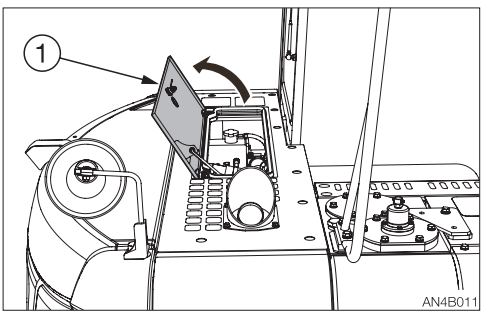

<Low noise package>

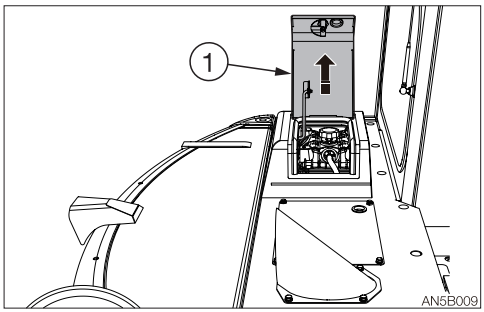

Opening

1. Insert the starter key and turn it counterclockwise to unlock the maintenance cover (1).

Note: For low noise package, turn it clockwise to unlock.

2. Hook your finger on the hole and open the maintenance cover (1) all the way.

Closing

1. Close the maintenance cover (1) and lock it.

CAB

CAB DOOR

⚠ WARNING

When getting on or off the cab, first open the door all the way until it is secured in the catch and check that it does not move.

Open the door fully and press it against the catch at the back of the door to secure it in place.
The door must be locked when getting on or off the machine and while in operation.

Locking and unlocking

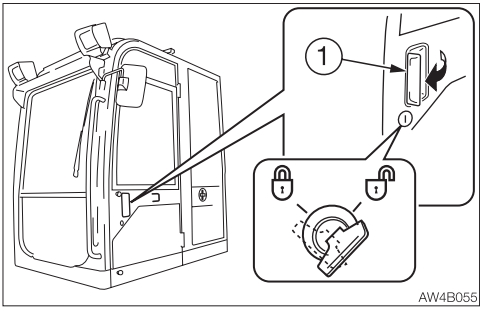

Insert the starter key and turn it.

Opening

1. Pull the knob (1) towards you and open the door.

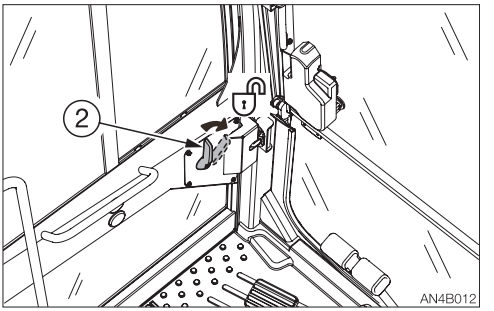

   To open the door from inside the cab, push the lever (2) to the lower.
2. Open the door fully and press it against the cab to secure it in place.

Closing

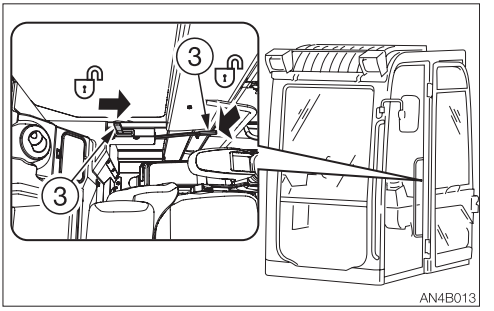

1. Push the release lever (3) downward.
2. Close the released door.

FRONT WINDOW

⚠ WARNING

- **Grasp the handles firmly with both hands when opening and closing the front window. Your head or hands may get caught if it slips from your hands.**
- **When the front window is opened or closed, it will come close to the head. Be careful that the window does not strike the head.**
- **When you open the front window, be sure to lock it in place with the lock pins on the left and right sides. The window may fall if it is not locked in place.**

Opening

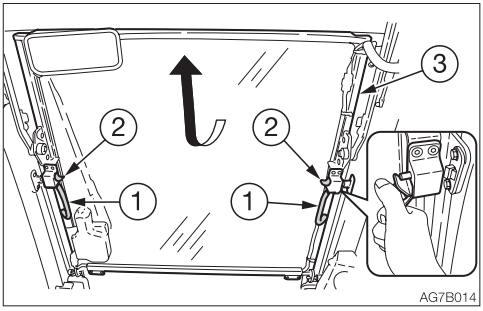

1. Park on a level surface and stop the engine.
2. Set the safety lock lever to the locked position.
3. Grasp the left and right handles (1) and press the knobs (2) with your thumb to release the lock.
4. Pull the front window (3) toward you and lift while doing so.

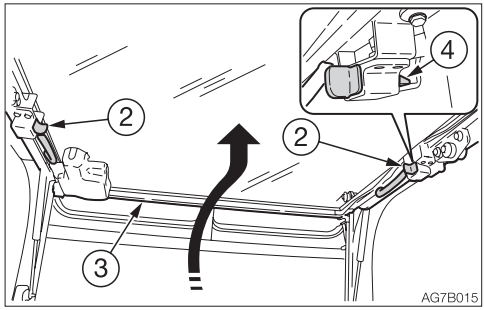

5. Release your thumb from the knobs (2) and then lift the front window (3) fully and lock the front window with lock pin (4).

Closing

⚠ WARNING

When closing the front window slowly so as not to hit your head. Lowering the window abruptly may result injury or damage the front window.

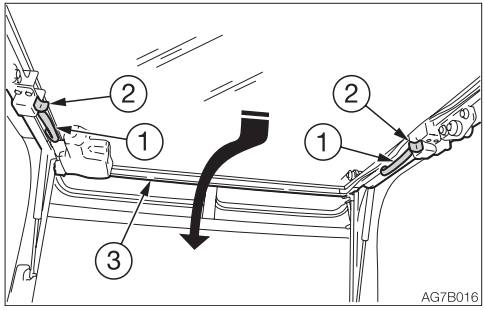

1. Grasp the left and right handles (1) and press the knobs (2) with your thumb to release the lock.
2. Pull down the front window (3) and while doing so, slide it to the front and slowly lower it.

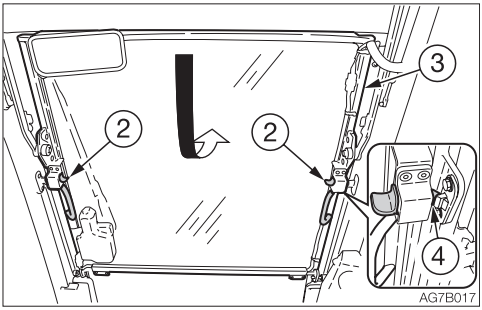

3. Release your thumb from the knobs (2) and then press the front window toward front and lock the front window with lock pin (4).

LOWER FRONT WINDOW

Removing

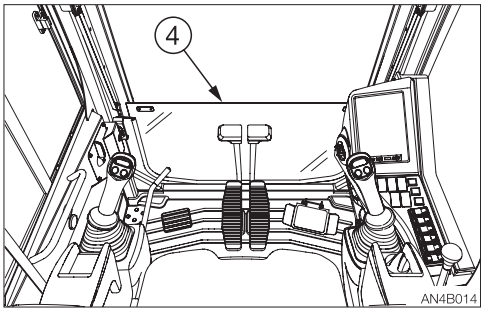

1. Open the front window and stow it in the ceiling.
2. Slowly lift the lower front window (4).

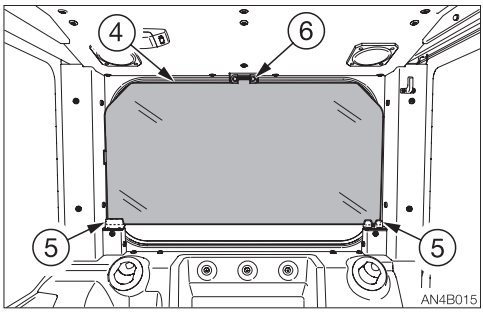

3. Place the bottom of the front window through the guides (5), and then secure the window with the support (6).

SIDE WINDOW

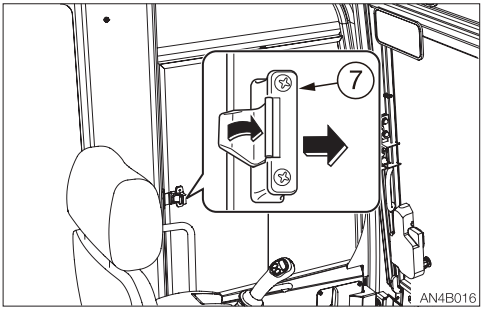

1. Grasp the catch (7), unlock it and open the side window.
2. To close the side window, close it until a click is heard.

EMERGENCY EXIT

Rear window

If you should become trapped inside the cab, remove the rear window to get out.

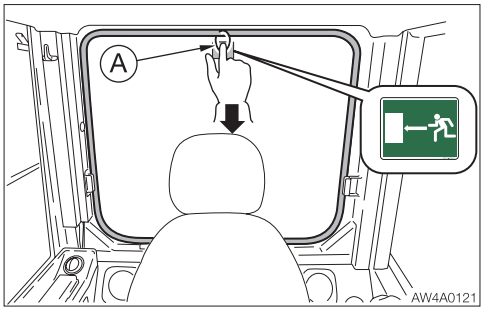

1. Pull off the ring (A) and remove the tip of the rubber wedge.
2. Grasp and pull the tip of the rubber wedge to remove the entire rubber wedge.
3. Kick out the rear window. Note that the glass may break. Be careful not to get injured.

SEAT AND SEAT BELT

SEAT

⚠ WARNING

- **Adjust and secure the seat.**
- **Do not make any adjustments while operating the machine.**
- **Do not set the backrest to its maximum reclining position and slide the seat backwards at the same time. Doing so may damage the rear window or cause injury.**
- **Remember that the backrest returns to the forward position abruptly due to the spring force.**

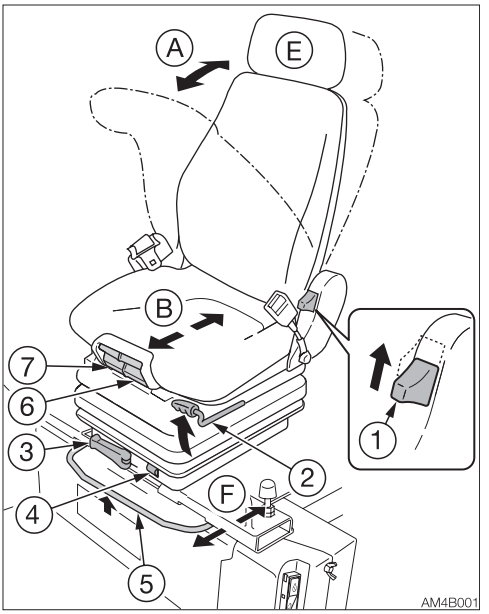

(A) Adjusting the backrest angle

1. Sit up and sit back in the chair.
2. Pull up the lever (1), recline the backrest by using the spring force. Release the lever (1) at the desired angle to secure the backrest.

(B) Fore-and-aft adjustment

1. Pull up the lever (2) and slide the seat backward or forward to the desired position for operation of machine.
2. Release the lever (2) at the desired position to secure the seat.
   Adjustment range: 15 positions, in 150 mm (5.9 in.)

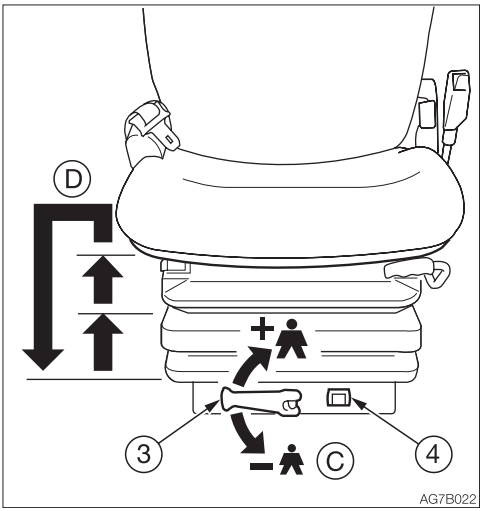

(C) Adjusting according to operator's weight

1. Turn the handle (3) until the scale (4) indicates the weight of operator.
   Adjustment range: 50 to 130 kg (110 to 287 lbs)

(D) Adjusting the height of the seat

Upward

1. Lift the seat to first or second position click-stop.
   Adjustment ranges: 2positions, in 60mm (2.36 in.)

Downward

1. First lift the seat to highest position, then the seat can be lowered to lowest position.

(E) Adjusting the headrest (Option)
The headrest (E) can be moved upward or downward.
1. Grab the headrest (E) with both hands, and move upward or downward to the desired position.

(F) Adjusting the operating lever stand

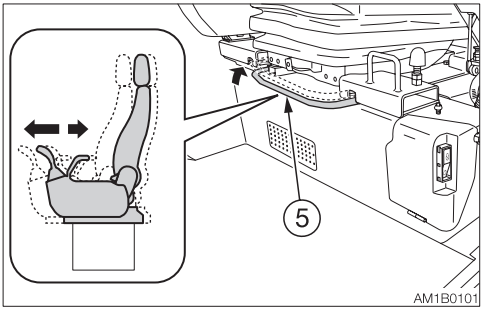

1. Pull up the lever (5) and slide the lever stand (seat).
2. Release the lever (5) at the desired angle to secure the lever stand (seat).
   Adjustment range: 7 positions, in 70 mm (2.8 in.)

(G) Adjusting the seat pan angle

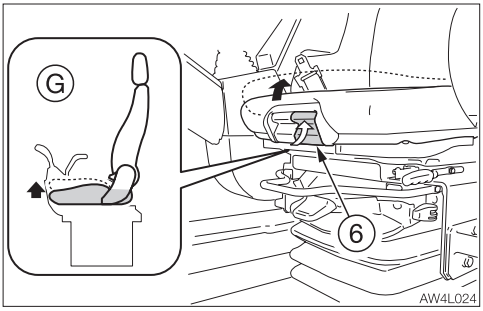

The angle of the seat pan can be individually adjusted.
To adjust, lift the left side handle (6). Use the pressure applied to the seat to set the seat pan to the desired angle.

(H) Adjusting the seat depth

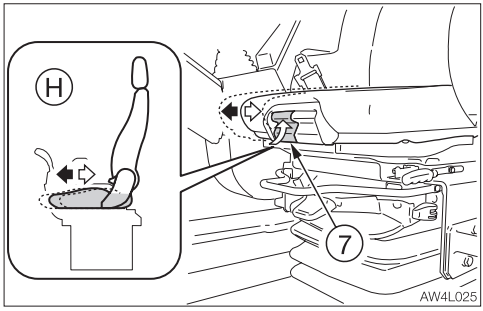

The depth of the seat pan can be individually adjusted.
To adjust, lift the right side handle (7). Move the seat cushion forward or backward until the desired seat depth is obtained.

SEAT BELT

⚠ WARNING

Be sure to fasten the seat belt securely before starting the engine.

Fastening the seat belt
1. Adjust the seat to the desired position for operation, sit up and sit back in the chair.
2. Pull the seat belt to the desired length.

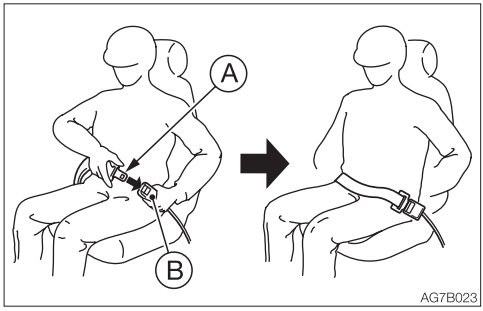

3. Make sure that the belt is not twisted and then insert the tongue plate (A) into the buckle (B) of the seat belt until you hear a clicking sound as it locks in place.
4. Check if the belt is securely locked by pulling it, and arrange the belt around your waist.

Releasing the seat belt

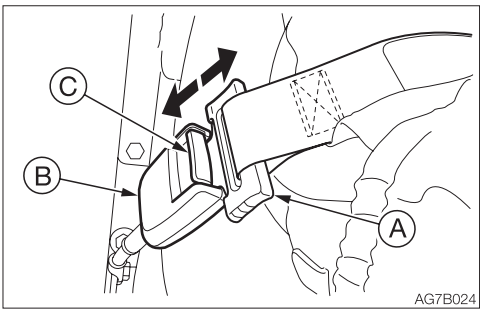

1. Grasp the tongue plate (A) and press the button (C) on the buckle (B).
   The seat belt retracts back into its original position.

AIR SUSPENSION SEAT

⚠ WARNING

- **Adjust and secure the seat.**
- **Do not make any adjustments while operating the machine.**
- **Do not set the backrest to its maximum reclining position and slide the seat backwards at the same time. Doing so may damage the rear window or cause injury.**
- **Remember that the backrest returns to the forward position abruptly due to the spring force.**

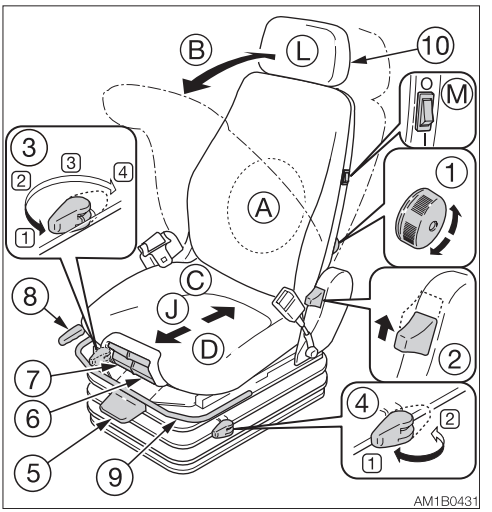

(A) Adjusting the lumber support

1. Turning the knob (1) in the direction of the arrow causes the lumber of the backrest to curve outwards.
2. Turning the knob (1) further removes the curve and returns the seat to its original position.

(B) Adjusting the backrest angle

1. Sit up and sit back in the chair.
2. Pull up the lever (2), adjust the backrest rear angle by using the spring force on the chair back. Release the lever (2) at the desired angle to secure the backrest.

(C) Adjusting the absorber

The seat adjustment using the absorber is applicable for various traveling conditions on roads or off roads. The cushioning effect can be individually set for each case.
Turn the lever (3) to the desired position and release.

Positions between
1: Soft cushioning
and
4: Hard cushioning

(D) The fore/aft isolator
It is activated under certain conditions such as crashing. Impacts of crash applied in the operating direction can be well absorbed by the operator's seat. Switching can be done with the lever (4).

Position 1: Fore/aft isolator on
Position 2: Fore/aft isolator off

(E) Adjusting according to operator's weight

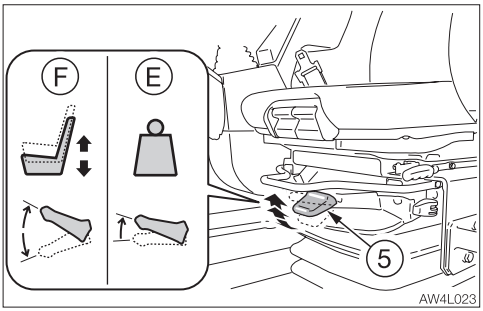

IMPORTANT: Before performing the adjustment by weight, stop the machine and remain seated. Otherwise, the weight cannot be detected, resulting in malfunction.
IMPORTANT: Be sure to set the absorber to the soft cushioning position (1) when performing the adjustment by weight.

The seat should be adjusted according to the operator's weight. Briefly pull the actuator lever (5) of the automatic weight and height adjuster.

(F) Adjusting the seat height

IMPORTANT: Be sure to set the absorber to the soft position (1) when performing the height adjustment.
IMPORTANT: Do not operate the lever (5) (compressor) for one minute or more. Doing so will cause compressor failure. To protect the compressor, wait for at least three minutes before operating the lever (5) again.
IMPORTANT: If the height adjustment function fails, first lower the seat to the lowest position. Then, adjust the height again.

The seat height can be steplessly adjusted using the pneumatic mechanism.

To adjust, push up or push down the lever (5) all the way up or down. When the seat reaches the level where it cannot be raised anymore even the lever (5) is pushed up, that level is the highest. If this happens, the height is automatically lowered a small distance to maintain the stroke of suspension.
Adjustment stroke: 80 mm (3.1 in.)

(G) Adjusting the seat pan angle

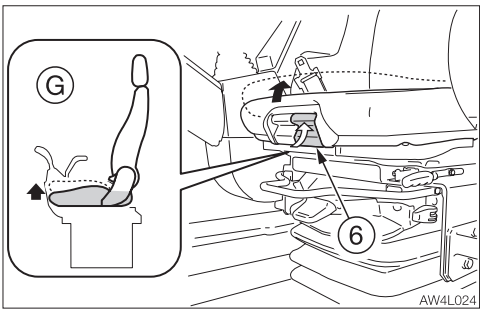

The angle of the seat pan can be individually adjusted.
To adjust, lift the left side handle (6). Use the pressure applied to the seat to set the seat pan to the desired angle.

(H) Adjusting the seat depth

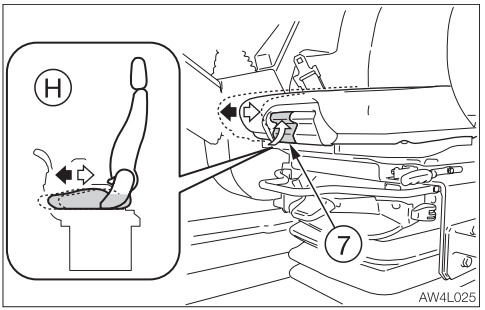

The depth of the seat pan can be individually adjusted.
To adjust, lift the right side handle (7). Move the seat cushion forward or backward until the desired seat depth is obtained.

(J) Adjusting fore-and-aft

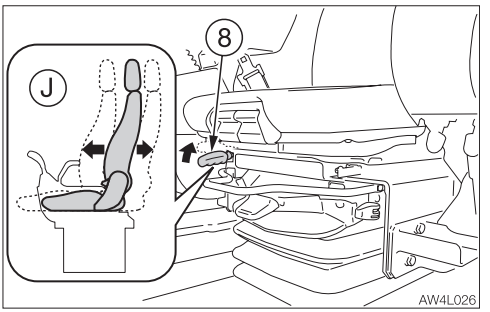

1. Pull up the lever (8) and slide the seat backward or forward to the optimum position for operation.
2. Release the lever (8) at the optimum position to secure the seat.
   Adjustment range: 17 positions, in 170 mm (6.7 in.)

(K) Adjusting the operating lever stand

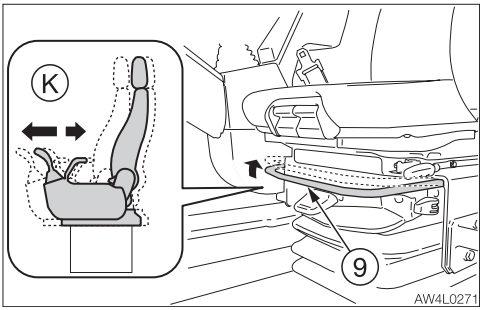

1. Pull up the lever (9) and slide the lever stand (seat).
2. Release the lever (9) at the optimum position to secure the lever stand (seat).
   Adjustment range: 7 positions, in 70 mm (2.8 in.)

(L) Adjusting the headrest height

1. Grab the headrest (10) with both hands, and move upward and downward. Adjust the height so that the headrest center is positioned behind your ears.

(M) Seat heater

⚠ CAUTION

- **Using the seat heater over an extended period of time may cause burns. People feeling ill or having sensitive skin, in particular, should be careful not to do so.**
- **Do not use it with a blanket or cushion placed on the seat.**
- **Clean up spilled water or soft drink immediately with a dry cloth. Dry the seat well before using the heater again.**

IMPORTANT: The battery voltage becomes low if the seat heater is left on for a long time when the engine is stopped.

O.....OFF
I.....ON

MULTI-INFORMATION DISPLAY

HOME SCREEN

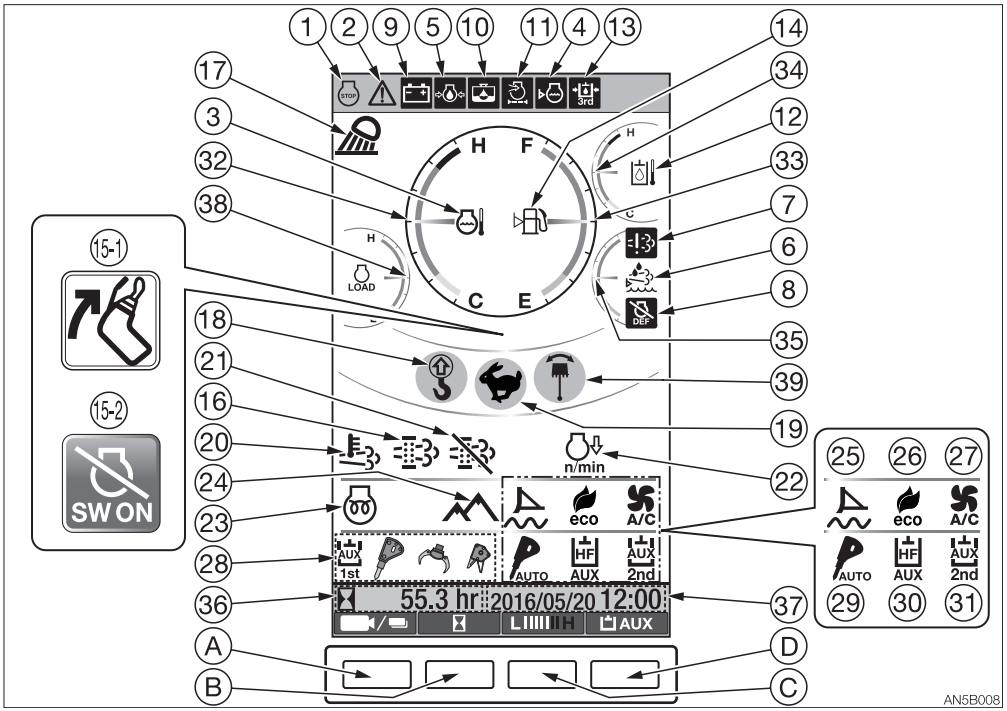

For explanation purposes, all lamps on the screen image above are in the lit condition. This screen image is different from that of the real operation. In the actual operation, if a warning is given or any function is selected, the corresponding symbol appears enlarged at the center of the display.

When the starter switch is set to ON, “TAKEUCHI” is shown. Then, the Home screen appears with the third auxiliary hydraulic warning lamp (If equipped) lit. The machine system is normal if the lamp goes off after the engine is started.

WARNING LAMPS

If a warning is given, the corresponding warning lamp is displayed. If multiple warnings are given at the same time, only the warning lamp with the smallest symbol number is displayed enlarged. Other warning lamps are displayed at their original locations. If any other warning occurs while one warning lamp is being displayed enlarged, the warning lamp of the subsequent warning remains in its original location.

IMPORTANT: If a warning lamp flashes and an alarm is sounded, immediately stop all operations and check the corresponding component.
Refer to "If a warning lamp flashes" on pages 6-13 to 6-15.

1. Engine stop request/ECM error warning lamp

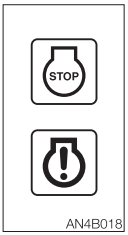

..... While the starter switch is ON, if a serious engine problem occurs and thus immediate engine stop is required, this warning lamp starts flashing. Immediately stop the engine and inspect the problem.

..... This warning lamp flashes and an alarm is sounded if the Electronic Control Module (ECM) detects an engine problem while the starter switch is in the ON position. The problem detected is recorded as an ECM error.
Refer to "Engine error code list" on pages 6-18 to 6-33.

2. Vehicle and engine emergency lamp
This lamp appears enlarged and flashes with an alarm sound if there is a problem with the machine. Go to "(7) Error code display" from the Menu screen, get the vehicle or engine error code number, and consult your sales or service dealer referring to the "Vehicle error code list" or "Engine error code list" in this manual.
Refer to "Menu screen" on page 2-32.
Refer to "(7) Error code display" on page 2-45.
Refer to "Vehicle error code list" on pages 6-16 to 6-17.
Refer to "Engine error code list" on pages 6-18 to 6-33.

3. Coolant temperature warning lamp
This lamp flashes and an alarm is sounded if the engine coolant temperature becomes abnormally high while the engine is running.

4. Coolant level warning lamp
This lamp flashes if the coolant level falls below a certain point while the engine is running.

5. Engine oil pressure warning lamp
This lamp flashes and an alarm is sounded if the engine oil pressure becomes abnormally low while the engine is running.

6. DEF/AdBlue® level warning lamp

If the level of DEF/AdBlue® substantially decreases while the engine is running, this lamp either lights up or flashes and the buzzer sounds.



..... Orange: The lamp lights up if the level of DEF/AdBlue® decreases to less than 15% (Mode 1).
The lamp starts flashing if the level of DEF/AdBlue® decreases to less than 10% (Mode 2).
The buzzer starts sounding if the level of DEF/AdBlue® decreases to less than 5% (Mode 3).
From 10 minutes after the detection of “less than 5%”, the lamp continues to flash and the buzzer continues to sound for 5 minutes. The engine speed is limited (Mode 4).

..... Red: From 15 minutes after the detection of “less than 5%”, the lamp continues to flash and the buzzer continues to sound for 5 minutes. The engine speed is limited (Mode 5).
From 20 minutes after the detection of “less than 5%”, the lamp continues to flash and the buzzer continues to sound. The engine is practically in the idling stage (Mode 6).

Note: The Selective Catalytic Reduction (SCR) system is a system to reduce NOx emissions into the atmosphere, by spraying the DEF/AdBlue® solution (reduction agent) into the exhaust gas.

7. SCR system warning lamp

If an abnormality is detected in the SCR system while the engine is running, this lamp either lights up or flashes and the buzzer sounds.

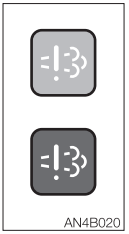

..... Orange: The lamp remains lit and the buzzer continues to sound for the first 1 hour and 50 minutes after the detection of abnormality (Mode 1).
From 1 hour and 50 minutes after the detection of abnormality, the engine speed is limited for 1 hour and 55 minutes (Mode 2).

..... Red: From 3 hours and 45 minutes after the detection of abnormality, the lamp continues to flash and the buzzer continues to sound for 10 minutes. The engine speed is limited (Mode 3).
From 3 hours and 55 minutes after the detection of abnormality, the lamp continues to flash and the buzzer continues to sound. The engine is practically in the idling stage (Mode 4).

8. DEF/AdBlue® quality indicator lamp
If the quality of the DEF/AdBlue® deteriorates while the engine is running, this lamp either lights up or flashes and the buzzer sounds.



..... Orange: The lamp remains lit and the buzzer continues to sound for the first 1 hour and 50 minutes after the detection of abnormality (Mode 1). From 1 hour and 50 minutes after the detection of abnormality, the engine speed is limited for 1 hour and 55 minutes (Mode 2).

..... Red: From 3 hours and 45 minutes after the detection of abnormality, the lamp continues to flash and the buzzer continues to sound for 10 minutes. The engine speed is limited (Mode 3). From 3 hours and 55 minutes after the detection of abnormality, the lamp continues to flash and the buzzer continues to sound. The engine is practically in the idling stage (Mode 4).

9. Battery charge warning lamp
This lamp flashes and an alarm is sounded if a problem rises in the charging system while the engine is running.

10. Water separator warning lamp
This lamp flashes if the water is detected within the water separator while the starter switch is in the ON position.

11. Air cleaner warning lamp
This lamp flashes and an alarm is sounded if the air cleaner filter is clogged while the engine is running.

12. Hydraulic oil temperature warning lamp
This lamp flashes if the hydraulic oil temperature becomes abnormally high while the engine is running.

13. Third auxiliary hydraulic warning lamp
This lamp starts flashing and an alarm sounds if the fixed side (left “e”) pressure of the auxiliary 3rd drops abnormally while the engine is running, or while the quick-hitch is being removed or installed.

14. Fuel level warning lamp
This lamp flashes when the fuel level is low while the starter switch is in the ON position.

15-1. Safety start warning lamp

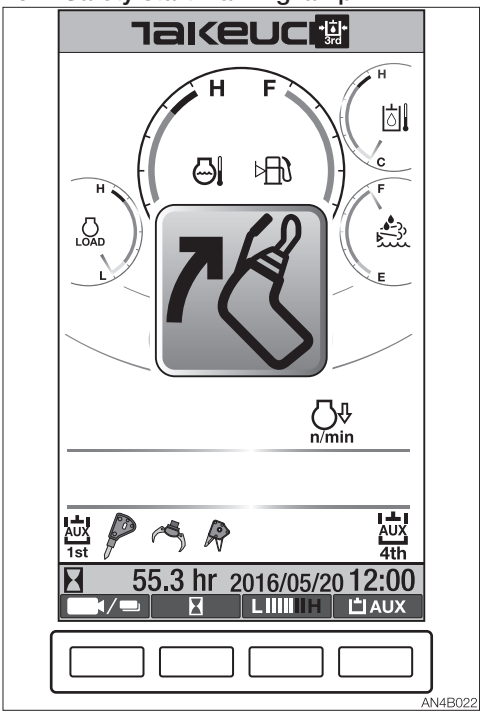

This lamp appears enlarged on the display and the buzzer sounds if the engine is started when the safety lock lever is in the unlock position. The engine cannot be started. First, set the safety lock lever to the lock position, and then start the engine.

15-2. Engine shutdown switch warning lamp (If equipped)



This warning lamp appears enlarged on the display and an alarm sounds if the engine is started when the engine shutdown switch is ON. The engine cannot be started. First, turn off the engine shutdown switch, and then start the engine.

16. Standstill regeneration in process/ Demand indicator lamp/Ash lamp <Applicable machine models 514700252 or later>

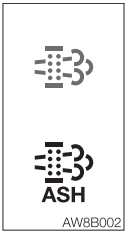

..... In process/Demand indicator lamp

..... Ash lamp

In process/Demand indicator lamp: In the SCR system, when crystallization is detected or soot is accumulated in the DPF, this indicator lamp starts flashing to indicate that the standstill regeneration must be performed. The lamp changes from flashing to solid when the standstill regeneration is started, and it goes off when the regeneration is ended.
If the machine continues to operate without performing standstill regeneration, the flashing becomes rapid to indicate that it is no longer possible to start the standstill regeneration by operating the switch. In this case, ask your sales or service dealer for help.
The time interval between the two regeneration requests is shortened in proportion to the number of regenerations performed.
Very short intervals between the two requests for standstill regeneration can be an indication of a defect. In this case, ask your sales or service dealer for help.

Ash lamp <Applicable machine models 514700252 or later>: The lamp lights up if the ash load exceeds 100% (Mode 1).
The lamp starts flashing and the buzzer starts sounding if the ash load exceeds 105% (Mode 2).

The lamp continues to flash and the buzzer continues to sound if the ash load exceeds 110%. The ECM error warning indicator lamp also flashes (Mode 3).
This lamp lights up or flashes to indicate that the DPF must be replaced. Refer to “Replacing the diesel particulate filter <Applicable machine models 514700252 or later>” on page 5-79.

INDICATORS

17. Working light indicator
Lights up when the working light is turned on.

18. Lift overload warning indicator lamp
This lamp turns on when the lift overload warning switch is turned on.

19. Travel speed indicator lamp

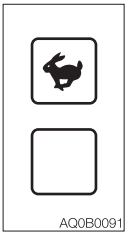

..... High-speed travel

..... Low-speed travel

This lamp turns on when the travel speed button is set to the 2nd (high) speed.

20. Exhaust temperature warning indicator lamp
This indicator lights up to warn if the exhaust temperature is abnormally increased. Check for any flammable items around the exhaust piping.

21. DPF auto regeneration/Standstill regeneration stop indicator lamp/low coolant temperature indicator lamp

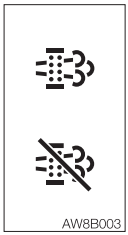

..... DPF auto regeneration under way

..... Standstill regeneration stop

DPF auto regeneration under way <Applicable machine models 514700252 or later>
The DPF regeneration is automatically performed by the engine when certain criteria are met. The operator only has to check the display.

Standstill regeneration stop
This lamp lights up when the standstill regeneration or the auto regeneration is stopped. The DPF auto regeneration is not performed while the lamp is lit. Perform the standstill regeneration if the Standstill generation in process/Demand indicator lamp is flashing.
Refer to “Standstill regeneration/Stop switch” on page 2-59.

< Applicable machine models 514700393 or later>



..... Low coolant temperature indicator lamp

The low coolant temperature indicator lamp turns on if the engine protection function is activated due to low coolant temperature.

Indicator lamp	Coolant temperature	Machine control
Lit	Low	Engine RPM and engine load factor limited*
Out	Normal	Normal operation enabled

*: The engine RPM and engine load factor are limited to protect the engine. Upon reaching the time limit set according to the temperature at the engine start, the low coolant temperature indicator lamp goes out and the speed is gradually increased up to the RPM set by the throttle controller.

22. Deceleration indicator lamp

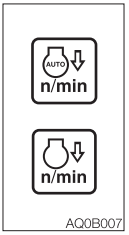

..... Automatic deceleration indicator

..... Deceleration indicator

Automatic deceleration indicator
It flashes when the automatic deceleration switch is pressed and remains lit while in the deceleration mode.
Refer to “Deceleration button” on page 2-49.
Refer to “Automatic deceleration switch” on page 2-54.

Deceleration indicator
This lamp turns on when the deceleration button is pressed. The lamp lights up to indicate that the engine is in the deceleration mode at low idling speed.

23. Glow indicator/auto greasing indicator lamp

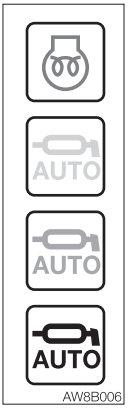

..... This indicator lamp turns off when the engine preheating is completed.

..... White: Auto greasing is enabled.

..... Green: Auto greasing is being operated.

..... Red: Greasing is disabled. Grease tank is empty or fuse is blown.
Refer to “If a warning lamp flashes” on page 6-13.

24. Highland mode indicator lamp
Highland mode is selected.
Refer to “ECO/Highland mode switch” on page 2-55.

25. Dozer blade float indicator lamp (If equipped)



..... This lamp lights up when the float switch on the blade lever is pressed.

26. ECO mode indicator lamp
This lamp lights up when the ECO mode side of the ECO/Highland mode select switch is pressed. The machine drives with reduced RPM for lower fuel consumption, without compromising workability.

27. Air conditioner indicator lamp
Lights up while the air conditioner is operating.

28. Auxiliary 1st indicator lamp

This lamp lights up to indicate which setting is selected in the auxiliary 1st. Press the auxiliary 1st key (D) to switch through the settings.

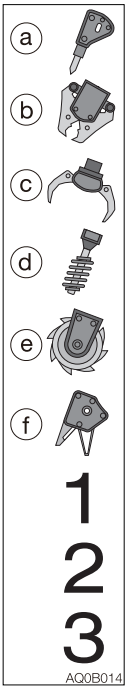

..... a Flow rate setting 1

..... b Flow rate setting 2

..... c Flow rate setting 3

..... d Flow rate setting 4

..... e Flow rate setting 5

..... f Flow rate setting 6

..... 1 Flow rate setting 7

..... 2 Flow rate setting 8

..... 3 Flow rate setting 9

Refer to “Auxiliary 1st setting” on page 2-39.

29. Auxiliary 1st one-way (one-way circuit) indicator lamp



..... Auxiliary 1st auto tank is selected.

..... Auxiliary 1st one-way is selected.

No display: ..... Two-way (two-way circuit) is selected.

30. High-flow indicator lamp

This lamp lights up when the auxiliary 1st flow rate is set to high-flow.

31. Auxiliary 2nd/4th select indicator lamp

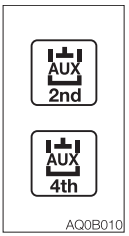

..... Auxiliary 2nd is selected.

..... Auxiliary 4th is selected.

32. Water temperature gauge
Indicates the temperature of the engine coolant water. The indicator level must be within the green range during machine operation. The red range indicates overheating.

33. Fuel gauge
Indicates the amount of fuel in the tank. Be sure to fill up the tank before running out of fuel.

34. Hydraulic oil thermometer
This instrument indicates the temperature of the hydraulic oil. The level must be within the green range during machine operation.
The red range indicates overheating.

35. DEF/AdBlue® level indicator
This meter Indicates the amount of the DEF/AdBlue® solution remaining.
Be sure to refill the tank in good time before running out of DEF/AdBlue®.

36. Hour meter/Trip meter

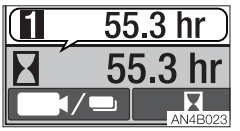

When the starter key is turned to ON, the hour meter is displayed first.
Pressing the hour meter key (B) while on the Home screen changes the meter display in the following order:
Trip meter 1, Trip meter 2, Trip meter 3, Hour meter

- **Hour meter**
  Displays the total engine running time in hours.
  The rightmost digit indicates tenths of hours (6 minutes).
  Set the inspection and maintenance intervals according to the time displayed on the hour meter.

- **Trip meter**
  Three patterns of desired operating hours can be displayed.
  Refer to “(1) Trip meter setting” on page 2-33.
  To clear the trip meter being displayed, press and hold the hour meter key (B) for three seconds.

37. Date and time indicator

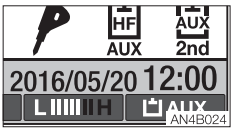

Displays the date and time set.
Refer to "(5) Date and Time setting" on page 2-36.

38. Engine load factor indicator

Engine load factor

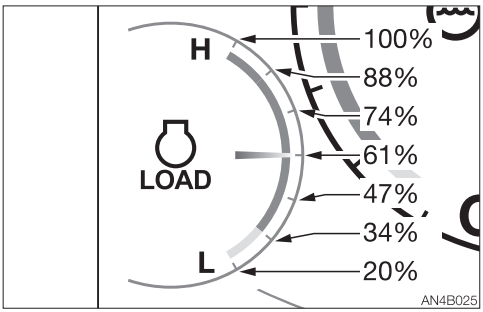

Throttle opening position

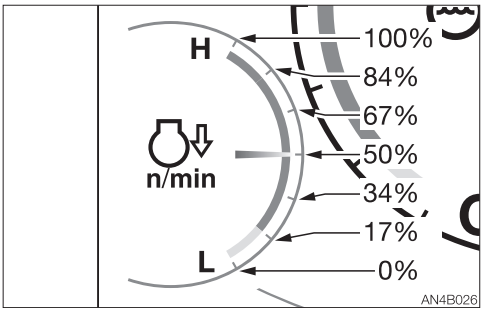

Lift load factor

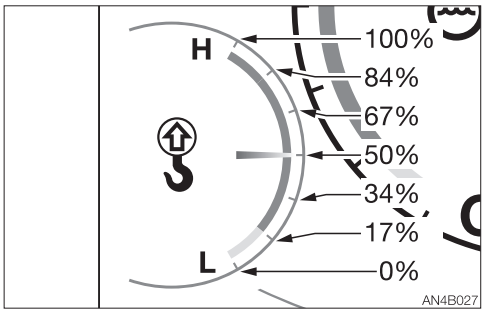

PM accumulation amount
<Applicable machine models 514700252 or later>

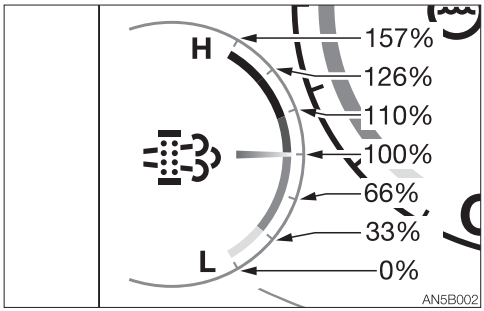

This gauge displays the load condition of the work. When the button (C) (meter key) is pressed in a normal screen, the display changes in the following order: the engine load factor, throttle opening position, lift load factor and the PM accumulation amount (only for machine models of 514700252 or later).

This gauge displays the load condition of the work. When the button (C) (meter key) is pressed on a normal screen, the display changes in the following order: the engine load factor, throttle opening position and lift load factor.

- The lift load factor is displayed if there is no change in the throttle opening position for five seconds after the lift alarm switch is turned on.

39. Swing/Second boom indicator lamp (If equipped)



..... Swing is selected.

..... Second boom is selected.

SCREEN CONTROL KEY

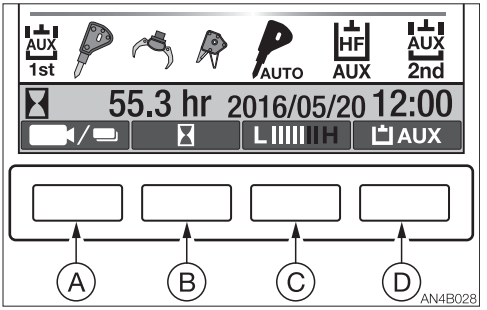

Note: Do not press the symbol keys on the display. The LCD could be damaged if the symbol keys are pressed hard. For actual operation, press the push button keys located at the bottom of the screen.

A. Camera image key/Menu key

• Camera image key (If equipped)

1. Press this key while on the Home screen to display the images taken by the camera.
2. When the camera image is displayed, press this key again to return to the Home screen.

<side view camera(If equipped)>
Press this key to switch between the Home screen and the images taken by the camera(s).
Pressing the key changes the display in the following order:

1. Images by the rear view and side view cameras
2. Images only by the rear view camera
3. Images only by the side view camera
4. Home screen

<270-degree view camera system(If equipped)>

1. Images by the 270-degree view camera
2. Home screen

• **Menu key**
Press and hold this key while on the Home or the camera image screen for one second to switch to the Menu screen. This key is also used to cancel changes made in each setting. The screen returns to the Home screen if this key is pressed while on the Menu screen.

B. Hour meter key/Down (↓) key

• **Hour meter key**
This hour meter symbol is displayed while on the Home or the camera image screen. Pressing the key changes the meter display in the following order: Trip meter 1, Trip meter 2, Trip meter 3, Hour meter
Pressing and holding this key for three seconds clears the trip meter being displayed.

• **Down (↓) key**
Use this key to scroll down the items to set on each setting screen. This key is also used to decrease the numerical value. Press and hold this key for one second to rapidly decrease the value.

C. Meter key/Up (↑) key

• **Meter key**
The meter symbol is displayed while on the Home or the camera image screen. Pressing this key while on the Home screen changes the meter display in the following order: Engine load factor, Throttle opening position, Lift load factor
Pressing the key while on the camera image screen has no effect on the screen.

• **Up (↑) key**
Use this key to scroll up the items to set on each setting screen. This key is also used to increase the numerical value. Press and hold this key for one second to rapidly increase the value.

D. Auxiliary 1st key/Enter key

• **Auxiliary 1st key**
This auxiliary 1st symbol is displayed while on the Home or the camera image screen. Pressing this key changes the symbol display in the following order: Auxiliary 1st-1 setting 1, Auxiliary 1st-2 setting, Auxiliary 1st-3 setting.

• **Enter key**
Use this key to confirm or execute the setting made by each key.

SCREEN NAVIGATION

• Menu screen

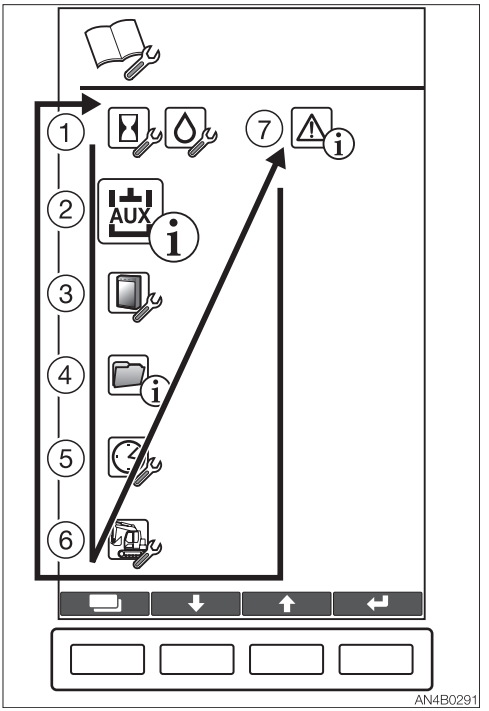

Press and hold the Menu key while on the Home or the camera image screen for one second to switch to the Menu screen.

(1) Trip meter setting
(2) Auxiliary line flow rate display
(3) LCD setting
(4) Data display
(5) Date and time setting
(6) Machine setting
(7) Error code display

Use the Up (↑) or Down (↓) key to go to the desired item to set, and then press the Enter key to confirm. (The selected item is displayed enlarged.) Press the Menu key to return to the Menu screen.
The wrench symbol indicates that “the setting can be edited” and the (i) mark indicates information only.

(1) TRIP METER SETTING

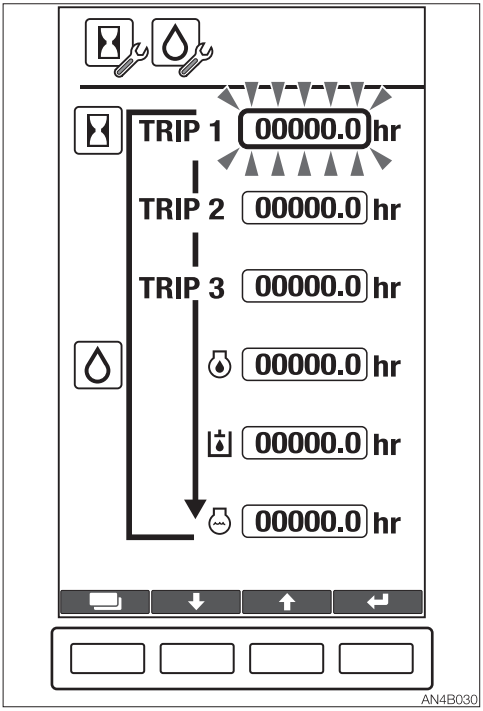

Six patterns of desired operating hours can be set.
Use the Up (↑) or Down (↓) key to scroll up or down the list of fields. The numerical value inside the selected field flashes. Pressing and holding the Enter key for three seconds clears the flashing values.
Press the Menu key to go the Menu screen.

(2) AUXILIARY LINE FLOW RATE DISPLAY

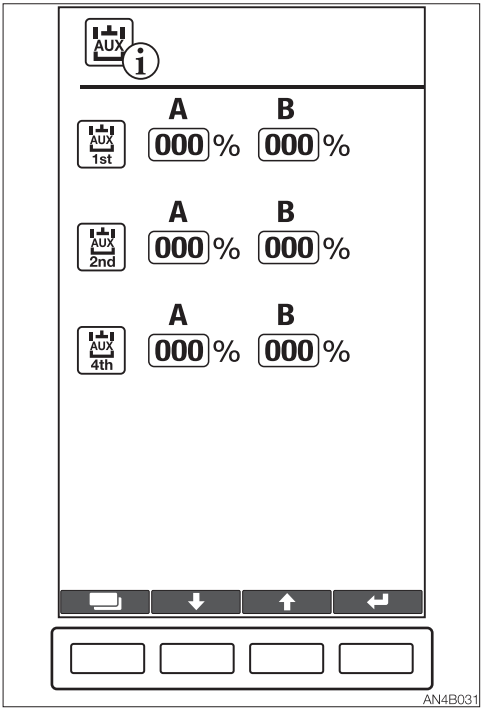

Displays the flow rate of the Auxiliary 1st, 2nd and 4th.
The flow rate cannot be changed.
Press the Menu key to go the Menu screen.

(3) LCD SETTING

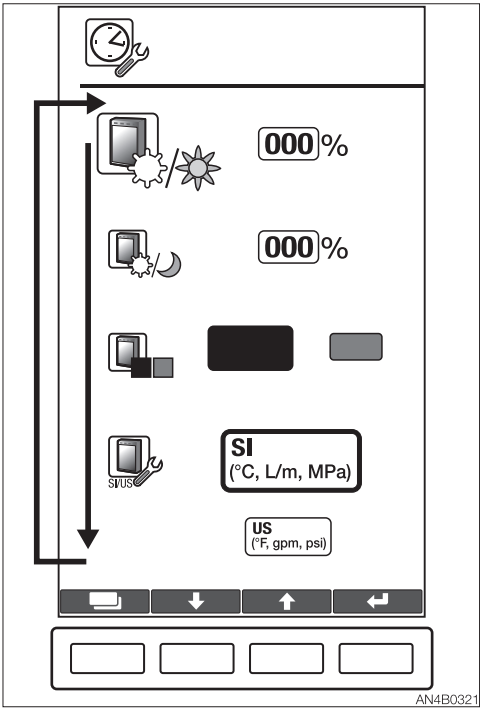

The display setting can be changed. Use the Up (↑) or Down (↓) key to go to the desired item to set, and then press the Enter key to confirm. (The selected item is displayed enlarged.) Press the Menu key to go the Menu screen.

• **Brightness setting**

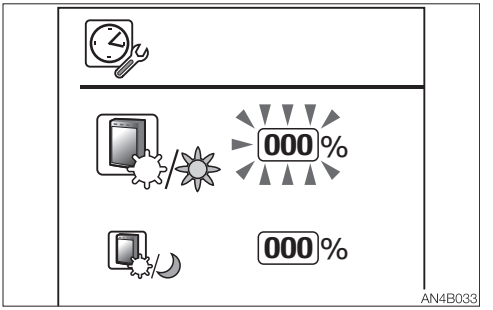

The brightness of the LCD is set to between 1 and 100%.
The brightness changes each time the adjustment is made.
Select the brightness setting symbol and press the Enter key. The numerical value starts flashing to indicate that editing is available. To cancel editing during the process, press the Menu key.
Use the Up (↑) or Down (↓) key to change the value, and then press the Enter key to complete editing.
Adjustment to the night (day) mode while in the day (night) mode cannot be synchronized.

• **Background color setting**

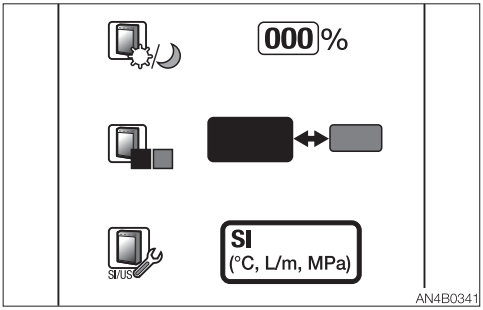

Select the background color symbol and press the Enter key. The current background color starts flashing. Use the Up (↑) or Down (↓) key to select the desired color, and then press the Enter key to confirm. The flashing stops to indicate that the setting is completed.

• **Unit setting**

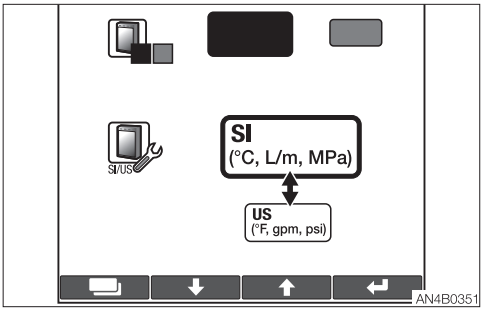

Select the unit symbol and press the Enter key. The current unit starts flashing. Use the Up (↑) or Down (↓) key to select the desired unit, and then press the Enter key to confirm. The flashing stops to indicate that the setting is completed.

(4) DATA DISPLAY

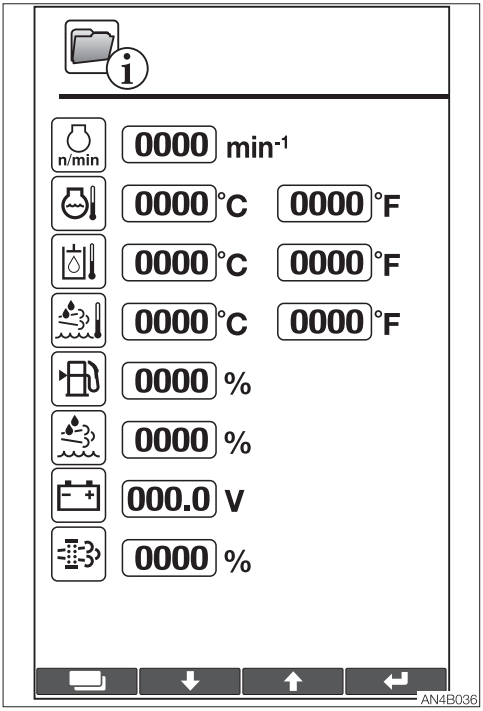

Displays various data. The setting cannot be changed.

Display items
- Engine RPM
- Coolant temperature
- Hydraulic oil temperature
- DEF/AdBlue® temperature
- Fuel level
- DEF/AdBlue® level
- Battery voltage
- PM accumulation amount

Note: For the data item not applicable to this machine, N/A is displayed.

(5) DATE AND TIME SETTING

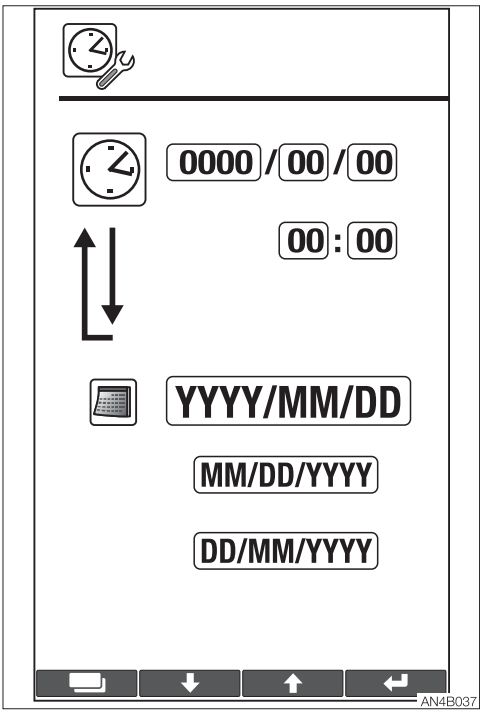

The year, month, date, hour and minute can be set. (Effective year range: 2010 to 2099)
Use the Up (↑) or Down (↓) key to go to the desired item to set, and then press the Enter key to confirm. (The selected item is displayed enlarged.) Press the Menu key to go the Menu screen.

• Date/Time setting

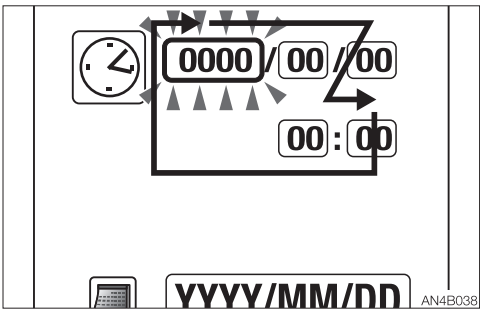

Select the date or time setting symbol, and then press the Enter key to display the fields.
Use the Up (↑) or Down (↓) key to go to the field of the desired item to set, and then press the Enter key to confirm. The numerical values are flashing while editing.
For the key operations, refer to “Screen control key” on page 2-30.

• Date/Time display format

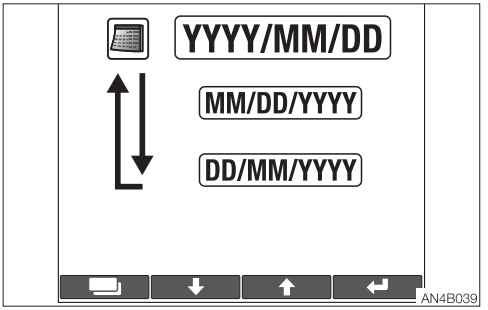

Select the calendar symbol and press the Enter key. The display formats of “Year/Month/Date”, “Month/Date/Year” and “Date/Month/Year” start flashing. Use the Up (↑) or Down (↓) key to select the desired display format, and then press the Enter key to confirm. The flashing stops to indicate that the setting is completed.

(6) MACHINE SETTING

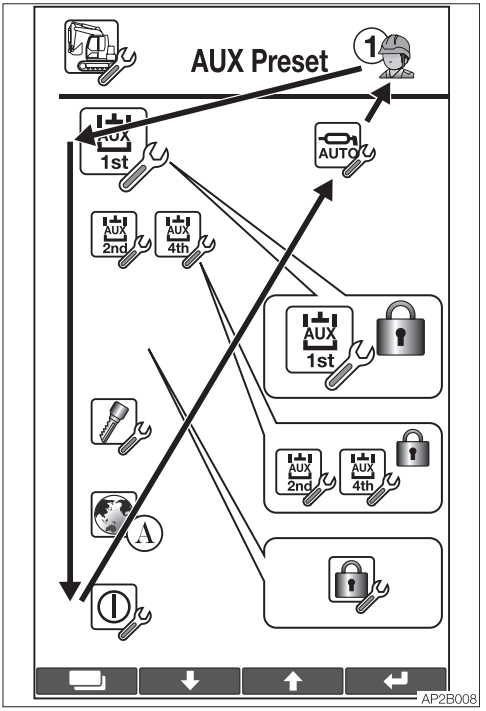

The settings made to the machine can be changed.
Use the Up (↑) or Down (↓) key to go to the desired item to set, and then press the Enter key to confirm. (The item selected is displayed enlarged.)
Press the Menu key to go the Menu screen.
Note: When the auxiliary flow rate locking is set to enabled, the lock symbol is added to the upper right of the “auxiliary flow rate” symbol.
You are requested to enter the password when setting the auxiliary flow rate, locking/unlocking the auxiliary flow rate or changing the password.
Note: When the auxiliary flow rate locking is set to disabled, the lock symbol is not displayed.

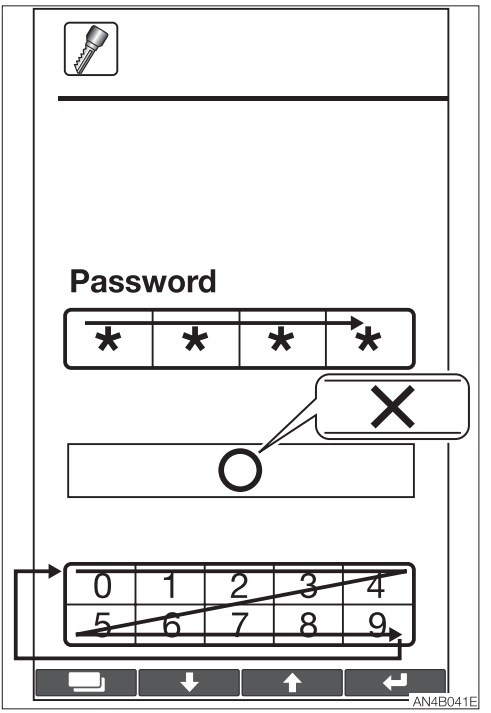

When the password setting is set to enabled, you are requested to enter the password when setting the auxiliary line, locking/unlocking the auxiliary or changing the password. Use the Up (↑) or Down (↓) key to go to the desired item to set, and then press the Enter key to enter a 4-digit number password. (The selected item is flashing.)
Enter the current password. If it is correct, the setting screen appears. If it is not, a cross (X) is displayed.
It is not necessary to enter the password again unless you want to change it or until you turn the starter switch to OFF.

Auxiliary 1st setting

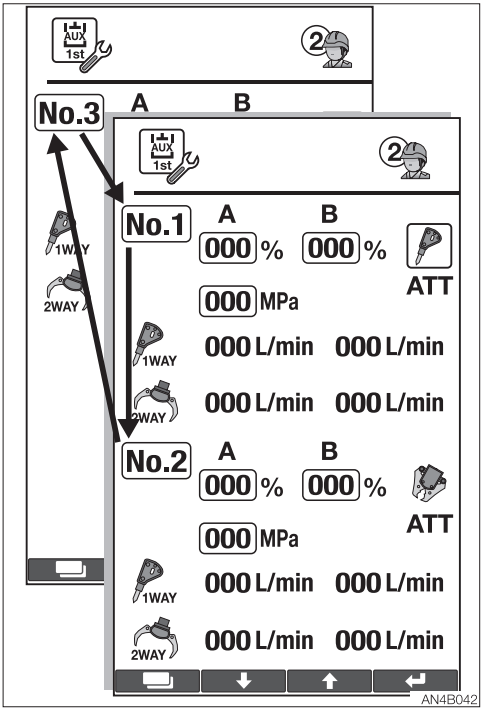

For the flow rate and pressure in the auxiliary 1st, three setting patterns can be made. The three patterns set are shown in the Home screen to choose from. To return to the machine setting screen, press the Menu key.

Note: Changing the preset pressure is an optional function, and so it may not be available depending on the machine used. If the function is not available, the pressure is displayed as “N/A”.

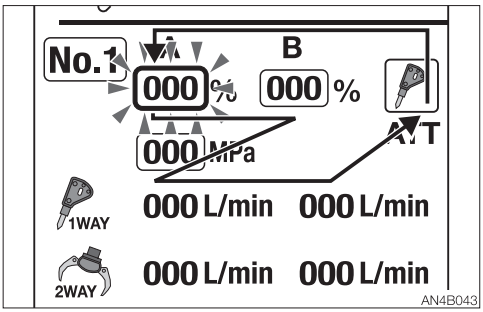

Select the number to set, and then press the Enter key to display the fields.
Use the Up (↑) or Down (↓) key to go to the field of the desired item to set, and then press the Enter key to confirm. The numerical values are flashing while editing.
For the key operations, refer to “Screen control key” on page 2-30.

Initial condition	Standard flow	Variable range
No.1	100%=112L/min (29.6 US gpm)	10 to 100%
No.2	75%=84 L/min (22.2 US gpm)	10 to 100%
No.3	50%=56L/min (14.8 US gpm)	10 to 100%

Maximum flow rate	High-flow	Variable range
No.1 to 3	200%=224L/min (59.2 US gpm)	101 to 200%

The table shows the 1-way flow rate when there is no load.
Note: The 1-way flow can be performed only when the switch (A) is used.

Initial condition	A/B common, standard pressure	Variable range
No.1 to 3	25 MPa	0 MPa to 25 MPa (0 psi to 3625 psi)

The pressure can be set in increments of 2 MPa.
Note: Depending on the value set or hydraulic oil temperature, vibration could occur in the piping; this is not a malfunction.

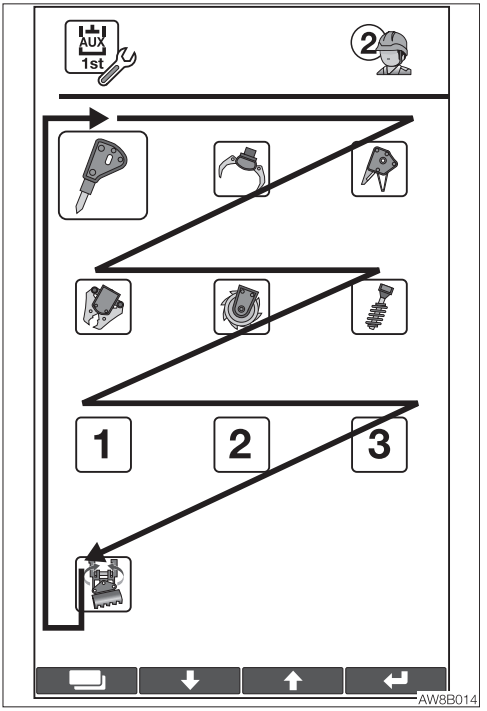

Pressing the Enter key while the field is at "ATT" goes to the attachment select screen. Use the Up (↑) or Down (↓) key to go to the desired item to set, and then press the Enter key to confirm. (The selected item is displayed enlarged.) Press the Menu key to go to the auxiliary 1st setting screen.

Note:

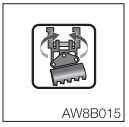

..... Tiltrotator symbol
(If equipped)

The flow rates A and B are set to 100% when this symbol is selected.

Auxiliary 2nd/4th setting

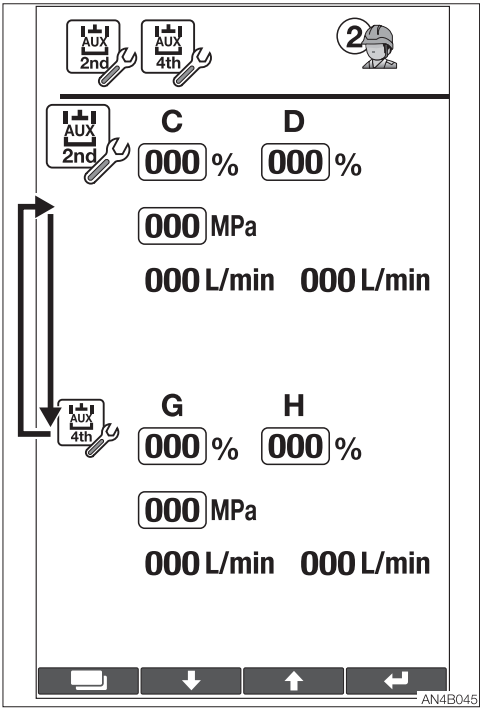

For the flow rate and pressure in the auxiliary 2nd/4th, one setting pattern can be made. To return to the machine setting screen, press the Menu key.

Note: Changing the preset pressure is an optional function, and so it may not be available depending on the machine used. If the function is not available, the pressure is displayed as "N/A".

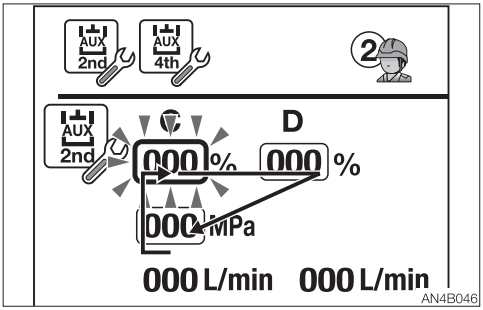

Select the circuit to set, and then press the Enter key to display the fields.
Use the Up (↑) or Down (↓) key to go to the desired item to set, and then press the Enter key to confirm. The numerical values are flashing while editing.
For the key operations, refer to “Screen control key” on page 2-30

Initial condition	C/D, G/H common, standard flow	Variable range
Auxiliary 2nd	C/D 100%=55L/min (14.5 US gpm)	10 to 100%
Auxiliary 4th	G/H 100% = 55L/min (14.5 US gpm)	10 to 100%

Initial condition	C/D, G/H common, standard pressure	Variable range
Auxiliary 2nd	23 MPa	0 MPa to 23 MPa (0 psi to 3335 psi)
Auxiliary 4th		

The pressure can be set in increments of 2 MPa.
Note: Depending on the value set or hydraulic oil temperature, vibration could occur in the piping; this is not a malfunction.

Auxiliary lock setting

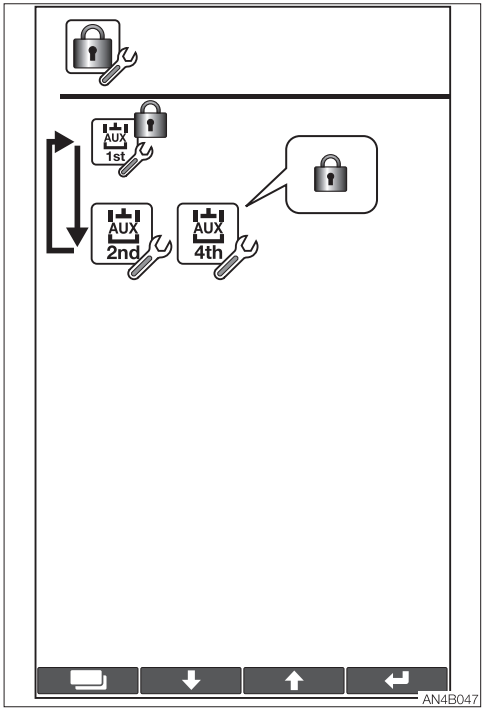

A password can be set as compulsory when the auxiliary setting is made.
To return to the machine setting screen, press the Menu key.
Use the Up (↑) or Down (↓) key to go to the desired item to set, and then press the Enter key to turn on or off the lock symbol. (The selected item is displayed enlarged.)
Lock symbol is lit: Locked (enabled)
Lock symbol is off: Unlocked (disabled)

Password setting

Note: In case you forget the password, contact your sales dealer.

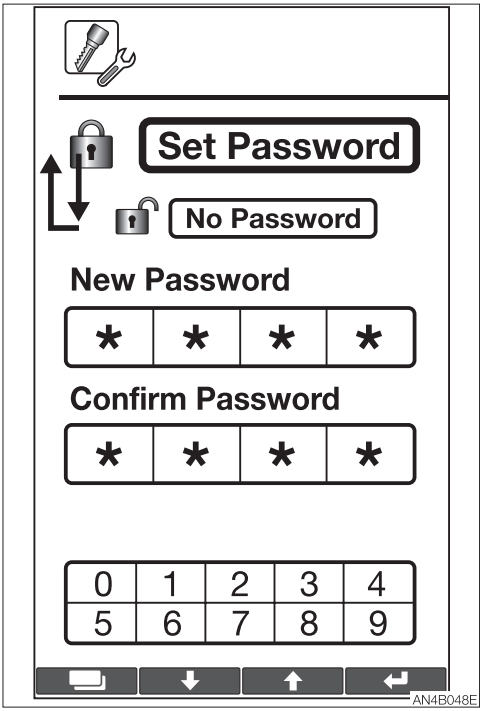

The password can be set. To return to the machine setting screen, press the Menu key.

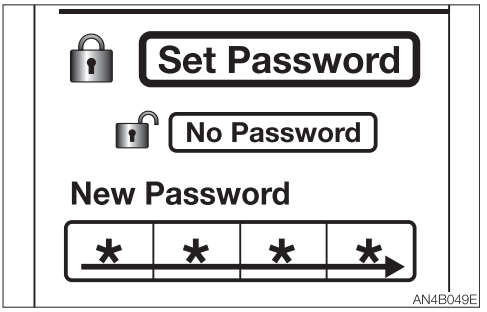

Select “Set Password” and press the Enter key to enter a 4-digit number password in the “New Password” field.

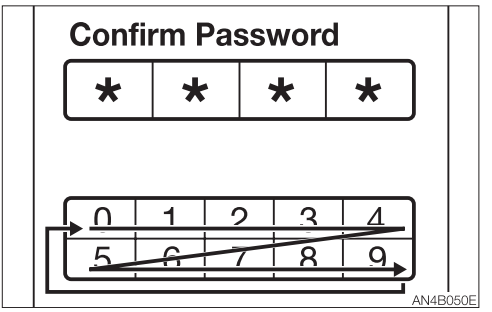

Use the Up (↑) or Down (↓) key to select the item, and then press the Enter key to enter a 4-digit number password. (The selected item is flashing.)

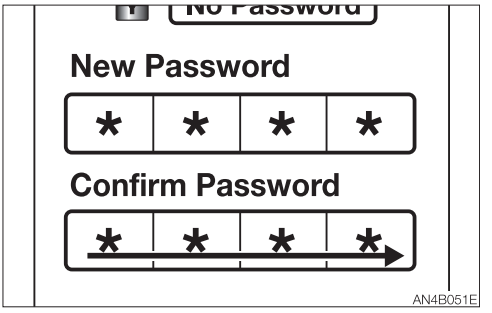

Enter a password in “New Password”, and then enter the same password in “Confirm Password”.

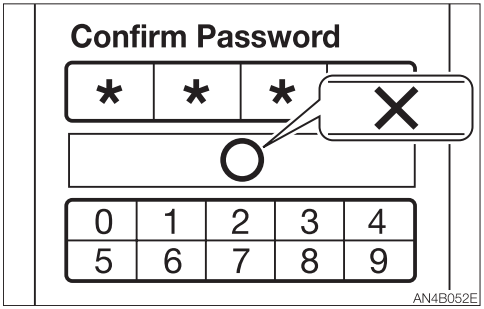

If the two passwords are identical, a circle (O) is displayed to indicate that the setting is enabled. Press any of the buttons to return to the machine setting screen.
If a cross (X) is displayed, enter the password in “Confirm Password” again. Press the Menu key to cancel the setting.

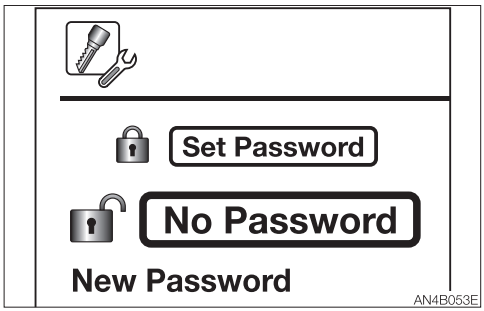

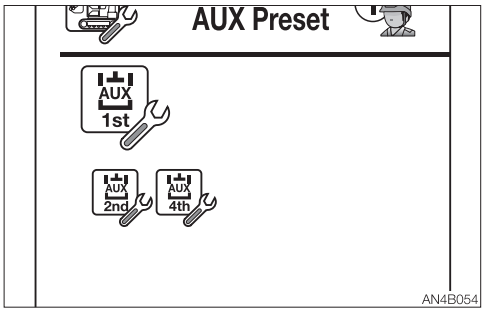

Selecting “No Password” and pressing the Enter key disables the password setting. When the password setting is cancelled, the lock symbol is not displayed on the machine setting screen.

Language selection

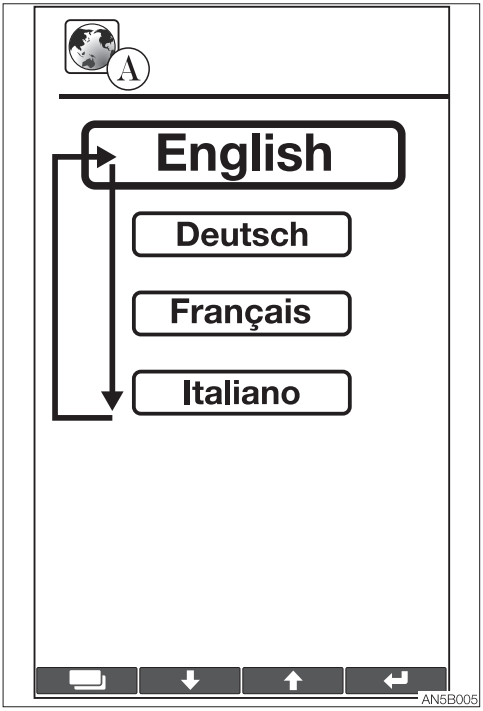

The language used can be selected. Use the Up (↑) or Down (↓) key to go to the desired language to set, and then press the Enter key to confirm. (The selected language is displayed enlarged.) Press the Menu key to go the machine setting screen.

ON/OFF setting

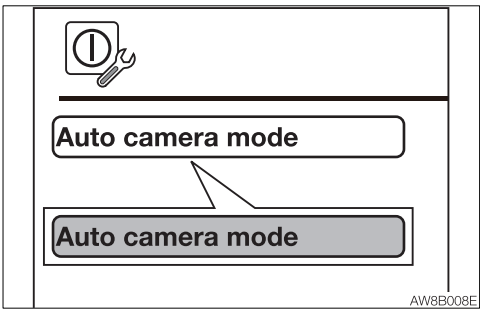

The auto camera mode can be set to ON or OFF.
Pressing the Menu key returns to the Machine Setting screen.
Pressing the Enter key changes the background.
White background: ON
Gray background: OFF

Auto greasing setting

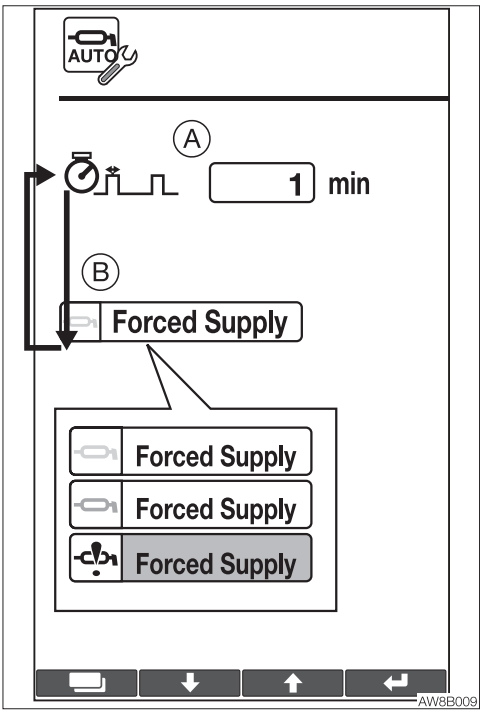

Use the Up (↑) or Down (↓) key to select the item to set, and then press the Enter key to start editing.

Item “A”: Set the auto greasing time. The numerical value flashes while setting.
UP (↑) key: Increases the value. Press and hold the key for one second to rapidly increase the value.
Down (↓) key: Decreases the value. Press and hold the key for one second to rapidly decrease the value.
Enter key: Confirms edited item.
Menu key: Cancels edited item or returns to the Menu screen.

Item “B”: Displays the greasing condition.

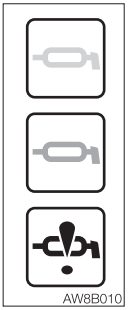

..... White: Grease pump is stopped. Press the Enter key to start greasing.

..... Green: Grease pump is operating. Press the Enter key to stop greasing.

..... Red: Greasing is disabled. Grease tank is empty or fuse is blown.
Refer to “If a warning lamp flashes” on page 6-13.

Preset patterns

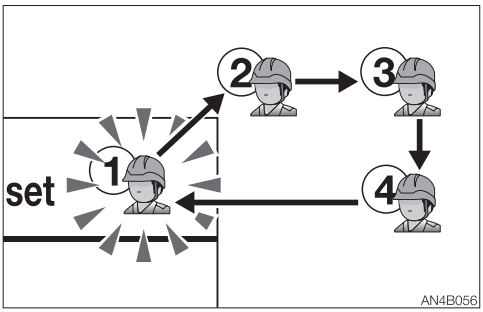

Four setting patterns can be made in the auxiliary 1st and 2nd/4th.
While on the machine setting screen, select the face symbol on the upper right, and then press the Enter key. The symbol starts flashing. Use the Up (↑) or Down (↓) key to select the desired setting, and then press the Enter key to confirm.

(7) ERROR CODE DISPLAY

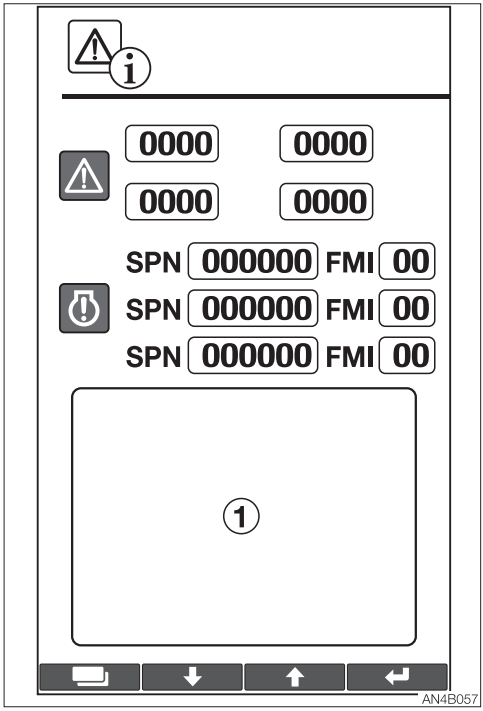

⚠.....Vehicle error code
Displays four error codes, with the latest code in the upper left.
Refer to “Vehicle error code list” on pages 6-16 to 6-17.

.....ECM error code
Engine ECM (Engine Control Module) error code
Displays three error codes, with the latest code at the top.
Refer to “Engine error code list” on pages 6-18 to 6-33.

On the description screen (1), description of each error code is displayed.
If multiple error codes are given, use the UP (↑) or Down (↓) key to switch through them.

IMPORTANT: If an error code appears, immediately stop the operation and contact a Takeuchi sales or service outlet for help.

SWITCHING IMAGES

- Changing the background color (day/night)

Day

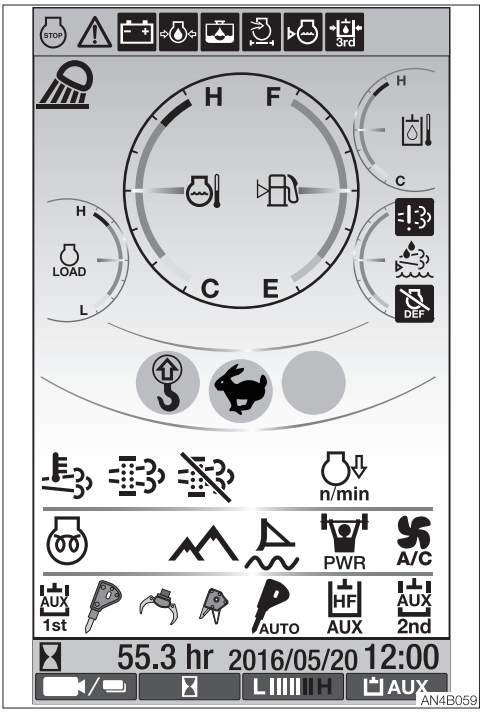

Night



Turn on the light switch on any screen to decrease the display brightness and to enter the night mode.

Camera image

⚠ WARNING

Do not look at the images produced by the camera when traveling in reverse. Move in reverse while visually looking at the direction of travel.

Press the Camera image key in the Home screen to display the images taken by the rear camera.
<side view camera(If equipped)>
Press the Camera image key on the Home screen to display the images taken by the rear view and side view cameras.

<270-degree view camera system(If equipped)>
Press the Camera image key on the Home screen to display the images taken by the 270-degree view camera.

Images by the rear view and side view cameras(If equipped)

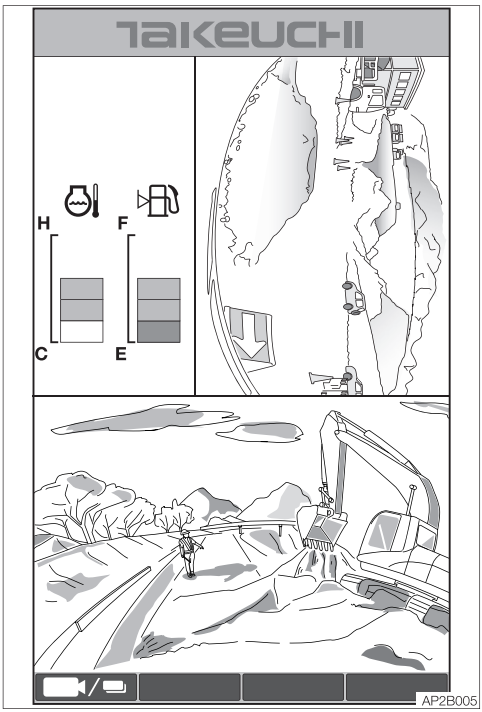

Pressing the Camera image key switches to the images taken by the rear view camera.

Images by the rear view camera

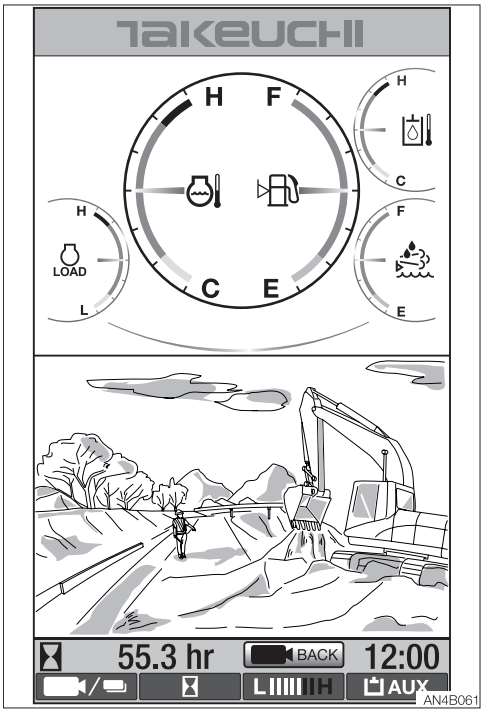

When the camera image is displayed, press the Camera image key again to return to the Home screen.
<side view camera(If equipped)>
Pressing the Camera image key switches to the images taken by the side view camera.

Images by the side view camera(If equipped)

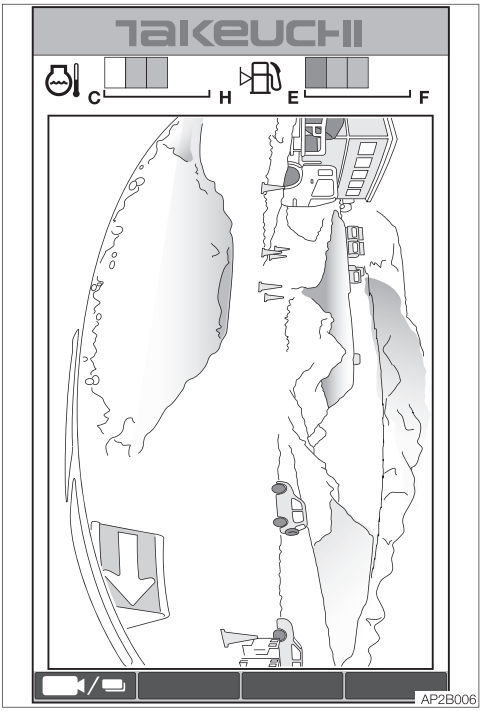

Pressing the Camera image key switches to the Home screen.

Images by the 270-degree view camera system (If equipped)

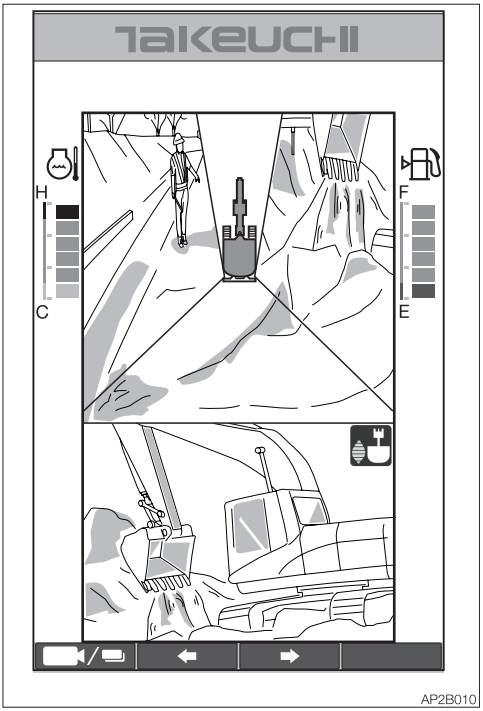

A. Camera image key
B. Left (←) key
C. Right (→) key

1. Press the Camera image key on the Home screen to display the images from the 3 different view points taken by the 3 cameras.
2. Press the Left (←) or Right (→) key to display the image taken by the camera as follows:
   Left (←) key……From Above + Rear → From Above + Left → From Above + Right → From Rear + Right → From 3 cameras → From Above + Rear
   Right (→) key……From Above + Rear → From 3 cameras → From Rear + Right → From Above + Right → From Above + Left → From Above + Rear
3. Press the Camera image key again to return to the Home screen.

SWITCHES

STARTER SWITCH

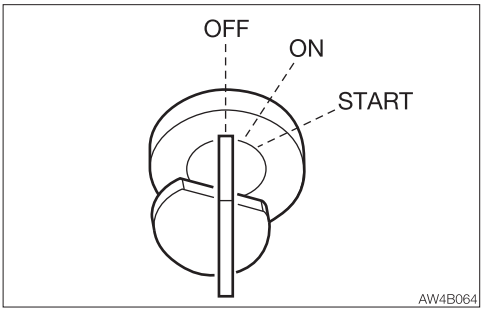

IMPORTANT: Do not repeatedly switch the key from OFF to ON and ON to OFF over a short period. Doing so will cause engine breakdown.

OFF ..... Position for stopping the engine and inserting or removing the key.
ON ..... Position in which the engine is running. At this position, all the electrical equipment is functional. When the coolant temperature is too low, the engine is automatically preheated.
START ..... Position for starting the engine. When the key is released, the switch automatically returns to the ON position.

ENGINE SHUTDOWN SWITCH

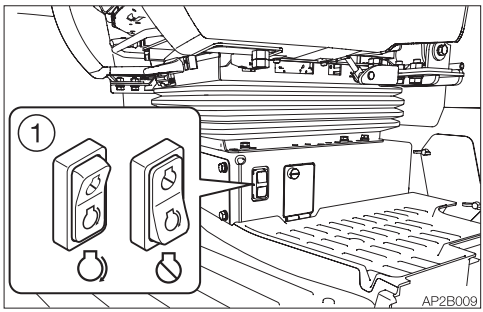

This switch is used to shutdown the engine if it fails to stop, due to machine failure or breakage, when the starter switch is set to the OFF position.
1. Press the switch (1).
2. After use, reset the switch (1).

THROTTLE CONTROLLER

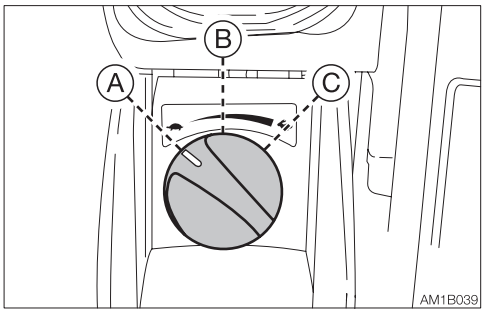

This controls the engine speed.
(A).....Low idling
(B) .....Medium speed
(C) .....Maximum speed

HORN BUTTON

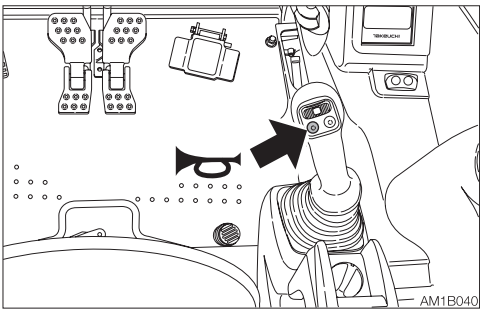

Press the button situated on the right operating lever to blow the horn.

DECELERATION BUTTON

⚠ WARNING

Before operating the deceleration button, set the operating lever to the neutral position and take your foot off the pedals. If the deceleration button is pressed while driving, the machine's operating speed will abruptly change to result in a dangerous situation.

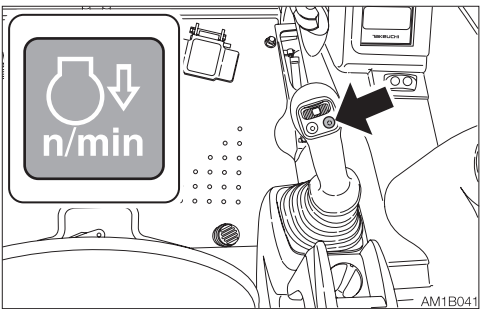

Press this button on the right operating lever to lower the engine speed to low idling. Press the button again to return to the engine speed set with the throttle controller. For safety reasons, it is designed that the deceleration function is activated to set the engine revolutions to low idling whenever the engine is started.
Cancel the deceleration mode by pressing the deceleration button as necessary.

Note: This deceleration button is capable of decreasing the engine speed and reducing the fuel consumption, with a simple operation, in a situation such as when little engine output is required and thus the operating or the travel levers are in neutral.

TRAVEL SPEED BUTTON

⚠ WARNING

When a load greater than a set value is applied during traveling in 2nd (high) speed, the speed will automatically slow down to 1st (low) speed. When the load becomes lighter, the speed will increase and return to 2nd (high) speed. It should be noted that the travel speed changes depending on the load condition (for machines with the automatic travel shift-down system).

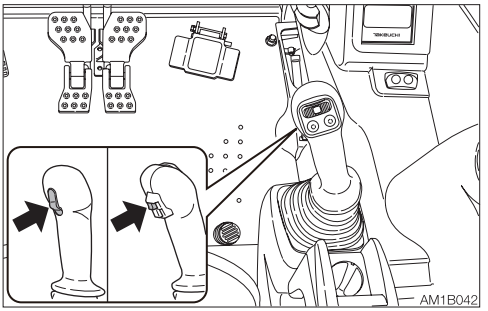

Press this switch to set the travel speed to 2nd (high) speed. Press it again to return to 1st (low) speed.

AUXILIARY 1ST SWITCHES

Auxiliary hydraulic buttons

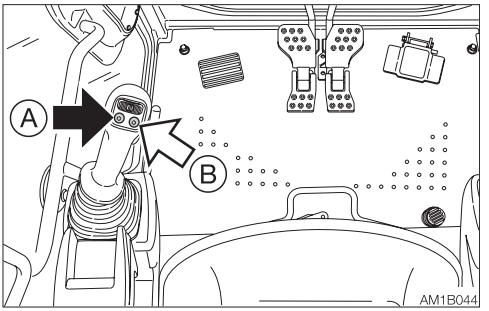

Press those buttons to control the flow of the oil in the first auxiliary hydraulic lines.

- Proportional control of the auxiliary hydraulic circuit is not possible.

(A).....Hydraulic oil flows to the left auxiliary line (a).

(B) .....Hydraulic oil flows to the right auxiliary line (b).

Slider switch (Proportional control)

Proportional control allows for slow-to-fast/ fast-to-slow movement of attachment. Example: If you move the slider switch half way, the attachment will move at approximately one-half the speed.

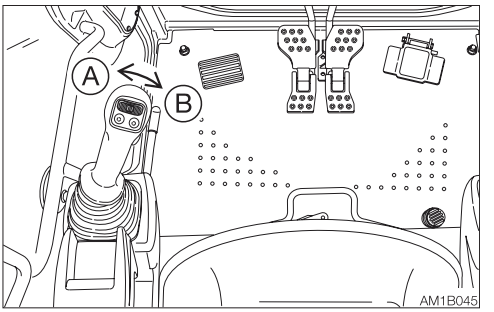

Move this switch to control the flow of the oil in the first auxiliary hydraulic lines.

(A).....Hydraulic oil flows to the left auxiliary line (a).

(B) .....Hydraulic oil flows to the right auxiliary line (b).

Refer to “Auxiliary hydraulic lines” on pages 2-100 to 2-105.

AUXILIARY 2ND/4TH SWITCH

Slider switch
(Proportional control)
Proportional control allows for slow-to-fast/ fast-to-slow movement of attachment.
Example: If you move the slider switch half way, the attachment will move at approximately one-half the speed.

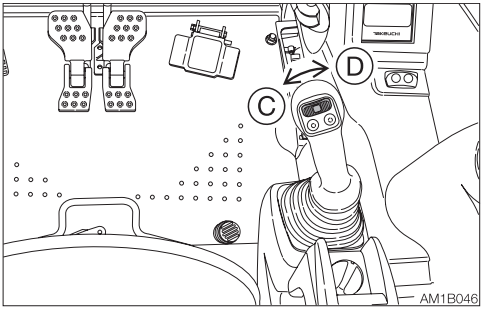

Move this switch to control the flow of the oil in the second auxiliary hydraulic lines.
(C): .....Hydraulic oil flows to the left auxiliary line (c).
(D): .....Hydraulic oil flows to the right auxiliary line (d).

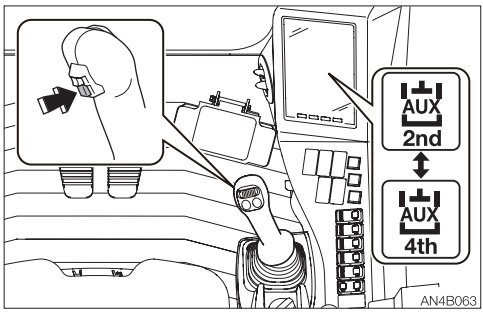

To use the auxiliary 4th hydraulic line, press the auxiliary 2/4 select button to change to the operation of the auxiliary 4th.
Refer to “Auxiliary hydraulic lines” on pages 2-100 to 2-105.

THIRD AUXILIARY HYDRAULIC SWITCH AND BUTTON

Refer to “Third auxiliary hydraulic switch and button” on page 2-103.

AUXILIARY 2/4 SELECT BUTTON

Refer to “Auxiliary 2/4 select button” on 2-105.

THIRD AUXILIARY HARD-LOCK SWITCH (IF EQUIPPED)

Refer to “Third auxiliary hard-lock switch (If equipped)” on page 2-104.

WIPER SWITCH

IMPORTANT: If no washer fluid is discharged, do not operate the washer. Doing so may damage the pump.
IMPORTANT: Operating the wiper with no moisture on the windshield will scratch the glass. Use water or washer fluid when operating the wiper.
IMPORTANT: In cold climates, the wiper blade may freeze to the glass. Operating the wiper forcibly may damage the wiper motor.

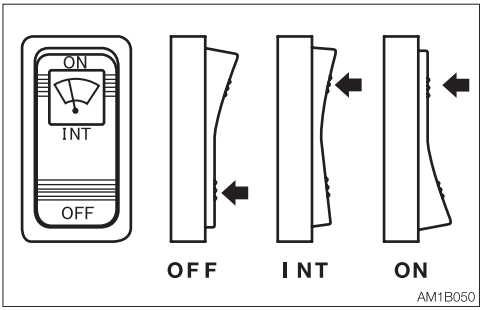

OFF ....Off
INT .....Intermittence operation
ON .....Continuous operation

WASHER SWITCH

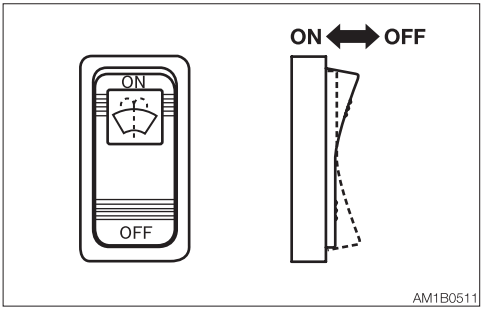

ON .....Pressing the ON side of the switch causes the washer to spray washer fluid. To stop spraying, release the switch.

AUTOMATIC DECELERATION SWITCH

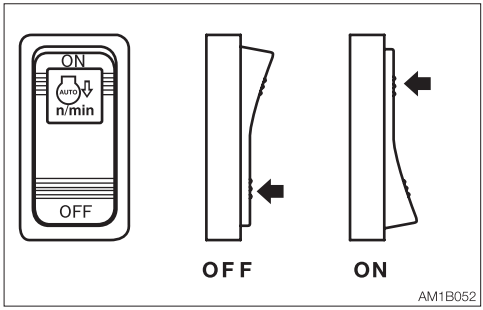

When the ON side of the switch is pressed, the deceleration lamp in the multi-information display flashes. This flashing stops when the deceleration function starts working, and the lamp remains lit while in the deceleration mode. The engine speed automatically drops to low idle (deceleration mode) four seconds after the control levers are set to neutral, to reduce fuel consumption. Moving the control levers will cause the speed to return to the original engine speed.
Switching from the deceleration button to the auto-deceleration switch will first return to the engine speed set with the throttle controller. Then, the engine will automatically enter the deceleration mode (low idling) if the control levers are not operated within four seconds.

ECO/HIGHLAND MODE SWITCH

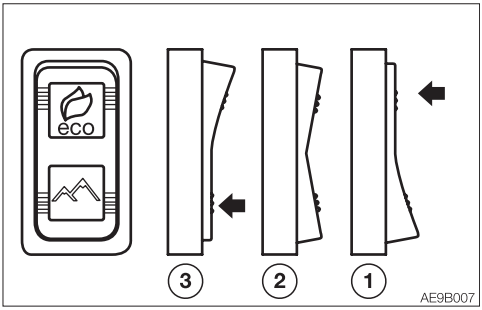

(1) ECO mode
Pressing the ECO symbol side of the switch turns on the ECO mode indicator lamp on the multi-information display.
The engine RPM and hydraulic horse power are set to economically optimal values to improve the fuel economy.
Refer to “26. ECO mode indicator lamp” on 2-26

(2) STD mode
Setting the switch to the neutral position turns off the ECO mode indicator lamp.

(3) Highland mode
This switch is used to reduce the engine load due to the hydraulic pump. When the machine is operated at a high-altitude site, the engine output is decreased due to thin air. In such cases, the hydraulic horse power is automatically adjusted to prevent the engine from stalling. Use this switch when the machine is operated at a high-altitude site.

- Pressing the highland mode symbol side of the switch lights up the highland mode indicator lamp in the multi-information display.
- To cancel the highland mode, press the ECO symbol side halfway to set to the neutral position. The highland mode indicator lamp goes out and enters the lowland mode.
Refer to “Multi-information display” on page 2-20.

DETENT MODE SWITCH (AUXILIARY 1ST)

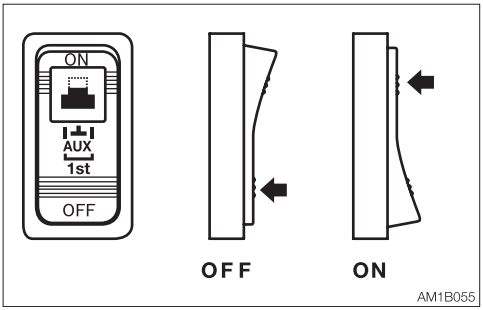

IMPORTANT: Do not operate the machine in the detent mode for a long time. Doing so will increase the hydraulic oil temperature and shorten the service life of the hydraulic units.

This switch is used to change the operation mode of the auxiliary 1st button (A). Pressing the ON side of the switch causes the auxiliary button (A) to enter the detent mode. Pressing the OFF side changes to the momentary mode.

LIGHT SWITCH

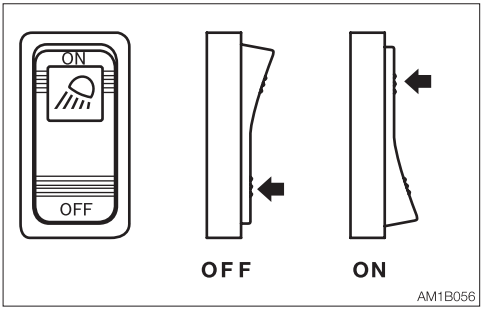

When this switch is turned while the starter switch is at ON, the lights turn on as follows:
OFF ....Off
ON .....Switch lamps, front light, boom light, side lights and tail lamps will be lit. (switch lamp is lit)

LIFT OVERLOAD WARNING SWITCH

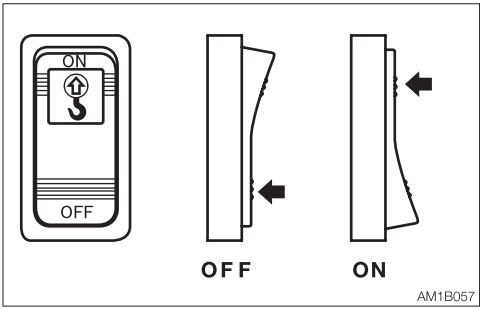

⚠ WARNING

If the overload is not removed after the overload warning horn is sounded, the machine may tip over or the emergency shut-off valve may be activated. If the horn starts sounding, stop operating the machine and lighten the load.

If a weight greater than the lifting capacity is applied or lifted, the overload warning device is activated and the horn sounds. (When the lift overload warning switch is turned on.)
OFF ....Off
ON .....On

BEACON LAMP SWITCH

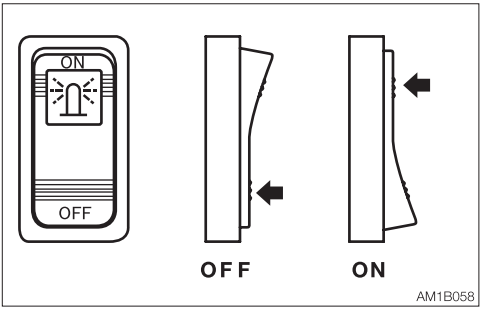

When this switch is turned on while the starter switch is at ON, the lamp turns on as follows:
OFF ....Off
ON .....Beacon lamp is lit

AUXILIARY 1ST AUTO TANK SWITCH (OPTION)

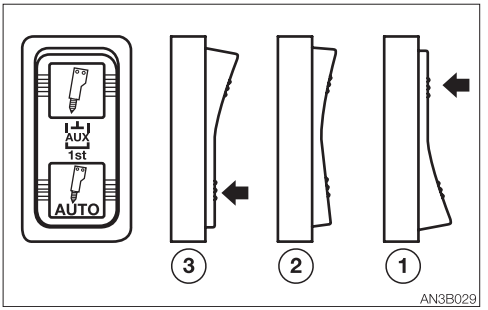

Use this switch to change the direction of hydraulic oil flow in the Aux. 1st line.
(1).....When using a hydraulic breaker (1-way flow)
(2).....When using a reversible attachment (2-way flow)
(3).....The one-way flow can be set only when the button “A” of the Aux. 1 is pressed.

Note: Use the high-flow only in the 2-way flow. If it is used in the one-way flow, the brake may overheat.

STANDSTILL REGENERATION/STOP SWITCH

⚠ WARNING

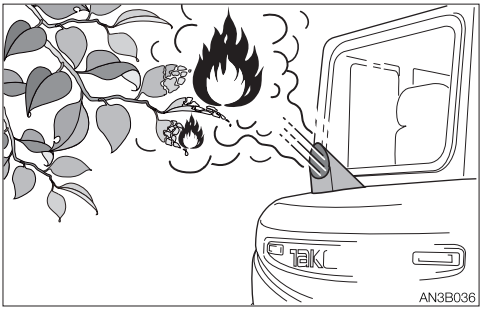

- **The exhaust gas emitted from the exhaust line is very hot while the engine is running or the regeneration is in process. Be careful not to accidentally touch it. Doing so could cause burns.**
- **Do not perform the standstill regeneration if the machine is surrounded by flammable items such as plants, trees, dry grass, wastepaper, oil and waste tires. There is a risk of fire due to high-temperature exhaust gas emitted.**
- **Do not perform the DPF regeneration in poorly-ventilated indoor spaces, as smoke could be generated during the DPF regeneration or carbon monoxide poisoning could result.**
- **Do not run the standstill regeneration when the engine hood is open. There is a risk of fire in the machine due to high-temperature exhaust gas emitted.**

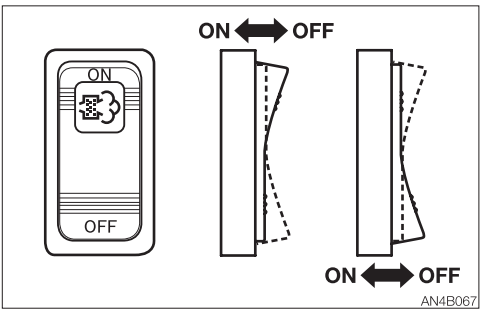

ON .....Performing
OFF ....Stopping

IMPORTANT: When the Standstill regeneration in process/demand indicator lamp starts flashing and the alarm starts sounding, perform the standstill regeneration. If the machine continues to operate without performing the standstill regeneration, the engine output is limited. The ECM error warning indicator lamp also flashes to indicate that the engine needs to be repaired. A number appears on the engine error code screen. Refer to the "Engine error code list" and contact a Takeuchi sales or service dealer for repair.

The time interval between the two regeneration requests is shortened in proportion to the number of regenerations performed.
Very short intervals between the two requests for standstill regeneration can be an indication of a defect. In this case, ask your sales or service dealer for help.

- **Performing the standstill regeneration**
  When the Standstill regeneration in process/demand indicator lamp starts flashing on the multi-information display and the alarm starts sounding, perform the standstill regeneration as follows.
  1. Park the machine in a safe place where there is no fire hazard.
  2. Raise the safety lock lever to the lock position.
     · Do not lower the safety lock lever and move the control levers during regeneration. Doing so interrupts the

regeneration.

3. Decrease the engine speed to low idling.
4. Press and hold the perform side on the Standstill regeneration/stop switch.
5. The Standstill regeneration in process/ demand indicator lamp changes from flashing to solid, indicating that the engine RPM is automatically increased and the standstill regeneration is started.
6. Release the switch. Do not leave the machine during regeneration.
   It takes approximately 35 to 40 minutes to complete the regeneration.
7. The regeneration symbol goes off to indicate the end of regeneration.

Notes:

- Do not lower the safety lock lever and move the control levers during regeneration. Doing so interrupts the regeneration.
- The standstill regeneration does not start unless the coolant temperature reaches at least 75°C (167°F).
- Every standstill regeneration slightly dilutes the engine oil with fuel. The number of standstill regenerations is therefore monitored.

- **Stopping the standstill regeneration**
  To cancel the standstill regeneration, press the stop side of the switch.
  The stop symbol appears on the display. In this case, regeneration must be performed again. Start the standstill regeneration procedure again from the step (1) above, as soon as possible. Do not press the stop side of the switch unless there is a risk of fire.
  Refer to “16. Standstill regeneration in process/Demand indicator lamp/Ash lamp <Applicable machine models 514700252 or later>” on page 2-24 and “21. DPF auto regeneration/Standstill regeneration stop indicator lamp/low coolant temperature indicator lamp” on page 2-25.

LEVERS AND PEDALS

SAFETY LOCK LEVER

⚠ WARNING

- **Before standing up from the operator's seat to open/close the window or remove/install the lower window, lower the working equipment to the ground, raise the safety lock lever to engage the lock and stop the engine. If any controls should be accidentally touched when the safety lock lever is lowered (unlocked), the machine will suddenly move and cause serious injury or death.**
- **Be careful not to touch the operating levers when raising or lowering the safety lock lever.**
- **Before leaving the operator's seat, lower the working equipment to the ground, raise the safety lock lever to engage the lock and stop the engine. Also, be sure to remove the key, lock the door and covers, take it with you and store it in a specified place.**

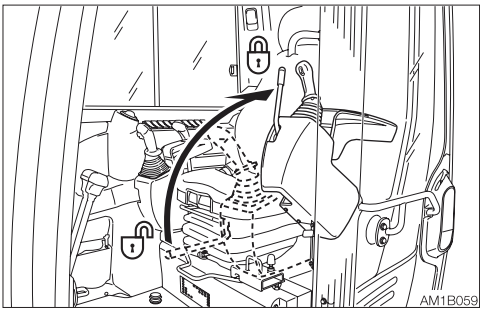

This device is for locking the operations of hoe attachment, slewing, auxiliary, dozer blade and traveling.
When the lever is raised, the lever stand springs up to lock the lever.
When the lever is in the unlock position, the engine cannot be started.

OPERATING LEVERS

⚠ WARNING

- **Before starting operation, carefully check which lever pattern you are going to use.**
- **It is described using the ISO pattern in this manual.**

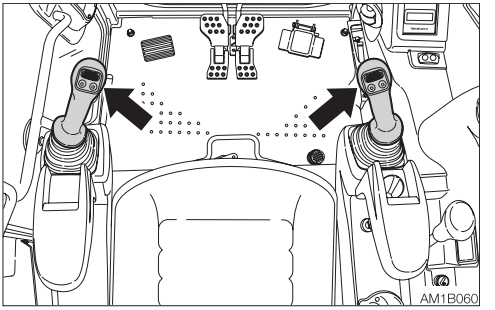

Use these levers to operate the boom, arm, bucket and upperstructure.
Refer to "Lever pattern" on pages 3-8 and 3-9.
Refer to "Operating the working equipment" on pages 3-16 and 3-17.

BLADE LEVER

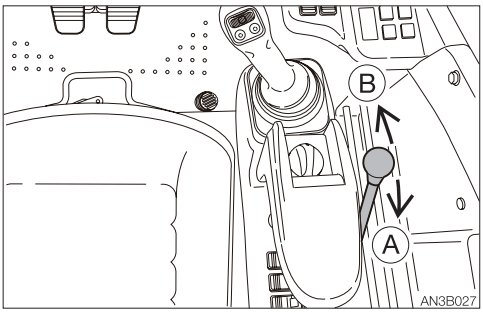

Use this lever to operate the dozer blade.
(A).....Blade up
(B) .....Blade down
Refer to “Operating the dozer blade” on page 3-17.

Machines with the float button (Option)

⚠ WARNING

- **Do not press the float button while the machine is raised by the blade. Doing so will cause the machine to fall. If you must work beneath the raised machine, always use a secure support to keep the machine raised.**
- **Do not press the float button while the blade is raised. Doing so will cause the blade to fall. Lower the blade to the ground before pressing the float button.**
- **Do not travel forward while the blade is in the float mode.**

Float operation

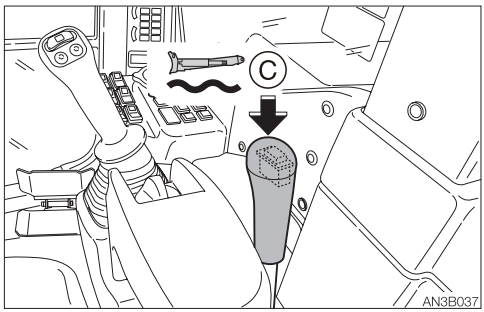

Button (C).....Float mode
Press the float button (C) to set the dozer blade to the float mode.
To cancel the float mode, press the float button (C) again. The float mode is temporally cancelled when the blade lever is tilted backward. To return to the float mode, tilt the blade lever back to the neutral position. Take caution when returning to the float mode.

TRAVEL LEVERS/PEDALS

⚠ WARNING

- **Before operating the travel levers/pedals, make sure that the dozer blade is to the front of the operator's seat. Remember that when the dozer blade is to the rear of the operator's seat, the travel levers/pedals must be operated in the reverse direction from when it is to the front.**
- **Do not rest your foot on the pedal unless operating it for traveling. If the pedal is accidentally stepped while working, the machine may suddenly move and cause serious injury or death.**

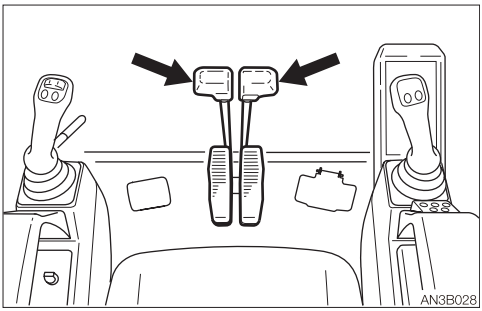

Use these levers/pedals to move forward or backward and to change directions.
Refer to "Operating the travel levers/pedals" on page 3-12.

BOOM SWING PEDAL

⚠ WARNING

Keep the pedal cover to the locked position when not using the pedal. Stepping on a pedal accidentally when it is not locked may cause accidents.

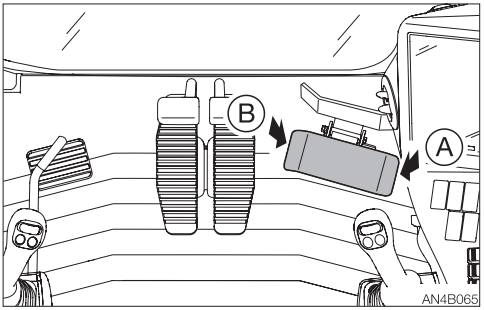

Use this pedal to operate the boom swing.
(A).....Boom swing right
(B) .....Boom swing left
Refer to “Operating the boom swing” on page 3-17.

Pedal lock

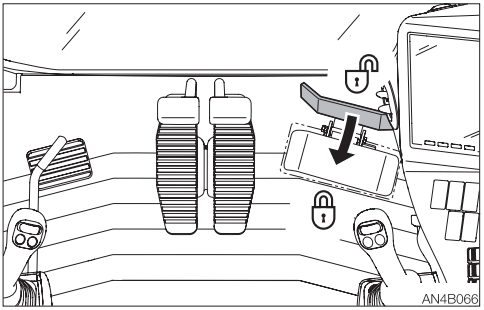

Set the pedal cover over the pedal to lock it. Open the pedal cover from the pedal to unlock it.

ACCESSORIES

AIR CONDITIONER

CAUTIONS ON USE

Ventilate periodically

- When using the air conditioner over an extended period of time, open the windows about once each hour to let in fresh air.
- Your eyes may become irritated if you smoke while using the air conditioner. If this happens, open the windows to let in fresh air Smoking particularly irritates the eyes when the air conditioner is being used. Since the humidity in the cab drops, the cornea becomes dry.
- If the outside air is dirty, set the air conditioner to the circulation mode.

Always maintain good visibility

Working with dirty windows or fogged windows restricts visibility and is dangerous. Always clean dirt and moisture off the windows before working.

- The windows tend to get foggy when the humidity is high. If this happens, turn on the air conditioner to use outside air and the defroster to get rid of the fog.
- If the air conditioner is set to high when using the defroster, the difference between the external and internal temperatures increases, resulting in frost on the outside of the windows. If this happens, either turn the air conditioner off or push the temperature control button to increase the internal temperature.
- Mist may blow out of the air outlets. This is not a malfunction. When moist air passes through the evaporator on the air conditioner unit, water particles in the air freeze and are emitted as mist.

Do not overcool
For health reasons, the air inside the cab should be kept at a temperature at which you feel a little cool when entering the cab from outside (a difference of 5 to 6°C (9 to 11°F)). Remember to adjust the temperature properly.

Do not turn on the air conditioner until the engine is started
To avoid placing an excessive load on the compressor, wait until the engine is started and is running smoothly before turning on the air conditioner.

Let hot air out first
If the machine has been parked in the sun, open the windows and door to let the hot air out of the cab before using the air conditioner.

Caution on refrigerant (gas)
If the refrigerant comes in contact with skin or eyes, it may cause frostbite or eye damage. Never touch the refrigerant or loosen the parts on the cooling circuit.
If the refrigerant gas leaks, keep flames away.

Off-season inspection
Even off season, run the air conditioner for 3 to 5 minutes at least once a week to maintain oil in the various parts of the compressor.

NAMES OF COMPONENTS

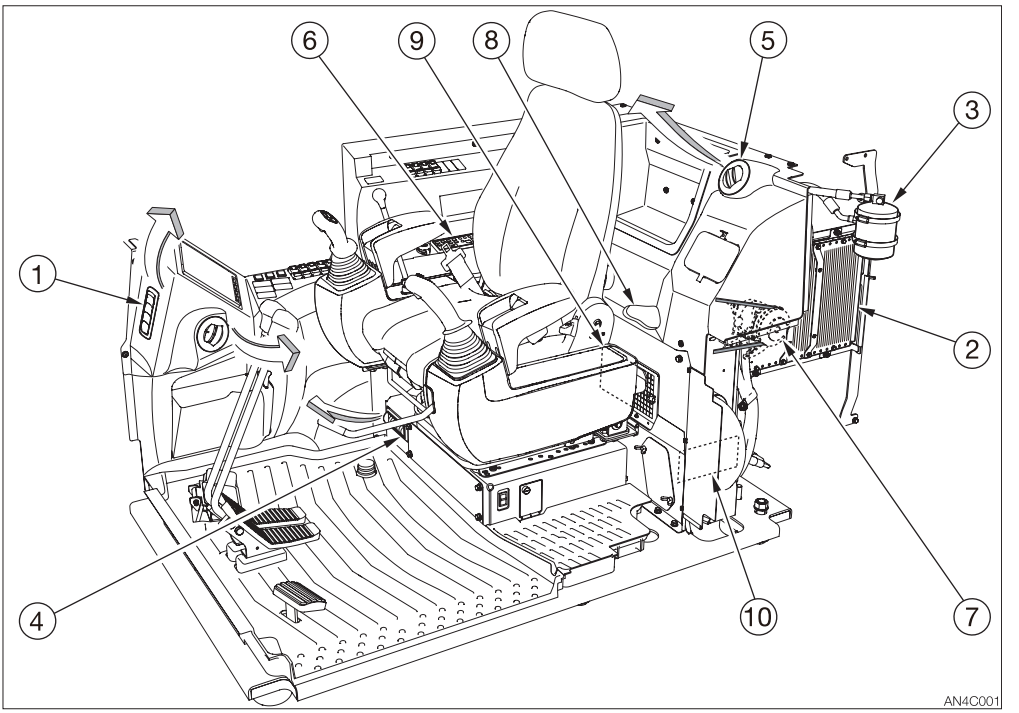

1. Defroster
2. Condenser
3. Receiver dryer
4. Foot outlet
5. Back outlets
6. Control panel
7. Compressor
8. Air conditioner unit
9. Circulation filter
10. Ventilation filter

CONTROL PANEL OPERATION

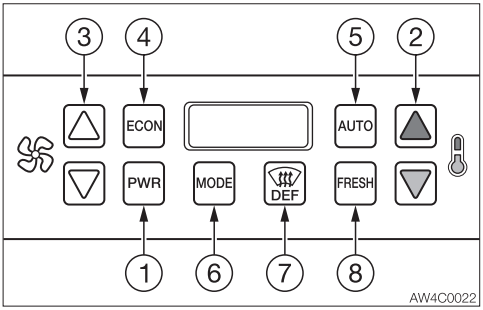

(1) PWR
Powers vehicle Heater-A/C control system on or off. The LED numeric display is illuminated when the unit is turned on. The display will show the current set point temperature.

(2) TEMPERATURE UP/DOWN
Increments the set point temperature up or down. The system will control the electronic water valve and/or the A/C compressor clutch to hold the cab temperature as closely as possible to the set point temperature.

(3) FAN UP/DOWN
Overrides the automatic fan speed control (AUTO) feature. Increments fan speed up or down in 11 steps. The digital display indicates the fan speed setting as a percentage or “HI” when maximum fan speed is reached or “LO” when the minimum fan speed is reached. The speed setting will be shown for 5 seconds before returning to the set point temperature display. The fan speed is maintained until it is changed or if the AUTO key is depressed.

(4) ECON (Economy Mode)
When depressed, locks out the A/C function. The control used only fresh air, fan speed, and water valve control to maintain the set point temperature. Depressing the ECON key will return the system back to normal operation. An indicator light on the digital display indicates when this mode is active. Note that defrost (DEF) overrides the ECON function.

(5) AUTO
Places the system in a fully automatic temperature control mode including fan speed. A panel indicator light indicates when this mode is active. The system will adjust the blower fan speed to the lowest setting necessary to maintain the cab temperature at the displayed set point temperature.

(6) MODE (°C/°F)
Toggles the display units between degrees Celsius and degrees Fahrenheit. The display will show the units selected.

(7) DEF (Defrost icon)
Positions the fresh/recirc air door to the fresh position and turns on the A/C compressor clutch for dehumidification. A panel indicator light indicates when this mode is active. Note that selecting defrost may override previous setting for ECON or FRESH. This will be indicated by the state of the ECON and FRESH key indicator lights. When the defrost mode is de-selected, the system will return to previously selected modes.

(8) FRESH
This key toggles the fresh or recirculation air modes. When the FRESH mode is enabled, outside air is allowed into the vehicle. A panel indicator light indicates when this mode is active. Note that the defrost mode (DEF) will override the FRESH function and enable the fresh air mode.

General system operation
Heater Operation
The ATC automatically controls the Heater-A/C to maintain the cab air temperature close to the set point selected by the temperature control pushbuttons. The ATC will adjust the air temperature blown through the ducts to maintain this temperature. If more heat is desired, increase the set point temperature by pushing the up temperature button. If less heat is desired, decrease the set point by pushing the down temperature button.
To obtain maximum heating, set the set point temperature to 32°C (90°F). The system will put out maximum heat continuously, even if the cab temperature exceeds the set point temperature. Turn the blower fan speed to maximum fan (not AUTO).
In AUTO mode, the fan speed will increase as necessary to warm up the cab to the set point temperature. Once the cab reaches the set point temperature, the fan speed will decrease.
Finer temperature control can be obtained by leaving the control panel in °F units. The temperature units can be changed from °C to °F or °F to °C by toggling the °C/°F button. The current temperature unit will then be shown on the digital display.
A comfortable set point for heating is between 22°C (72°F) and 26°C (78°F). Change the temperature set point inn small amounts for best results. Once a comfortable temperature is reached, this temperature will be maintained without adjusting the set point

Defrosting or defogging operation

Note: If the air conditioner is set to high when using the defroster, the difference between the external and internal temperatures increases, and fog may form on the outside of the windows. If this happens, either turn the air conditioner OFF or push the temperature control button to increase the internal temperature.

This mode is used to be-ice, defrost, or defog the windows by pressing the key with the defrost icon. In certain cold or humid conditions, more heat and airflow is required to clear the windows. The set point temperature and the blower speed should be adjusted as necessary to maintain a clear windshield at all times. For maximum defrost, increase the set point temperature to the maximum setting (32°C or 90°F) and increase the blower speed to maximum fan (not AUTO).

The air conditioner is enabled when in defrost mode. The A/C is used to dehumidify the air entering the cab to remove the fog from the windshield.

The fresh/recirc door is forced to the fresh position in defrost mode. Fresh air is used to help remove the fog from the windshield.

Pressing the defrost key when it is active (indicated by an illuminated light) will deactivate the defrost mode and the system will return to the settings that were in place before the defrost mode was enabled.

Air conditioner (A/C) operation

⚠ CAUTION

- **When the air conditioner is set to the recirculation mode, the air in the cab gradually becomes dirty, so switch to external air ventilate once a comfortable temperature is reached.**
- **Excessive cooling can be harmful to your health. It is best to keep the air inside the cab only about 5 to 6°C (9 to 11°F) cooler than the outside air.**
- **If the excavator has been parked in the sun, open the windows or door to let the hot air out of the cab before using the air conditioner.**

The ATC automatically controls the Heater-A/C to maintain the cab air temperature close to the set point selected with the temperature control pushbuttons. The ATC will adjust the air temperature blown through the ducts to maintain this temperature. If more cooling is desired, decrease the set point by pushing the down temperature button.

To obtain maximum cooling, set the set point temperature to 16°C (60°F). The system will put out maximum cooling continuously, even if the cab temperature drops below the set point temperature. Turn the blower fan speed to maximum fan (not AUTO).

In AUTO mode, the fan speed will be adjusted as necessary to keep the cab at the set point temperature. The farther away the cab temperature is from the set point, the higher the fan speed.

Finer temperature control can be obtained by leaving the control panel in °F units. The temperature units can be changed from °C to °F or °F to °C by toggling the °C/°F button.

The current temperature unit will then be shown on the digital display.

A comfortable set point for cooling is between 20°C (68°F) and 23°C (74°F). Change the temperature set point in small amounts for best results. Once a comfortable temperature is reached, this

temperature will be maintained without adjusting the set point.

Ventilation (Fresh/Recirc)
The unit draws in a mix of outside and recirculated air when in fresh air mode. This allows the cab to maintain a positive cab air pressure to prevent excessive dust from entering the cab. In addition, the fresh air mode prevents the air from becoming stale and humid.
In recirculation mode, only recirculated air is pulled in through the unit. Use this mode for short periods of time to prevent fumes from entering the cab or to obtain maximum cooling or heating.
Inspect and replace both the fresh air and recirculated air filters regularly to obtain proper cab pressurization, optimized unit performance, and correct temperature regulation.

Outlets

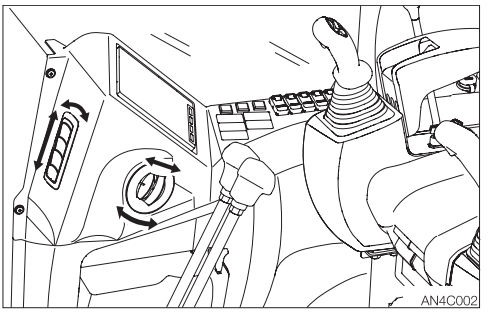

Move the louvers to adjust the air flow direction.

CUP HOLDER

⚠ CAUTION

- **Drinks may be spilled due to vibration when the machine is operating or traveling. Be particularly careful not to burn yourself with hot drinks.**
- **Note that the cigarette lighter or other electric parts may be damaged if drinks are spilled on them.**

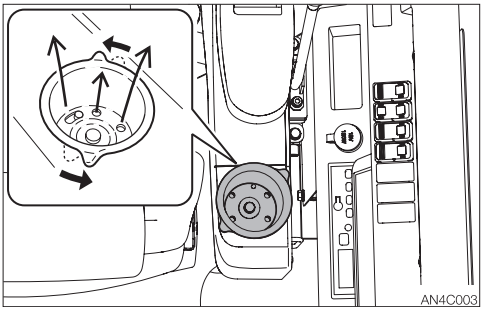

Use to hold cups or bottles.
To warm or cool the cup, turn the cup holder in counterclockwise. Warm or cool wind blows from the bottom of the cup holder.

INTERIOR LIGHT

IMPORTANT: The battery capacity decreases if the interior light is left on for a long time when the engine is stopped. Turn the lamp off when leaving the machine.

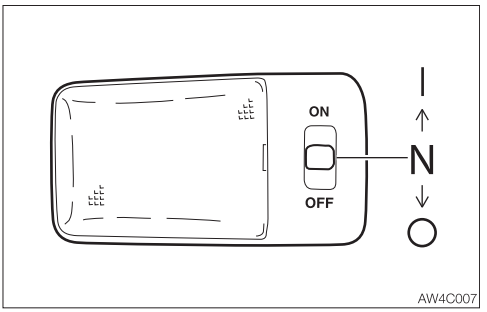

OFF (O).....Lamp is turned off all the time, with no regard for the door being opened or closed.
Neutral (N) .....Lamp is turned on when the door is opened, and it turned off when the door is closed.
ON (I).....Lamp is turned on all the time, with no regard for the door being opened or closed.

12 V POWER SOCKET

⚠ WARNING

Use only those electric products which comply with the specifications of this socket.

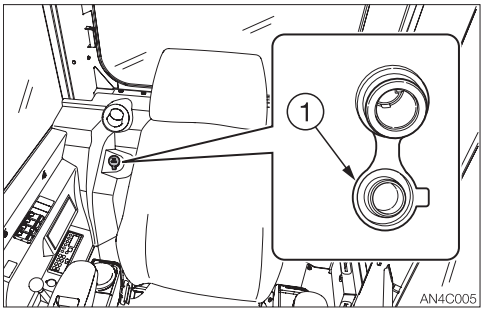

Use this socket to connect the 12 V power supply. When using, be careful not to exceed 12 V/5 A.
To use, open the cap (1).

24 V EXTERNAL POWER SOCKETS

⚠ WARNING

Use only those electric products which comply with the specifications of these sockets.

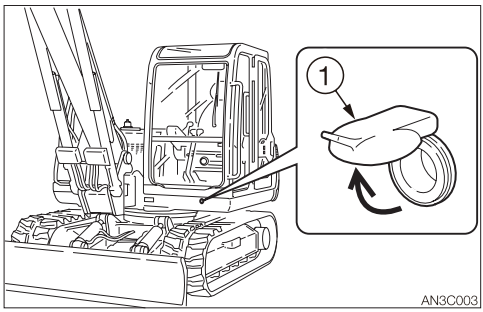

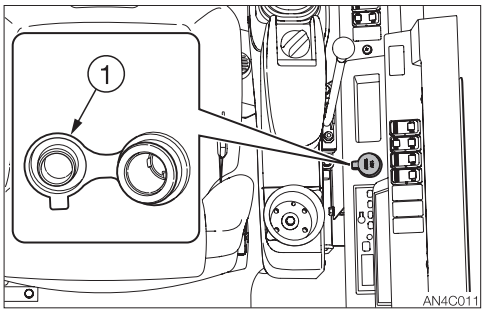

For beacon

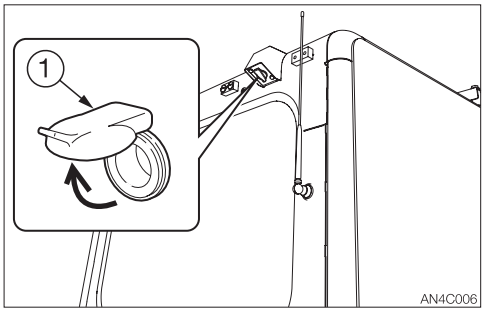

Use these sockets to connect the external power supply. When using, be careful not to exceed 24 V/5 A.
To use, open the cap (1).

RADIO

The type of radio installed varies depending on the machine.
Check which type of radio is installed and refer to the applicable page.
Refer to “Radio” on page 2-76.
Refer to “Radio (Digital Audio Broadcasting not supported)” on page 2-80.
Refer to “Radio (Digital Audio Broadcasting supported)” on page 2-88.

CAUTIONS ON USE

- **To ensure safe operation of the machine, always be sure to keep the volume of the radio down to a level where you can easily hear sounds from outside the machine.**
- **Do not use the radio for a long time when the engine is stopped. Doing so will drain the battery and make it difficult or impossible to restart the engine.**
- **Be careful not to allow water or other liquids to come into contact with the radio. Otherwise, it may result in malfunction.**

NAMES OF COMPONENTS

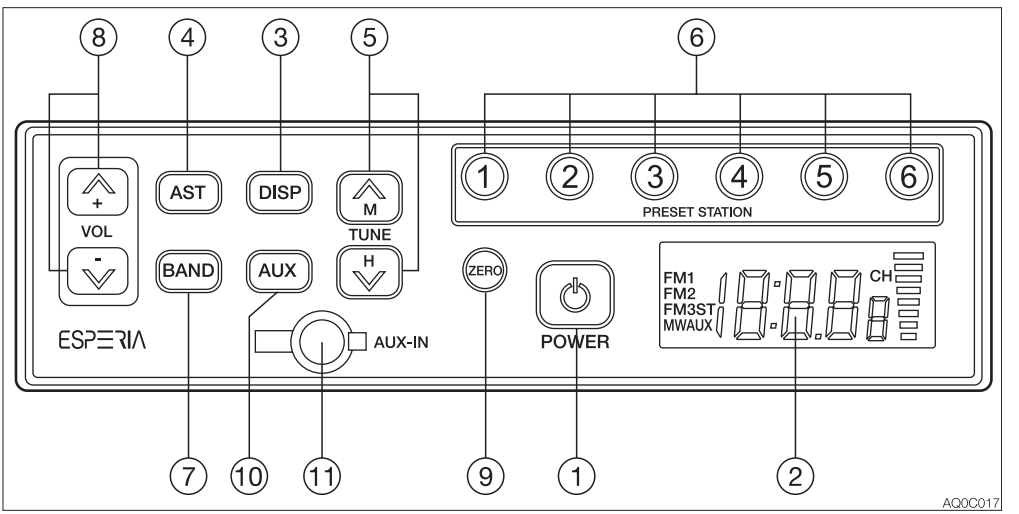

(1) POWER button
Use this button to turn on or off the radio.

(2) LCD
Displays the time/the receiving frequency and the operation mode.

(3) Display button (DISP)
Pressing this button while the frequency is displayed on the LCD changes the display to the clock. Pressing the button again returns to the frequency. If the button is not pressed for five seconds, the display returns to the frequency.

(4) Auto store/Auto seek station (AST)
Press this button to automatically assign receivable radio stations to preset buttons (1 to 6).

(5) Tuning button (TUNE ⏶ ⏷)
Press and hold this button (⏶ or ⏷) for one second or more to start seeking the receivable stations. The seeking stops when a station is found. To cancel tuning halfway, press the button again.
Pressing the TUNE button ⏶ starts seeking stations with higher frequency.
Pressing the TUNE button ⏷ starts seeking stations with lower frequency.
The frequency changes as either button is pressed in one second intervals.

(6) Preset buttons (1 to 6) (PRESET STATION)
Each button can store three FM stations (FM1, FM2, FM3) and one MW (AM) station. For how to set these buttons, refer to “Presetting stations”.

(7) Band button (BAND)
Pressing this button changes the band from FM1 to FM2, FM3 and MW (AM) in this order. The received band and its frequency appear on the display.

(8) VOL buttons
Use these buttons to control the sound volume. Press the button ⏶ to increase the volume and the button ⏷ to decrease the sound volume. Press and hold each button to continuously increase/decrease the volume.

(9) Clock zero set button (ZERO)
Use this button to set the minute to “00” when it is between “55” to “59” or “01” to “05”.
The LCD returns to the frequency display if no more operation is performed for five seconds.

(10) Auxiliary input select button (AUX)
Pressing this button changes the input source to the external device connected to the AUX-IN (11) jack. The display of “AUX” appears on the LCD. Pressing the button again returns to the radio.

(11) Auxiliary input jack (AUX-IN)
Use this jack to connect an external audio source such as a portable music player. Pull off the rubber cap and connect the output terminal (headphone jack) of the portable player to the AUX-IN with the stereo mini-plug (3.5 mm) cord. Be sure that jack is closed with the rubber cap when not in use.

Playing the radio
1. Turn the starter key to the ACC or ON position, and then press the power button (1) to turn on the radio.
2. Select the band, FM or MW (AM) by pressing the BAND button.
3. Select the station with the preset button or the tuning button, and adjust the volume with the volume button.
4. To turn off the radio, press the power button.

Selecting a station-auto select
Press and hold the TUNE button ⏶ for one second or more to start seeking stations in the higher frequencies direction. Press and hold the TUNE button ⏷ for one second or more to start seeking stations in the lower frequencies direction. The radio will stop seeking when it finds an receivable station and start playing.

Selecting a station-manual select
The selection can be done manually. Press the tune ⏶ button to seek stations with higher frequencies. Press the tune ⏷ button to seek stations with lower frequencies.

Presetting stations

1. Press the BAND button to select a band (MW (AM) or FM), and then select the station by pressing the TUNE button for seeking.
2. To assign the selected station to a preset button, press and hold the button to be assigned for one second or more. The number of the preset button appears on the LCD.
3. For more stations to preset, repeat the steps 1 and 2 above.
   - If the preset button on which a station has been assigned is pressed and held for one second or more, the preset information will be modified.
   - If the stored information is erased during battery replacement on the vehicle, assign the stations again to the preset buttons.
   - Each preset button (1 to 6) can store three FM stations (one from each FM1, FM2, FM3) and one AM station.

Auto storing (AST)

Press the AST button while playing the radio. The radio automatically starts seeking the receivable stations within the band currently selected and assign each preset button (1 to 6) a station.

Note: The previous stations stored will be cleared (cancelled) by the auto storing. If the station stored in the preset button is not desirable, try to preset the station manually.

Auxiliary input (AUX)

- Connect a portable audio player and listen to your favorite music.
- Plug a patch cord (without resistor) into the headphone jack of the audio player.
- Plug a stereo mini plug (3.5 mm) into the AUX-IN jack on the radio.
- To listen to an external portable audio player, press the AUX button. (The “AUX” display appears on the LCD and the frequency display is changed to the clock display.)
- To return to the radio, press the AUX button again.
- When connecting, adjust the sound volume level of the audio player so that it is same as that of the radio.
- Adjust the sound volume of the audio player by using the volume control buttons on the radio.
- Do not connect a device with a larger output compared with a portable audio player.

Setting the clock

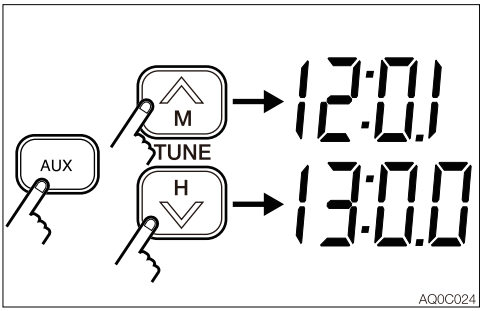

- If a frequency is displayed on the LCD, press the AUX button (auxiliary input) to display the clock.
- Use the tune button to set the minute. Use the tune button to set the hour.
- To set the minute digits to “00” when they are from “55” to “59” or from “01” to “05”, press the ZERO button.

Resetting
(North, Central and South America)
If there are any problems, such as the abnormal display of frequency or failure of selection, reset the radio by pressing the "3" button* while pressing the AST button and the AUX button together. Then, "US"** and the clock display appear on the LCD, indicating that the radio is turned off. Note that the memory stored in the preset button is cleared.

*: "6" button – (Europe, Asia, Oceania)
"5" button – (China)
**: EU – (Europe, Asia, Oceania)
CH - (China)

Switching the volume mode when the radio is on
Switch the modes between SU and FI by pressing the (1) button while pressing the AST and AUX buttons together, when the radio is on.
The SU or FI display appears on the LCD, followed by the radio turning off by itself.
SU mode: .....The volume at power-off is retained.
FI mode: .....The volume at power-off is reset.

SPECIFICATIONS
Power source: .... 12/24 VDC (negative ground)
Maximum power consumption: ..... 3A or less (at max. volume, 24 V)
Maximum output power: ..... 16 W + 16 W (4Ω) (at 28.8 VDC input)
5W+5W (4Ω) (at 14.4 VDC input)
Rated output power: ..... 12 W + 12 W (10% distortion, 4Ω) (at 28.8 VDC input)
3.5 W + 3.5 W (10% distortion, 4Ω) (at 14.4 VDC input)
Dimensions:..... 178 (W) x 50 (H) x 65 (D) mm (excluding protrusions)
Receiving frequency: ..... MW (AM) 531 to 1602 kHz (Europe, Asia), 530 to 1710 kHz (North, Central and South America)
FM 87.5 to 108 MHz (Europe, Asia), 87.9 to 108 MHz (North, Central and South America)
Practical sensitivity: ..... MW (AM) 32 dB or less (S/N 20 dB)
FM 12 dB or less (S/N 30 dB)
S/N ratio:..... MW (AM) 40 dB or more
FM 50 dB or more
AUX-IN: ..... Stereo mini jack (3.5 mm); rated input, 90 mV; 20 kΩ impedance

Note: Specifications and dimensions may be changed without notice.

TROUBLESHOOTING
Refer to "Troubleshooting" on page 2-96.