RADIO (DIGITAL AUDIO BROADCASTING NOT SUPPORTED)

The type of radio installed varies depending on the machine.
Check which type of radio is installed and refer to the applicable page.
Refer to “Radio” on page 2-76.
Refer to “Radio (Digital Audio Broadcasting not supported)” on page 2-80.
Refer to “Radio (Digital Audio Broadcasting supported)” on page 2-88.

CAUTIONS ON USE

- **To ensure safe operation of the machine, always be sure to keep the volume of the radio down to a level where you can easily hear sounds from outside the machine.**
- **Do not use the radio for a long time when the engine is stopped. Doing so will drain the battery and make it difficult or impossible to restart the engine.**
- **Be careful not to allow water or other liquids to come into contact with the radio. Otherwise, it may result in malfunction.**

NAMES OF COMPONENTS

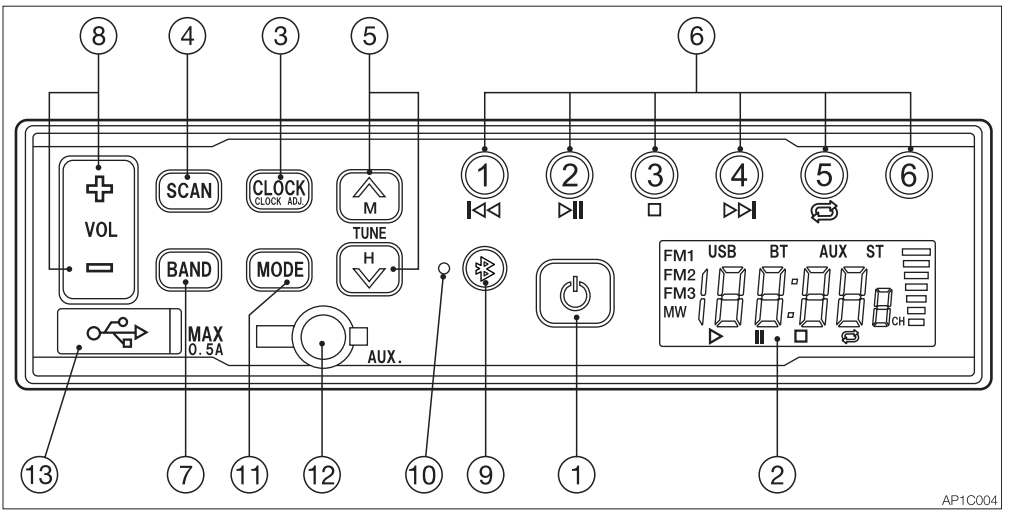

(1) POWER button
Use this button to turn on or off the radio.

(2) LCD
<Home screen>

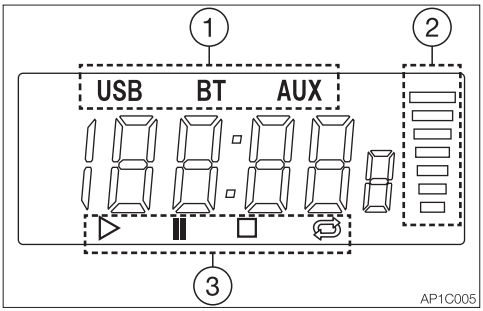

(1) Operation mode
USB: USB audio mode
BT: Bluetooth mode
AUX: Auxiliary in mode
(2) Volume level
(3) Audio control (For USB audio or Bluetooth mode only)

<Radio mode screen>

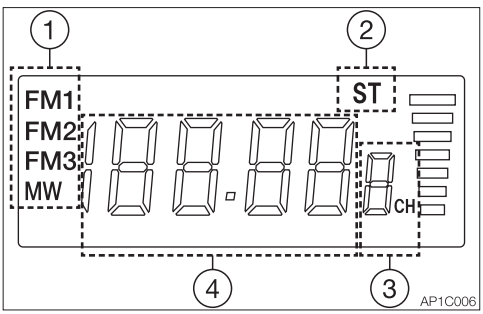

(1) Radio band display
FM1, FM2 FM3: FM band (Six stations can be preset to each band.)
MW: AM band
(2) Stereo display
Turns on when receiving stereo.
(3) Preset station
(4) Display of frequency/clock

Displays the time/the receiving frequency and the operation mode.

(3) Clock button (CLOCK)
Pressing this button changes the display to the clock. Pressing the button again displays the frequency. If the button is not pressed for three seconds, the display returns to the frequency. Pressing and holding the button enters the clock setting mode.

(4) Auto store/Auto seek station (SCAN)
Press this button to automatically assign receivable radio stations to preset buttons (1 to 6).

(5) Tuning button (TUNE ⏶ ⏷)
Press and hold this button (TUNE ⏶ or TUNE ⏷) for two seconds or more to start seeking the receivable stations. The seeking stops when a station is found. To cancel tuning halfway, press the button again.
Pressing the TUNE ⏶ button starts seeking stations with higher frequency.
Pressing the TUNE ⏷ button starts seeking stations with lower frequency.

(6) Preset buttons (1 to 6) (PRESET STATION)
Each button can store three FM stations (FM1, FM2, FM3) and one MW (AM) station.

(7) Band button (BAND)
Pressing this button changes the band from FM1 to FM2, FM3 and MW (AM), in this order.

(8) Volume control button (VOL ✚ ▭)
Press the VOL ✚ button to increase the volume and the VOL ▭ button to decrease the volume.

(9) Bluetooth button (B)
Press this button to connect to the already paired and most recently connected Bluetooth-enabled device.

(10) Bluetooth LED
Lights up when a Bluetooth-enabled device is connected. Flashes while in the pairing standby mode.

(11) Operation mode select button (MODE)
Pressing this button changes the operation mode from FM or MW (AM) to Bluetooth, USB and AUX, in this order.

(12) Auxiliary input jack (AUX)
Open the rubber cap and connect to an earphone jack of a smartphone or portable audio player with a commercially available stereo mini-plug (3.5 mm) cable. Be sure that jack is closed with the rubber cap when not in use.

(13) USB jack
Open the rubber cap and connect to a USB flash drive with a commercially available USB extension cable.
Be sure that jack is closed with the rubber cap when not in use.

Setting the clock

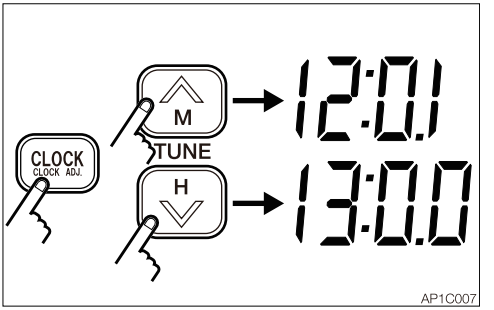

1. Press and hold the CLOCK button for at least two seconds to enter the clock setting mode. (The time display starts flashing.)
2. Use the tune ⏶M button to set the minute. Use the tune ⏷H button to set the hour.
3. Press the CLOCK button again to return to the clock display.

Playing the radio

1. Select the band, FM or MW (AM) by pressing the BAND button.
2. Select the station with the preset button or the tuning button.
3. Adjust the volume with the VOL (− or +) button.

Seeking stations (auto)

Press and hold the TUNE ∧ button for two seconds or one to start seeking stations in the higher frequencies direction. Press and hold the TUNE ∨ button for two seconds or more to start seeking stations in the lower frequencies direction. The radio will stop seeking when it finds a receivable station and start playing.

Manual tuning

Press the TUNE ∧ button to increase the frequency by one step. Press the TUNE ∨ button to decrease the frequency by one step.

Presetting stations

1. Press the BAND button to select a band (MW (AM) or FM), and then select the desired station.
2. To assign the selected station to a preset button, press and hold the button to be assigned for three seconds or more. The number of the preset button appears on the LCD to indicate that it is stored in the preset memory.
3. For more stations to preset, repeat the steps 1 and 2 above.
   - Each preset button (1 to 6) can store three FM stations (FM1, FM2, FM3) and one MW (AM) station.

Auto storing stations (SCAN)

Press the SCAN button while playing the radio. The radio automatically starts seeking the receivable stations in the band currently selected and assign each preset button (1 to 6) a station.

Note: The previous stations stored will be cleared (cancelled) by the auto storing. If the station stored in the preset button is not desirable, try to preset the station manually.

Playing back audio content stored on a USB flash drive
To enter the USB playback mode, first insert the USB flash drive while playing the radio and then press the MODE button. (The LCD changes to the time display and “USB” appears on the LCD.)
When playing back audio content stored on the USB drive, the following operations are available using the buttons (1) to (5).

(1) **Backward (⏮) button**
Moves one track backward and starts playing back from the beginning of it.

(2) **Playback/Pause (⏯) button**
Pauses playback when pressed during playback. When pressed again, starts playback from the point where the playback was paused.

(3) **Stop (⏹) button**
Stops playback when pressed during playback. When the Play/Pause button is pressed, the unit starts playing back the stopped track from the beginning.

(4) **Forward (⏭) button**
Moves one track forward and starts playing back from the beginning of it. Pressing and holding the button will fast forward the current track.

(5) **Repeat (🔁) button**
When pressed during playback, the unit repeats the current track.
To cancel repeating, press the button again.

Notes:
- When in the USB playback mode, do not insert or remove the USB drive.
- ESPERIA makes no warranty that the unit is compatible with every USB storage device.
- To connect the USB flash drive to the unit, use a commercially available USB extension cable.
- Do not connect any device other than a USB flash drive. The USB jack cannot be used to charge a device such as a smartphone.
- Please be advised that ESPERIA bears no responsibility for any damage to or loss of data on the USB drive arising from the use of the unit.

Using the Bluetooth wireless technology
You can use your Bluetooth-enabled mobile phone or audio device by connecting it to the unit.
When a mobile phone is connected, incoming calls will be announced.
Note: Since the unit is not equipped with a microphone, the unit cannot be used for phone calls.

To use the Bluetooth device, certain profiles must be able to interpreted.
The unit is compatible with the following profiles:

Incoming mobile phone call
HFP (Hands-Free Profile)

Bluetooth audio
A2DP (Advanced Audio Profile)
AVRCP (Audio Video Remote Control Profile)
Note: The Bluetooth® word mark and logos are owned by the Bluetooth SIG, Inc. and any use of such marks by ESPERIA is under license.

Pairing a Bluetooth-enabled device
When pairing the unit with a Bluetooth device for the first time, you have to pair with each other.
Once pairing is done, the unit and the paired Bluetooth device can recognize each other.

Note: Before pairing with the unit, turn on the Bluetooth feature on the Bluetooth device. Refer to the instruction manual of the Bluetooth device for further instructions.

1. Press the MODE button to switch to the Bluetooth mode.
2. Turn on the Bluetooth feature on the Bluetooth-enabled device.
3. Press and hold the Bluetooth button until two short beeps are heard, indicating the unit has entered the paring standby mode.
4. Select “CAR RADIO” on the Bluetooth-enabled device.

Note: Only one Bluetooth-enabled device can be paired and used at a time. To use a different device, follow the steps 1 to 4 for pairing again.
Note: At power-up, the unit automatically reconnects to the device most recently connected. When you leave the machine, cancel pairing by pressing and holding the Bluetooth button until two short beeps are heard, to avoid misconnection.

Playing back audio content stored on a Bluetooth-enabled device
When a Bluetooth-enabled device has been paired with the unit, check if the Bluetooth LED is lit, and then press the MODE button to enter the Bluetooth mode.
While the Bluetooth device is connected, the following operations are available using the buttons (1) to (5).

(1) Backward (⏮) button
Starts playing back from the beginning of the track currently playing. Pressing and holding the button will skip backward to the desired track.

(2) Playback/Pause (⏯) button
Pauses playback when pressed during playback. When pressed again, starts playback from the point where the playback was paused.

(3) Stop (⏹) button
Stops the currently playing audio.

(4) Forward (⏭) button
Moves one track forward and starts playing back from the beginning of it.

(5) Repeat (🔁) button
Disabled in the Bluetooth mode.

Note: If no sound is heard from the unit, check to see that the output destination of the music from the Bluetooth device is set to “CAR RADIO”.

Receiving an incoming call on the Bluetooth-enabled device
If a Bluetooth-enabled device has been connected, the unit enters the standby mode and waits for a call. When an incoming call arrives, “CALL” appears on the display, the volume of the car stereo is set to mute and the ringtone is heard from the speaker.

Auxiliary input (AUX)
- Connect a portable audio player and listen to your favorite music.
- Plug a stereo mini plug (3.5 mm) into the AUX-IN jack on the radio.
- Press the MODE button and select “AUX” to switch to the AUX mode. (The “AUX” display appears on the LCD and the frequency display is changed to the time display.)
- To return to the radio, press the MODE button again.
- When connecting, adjust the sound volume level of the audio player so that it is same as that of the radio.
- The sound volume can be adjusted with the volume control buttons on the unit.
- Do not connect a device with a larger output compared with a portable audio player.

Resetting the radio
If there is a problem such as display of incorrect frequency or failure in selecting, reset the unit by pressing the POWER button while pressing the Bluetooth button [B]. (In this case, the preset memory stations and clock are cleared.)
If you cannot reset the unit, please contact your sale or service dealer for help.

SPECIFICATIONS

Power source: .....12/24 VDC (negative ground)
Max. power consumption: .....2 A or less (at max. volume, 24 V)
Max. output power: ..16 W + 16 W (4Ω)
Rated output power: 14 W + 14 W (10% distortion, 4Ω)
Dimensions:.....178 (W) x 50 (H) x 91 (D) mm (without projections)
Receiving frequency: MW (AM): 531 to 1602 kHz (EU), 530 to 1710 kHz (USA)
FM: 87.5 to 108 MHz (USA)
Practical sensitivity: ..MW (AM) 20 µV (S/N 20 dB)
FM 3 µV (S/N 30 dB)
S/N ratio:.....FM 50 dB
AUX IN: .....Stereo mini jack (3.5 mm); max. input, 1 V; rated input, 90 mV
Bluetooth standard: ..Ver. 2.1 + EDR
Output:.....Class 2 (max. communication range 10 m)
Receiving frequency: 2.4 to 2.48 GHz
Supported profile:.....HFP V 1.5, A2DP V 1.2, AVRCP V 1.0
USB standard:.....USB 2.0/1.0
Supported file
• MP3: .....MPEG 1/2/2.5 .....Audio Layer 2/3
• WMA: .....Windows Media ™ Audio
Supported format: ....FAT16/FAT32 file system
Max. output power: ..0.5 A

Note: The appearance and specifications are subject to change for improvement without prior notice.

TROUBLESHOOTING

Refer to “Troubleshooting” on page 2-96.

RADIO (DIGITAL AUDIO BROADCASTING SUPPORTED)

The type of radio installed varies depending on the machine.
Check which type of radio is installed and refer to the applicable page.
Refer to “Radio” on page 2-76.
Refer to “Radio (Digital Audio Broadcasting not supported)” on page 2-80.
Refer to “Radio (Digital Audio Broadcasting supported)” on page 2-88.

CAUTIONS ON USE

- **To ensure safe operation of the machine, always be sure to keep the volume of the radio down to a level where you can easily hear sounds from outside the machine.**
- **Do not use the radio for a long time when the engine is stopped. Doing so will drain the battery and make it difficult or impossible to restart the engine.**
- **Be careful not to allow water or other liquids to come into contact with the radio. Otherwise, it may result in malfunction.**

NAMES OF COMPONENTS

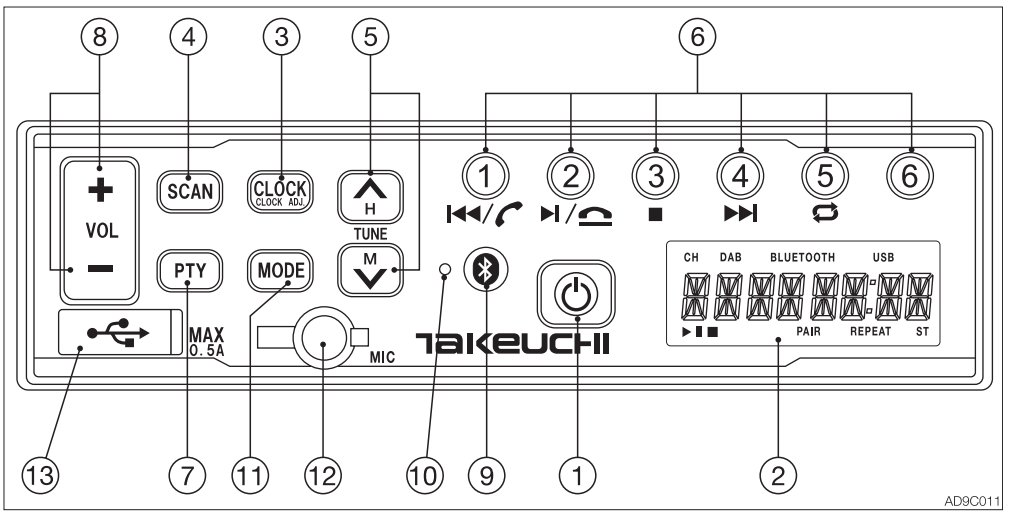

(1) POWER button
Use this button to turn on or off the radio.

(2) LCD
Home screen

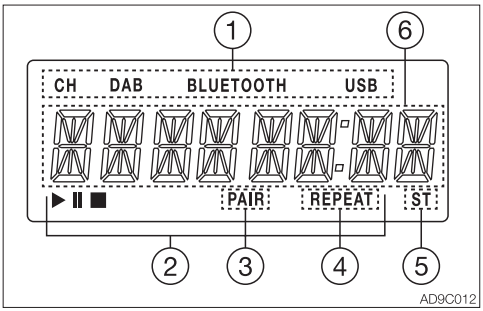

(1) Operation mode
CH: Radio mode
DAB: DAB mode
BLUETOOTH: Bluetooth mode
USB: USB mode
(2) Audio control (for USB or Bluetooth mode only)
(3) Bluetooth paired
(4) Only when the USB mode is set
(5) FM stereo reception
(6) Radio mode, Frequency, Preset Station/ Volume/Clock/Text

(3) Clock button (CLOCK/CLOCK ADJ.)
Press this button while playing the radio to display the clock. Press the button again to display the frequency.
Pressing and holding this button for at least two seconds displays ADJ and makes the time flash on the LCD, indicating that the unit is in the clock adjustment mode.
Press this button in the DAB mode to change the LCD display as follows:
Clock → CH frequency → CH list

(4) Auto store/Auto seek station (SCAN)
Press this button to automatically assign receivable radio stations to preset buttons (1 to 6).

(5) Tuning button (TUNE ⏶ ⏷)
Press and hold this button (TUNE ⏶ or TUNE ⏷) for two seconds or more to start seeking the receivable stations. The seeking stops when a station is found. To cancel tuning halfway, press the button again.
Pressing the TUNE ⏶ button starts seeking stations with higher frequency.
Pressing the TUNE ⏷ button starts seeking stations with lower frequency.

(6) Preset buttons (1 to 6) (PRESET STATION)
One FM and one MW (AM) station can be stored in each button.

(7) Program type button (PTY)
Press the PTY button in the DAB mode to display the currently received service component label, service label and PTY information.
Service component label → Service label → PTY

(8) Volume control button (VOL ✚ ▭)
Press the VOL ✚ button to increase the volume and the VOL ▭ button to decrease the volume.

(9) Bluetooth button (ⓑ)
Press this button to connect to the already paired and most recently connected Bluetooth-enabled device.

(10)Bluetooth LED
Lights up when a Bluetooth device is connected and turns off when disconnected. Flashes while searching for a Bluetooth device.

(11)Operation mode select button (MODE)
Pressing this button changes the operation mode in order: FM → MW (AM) → DAB →Bluetooth → USB.

(12)Microphone input jack (MIC)
Open the rubber cap and connect a commercial microphone (3.5 mm dia.). Be sure to close the jack with the rubber cap when not in use.

(13)USB jack
Open the rubber cap and connect to a USB flash drive with a commercially available USB extension cable.
Be sure to close the jack with the rubber cap when not in use.

Setting the clock

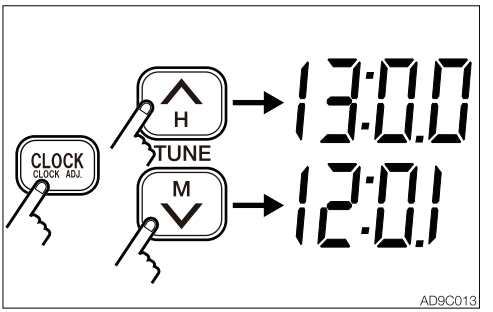

1. Press and hold the clock (CLOCK/CLOCK ADJ.) button for at least two seconds. ADJ appears on the LCD and the time starts flashing to indicate that the unit has entered the clock adjustment mode.
2. Use the [⌃H] button to set the hours and the [⌄M] button to set the minutes.
3. Press the clock (CLOCK/CLOCK ADJ.) button again to return to the clock display (frequency in the radio mode).

Playing DAB/DAB+

Digital audio broadcasting (DAB) is one of the digital radio broadcasting systems available today.
It delivers digital quality sound without annoying interference and signal distortion. It can also transmit text and data.

1. Select DAB by using the MODE button.
2. Press the SCAN button to automatically start seeking receivable stations and assign a station to each preset button (1 to 6).
3. Select the desired station by using any of the buttons: 1 to 6, [⏶] and [⏷].

Clock Display, DAB/DAB+ PTY

Press the PTY button to display the currently received service component label, service label and PTY information. Press the [CLOCK] button to display the clock, CH frequency and CH list.

Playing the radio

1. Select the band, FM or MW (AM) by pressing the MODE button.
2. Select the station with the preset button or the tuning button.
3. Adjust the volume with the VOL (− or +) button.

Seeking stations (auto)

Press and hold the TUNE ⏶ button for two seconds or more to start seeking stations in the higher frequency direction. Press and hold the TUNE ⏷ button for two seconds or more to start seeking stations in the lower frequency direction. The radio will stop seeking when it finds a receivable station and start playing.

Manual tuning

Press the TUNE ⏶ button to increase the frequency by one step. Press the TUNE ⏷ button to decrease the frequency by one step.

Presetting stations

1. Press the MODE button to select a band (MW (AM) or FM), and then select the desired station.
2. To assign the selected station to a preset button, press and hold the button to be assigned for three seconds or more. The number of the preset button appears on the LCD to indicate that it is stored in the preset memory.
3. To preset more stations, repeat steps 1 and 2 above.
   - One FM and one MW (AM) station can be stored in each button.

Auto storing stations (SCAN)

Press the SCAN button while playing the radio. The radio automatically starts seeking the receivable stations in the band currently selected and assigns a station to each preset button (1 to 6).
Note: The previous stations stored will be cleared (cancelled) by the auto storing. If the station stored in a preset button is not wanted, try to preset the station manually.

Playing back audio content stored on a USB flash drive

To enter the USB playback mode, first insert a USB flash drive while playing the radio and then press the MODE button. (The LCD changes to the time display and “USB” appears on the LCD.)

When playing back audio content stored on the USB drive, the following operations are available using buttons (1) to (5).

(1) Backward (⏮) button

Moves one track backward and starts playing it back from the beginning.

(2) Playback/Pause (⏯) button

Pauses playback when pressed during playback. When pressed again, starts playback from the point where the playback was paused.

(3) Stop (⏹) button

Stops playback when pressed during playback. When the Play/Pause button is pressed, the unit starts playing back the stopped track from the beginning.

(4) Forward (⏭) button

Moves one track forward and starts playing it back from the beginning. Pressing and holding the button will fast forward the current track.

(5) Repeat (🔁) button

When pressed during playback, the unit repeats the current track.

To cancel repeating, press the button again.

Notes:

- Do not insert or remove the USB flash drive while in the USB playback mode.
- ESPERIA makes no warranty that the unit is compatible with every USB storage device.
- Use a commercial USB extension cable to connect a USB flash drive to the unit. If you have no extension cable, use a short-type USB flash drive.
- Do not connect any device other than a USB flash drive. The USB jack cannot be used to charge a device such as a smartphone.
- Please note that ESPERIA bears no responsibility for any damage to or loss of data on the USB drive arising from the use of the unit.
- A USB flash drive supports compressed audio formats such as MPEG-1 audio layer 3 (MP3, up to 192 kbps) and Windows Media Audio (WMA).

Using Bluetooth wireless technology

You can use your Bluetooth-enabled mobile phone or audio device by connecting it by Bluetooth to the unit.

When a mobile phone is connected, incoming calls will be announced.

To use a Bluetooth device, certain profiles must be able to be interpreted.

The unit is compatible with the following profiles:

Incoming mobile phone call
HFP (Hands-Free Profile)

Bluetooth audio
A2DP (Advanced Audio Profile)
AVRCP (Audio Video Remote Control Profile)
Note: The Bluetooth® word mark and logos are owned by the Bluetooth SIG, Inc. and any use of such marks by ESPERIA is under license.

Pairing a Bluetooth-enabled device
The unit must be paired with a Bluetooth-enabled device for the first time.
Once pairing is done, the unit and the paired Bluetooth device can recognize each other.
Note: Before pairing with the unit, turn on the Bluetooth feature on the Bluetooth device. Refer to the instruction manual of the Bluetooth device for further instructions.

1. Press the MODE button to switch to the Bluetooth mode.
2. Turn on the Bluetooth feature on the Bluetooth-enabled device.
3. Press and hold the Bluetooth button until two short beeps are heard, indicating the unit has entered the pairing standby mode.
4. Select “CAR RADIO 2” on the Bluetooth-enabled-device.
5. The Bluetooth LED lights up or PAIR appears on the LCD to indicate that the pairing is complete.
6. If the pairing fails, cancel it by pressing and holding the [ⓑ] button until a beep sound is heard, and then pair the device again.

Note: Only one Bluetooth-enabled device can be paired and used at a time. To use a different device, follow steps 1 to 6 for pairing again.
Note: At power-up, the unit automatically reconnects to the device most recently connected. When you leave the machine, cancel pairing by pressing and holding the Bluetooth button until two short beeps are heard, to avoid misconnection.

Playing back audio content stored on a Bluetooth-enabled device
When a Bluetooth-enabled device has been paired with the unit (the Bluetooth LED is lit or PAIR is displayed on the LCD), press the MODE button to enter the Bluetooth mode. When the Bluetooth device is connected, use buttons (1), (2) and (4) to control the playback.

(1) Backward (⏮) button
Starts playing back from the beginning of the track currently playing. Pressing and holding the button will skip backward to the desired track.

(2) Playback/Pause (⏯) button
Pauses playback when pressed during playback. When pressed again, starts playback from the point where the playback was paused.

(4) Forward (⏭) button
Moves one track forward and starts playing it back from the beginning.

Note: The backward, playback and forward operations may not be available depending on the type of your mobile phone.
Note: If no sound is heard from the unit, check that the output destination of the music from the Bluetooth device is set to “CAR RADIO 2”.

Hands-free calling with a Bluetooth-enabled device
If a Bluetooth-enabled device has been connected, the unit enters the standby mode and waits for a call. When an incoming call arrives, “CALL IN” appears on the display, the volume of the car stereo is set to mute and the ringtone is heard from the speaker.

1. Press the start call [ ] button to answer the call.
2. Press the end call [ ] button to end the call.

Note: This unit does not guarantee connectivity between all types of mobile phones.
Note: This unit has no internal microphone for calling; please have your microphone ready.
Note: Depending on the type of mobile phone, it may not be possible to operate the unit when a call arrives, sound may not be heard, or calls may not be available.
Note: After connecting to a mobile phone, calls may not be possible if the phone is set to “Prioritize Bluetooth-enabled device”.
Note: We recommend that you perform a test call before use.

Selecting the reception area
1. Press and hold both the SCAN and the CLOCK/CLOCK ADJ. buttons for at least two seconds.
2. AREA SEL appears on the LCD.
3. Press the preset buttons (1 to 5) to display a different area on the LCD.
4. When the desired area appears, press the preset button 6 to confirm the reception area.

Area	DAB	Preset button
Japan	No	1
USA	No	2
Europe	Yes	3
Asia, Oceania	No	4
Asia, Oceania	Yes	5

SPECIFICATIONS

Power source: .....12/24 VDC (negative ground)
Max. power consumption: .....2.0 A (at max. volume, 28.8 VDC)
Max. output power: ..16 W + 16 W (4Ω, 28.8 VDC)
Rated output power: 14 W + 14 W (1 kHz, 10%, 4Ω, 28.8 VDC)
Dimensions:.....178 (W) x 48 (H) x 100 (D) mm
DAB section
Receiving frequency range: .....174.928 to 239.200 MHz
FM section
Receiving frequency range: .....87.5 to 108.0 MHz (EU), 87.9 to 108 MHz (USA)
Usable sensitivity: .....12 dBµV
S/N Ratio:.....60 dB
MW section
Receiving frequency range: .....531 to 1602 kHz (EU), 530 to 1710 kHz (USA)
Usable sensitivity: .....32 dBµV
S/N Ratio:.....40 dB
Bluetooth standard: ..Ver. 5.0
Output:.....Class 2 (max. communication range 10 m)
Supported profiles: ...HFP V. 1.7, A2DP V. 1.3, AVRCP V. 1.6
USB standard:.....USB 2.0/1.0
Folder structure: .....8 levels
Supported files: .....65,545 files

Supported audio formats
- MP3: .....MPEG 1 Audio Layer 3
- WMA: .....Windows Media™ Audio

Supported format: ....FAT16/FAT32 file system
Max. output power: ..DC5V, 0.5 A
Mic-in jack
Size: .....3.5 mm dia.
Output voltage:.....5 VDC

Note: The appearance and specifications are subject to change for improvement without prior notice.

TROUBLESHOOTING

For symptoms not included in the table below or if the problem persists after the proper remedies have been taken, consult your sales or service dealer.

General

Symptoms	Major causes	Remedies
Radio does not operate or the display is inaccurate when the button is pressed.	• CPU malfunction due to noises, etc.	• Reset the unit by referring to “Resetting the radio” or “Selecting the reception area”. Note that once reset, all settings are cleared; set the unit again.
The clock is not displayed.	• Backup power supply (orange cable) is not connected.	• Consult your sales or service dealer for help.

DAB/DAB+

Symptoms	Major causes	Remedies
DAB/DAB+ is not received.	• The selected service may not be broadcasting.	• Select a service currently broadcasting.

Radio

Symptoms	Major causes	Remedies
Sound is noisy.	• Incorrect frequency for the station	• Tune to the correct frequency for the station.
	• Antenna (pillar antenna) is not extended.	• Be sure to extend the pillar antenna when using the radio.
	• Antenna is not grounded or properly installed.	• Consult your sales or service dealer for help.
	• The antenna is not connected to the power supply	• The power supply must be connected to the antenna with a built-in booster. For details on the connection, contact your sales or service dealer.

Radio

Symptoms	Major causes	Remedies
Unrealistic frequency is displayed.	• CPU malfunction due to noise, etc., etc.	• Reset the unit by referring to "Resetting the radio" or "Selecting the reception area". Note that once reset, all settings are cleared; set the unit again.

USB

Symptoms	Major causes	Remedies
No sound is heard.	• The USB flash drive has no MP3/WMA files.	• Write the MP3/WMA files correctly on the USB flash drive.
	• The files on the drive are not MP3/WMA.	• Use the MP3/WMA files properly encoded.
Sound skipping occurs. Noises are heard.	• The MP3/WMA files are not properly encoded.	• Use the MP3/WMA files properly encoded.
A USB device is not recognized.	• The USB flash drive is damaged.	• Replace the USB flash drive with a new one.
	• The USB connector is not properly connected.	• Disconnect the USB connector from the unit, and then reconnect it.
	• The USB flash drive is not formatted to FAT32/16.	• Format the USB flash drive to FAT32/FAT16, and then rewrite the MP3/WMA file. Be sure to back up the files on the drive before formatting it.

Bluetooth

Symptoms	Major causes	Remedies
A Bluetooth device cannot be connected.	• The Bluetooth device is not connected.	• Some Bluetooth devices require longer time for connection and cannot be reconnected automatically. Check if the Bluetooth button is lit. If it does not turn on after a while, re-pair the device by referring to “Pairing a Bluetooth-enabled device”.
	• Another Bluetooth device is connected.	• If another Bluetooth device is connected, re-pair the device by referring to “Pairing a Bluetooth-enabled device”.
A Bluetooth device cannot be remote controlled.	• The AVRCP profile is not connected.	• Remove all Bluetooth devices connected to the Bluetooth-enabled device, and then re-pair the device by referring to “Pairing a Bluetooth-enabled device”.
	• The connection link between the unit and the device may be corrupted.	• Pair the Bluetooth device again with the unit by referring to “Pairing a Bluetooth-enabled device”.
	• AVRCP is not supported	• Check the profiles supported by the Bluetooth-enabled device.

Bluetooth

Symptoms	Major causes	Remedies
No sound is heard from the Bluetooth audio.	• The volume on the Bluetooth-enabled device is too low.	• The volume of the Bluetooth audio playback is dependent on the volume level set on the Bluetooth device Set the volume on the Bluetooth device to a proper level.
	• Output destination of the Bluetooth device is not set to “CAR RADIO” or “CAR RADIO 2”.	• Make sure that the Bluetooth device’s output destination for music, etc. is set to “CAR RADIO” or “CAR RADIO 2”.
Phone function is not available.	• The radio (Digital Audio Broadcasting not supported) does not support phone calls using Bluetooth. Some types of mobile phone may connect to the unit using the call profile.	• Change the microphone setting from the unit to the mobile phone microphone by referring to the instruction manual of the mobile phone being used.
The Bluetooth audio is interrupted after receiving an incoming call.	• Some mobile phones cannot resume the Bluetooth audio after a phone call interruption.	• After the phone call, re-pair the mobile phone with the unit by referring to “Pairing a Bluetooth-enabled device”.

Regional limitation

To use a Bluetooth-equipped radio, “radio wave authentication” must be obtained in the country where the radio is to be used.
It can be used in the countries listed below, as of August 2017. To use it in other countries, please contact your service or sales dealer for assistance.

Countries where a Bluetooth-equipped radio can be used
Ireland, Italy, UK, Estonia, Austria, Holland, Cyprus, Greece, Croatia, Sweden, Spain, Slovakia, Slovenia, Czech, Denmark, Germany, Hungary, Finland, France, Bulgaria, Belgium, Poland, Portugal, Malta, Latvia, Lithuania, Rumania, Luxemburg, Iceland, Norway, Liechtenstein, Switzerland, Turkey, USA, Canada, Japan

AUXILIARY HYDRAULIC LINES

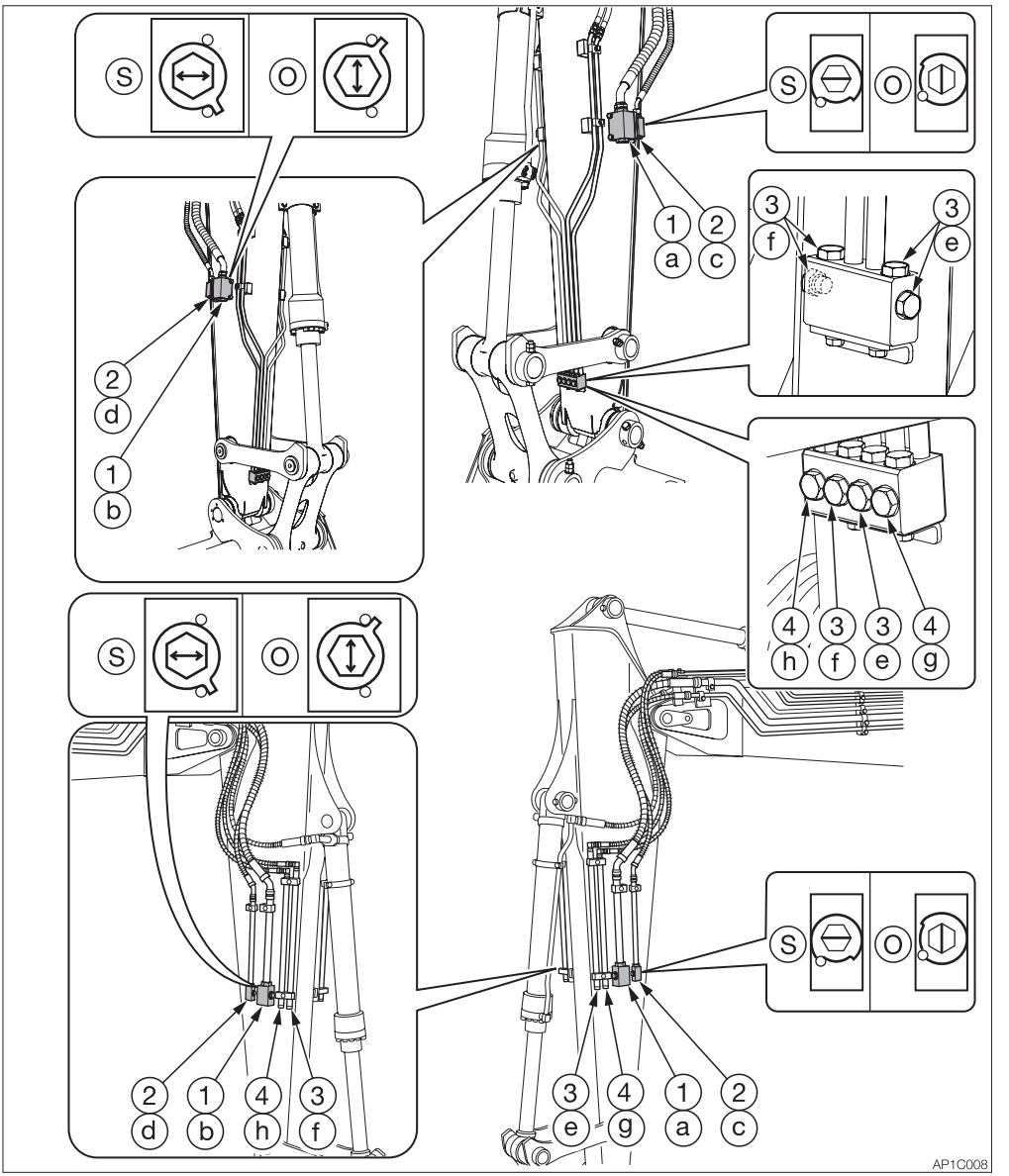

⚠ WARNING

Oil may spurt out if pipes disconnected before releasing the pressure in the hydraulic system.

- **Immediately after the engine is stopped and while the safety lock lever is still in the unlock position, turn the starter switch to ON and press each auxiliary hydraulic switch several times to release the pressure from the auxiliary hydraulic circuit.**
- **Press the air breather button to relieve the tank pressure.**
- **When disconnecting hoses, stand to the side and loosen them slowly to gradually release the internal pressure before removing.**

These lines deliver the hydraulic oil necessary for operating a hydraulic breaker, crusher or other attachments.
(1).....First auxiliary hydraulic lines
(2).....Second auxiliary hydraulic lines
(3).....Third auxiliary hydraulic lines
(4).....Fourth auxiliary hydraulic lines

Stop valve
(S) : Close
(O) : Open

Connecting the hydraulic circuits
To connect the attachment hydraulic lines, observe the following procedures:
1. Release the pressure remaining in the lines, and then close the stop valve. Refer to “Releasing the residual pressure” on page 2-101.
2. Remove the plugs.
3. Connect the attachment hydraulic lines to ports (a/c) and (b/d). When installing a hydraulic breaker, connect the supply circuit to the port (a) and the return circuit to port (b).
4. Open the stop valves. When installing a hydraulic breaker, open the selector valve (1). Refer to “Selector valve” on page 2-103.
   Or, press the hydraulic breaker side (1) to release the line to the tank, if the auxiliary 1st auto tank switch is equipped. Refer to “Auxiliary 1st auto tank switch (option)” on page 2-58.
5. When connecting is complete, purge air from the hydraulic lines.
   a. Start the engine and run it at a low idle speed with no load for 10 minutes.
   b. With the engine running in low idle, operate the auxiliary hydraulic switches repeatedly (approx. 10 times) to purge air from the hydraulic lines.
   c. Stop the engine and wait for at least 5 minutes until bubbles escape from the hydraulic oil in the tank.

IMPORTANT: Follow the procedures for purging air as instructed by the attachment manufacturer, if applicable.

6. Check for oil leaks.

Disconnecting the hydraulic circuits
1. Release the pressure remaining in the lines, and then close the stop valve. Refer to “Releasing the residual pressure” on page 2-101.
2. Disconnect the lines from the ports (a/c) and (b/d).
3. Install the plugs.

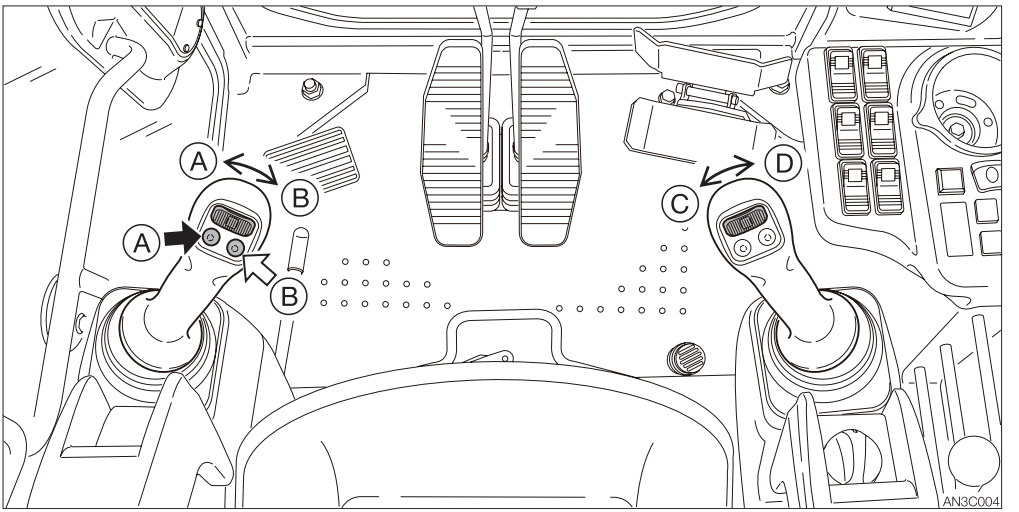

Operating

Press those buttons to control the flow of the oil in the first/second auxiliary hydraulic lines.

(A).....Hydraulic oil flows to left auxiliary line (a).

(B) .....Hydraulic oil flows to right auxiliary line (b).

(C) .....Hydraulic oil flows to left auxiliary line (c).

(D) .....Hydraulic oil flows to right auxiliary line (d).

Releasing the residual pressure

After the auxiliary hydraulic circuits have been used, pressure remains in the circuits. This is called the residual pressure. Release this residual pressure before disconnecting the lines.

Perform the residual pressure releasing within 30 minutes after the engine stopping.

1. Park the machine on a flat, rigid and safe ground.
2. Stop the engine.
3. Lower the safety lock lever to the unlocked position.
4. Turn the starter switch to the ON position.
5. Press the auxiliary hydraulic switches several times to release the residual pressure in the auxiliary hydraulic circuitry.

When not equipped with an accumulator

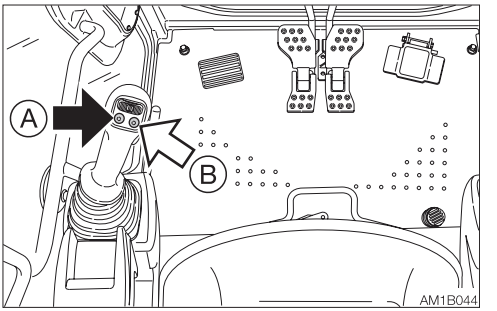

When the auxiliary 1st auto tank switch is equipped.

1. Start the engine and press the auxiliary button “B”.
   (The residual pressure is released from the port (a) line, and the internal pressure is generated in the port (b) line.)
2. Press the Auxiliary 1st auto tank switch to change to the one-way flow.
   (The residual pressure is released from the port (b) line.)
   Refer to “Auxiliary 1st auto tank switch (option)” on page 2-58.
3. Stop the engine.

When the auxiliary 1st auto tank switch is not equipped.

1. Start the engine and press the auxiliary button “B”.
   (The residual pressure is released from the port (a) line, and the internal pressure is generated in the port (b) line.)
2. Stop the engine and open the selector valve (1) on the machine body.
   (The residual pressure is released from the port (b) line.)

Selector valve

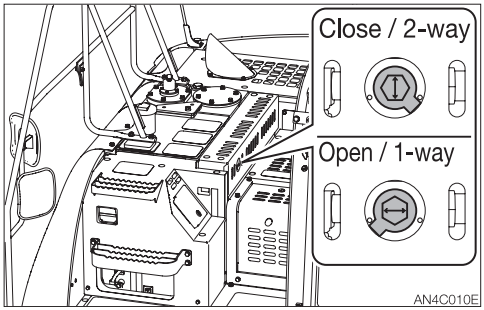

Open ..... When using a hydraulic breaker (1-way flow)
Close..... When using a reversible attachment (2-way flow)

Change the direction of the hydraulic oil flow by opening or closing the selector valve (1) on the machine body.
Use the high-flow only in the 2-way flow. If it is used in the one-way flow, the brake may overheat.
For the machine with the auxiliary 1st auto tank switch, use the switch to select the flow.
Refer to “Auxiliary 1st auto tank switch (option)” on page 2-58.

Third auxiliary hydraulic switch and button

IMPORTANT: The specifications of the third auxiliary service differ depending on the machine used (the pipe (e) is high- or low-pressure type). Install the attachment that meets the specifications. For details on the specifications of the third auxiliary service, contact your sales or service dealer.

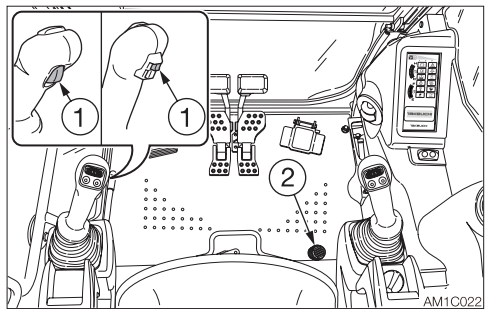

The third auxiliary hydraulic lines are normally used to control the “quick attachment” installed to connect/disconnect the bucket. When the safety lock lever is released after the engine is started, hydraulic oil flows into the pipe (e). This allows the pressure in the (e) side to increase and to prevent the pin inserted on the bucket from coming out. If the pressure in the (e) side drops, the alert that the bucket may come out is indicated by the warning lamp and the alarm. For a safety reason, the bucket can be disconnected only when the button (1) and the switch (2) are pressed at the same time. When they are pressed, the hydraulic oil flows into the line (f) to increase the pressure there. As the result, the pin on the bucket comes out and the bucket is removed from the machine.

- **Bleeder unit for simultaneous use with the auxiliary 1st and 2nd (If equipped)**
  Pressing both the auxiliary 3rd button (1) and the switch (2) makes it possible to release internal pressure from the auxiliary 3rd (e side), auxiliary 1st and auxiliary 2nd at the same time. (The pressure is kept drawn for six seconds after the button and the switch are released.) This enables faster attachment change.

Third auxiliary hard-lock switch (If equipped)

IMPORTANT: For handling of the attachment, follow the instructions provided in the attachment manual.

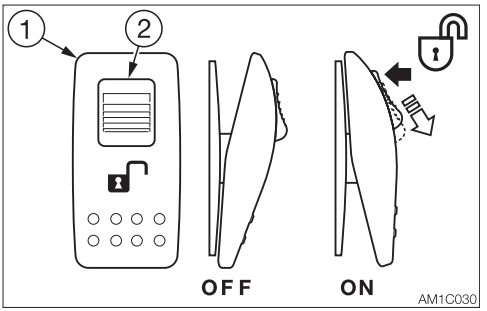

The third auxiliary hard-lock switch should be installed in the third auxiliary if the attachment to be installed on the piping of the third auxiliary is capable of hard locking.
When operating the third auxiliary, this switch is used.
The third auxiliary is mainly used to control the “quick attachment” that connects/ disconnects the bucket.
After the engine is started, hydraulic oil flows into the pipe (e) if the switch is off. This allows the pressure in the (e) side to increase, preventing the pin inserted into the bucket from coming off.
When the switch is turned on by pressing the switch (1) while pulling the orange portion (2), the warning lamp starts flashing. The hydraulic oil flows into the line (f) to increase the pressure there. As a result, the pin on the bucket comes off and the bucket is removed from the machine.

Third auxiliary hydraulic warning lamp

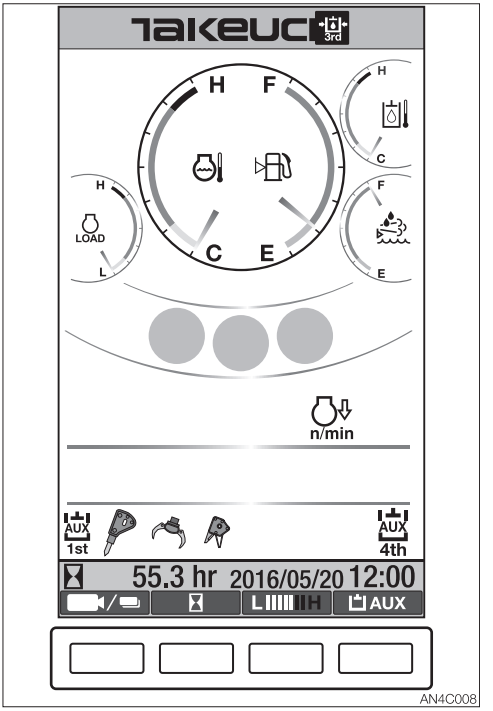

This lamp illuminates and an alarm sounds when the third auxiliary hydraulic pressure drops abnormally, when the safety lock lever is fully lowered to the unlocked position while the engine is running.

Auxiliary 2/4 select button

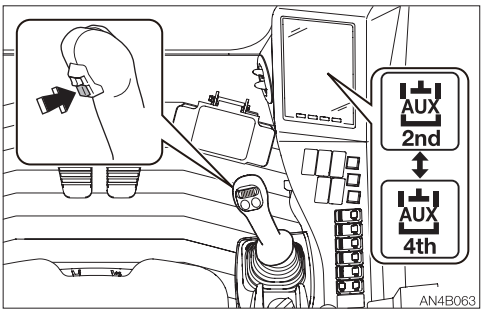

This button changes from the fourth auxiliary hydraulics operation to the second auxiliary hydraulics operation.
Press this button to change over to operation of the second auxiliary hydraulics. The second auxiliary hydraulics operation indicator lamp will light. Pressing this button one more time will return to the fourth auxiliary hydraulics operation. The actual operation is performed with the second/ fourth auxiliary hydraulic switch (slider switch).

Setting the flow rate and pressure
The flow rate and pressure in the auxiliary 1st, 2nd or 4th can be set to the desired values.
For details, refer to “Auxiliary 1st setting” on page 2-39 or “Auxiliary 2nd/4th setting” on page 2-40.

IMPORTANT: The set values are not the guaranteed values. They should be used as rough standards. For a precise setting, set the value while observing the measured pressure.

OPERATING THE MACHINE WITH AN ACCUMULATOR

⚠ WARNING

Be sure to handle the high-pressure nitrogen gas enclosed in the accumulator with care. If handled incorrectly, it could explode and cause serious injury. Strictly observe the following precautions:

- **Do not disassemble.**
- **Do not allow flame near or throw it into a fire.**
- **Do not drill, weld or fuse.**
- **Do not subject it to physical shock such as hitting, rolling or dropping.**
- **Before disposing of the unit, the sealed gas must be drained. Contact a Takeuchi service agent for help.**

For a machine with an accumulator, the residual pressure in the auxiliary hydraulic circuit or the working equipment circuit can be released even after the engine is stopped.

Releasing residual pressure

Residual pressure refers to the pressure that remains in the hydraulic circuit after the operation. Release the residual pressure as necessary by using the following steps. Perform the residual pressure releasing within 10 minutes after the engine stopping.

1. Return the throttle controller to idle the engine at low speed.
2. Lower the bucket and dozer blade to the ground.
3. Check that the safety lock lever is in the released position.
4. Stop the engine.
5. Turn the starter switch to the ON position.

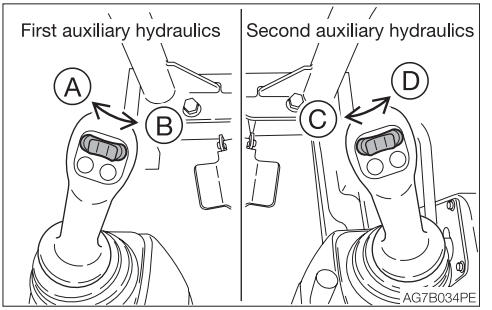

6. Move or press the auxiliary hydraulic switches several times to release the residual pressure in the circuitry.
7. Move all the control levers and pedals several times in all directions to release the pressure from the working equipment circuitry.
8. Raise the safety lock lever to engage the lock.

Lowering the boom when the engine has stopped

Perform this operation within 10 minutes after the engine stopping.

1. Sit at the operator's seat.
2. Turn the starter switch to the ON position.
3. Lower the safety lock lever to the unlock position
4. Slowly push the operating lever forward to lower the boom.

LIFTING SAFETY DEVICE

The lifting safety devices include an emergency shut-off valve and an overload warning device. The emergency shut-off valve prevents the boom or arm from falling. The overload warning device sounds an alarm when an excessive load is detected.

Emergency shut-off valve

The emergency shut-off valve prevents the boom or arm from falling rapidly.

⚠ WARNING

- **If the emergency shut-off valve is activated and the boom or arm falls, immediately move away from the load being lifted and go to a safe location.**
- **If the emergency shut-off valve hose breaks, immediately stop operation.**
- **Since the emergency shut-off valve (1) and (2) is a safety device, you must not disassemble it and/or replace or adjust its internal part. Takeuchi shall not be held responsible for any injuries, accidents or product malfunction caused by disassembly.**

Boom

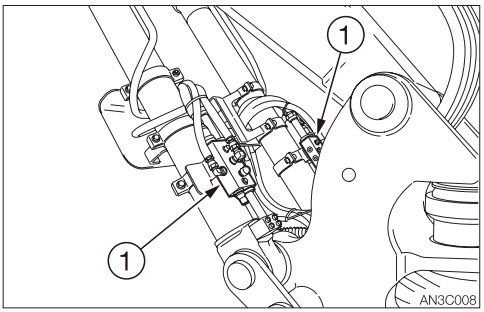

Arm (option)

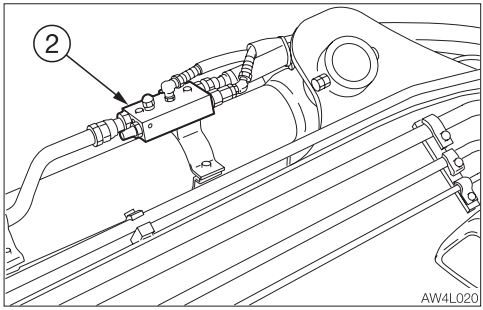

If the hose breaks and the emergency shut-off valve (1) or (2) is activated to stop the operation of boom or arm, lower the boom or arm by slowly operating the lever while ensuring safety. Ask your sales or service dealer for repair.

Overload warning device

If a weight greater than the lifting capacity is applied or lifted, the overload warning device is activated and the horn sounds. (When the lift overload warning switch is turned on.)

⚠ WARNING

If the overload is not removed after the overload warning horn is sounded, the machine may tip over or the emergency shut-off valve may be activated. If the horn starts sounding, stop operating the machine and lighten the load.

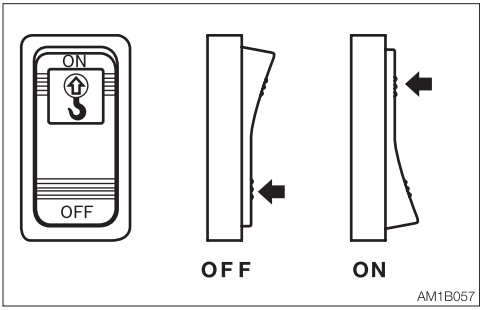

Lift overload warning switch
OFF ....Off
ON .....On

FUEL SUPPLY PUMP

This device automatically supplies fuel to the fuel tank and stops automatically when the fuel tank is full.

⚠ DANGER

Do not use the fuel supply pump for gasoline or hydraulic oil. Doing so could result in explosion or damage.
Only use the fuel supply pump for diesel fuel.

⚠ CAUTION

Do not fill the tank with additional fuel after the fuel supply pump stops.
Doing so could cause the fuel to spurt out.

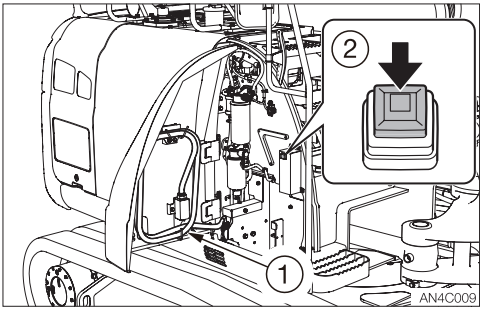

1. Open the front cover.
2. Insert the pump's nozzle (1) in the fuel supply tank.
3. Press the switch (2).
   The pump stops automatically once the fuel tank is full.

Note: To stop filling at a desired level, press the switch (2).

4. Store the nozzle.

USB PORT (IF EQUIPPED)

⚠ WARNING

- **Do not deform, disassemble, modify or short out the port. Doing so could cause heat generation, ignition or electric shock.**
- **Use only those electric devices that support this USB port. The rated output is 5 V/2.1 A.**
- **When using the port, be sure to insert the device/plug as far as it will go.**

⚠ CAUTION

- **The USB port is not waterproof when used as a power source. Keep the cap on when not in use.**
- **Be sure to connect the device/plug to the port with the correct sides. If forcibly inserted with the incorrect sides, the USB port could be damaged.**
- **Remove the device/plug from the USB port after use or when not in use. Otherwise it could cause fire or electric shock.**

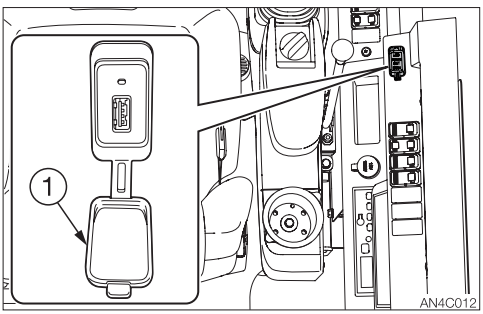

You can draw power from this USB port. To use, open the cap (1).

ENGINE AUTO STOP

⚠ WARNING

Do not leave the machine when the attachment is raised.

The term “engine auto stop” refers to a function that automatically stops the engine. When the engine auto stop function is on, the machine engine automatically stops to reduce fuel consumption, under the conditions listed below.
When the following conditions are met, the buzzer sounds and the engine stops in three minutes.

1. Safety lock lever is raised
2. Vehicle error code is not generated.
3. Engine error code is not generated.
4. Standstill regeneration is not being performed.
   Refer to “Standstill regeneration” on page 3-38.

For details about turning on or off this function, ask your sales or service dealer for help.

IMPORTANT: If the certain conditions are met when the engine auto stop is on, the buzzer sounds once every minute. The buzzer continues to sound once every minute even after the engine stops. Leaving the starter switch at the ON position will deplete the battery. Be sure to turn the switch to the OFF position after the engine is stopped.

Note: The engine auto stop does not function during the DPF auto regeneration.

MIRRORS

⚠ WARNING

Adjust the mirrors before operating the machine.
If the visibility is poor, death or serious injury could result.

The mirror can be adjusted by moving it by hand. If it is too hard to move by hand or too loose, use a tool to adjust it. Set the machine to the travel posture, and then adjust the mirrors by following the instructions in this manual.

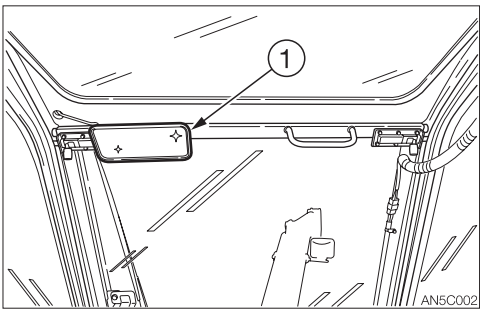

• Adjust the mirror (1) so that you can see the area behind the machine.

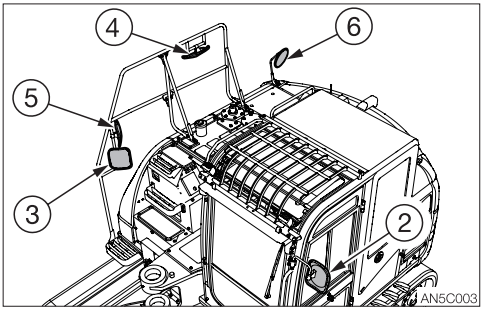

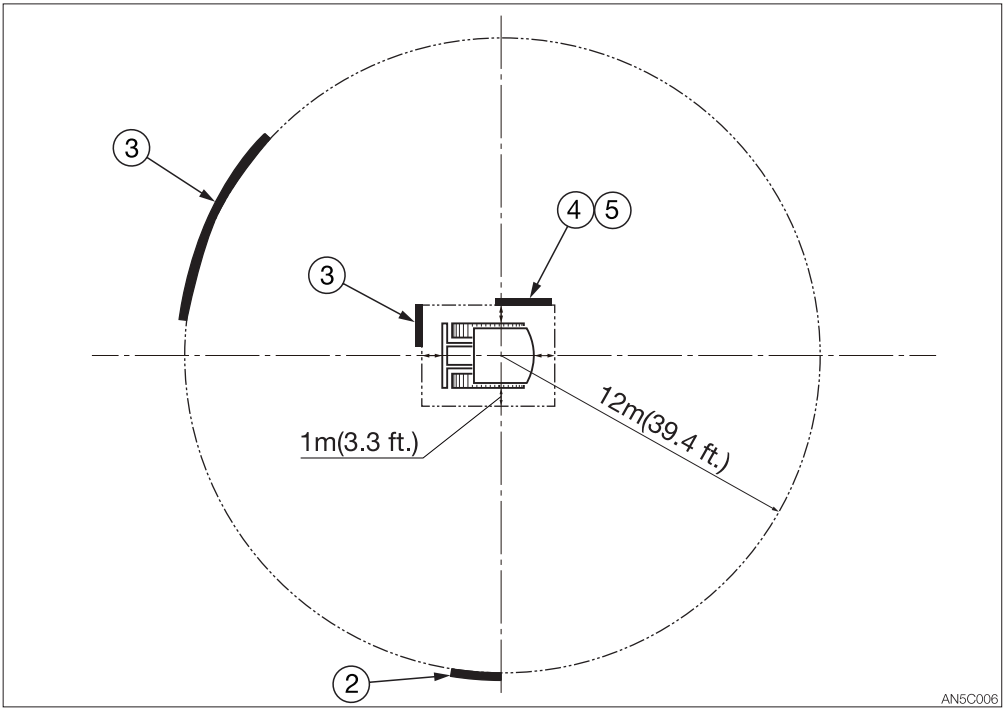

- Adjust the mirror (2) so that you can see the left side portion obstructed by the cabin, which is on the circumference of the 12-meter radius circle centered at the operator.
- Adjust the mirror (3) so that you can see the portions obstructed by the arm and boom: forward right portion on the circumference of the 12-meter radius circle centered at the operator and the forward right portion 1 meter (3.3 ft.) away from the machine.
- Adjust the mirrors (4) and (5) so that you can see the side portion obstructed by the machine, which is 1 meter (3.3 ft.) away from the machine.
- Adjust the mirror (6) so that you can see the area behind the crawlers.

REAR VIEW CAMERA AND SIDE VIEW CAMERA

⚠ WARNING

Adjust the cameras before operating the machine.
If the visibility is poor, death or serious injury could result.

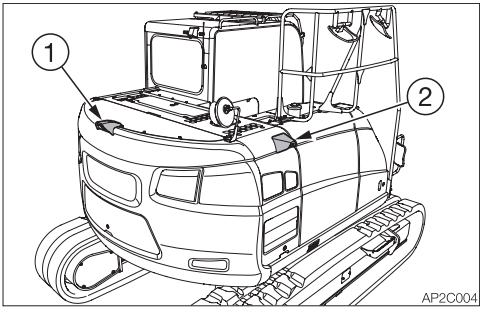

The images being taken by the cameras (1), (2) can be shown on the multi information display. While operating the machine, use the cameras (1), (2) to check the blind spots from the operator's seat.
Refer to "Camera image" on pages 2-47 to 2-48.
If the images are not correctly displayed, adjust the camera installation angle.

Adjusting the installation angle

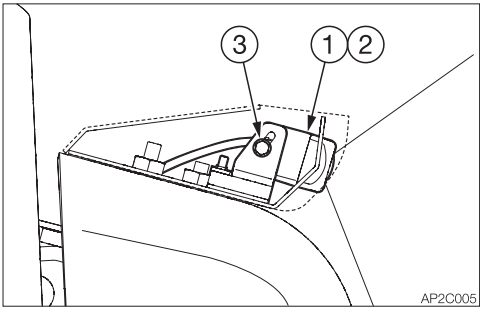

1. Loosen the right and left bolts (3) securing the cameras (1), (2).

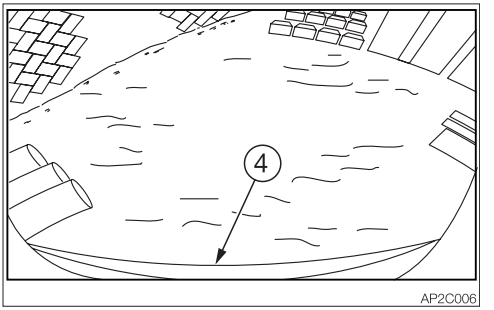

2. Adjust the angle while checking the screen so that the portion (4) of the machine can be displayed.
3. Tighten the right and left bolts (3) evenly.
   · Tightening torque: 0.5 N·m (0.4 ft-lb.)

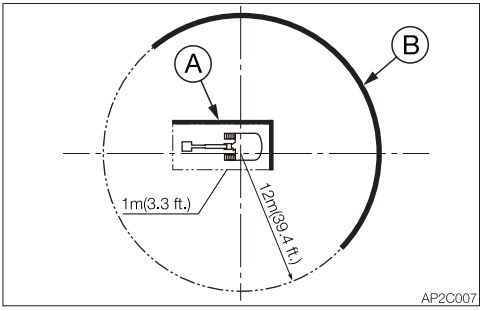

4. Check if the images are shown on the multi-information display.
   A: The blind spot area, 1 meter (3.3 ft.) away from the machine.
   B: The blind spot area, on the circumference of the 12-meter (39.4 ft.) radius circle centered at the operator
   If the blind spot area A or B is not shown after adjustment, contact your service or sales dealer for assistance.

270-DEGREE VIEW CAMERA SYSTEM (IF EQUIPPED)

⚠ WARNING

Adjust the cameras before operating the machine.
If the visibility is poor, death or serious injury could result.

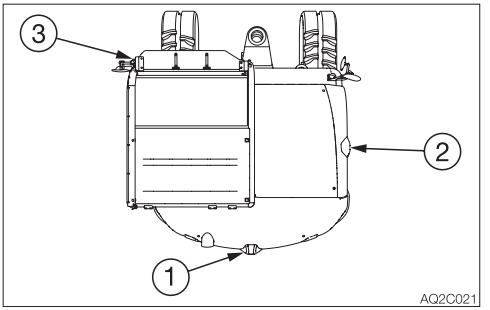

The images being taken by the cameras (1), (2) and (3) can be shown on the multiinformation display. While operating the machine, use the cameras (1), (2) and (3) to check the blind spots from the operator's seat.
Refer to "Camera image" on page 2-48.
If the images are not correctly displayed, adjust the camera installation angle.

Adjusting the installation angle

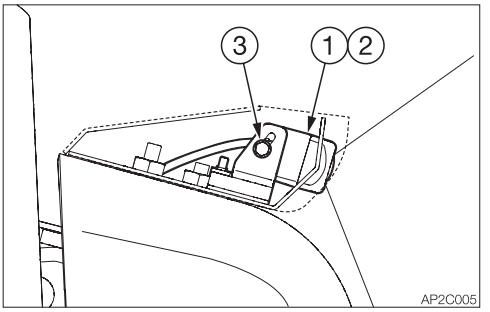

1. Loosen the right and left bolts (3) securing the cameras (1), (2).
2. Adjust the angle while checking the screen.
3. Tighten the right and left bolts (3) evenly.
   · Tightening torque: 0.5 N·m (0.4 ft-lb.)

AUTO CAMERA MODE

When the machine starts traveling, the display is automatically switched to the camera screen. When the machine stops traveling, the display returns to the Home screen.
This function can be manually turned on or off. For setting the auto camera mode, refer to "ON/OFF setting" on page 2-44.

OPERATION



BEFORE STARTING OPERATION

GETTING ON OR OFF THE MACHINE

⚠ WARNING

- **Do not jump on or down from the machine. Never attempt to get on or off the moving machine.**
- **When getting on or off the cab, first fully open the door to the locked position and check that it does not move.**

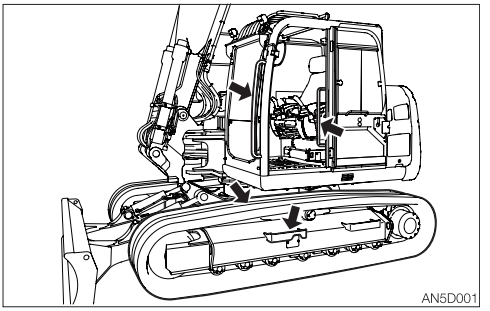

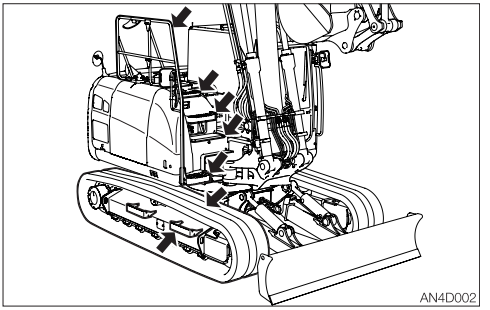

- **Climb up/down the steps holding the handrail to support your weight in a three point secure stance (hand and feet).**
- **Never use the safety lock lever or control levers as hand holds.**

WALK-AROUND INSPECTION

Perform the walk-around inspections once a day before starting the engine for the first time that day.
Refer to “MAINTENANCE, Walk-around inspection”, on pages 5-20 and 5-21.

DAILY INSPECTION

Perform the daily inspections once a day before starting the engine for the first time.
Refer to “MAINTENANCE, Daily inspection”, on pages 5-22 to 5-35.

STARTING AND STOPPING THE ENGINE

BEFORE STARTING THE ENGINE

1. Adjust the seat for a comfortable operating position.
2. Fasten the seat belt.

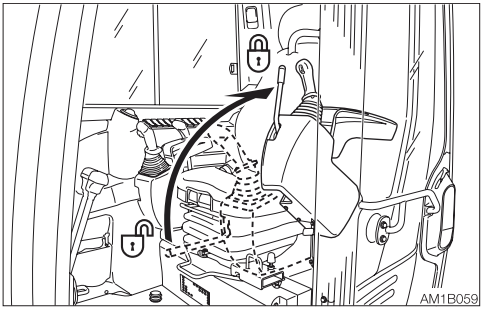

3. Check that the safety lock lever is in the locked position.

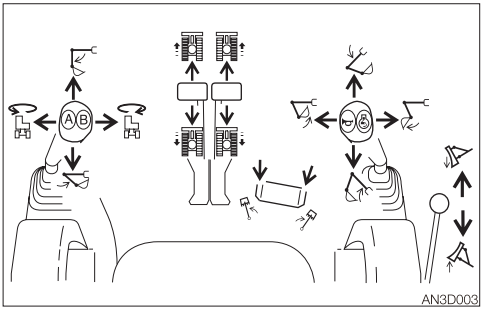

4. Check that all levers and pedals are in the neutral position.

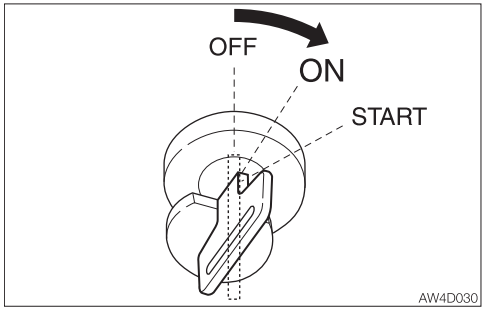

5. Insert the key into the starter switch, turn it to the ON position, then perform the following inspections:

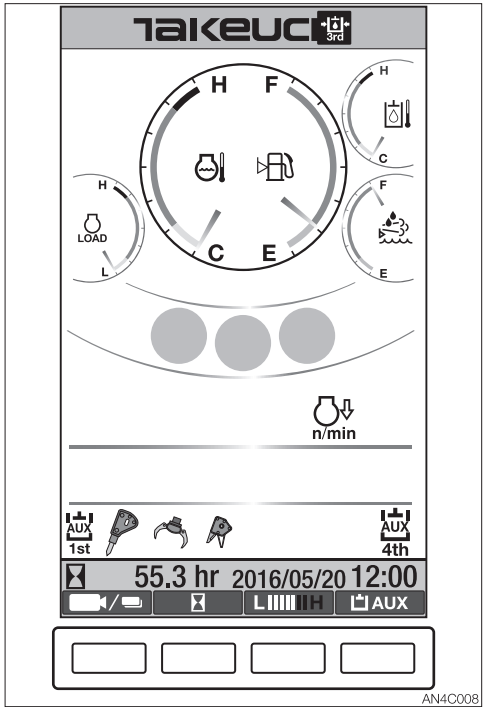

- The “TAKEUCHI” logo appears, followed by the Home screen. All lamps except the deceleration lamp are off. If the auxiliary 3rd is equipped, the third auxiliary hydraulic warning lamp also lights up.

- Turn on the light switch to check if the boom light, front light, side lights, tail lamps and meter light turn on.
- Check the fuel level.
- Check the DEF/AdBlue® level.

STARTING THE ENGINE

⚠ WARNING

- **Clear all personnel from the work area.**
- **Sound the horn to warn people around the machine.**

IMPORTANT: Do not run the starter motor for more than 20 consecutive seconds. If the engine fails to start, wait for 1 minute, and then try again to start.
IMPORTANT: If the engine stalls due to fuel shortage, add fuel, turn the key to the ON position for 60 seconds, and then turn it to the START position. Running the starter for a long time before there is enough fuel is going through can cause the starter to fail.
IMPORTANT: If the error lamp lights up to indicate that the engine has failed to start, the electronic controller on the engine initiates the start lock to protect the engine.
To cancel the start lock, leave the key in the OFF positon for approximately two minutes.

Normal starting

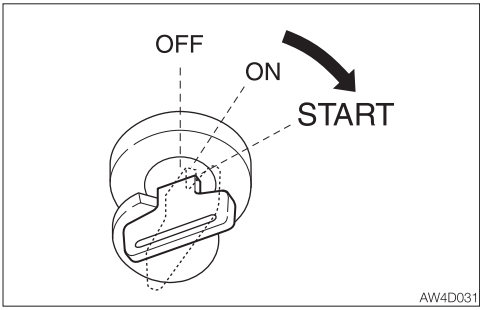

1. Turn the key to the START position and start the engine.
   The engine does not start unless the safety lock lever is in the locked position at this point.
2. Once the engine starts, release the key.
   The key automatically returns to the ON position.
3. Check that the warning lamps are off.
   For safety reasons, it is designed that the deceleration function is activated to set the engine revolutions to low idling whenever the engine is started.
   Cancel the deceleration mode by pressing the deceleration button as necessary.
4. Warm up the engine.
   Refer to “Warming up the engine” on page 3-6.
5. After the completion of the warming up, press the deceleration button to cancel the deceleration mode.

Starting in cold climates

⚠ WARNING

- **Never use starting fluid on this engine, as the starting fluid could cause an explosion.**
- **If the engine does not start properly despite of the normal operation of the starting aids such as a glow plug, stop the starting operation by turning the starter key to the OFF position.**

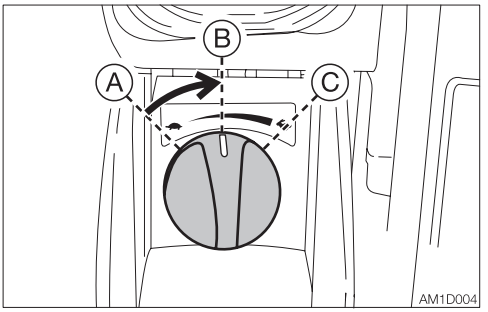

1. Turn the throttle controller to the middle position.

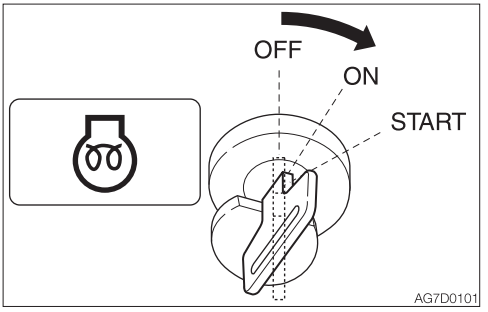

2. Turn the starter key to the ON position, and confirm that the glow lamp is lit.
3. After the glow lamp goes out, press the deceleration button (to cancel the deceleration mode), and then turn the key to the START position to start the engine. The engine does not start unless the safety lock lever is in the locked position at this point.
4. Once the engine starts, release the key. The key automatically returns to the ON position.
5. Check that the warning lamps are off.
6. Return the throttle controller to the original position and warm up the engine. Refer to “Warming up the engine”.

WARMING UP THE ENGINE

IMPORTANT: Do not accelerate the engine and run it without load until the engine warm up is complete.
Do not warm up the engine for a long time (20 minutes or more). When idling is required, occasionally place a load or run the engine at medium speed.

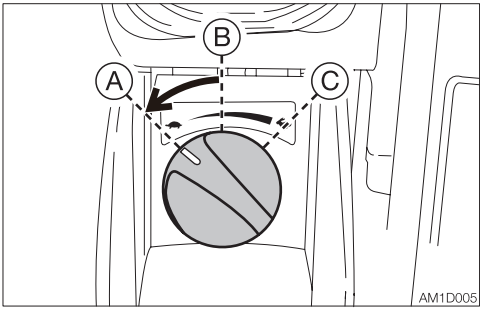

1. Return the throttle controller, and then run at a low idle with no load for 10 minutes.

STOPPING THE ENGINE

IMPORTANT: Do not stop the engine suddenly when operating with heavy loads or at the maximum speed. Doing so may cause the engine to overheat or seize. Never stop running the engine suddenly except in emergency.
IMPORTANT: The SCR system operates for up to 2 minutes after the starter switch is turned to the OFF position.
When removing the batteries or electrical connectors for inspection or maintenance, wait for at least 2 minutes after the starter switch is turned to the OFF position. Otherwise, the system could fail.

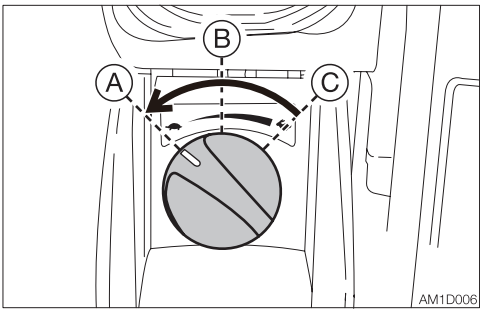

1. Return the throttle controller.
2. Idle the engine for about 1 minutes to gradually let it cool.

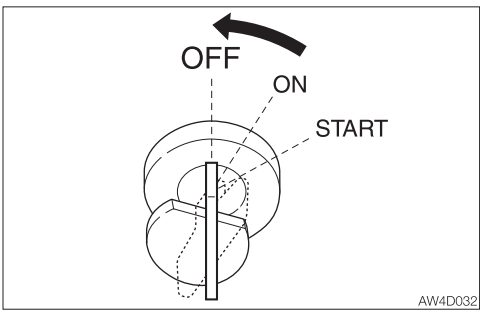

3. Turn the starter key to the OFF position to stop the engine.

MEMO

OPERATING THE MACHINE

LEVER PATTERN (ISO PATTERN)

⚠ WARNING

- Before starting operation, carefully check which lever pattern you are going to use.
- It is described using the ISO pattern in this manual.

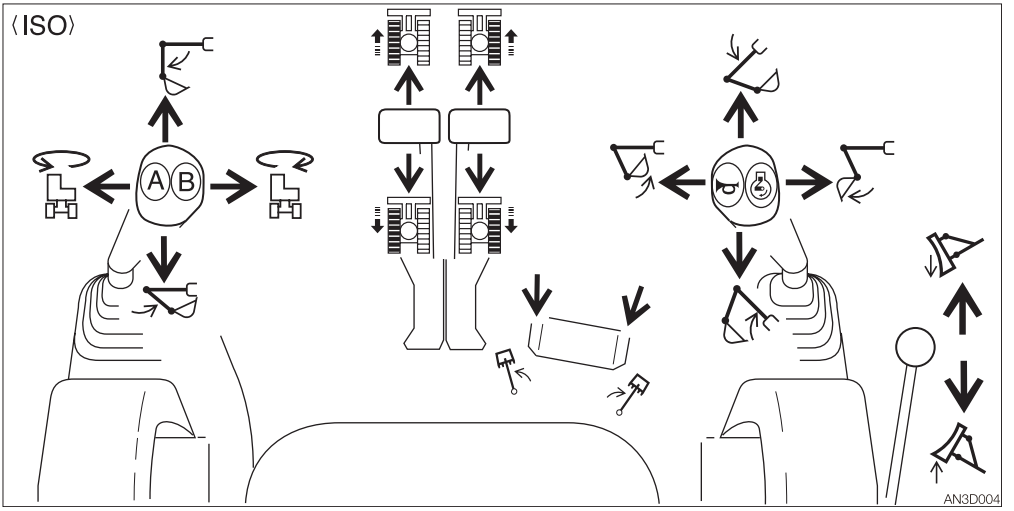

	Left crawler forward		Right crawler forward
	Left crawler reverse		Right crawler reverse
	Arm out		Boom lower
	Arm in		Boom raise
	Upperstructure slew left		Bucket load
	Upperstructure slew right		Bucket dump
	Boom swing left		Dozer blade lower
	Boom swing right		Dozer blade raise

LEVER PATTERN (G PATTERN) (IF EQUIPPED)

⚠ WARNING

- Before starting operation, carefully check which lever pattern you are going to use.
- It is described using the ISO pattern in this manual.

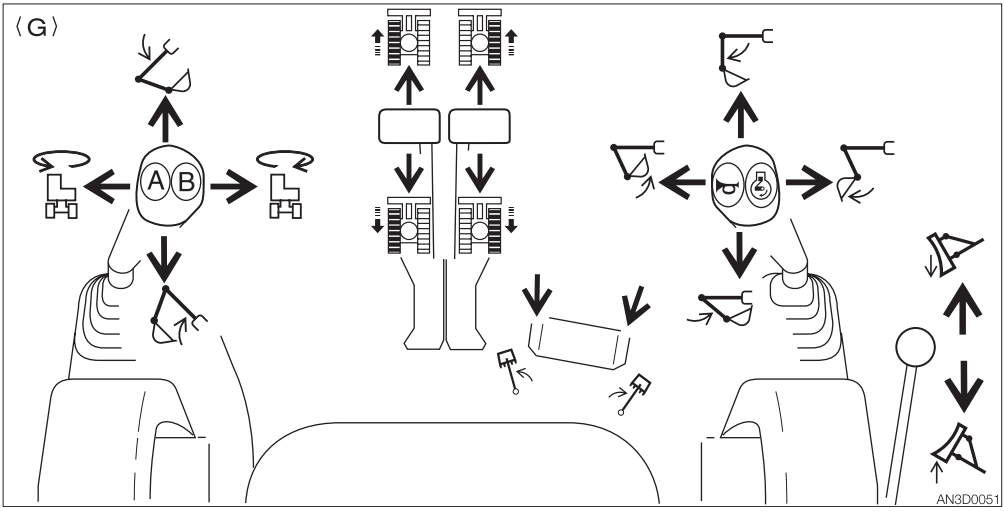

	Left crawler forward		Right crawler forward
	Left crawler reverse		Right crawler reverse
	Boom lower		Arm out
	Boom raise		Arm in
	Upperstructure slew left		Bucket load
	Upperstructure slew right		Bucket dump
	Boom swing left		Dozer blade lower
	Boom swing right		Dozer blade raise

WARMING UP THE MACHINE (HYDRAULIC OIL)

⚠ WARNING

Operating the working equipment without warming up the machine (hydraulic oil) is dangerous, as the working equipment cannot response to controls quickly or may move in unexpected ways, and the safety devices may not operate properly. Be sure to sufficiently warm up the machine.

IMPORTANT: Do not operate the levers too quickly when the hydraulic oil temperature is below 20°C (68°F). The proper hydraulic oil temperature during operation is 50 to 80°C (122 to 176°F). If operations must be performed at lower temperatures, heat up the hydraulic oil to at least 20°C (68°F).

Normal warm-up

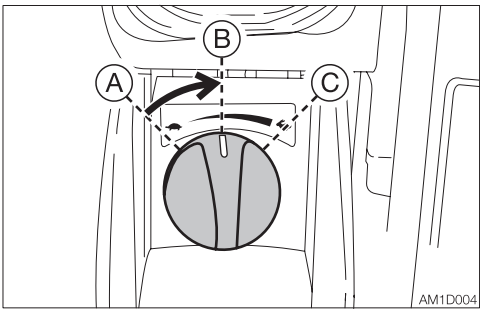

1. Turn the throttle controller to the middle position, and then run the engine at medium speed for about five minutes with no load.

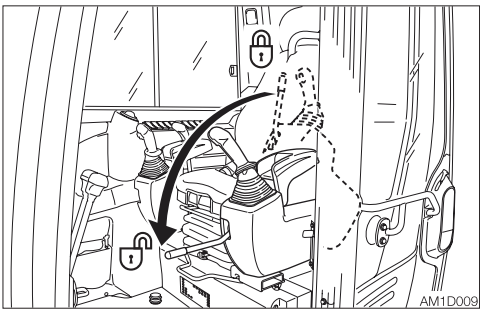

2. Fully lower the safety lock lever to disengage the lock and lift the bucket from the ground.

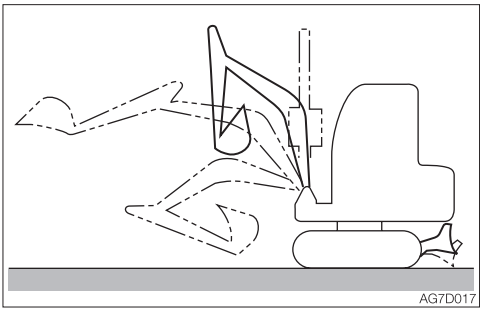

3. Extend and retract each of the cylinders slowly several times with no load.

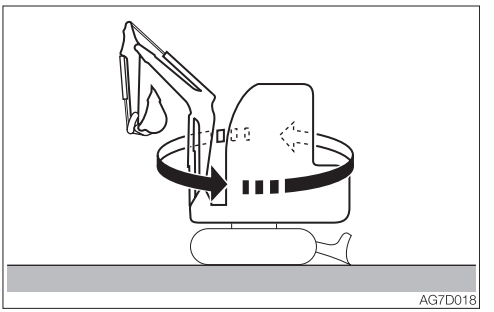

4. Slew slowly to the left and the right several times.

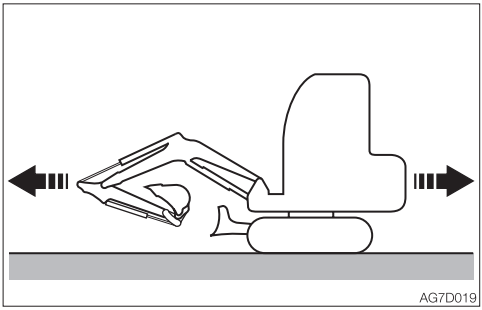

5. Travel slowly forward and in reverse several times.

Warm-up in cold climates

1. Perform the normal warm-up procedure.

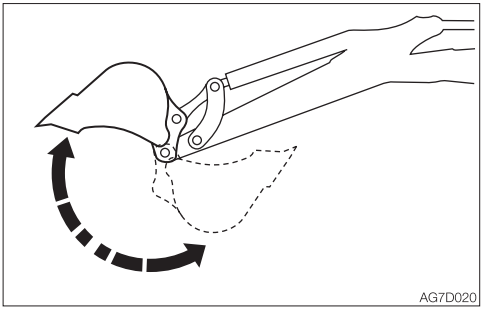

2. Set the bucket cylinder at the stroke end and keep it there.
   Do not keep this condition for more than 30 seconds.
3. Repeat Step 2 until the bucket operating speed becomes normal.

INSPECTION AFTER WARM-UP

After warming up the engine and machine (hydraulic oil), perform the checks and inspections described below, and repair if necessary.

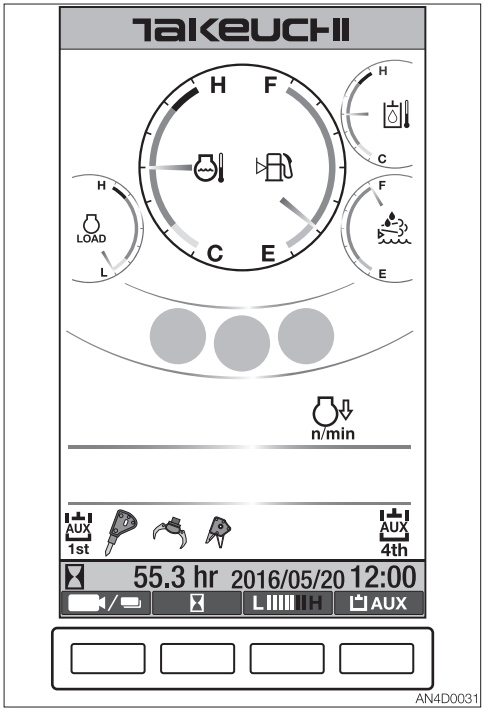

1. Check that the warning lamps and meters are as follows:
   - Are all warning lamps off?
   - Is the LED on the water temperature gauge seen within the green range?
   - Is the LED on the hydraulic oil temperature gauge seen within the green range?
2. Check that there are no irregularities in the exhaust color, sound and vibrations.

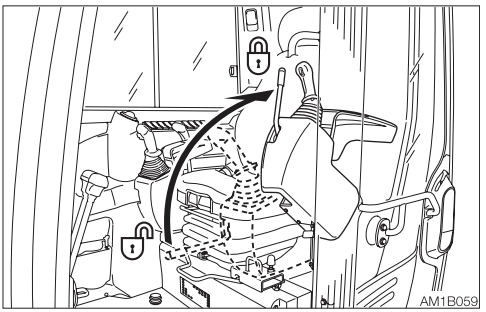

3. Raise the safety lock lever to the locked position, and then check that the operating and travel levers are locked.

OPERATING THE TRAVEL LEVERS/ PEDALS

⚠ WARNING

- **Never allow anyone to enter the machine's slewing radius and path.**
- **Signal your intention to move by sounding the horn.**
- **There is a blind spot in the rear of the machine. Before traveling in reverse, as necessary, swing the cab around in reverse to check that the area is safe and clear.**

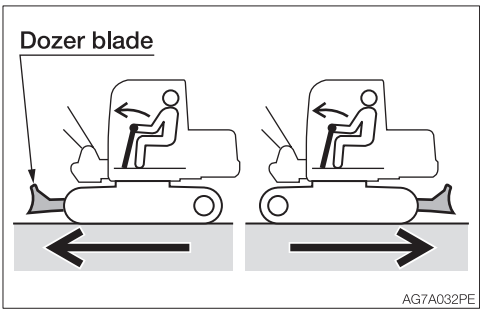

- **Before operating the travel levers/ pedals, make sure that the dozer blade is to the front of the operator's seat. Remember that when the dozer blade is to the rear of the operator's seat, the travel levers/pedals must be operated in the reverse direction from when it is to the front.**
- **Clear all obstacles from the path of the machine.**

Moving the machine forward and backward

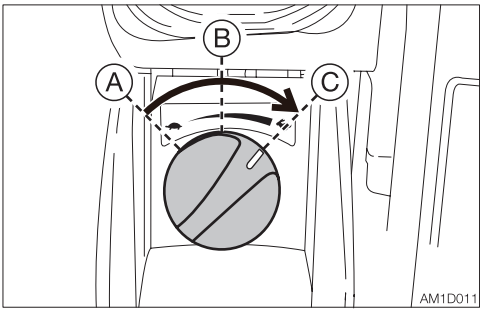

1. Turn the throttle controller and increase the engine speed.

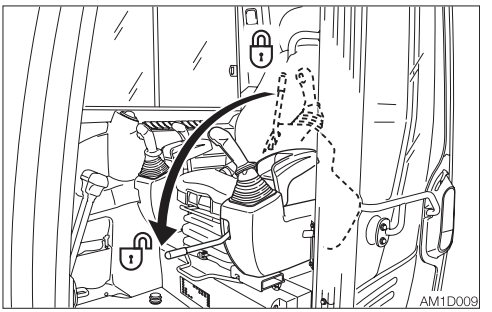

2. Fully lower the safety lock lever to disengage the lock.

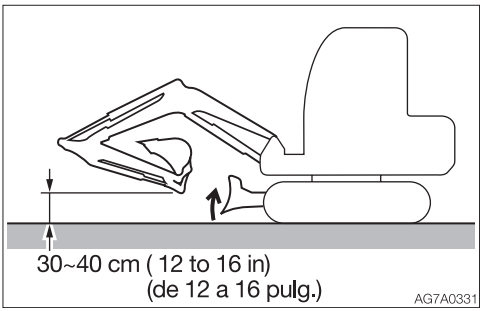

3. Fold the hoe attachment and lower it 30 to 40 cm (12 to 16 in.) above the ground.
4. Lift the dozer blade.
5. Operate the left and right travel levers as below.

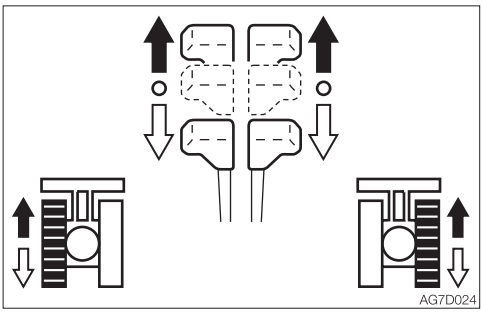

When the dozer blade is in front of the operator's seat:

➡ To move forward:
Tilt the levers forward.

⇨ To move backward:
Tilt the levers backward.

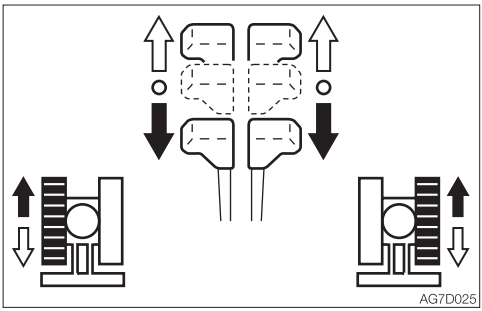

When the dozer blade is behind the operator's seat:

➡ To move forward:
Tilt the levers backward.

⇨ To move backward:
Tilt the levers forward.

Traveling in 2nd (High) speed

⚠ WARNING

When a load greater than a set value is applied during traveling in 2nd (high) speed, the speed will automatically slow down to 1st (low) speed. When the load becomes lighter, the speed will increase and return to 2nd (high) speed. It should be noted that the travel speed changes depending on the load condition (for machines with the automatic travel shift-down system).

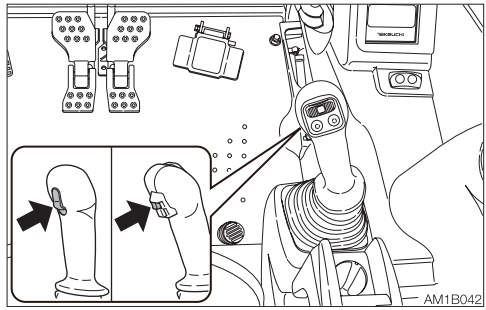

Press the travel speed switch to set to the 2nd (high) speed, and press it again to return to the 1st (low) speed.

Pivot turn

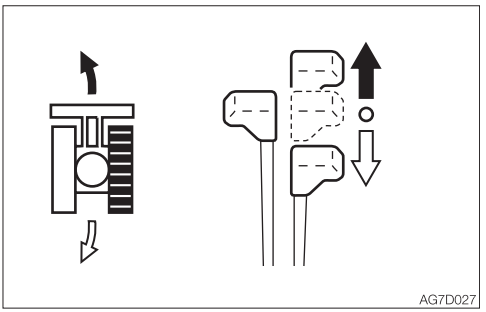

Turning to the left when stopped:

➡ To turn forward to the left:
Tilt the right lever forward.

⇨ To turn backward to the left:
Tilt the right lever backward.

To turn to the right, operate the left lever in the same way as for the right lever.

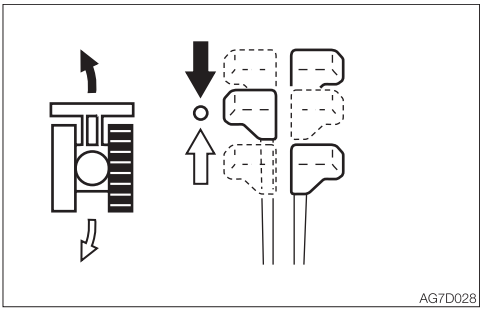

Turning to the left while traveling:

➡ To turn left while traveling forward:
Set the left lever to neutral.

⇨ To turn left while traveling backward:
Set the left lever to neutral.

To turn to the right while traveling, operate the right lever in the same way as for the left lever.

Spin turn

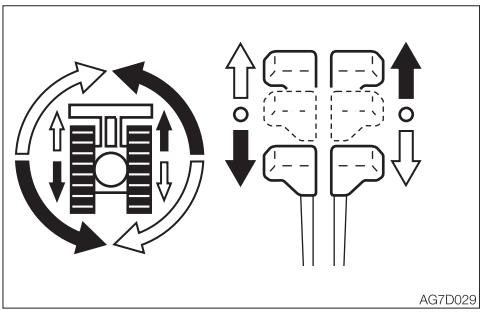

➡ To spin left:
Tilt the left lever backward and the right lever forward.

⇨ To spin right:
Tilt the right lever backward and the left lever forward.

STOPPING TRAVEL

⚠ WARNING

- Park the machine on a flat, rigid and safe ground. Set the parking brake. If you must park on a slope, chock the tracks to block the machine.
- If any control is accidentally touched when the safety lock lever is not locked, the machine may suddenly move and cause serious injury or death.

⚠ CAUTION

Never stop running the machine suddenly except in emergency. Stop in good time, if possible.

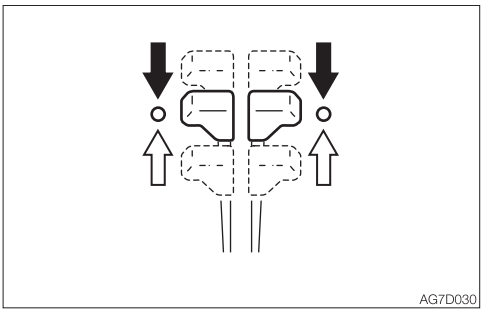

1. Set the left and right travel levers slowly to the neutral position. The machine stops.

OPERATING THE WORKING EQUIPMENT

⚠ WARNING

- **Before starting operation, carefully check which lever pattern you are going to use.**
- **It is described using the ISO pattern in this manual.**

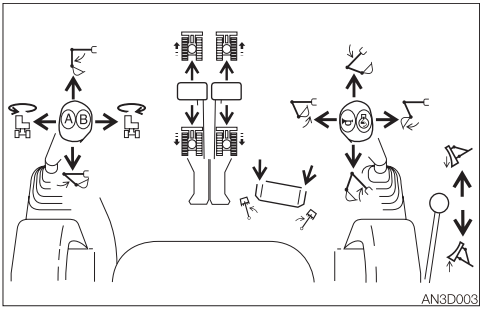

Use the right operating lever to operate the boom and bucket.
Use the left operating lever to operate the arm and slewing.
Return the operating levers to the neutral position to stop the hoe attachments.

1. Lower the safety lock lever to the unlocked position.
2. Set the pedal cover to the unlocked position.

Slewing

⚠ WARNING

Check the surrounding area for safety before slewing.

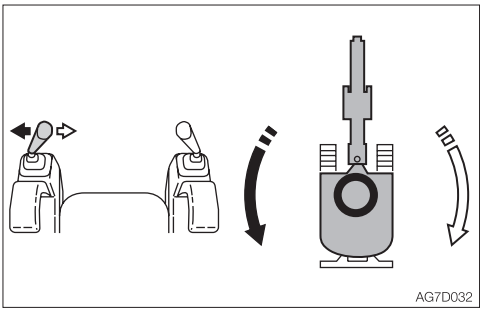

➡ Upperstructure slew left:
Tilt the left operating lever to the left.
⇨ Upperstructure slew right:
Tilt the left operating lever to the right.

Operating the boom

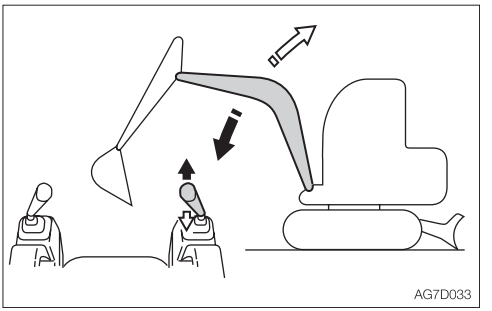

➡ Boom lower:
Tilt the right operating lever forward.
⇨ Boom raise:
Tilt the right operating lever backward.

Operating the arm

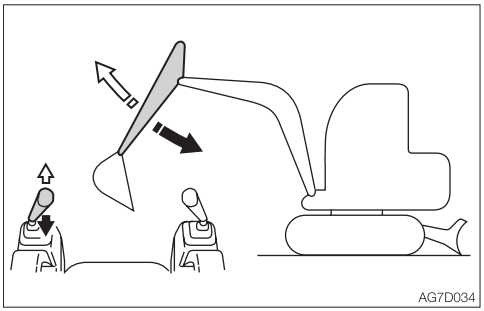

➡ Arm in:
Tilt the left operating lever backward.

⇨ Arm out:
Tilt the left operating lever forward.

Operating the boom swing

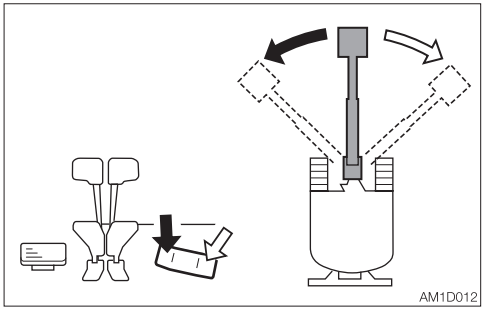

➡ Boom swing left:
Step on the left side of the pedal.

⇨ Boom swing right:
Step on the right side of the pedal.

Operating the bucket

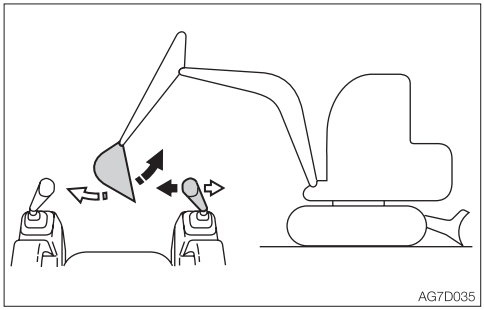

➡ Bucket load:
Tilt the right operating lever to the left.

⇨ Bucket dump:
Tilt the right operating lever to the right.

Operating the dozer blade

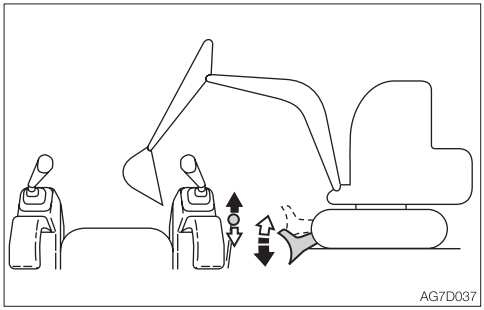

➡ Dozer blade lower:
Tilt the lever forward.

⇨ Dozer blade raise:
Tilt the lever backward.

OPERATING PROCEDURES

PROHIBITED OPERATIONS

⚠ WARNING

- **Do not operate on bedrock (hard or soft).**
- **Do not slew/swing while traveling. If you must operate the hoe attachment while traveling, operate at speeds slow enough so you have complete control at all times.**

Do not perform demolition or leveling using slew force

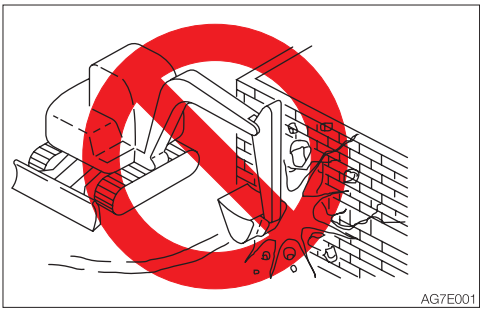

Do not demolish walls or level ground using slew force. Also, do not dig the bucket teeth into the ground during slewing. Doing so will damage the hoe attachment.

Do not dig while traveling

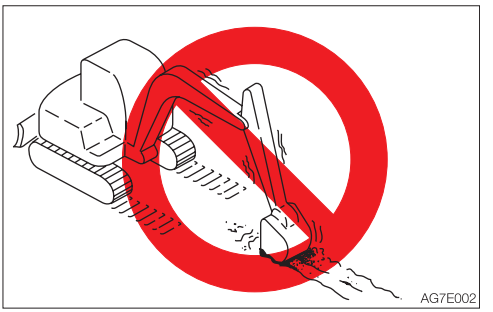

Do not dig the bucket into the ground and use the traveling force to dig.

Be gentle when using the hydraulic cylinder

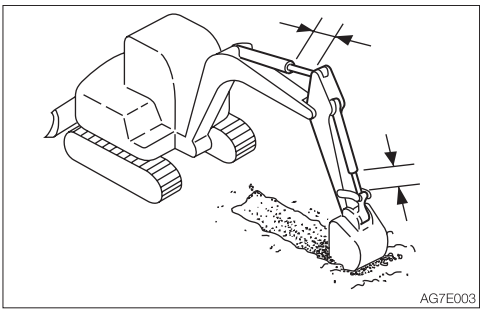

Do not extend the hydraulic cylinders to the stroke ends. Operate them with leeway.

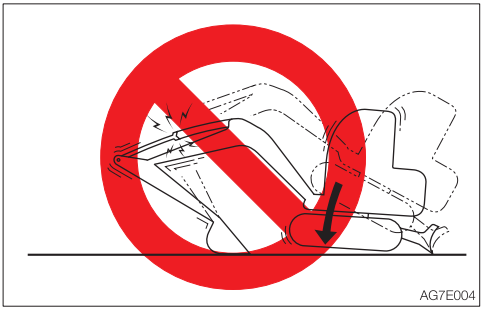

Do not support the machine body with the hoe attachment when the body is lowering with the arm cylinder fully extended. Doing so concentrates the load on the arm cylinder and could damage the arm cylinder.

Do not drive piles with the bucket or dig by banging the bucket

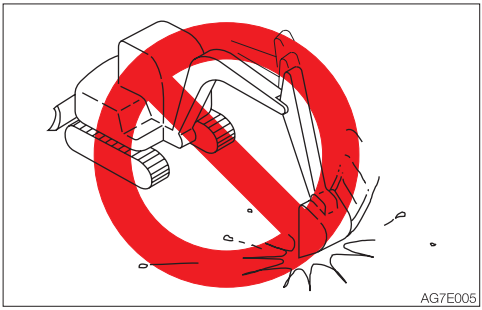

Doing so will shorten the service life of the hoe attachment. Use the hydraulic force to dig.

Do not perform operations using the machine's dropping force



Putting excessive strain on the machine will shorten its service life. When digging, use the hydraulic force of the cylinders and the shallow and long strokes.

Digging bedrock

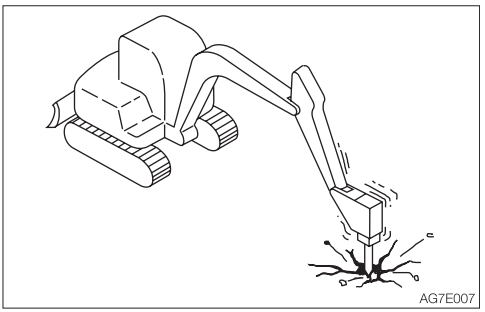

For hard base rock, break the rock up into small pieces with a breaker, etc., before digging. This prevents damage to the machine and is thus more economical in the end.

Caution on exposing the dozer blade to shocks

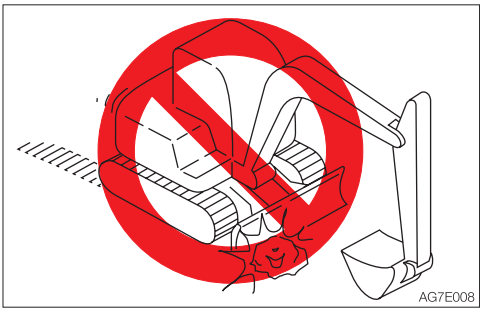

Hitting the dozer blade against rocks, etc., could damage the dozer blade or the blade cylinder.

Caution on folding the hoe attachment

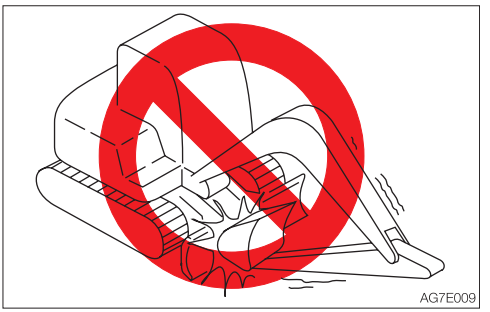

Be careful not to let the bucket to hit the dozer blade when the hoe attachment is being folded.

Do not use the dozer blade as an outrigger

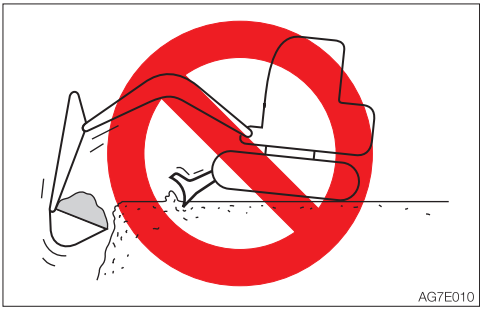

Pay attention to the dozer blade when digging

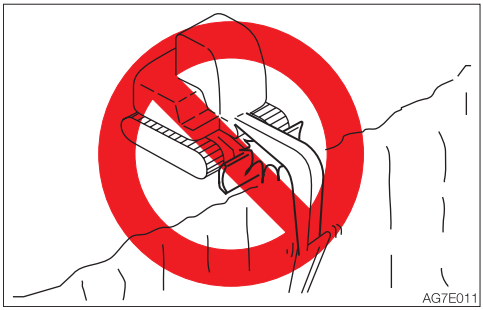

When digging deeply with the dozer blade positioned at the front, be careful that the boom cylinder and bucket do not hit the dozer blade.
Operate with the dozer blade at the rear whenever possible.

Caution on digging down with the dozer blade

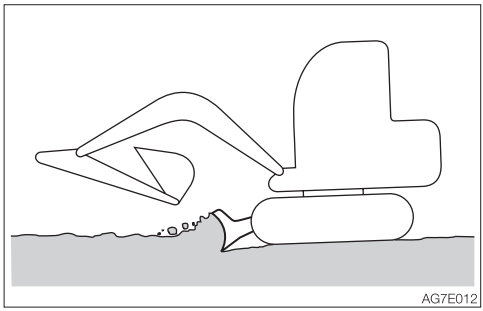

This dozer blade is designed for simple earth pushing. Do not dig down deeply with the dozer blade. Doing so could damage the dozer blade and undercarriage.

CAUTIONS ON OPERATING

Cautions on traveling

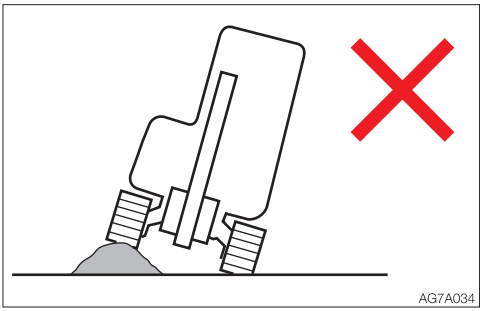

Traveling over obstacles (rocks, stumps, etc.) may put a great load on the machine body and may cause damage to it. Avoid crossing over obstacles whenever possible. If you must do so, keep the hoe attachment near the ground, travel at a low speed, and go over the obstacle at the center of the crawler.

Cautions on traveling in 2nd (High) speed

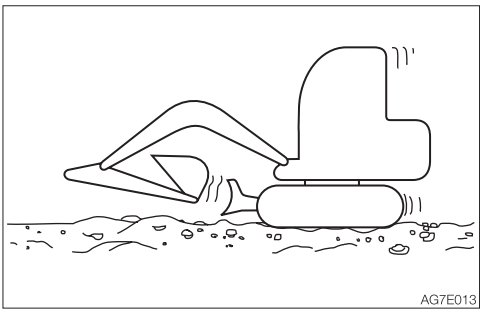

- On uneven ground, maintain the low speed and avoid starting, stopping or changing directions abruptly.
- When a load greater than a set value is applied during traveling in 2nd (high) speed, the speed will automatically slow down to 1st (low) speed. When the load becomes lighter, the speed will increase and return to 2nd (high) speed. It should be noted that the travel speed changes depending on the load condition (for machines with the automatic travel shift-down system).
- When traveling in 2nd speed, do so with the dozer blade at the front.

Cautions on using machine in water

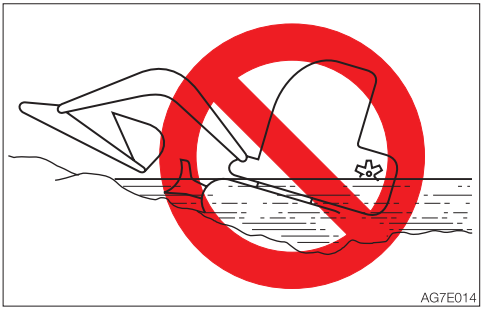

If the rear of the machine is submerged in water as shown in the figure above, it causes the radiator fan to turn in water, resulting in damage to the fan. The rear of the machine must not be submerged.

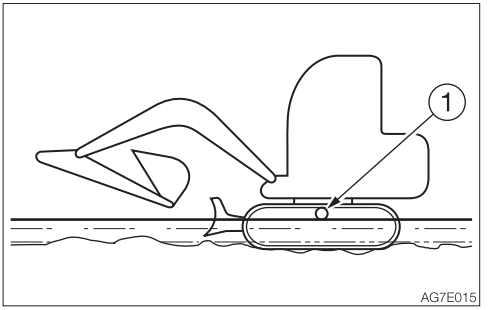

- Allowable water depth
  Use the machine in water only when the water is up to the bottom of the carrier roller (1).
- For those parts used in water for a long time, apply enough grease until the old grease is expelled.
- Never submerge the slew bearing or main body in water or sand. If submerged, contact a Takeuchi service agent for inspection.

CAUTIONS ON TRAVELING ON SLOPES

⚠ WARNING

- Never travel on slopes that are too steep for the machine to maintain its stability. (maximum gradeability: 35°, lateral tipping angle: 15°) Note that in reality, the machine's stability becomes lower than the above values depending on the working condition.
- When traveling on slopes, lower the bucket to a height of 20 to 30 cm (8 to 12 in.) above the ground. When climbing a steep slope, extend the hoe attachment to the front. In emergencies, lower the bucket to the ground and stop the machine.
- When traveling on slopes or grades, drive slowly in 1st (low) speed.
- When climbing a hill, keep the operator's seat facing the hillside. When descending a hill, keep the operator's seat facing the downhill direction. In either case, travel must be done while paying attention to the ground in front of the machine.
- Do not descend slopes in reverse.

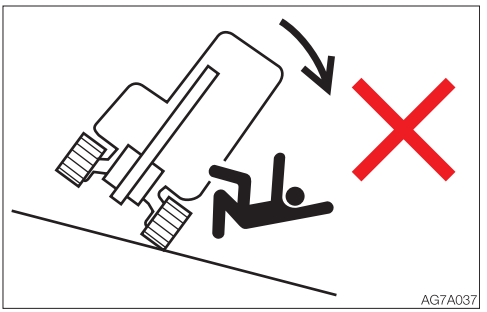

- Do not change directions on slopes or traverse slopes. First return to a flat surface, and then take an alternative path.
- The machine may slip sideways even on a slight slope if they are covered with grass or dead leaves, or when traveling on a wet metal plate or frozen surfaces. Do not allow the machine to position sideways to slopes.

Traveling posture on slopes
Climbing slopes

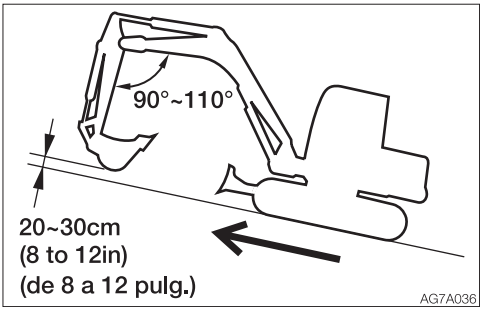

When climbing slopes of 15° or more, maintain the machine posture as shown in the figure above.

Descending slopes

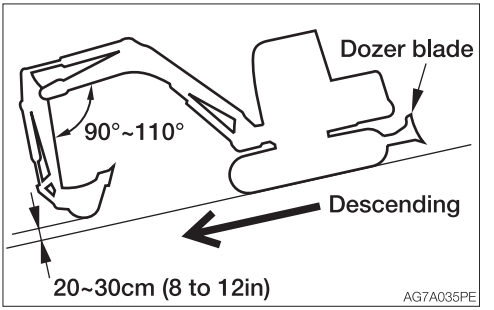

When descending slopes of 15° or more, slow down the engine speed and maintain the machine posture as shown in the figure above.

Braking when descending slopes

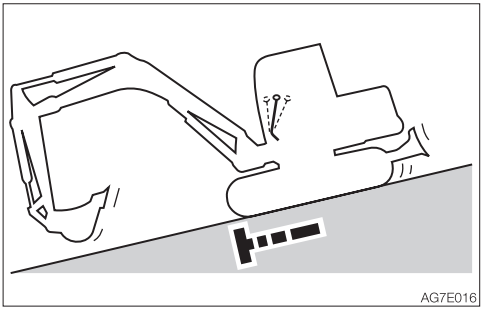

When descending slopes, the brakes are applied automatically once the travel levers are returned to the neutral position.

If the crawler slips

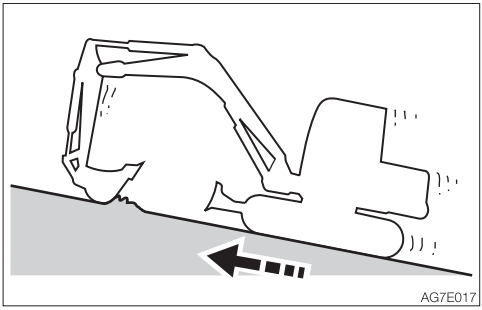

If the crawler slips while climbing a slope and impossible to travel, use the pulling force of the arm to climb the slope.

If the engine stops

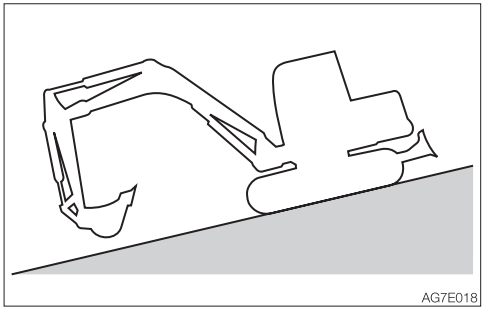

If the engine stops when descending a slope, set the travel levers to the neutral position, stop the machine, then start the engine.

Do not open the door while traveling on slopes



Opening the door while traveling on slopes is dangerous, as the force required to open and close the door changes abruptly. Always keep the door closed when traveling on slopes.

GETTING OUT OF MUD

If the machine gets stuck in mud, use the procedure below to get it out.

If one crawler is stuck

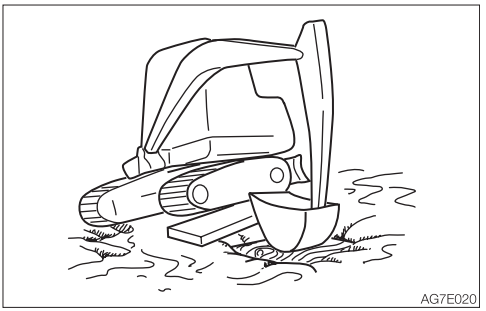

1. Swing the bucket to the side of the crawler being stuck.
2. Set the arm and boom to an angle of 90 to 110°.
3. Press the bottom of the bucket (not the teeth) against the ground.
4. Place a plank or the like under the lifted crawler.
5. Lift the bucket and slowly move the machine out of the mud.

If both crawlers are stuck

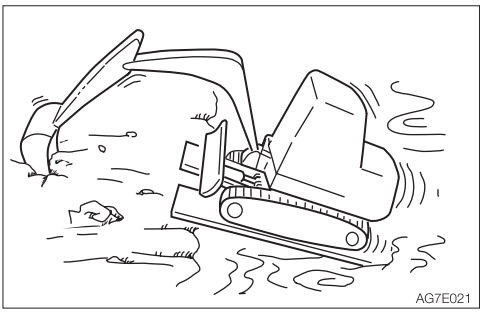

1. Perform the steps 1 to 4 above for both crawlers.
2. Dig the bucket into the ground in front of the machine.
3. Pull with the arm while traveling forward to slowly move the machine out.

OPERATIONS POSSIBLE WITH THIS MACHINE

Excavating

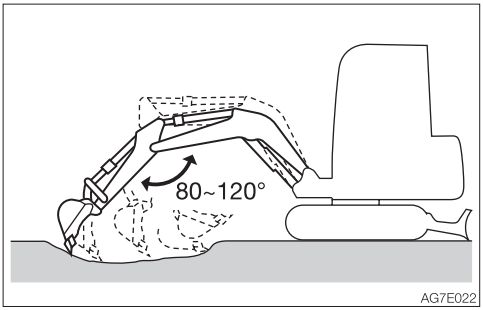

1. Set the dozer blade on the side opposite to the side you want to dig on.
2. Use the arm and bucket and dig with shallow, long strokes. The maximum digging force can be obtained when the boom and arm angle is 80 to 120°. Use this angle for effective digging.

Digging ditches

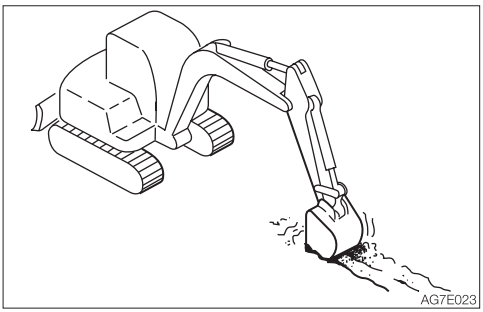

Install a bucket suited for digging ditches and set the crawlers parallel to the ditch to be dug for greater efficiency.
When digging wide ditches, dig the sides first, and then dig the center.

Digging side drains

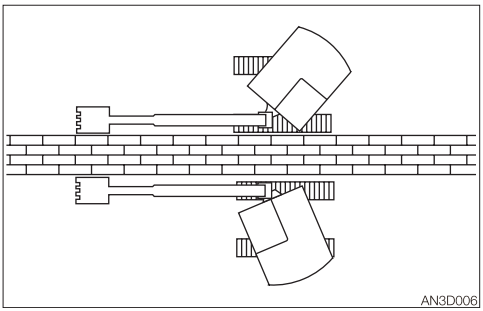

Use the boom swing function to dig side ditches as shown in the figure.

Loading

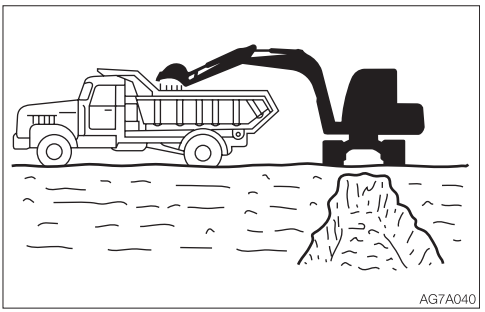

When loading dirt onto a truck bed, load from the back of the truck, as it is easier and able to load more load than doing it from the front.
Also, use a small slewing angle for greater efficiency.

Leveling

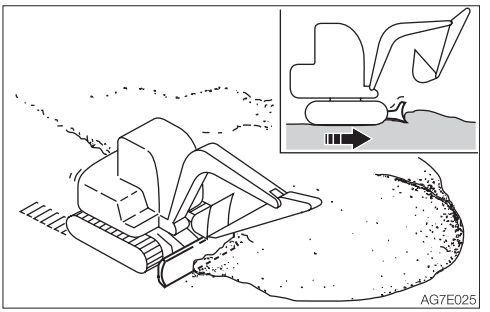

1. Bring the hoe attachment close to the body.
2. Gradually remove the dirt from the side of the mound.
3. Once the mound is low, remove the dirt from the top. If the load becomes too heavy for the machine body, adjust by raising or lowering the dozer blade.

MEMO

PARKING THE MACHINE

PARKING

⚠ WARNING

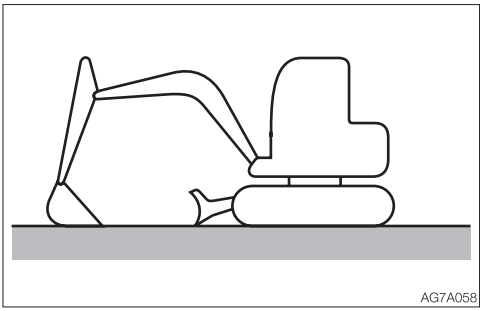

- **Park the machine on a flat, rigid and safe ground. Set the parking brake.**

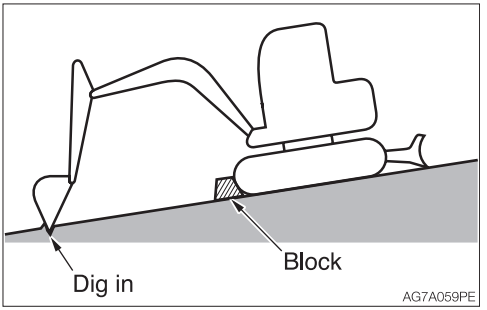

If you must park on a slope or incline, park the machine securely and block the movement of the machine.

- **When parking on a street, use barriers, caution signs, lights, etc., so that the machine can easily be seen even at night to avoid collision with other vehicles.**
- **Before leaving the operator's seat, raise the safety lock lever to engage the lock and stop the engine. Also, be sure to remove the key, lock the door and covers, take it with you and store it in a specified place.**

1. Set the left and right travel levers to the neutral position.
2. Return the throttle controller to set the engine to low idling.
3. Lower the bucket and the dozer blade to the ground.
4. Raise the safety lock lever to the locked position.
5. Stop the engine and remove the key.
   Refer to "Stopping the engine" on page 3-6.
   For machines equipped with accumulator: Refer to "Operating the machine with an accumulator" on page 2-105.

INSPECTION AND CHECKS AFTER STOPPING THE ENGINE

1. Check for oil or water leak and inspect the working equipment, covers and undercarriage. If any irregularities are found, repair.
2. Fill up the fuel tank.
   Refer to “Inspecting the fuel level” on page 5-27.
3. Remove any paper scraps or dirt from the engine room.
4. Remove any mud from the undercarriage.

Locking
Be sure to lock the following places:

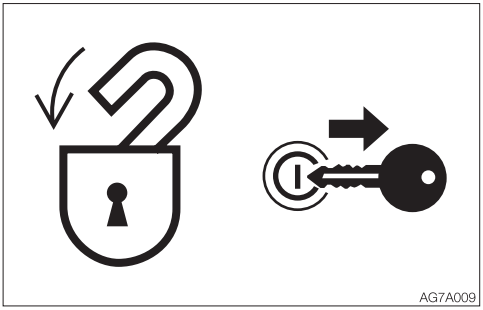

- Cab door
- Fuel filler cap
- Covers

HANDLING IN COLD CLIMATES

PREPARING FOR COLD CLIMATES

Starting engine in cold climates is not easy, and it becomes more difficult if the coolant freezes. Prepare for cold-climate problems as follows.

Replacing the fuel and lubricant
Replace the hydraulic oil, engine oil and fuel with those intended for cold climates.
Refer to “Fuel and lubricant table” on page 5-4.

Engine coolant

⚠ WARNING

The engine coolant is combustible. Keep away from flame.
Use long-life coolant (antifreeze) and tap water for the engine coolant.

Note: New machines are delivered with JIS Type 2 long-life coolant (antifreeze) at a concentration of 50%.
Refer to “Fuel and lubricant table” on page 5-4.

Battery
As the temperature drops, the battery performance decreases.
Inspect the battery. If it is discharging, contact a Takeuchi service agent to have the battery recharged.
Refer to “Inspecting the battery fluid level and replenishing” on page 5-43.

CAUTIONS AFTER OPERATIONS

Observe the following cautions to prevent mud, water, or the undercarriage from freezing and making it impossible for the machine to move.

- Remove all mud and water from the machine body. In particular, wipe the hydraulic cylinder rod clean to prevent damage to the seal caused by mud or dirt on the rod surface getting inside the seal together with drops of water.
- Park the machine on hard and dry ground. If this is impossible, park the machine on a wooden board placed on ground.
- Drain any water in the fuel tank to prevent it from freezing.
  Refer to “Draining the water from the fuel tank” on page 5-42.
- As the battery capacity drops markedly in low temperatures, cover the battery or remove it from the machine and keep it in a warm place.
  If the electrolyte level is low, add distilled water in the morning before beginning work. To prevent the battery electrolyte from freezing in the night, do not add water after the day’s work.

AFTER THE COLD CLIMATE

When the climate becomes warmer, do as follows:

- Replace the fuel and oil for all parts with those specified in the “Fuel and lubricant table”.
  Refer to “Fuel and lubricant table” on page 5-4.
- If a coolant of “one season type” is used, drain the cooling system completely, clean out the inside of the cooling system thoroughly, and fill with tap water.
  Refer to “Replacing the engine cooling system” on page 5-59.

HANDLING RUBBER CRAWLERS

Rubber crawlers have an inherent weakness, lack of strength, due to their use of rubber. Be sure to observe the prohibitions and cautions below to prevent the crawlers from being damaged or coming off.

PROHIBITIONS

Do not travel or operate the machine in the following places:

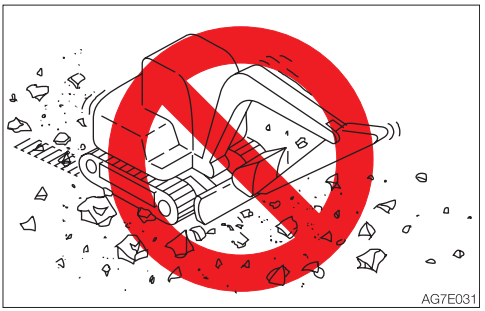

- Traveling and slewing on crushed rock, extremely rough hard rock, steel beams, scrap iron, or near the edges of steel plates will cause damage to the rubber crawlers.



- Traveling on riverbeds or places where there are large numbers of boulders may cause the stones to get caught and damage the crawler or make the crawler come off.
- Do not use the machine on the seashore. The salt may corrode the steel core.

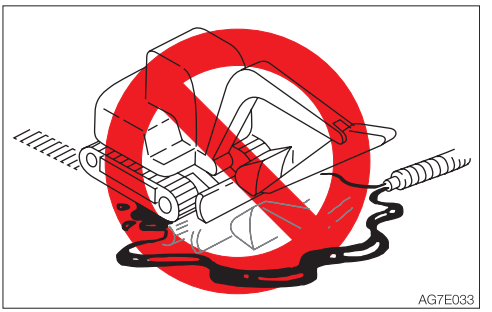

- Do not let fuel, oil, salt or chemical solvents get on the crawlers. These substances may corrode the bonding of the steel cores on the crawlers, resulting in rust or peeling. If any of these substances gets on the crawler, immediately clean it off with water.



- It will cause an irregular wear or damage to the lugs, if the machine travels on irregular surfaces such as recently paved with asphalt, exposed to a bonfire or of hot iron sheets under the blazing sun.
- Do not move earth in places where the rubber crawlers may slip. Doing so may speed up lug wear.