CAUTIONS

Observe the following cautions when operating the machine:

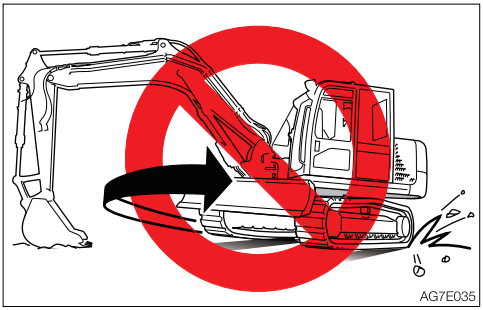

- Do not turn the undercarriage with the front of the machine body lifted using the hoe attachment (the upperstructure is not turned). Doing so will twist the crawlers with the load concentrated on a single point on the crawler belt, causing rapid damage to the crawlers.
- Avoid changing course abruptly or spin-turning on concrete surfaces whenever possible. Doing so may wear or damage the rubber crawlers.
- Avoid drops that may expose the rubber crawlers to strong shocks.
- Salt, potassium chloride, ammonium sulfate, potassium sulfate, and triple superphosphate of lime can damage the crawler belts. If any of these substances gets on the crawler belts, wash if off thoroughly with water.
- Do not let the sides of the rubber crawlers rub against concrete or walls.
- Do not damage the rubber crawlers by hitting the bucket against them.
- Be especially careful on snowy or frozen surfaces in winter, as the crawler belts tend to slip in such conditions.
- Use rubber crawler belts at temperatures between –25°C to +55°C (–14°F to 131°F).
- When storing the rubber crawlers for long periods of time (three months or more), do so indoors in a place not exposed to direct sunlight or rain.

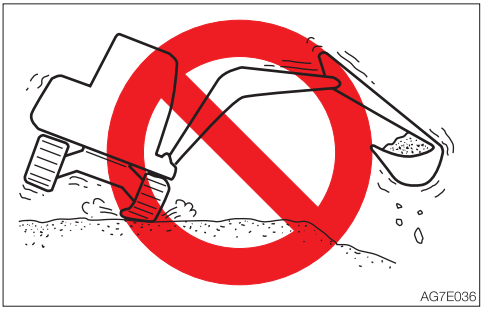

- Rubber crawler belts are not as stable as steel crawler belts since the entire lugs are made of rubber. Be very careful when slewing and swinging sideways.

PREVENTING THE RUBBER CRAWLERS FROM COMING OFF

Observe the following cautions to prevent the crawler from coming off:

- Always keep the crawlers at the proper tension.

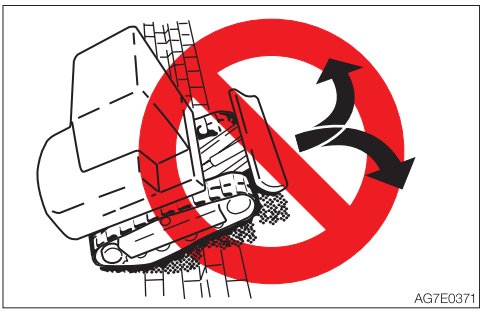

- When traveling over a large step such as a cobblestone or rock (20 cm (8 in.) or deeper), climb up the step at the right angle and do not change courses on top of the step.

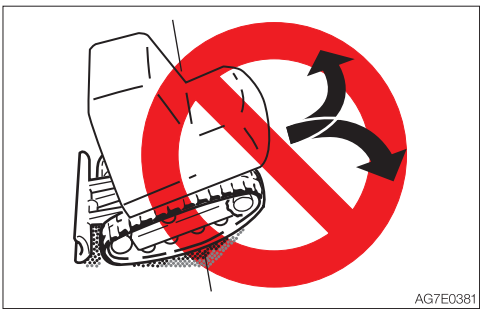

- When climbing in reverse, do not change directions at the point where the slope starts.



- Avoid traveling by setting one crawler on a slope or projecting portion and the other crawler on a flat surface (with the machine at a tilt of 10° or more). Travel with both crawlers set on flat surfaces.

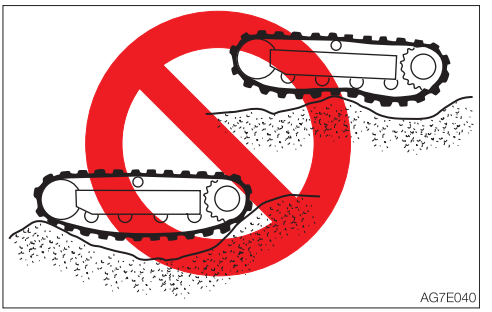

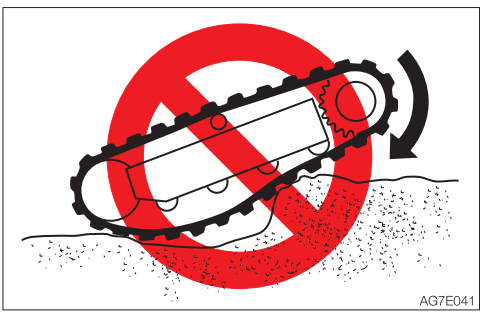

- Do not change directions when the crawler belts are slack as shown in the figure.

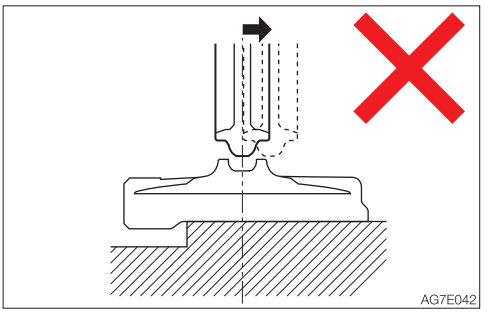

- The rubber crawler belts will come off if the machine travels backward in this condition.

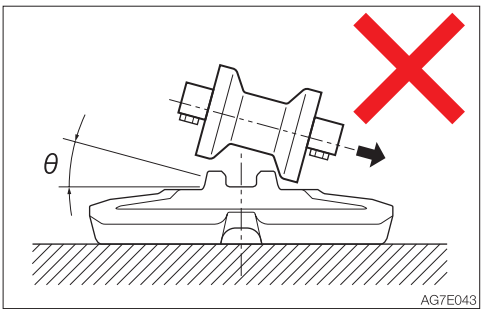

- The rubber crawler belts will come off if the machine turns in this condition.

STANDSTILL REGENERATION

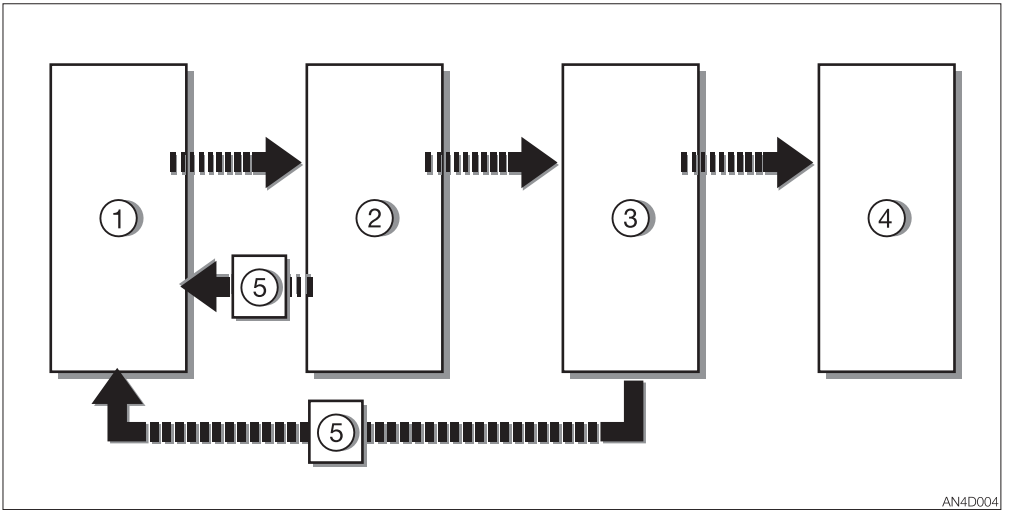

Mode		Indicator	Alarm	Engine status	Mode shifting condition
(1)	Normal mode	Off	Off	• Normal	• Detection of crystallization • Detection of soot accumulation • 1050 hours
(2)	Standstill regeneration demand	Flashing	Off	• Normal	• 5 hours • Standstill regeneration process
(3)	Standstill regeneration demand (warning level)	Flashing	On	• RPM is normal. • Torque is limited to 75%.	• 25 hours • Standstill regeneration process
(4)	Engine stop request	Flashing	On	• Low idle	• Repair
(5)	Standstill regeneration in process	On	Off	• Automatic control	• 35 to 40 minutes (average)

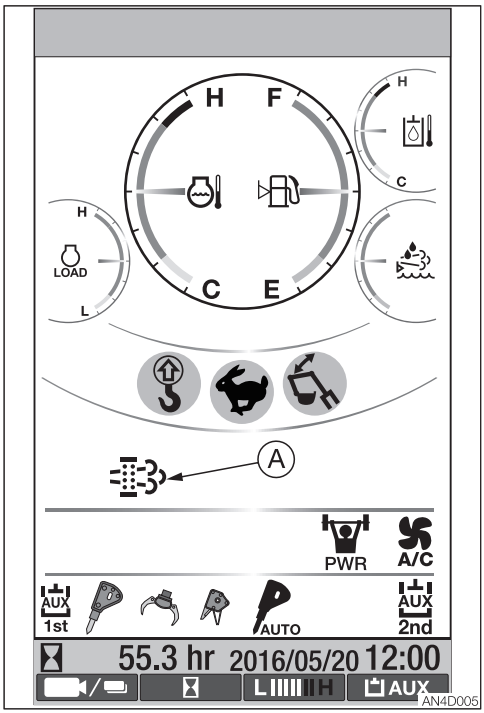

- In the SCR system, the indicator (A) starts flashing when the crystallization or soot accumulation in the DPF is detected or when the machine is used for 1050 hours without performing the standstill regeneration ((1) → (2)).
  Perform the standstill regeneration as soon as possible.
- The indicator (A) changes from flashing to solid when the standstill regeneration is started and goes off when the regeneration is ended ((2) → (5) → (1)).
  For details on starting the standstill regeneration, refer to “Standstill regeneration/Stop switch” on page 2-59.

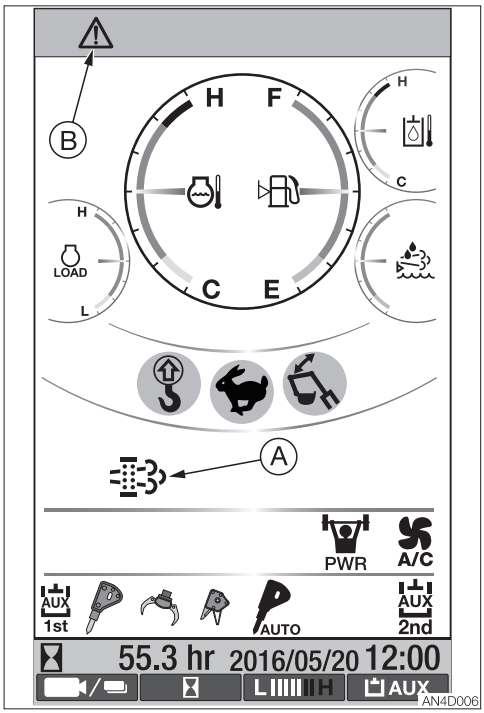

- While in the mode (2), the indicator (A) starts rapidly flashing and the alarm starts sounding when the machine is used for 5 hours without performing the standstill regeneration. The indicator (B) also starts flashing and the engine torque is limited to 75% of the normal operation ((2) → (3)).
  Perform the standstill regeneration as soon as possible.
- The indicator (A) changes from flashing to solid when the standstill regeneration is started and goes off when the regeneration is ended ((3) → (5) → (1)).
  For details on starting the standstill regeneration, refer to “Standstill regeneration/Stop switch” on page 2-59.

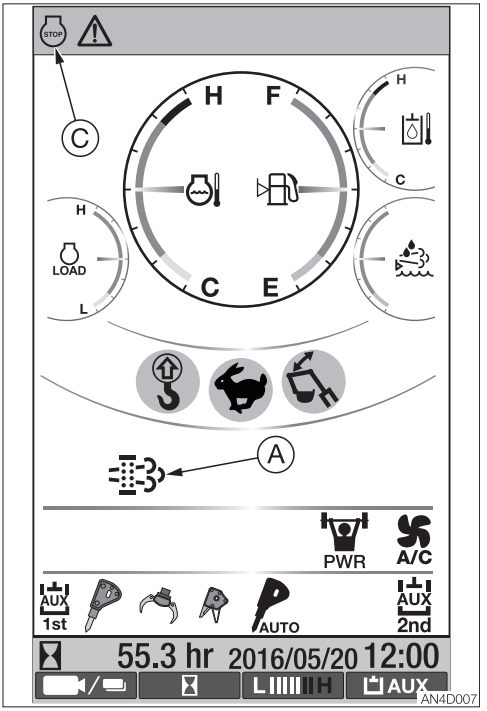

- While in the mode (3), the engine RPM drops to low idle and the indicator (C) starts flashing when the machine is used for 25 hours without performing the standstill regeneration ((3) → (4)).
  The standstill regeneration using the switch becomes disabled. In this case, ask your sales or service dealer for repair.

HANDLING THE ENGINE

PROHIBITIONS

Do not modify the exhaust gas control system. Any usages other than described in this manual are prohibited.

CAUTIONS

- To maintain the engine's exhaust performance, operate or use the machine and perform inspection and maintenance by following this manual.
  Incorrectly operating or using the machine or performing inspection and maintenance could cause machine failure.
- <Applicable machine models 514700393 or later>
  If the exhaust gas control system is not properly functioning, the ECM error warning lamp flashes and an error code appears.
  If an error code appears, immediately repair the fault detected, or consult your sales or service dealer for help. Refer to "Exhaust gas control system error" on page 6-40.
- <Applicable machine models 514700393 or later>
  If the ECM error warning is ignored, the operator inducement system activates. Since the system limits the engine output, there is a possibility that machine becomes unable to move.

DIESEL FUEL

The diesel fuel used must meet the requirements specified in the region where the machine is operated.
Refer to "Service data" on page 5-4.

TRANSPORT



LOADING AND UNLOADING

⚠ WARNING

The machine may roll or tip over or fall while being loaded or unloaded. Take the following precautions:

- **Select a firm, level surface and keep sufficient distance from road shoulders.**
- **Secure the ramps of adequate strength and size to the truck bed. The slope of the ramps must not exceed 15°. If the rumps are bowed down too low, support them with poles or blocks.**
- **Never use the working equipment to load or unload the machine. Doing so may result in tipping over or falling down of the machine.**
- **Keep the truck bed and loading ramps clean of oil, soil, ice, snow, and other materials to prevent the machine from sliding sideways. Clean the crawlers.**
- **Chock the transporter wheels to prevent movement.**
- **Turn off the deceleration switch and auto-deceleration switch. Otherwise, the engine speed may suddenly increase to cause troubles.**
- **When being loaded or unloaded, travel slowly in 1st (low) gear by following the signal from the signal person.**
- **Never change courses on the ramps.**
- **Do not slew/swing on the ramps. The machine may tip over.**
- **When slewing/swinging on the truck bed, do it slowly as the footing should be unstable.**
- **Lock the cab door after being loaded, if applicable. Otherwise, the door may open during transport.**
- **Chock the tracks and secure the machine to the truck bed with wire rope or chain.**

When loading or unloading the machine, be sure to use ramps or a platform and follow the procedure below.

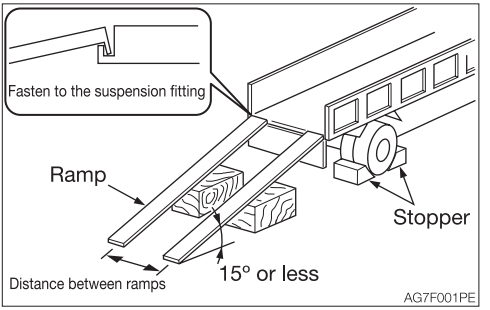

1. Set the parking brake on the transporter and chock the wheels.
2. Fix the ramps securely to the truck bed. The slope of the ramps must not exceed 15°.
3. Align the center of the truck bed with the center of the machine, and of the ramp with the center of the crawler.
4. Make sure the dozer blade does not hit the ramps.
5. Lower the hoe attachment as far as possible without letting it touch the transporter.
6. Decrease the engine speed.

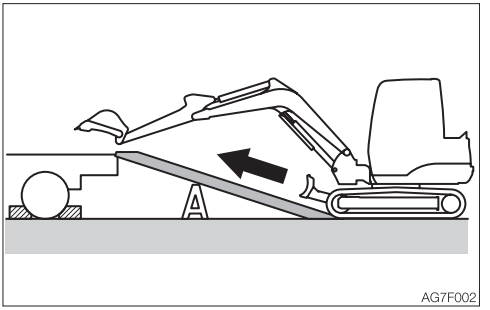

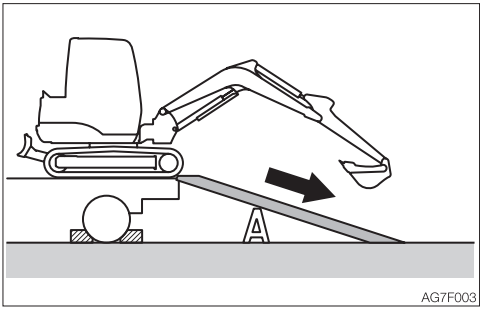

7. Drive the machine straight toward the ramps and travel up or down the ramps at 1st (low) speed, by following the signal from the signal person.
8. Load the machine at the specified position on the transporter.
   Refer to “Transporting posture” on page 4-6.

HOISTING THE MACHINE

⚠ WARNING

- **Know and use the correct crane signals.**
- **Check the hoisting equipment for damaged or missing parts on a daily basis and replace as necessary.**
- **When hoisting, use a wire rope capable of lifting the machine mass.**
- **Hoist the machine in only as manner described in the procedure below. Do not do it in any other manner. Doing so is dangerous as it may result in the machine losing its balance.**
- **Do not hoist the machine with an operator on it.**
- **When hoisting, hoist slowly so that the machine does not tip.**
- **Keep everyone out of the area when hoisting. Do not move the machine over the heads of the persons.**

IMPORTANT: This hoisting method applies to machines with standard specifications. The center of gravity differs according to the attachments and optional equipment installed.
Contact your Takeuchi service agent for details.

Hoisting

1. Slew the upperstructure so that the dozer blade is at the rear of the machine (set the upperstructure parallel to the track frame).
2. Raise the dozer blade fully.
3. Extend the bucket cylinder and arm cylinder fully to lower the boom to its lowermost position.
4. If the boom is swung to either the left or right side, set it in the neutral position.
5. Raise the safety lock lever to the locked position.
6. Stop the engine, remove the starter key and get off the machine.
7. Install the wire ropes as shown on the figure below. Install the wire ropes and hoisting attachment without letting them touch the machine body.
8. Hoist the machine slowly until it leaves the ground.
9. Stop hoisting until the machine becomes stable, and then start hoisting the machine slowly again.

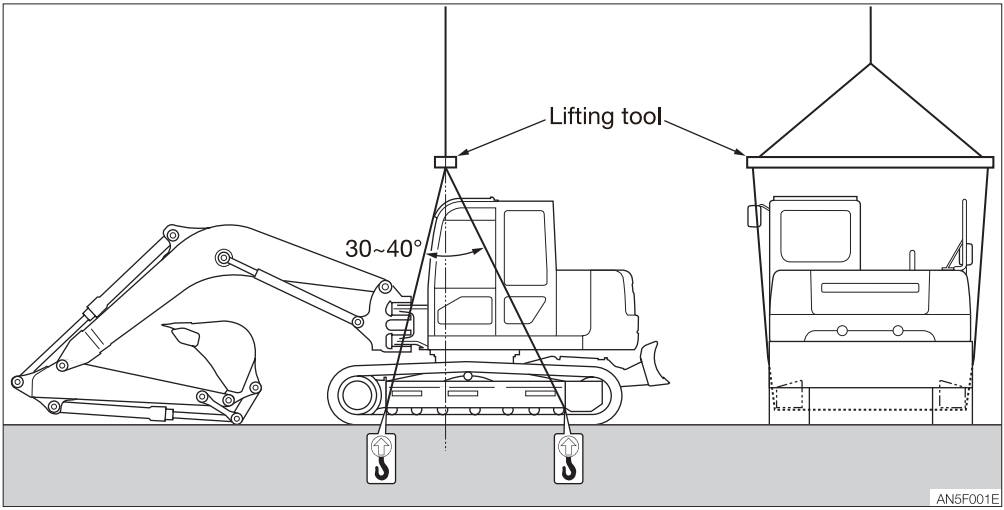
Lifting tool
30~40°
AN5F001E

SECURING THE MACHINE

After loading the machine at the specified position, secure it as described below.

Transporting posture

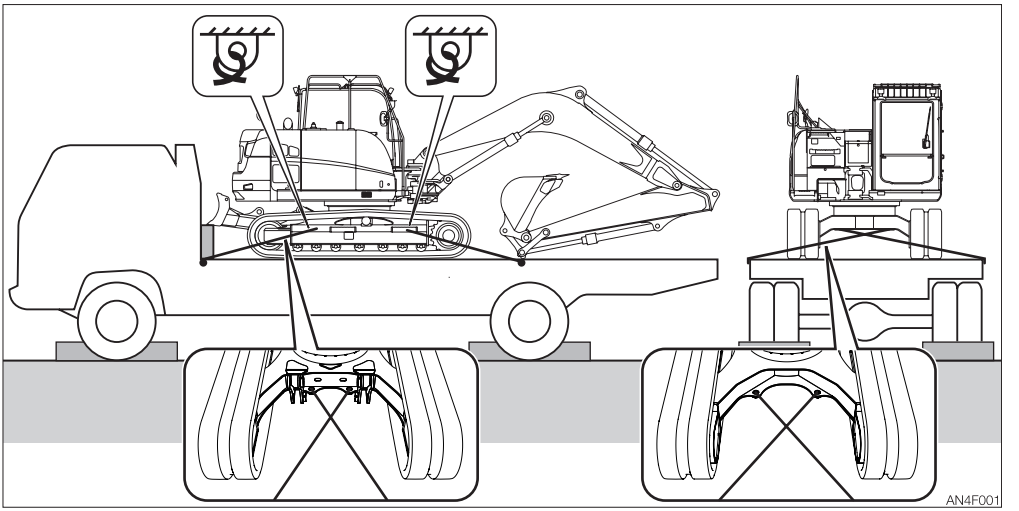

1. Lower the dozer blade.
2. Extend the bucket cylinder and arm cylinder fully, and then lower the boom.
3. Raise the safety lock lever to the locked position.
4. Stop the engine, remove the starter key and lock all locks.
5. Place the stoppers (chocks) in front and behind the crawlers.
6. Install a chain or wire rope over the lower frame of the machine and fasten it securely to prevent the machine from slipping sideways.
7. Secure the bucket with a chain or wire rope.

IMPORTANT: Place a wooden block under the bucket to protect the floor from damage caused by the bucket.

Precautions to be taken during transportation

⚠ WARNING

- **Know and follow the applicable safety rules, vehicle code and traffic laws when transporting the machine.**
- **Select the best transport route by considering the length, width, height and weight of the truck with the machine loaded on it.**
- **Never abruptly start or stop or run at a high speed at the sharp curves during transport. Doing so will move or lose the balance of the loaded machine.**

MAINTENANCE



GENERAL

MAINTENANCE OVERVIEW

To keep the machine in good condition and use if for a long period, perform the inspection and maintenance properly and safely following the procedures recommended by this manual.

The inspection and maintenance items are divided into groups according to the machine's total operating time: every 10 hours (walk-around and daily inspection), every 50 hours, every 250 hours, etc. Refer to the hour meter readings to determine when to schedule an inspection and maintenance. Items for which it is not possible to determine the inspection and maintenance interval are included under "When required".

When operating the machine in extremely harsh environments (with high dust levels or high temperatures), inspection and maintenance should be performed earlier than the times specified on the Maintenance List.

CAUTIONS ON MAINTENANCE

Do not perform any other inspection and maintenance works than those listed in this manual.
For works not listed in this manual, ask your sales or a service dealer for help.

Keep the machine clean

- Clean the machine before performing inspection and maintenance and try to keep it clean.
- Stop the engine before washing the machine. Cover the electrical parts so that water cannot enter. Water on electrical parts could cause short-circuits or malfunctions. Do not use water or steam to wash the battery, electronic control components, sensors, connectors or the operator's compartment.

Fuel, lubricant, grease and DEF/AdBlue®

- Choose fuel, lubricant, grease and DEF/AdBlue® by referring to the "Fuel and lubricant table".
- Use clean fuels, lubricants, greases and DEF/AdBlue® which do not contain water, and take care not to allow any dirt to enter the tank when replacing or refilling.
- Store fuels, lubricants, greases and DEF/AdBlue® in the prescribed places and in such a way that no water or dirt can get in them.

Cautions on refueling

- If the port includes a strainer, do not remove the strainer when fueling.
- After fueling, be sure to securely tighten the fuel filler cap.
- Do not add more than the specified amount of fuel.

Do not use fuel to clean parts
Do not use fuel to clean parts. Use a non-combustible cleaning agent.

Keep dirt out
When mounting and removing parts, do so in a place where there is no dust, clean the working area and the part, and keep dirt out.

Clean the installation surfaces
When installing and removing parts, be sure that the surfaces of contact of the parts are clean. If the sealing grooves of the surface of contact are damaged, consult your sales or service dealer for repair or release.

Seals and split pins
- Be sure to replace all seals and cotter pins with new ones.
- When installing, be careful not to damage or twist the seal.

Sealing tape

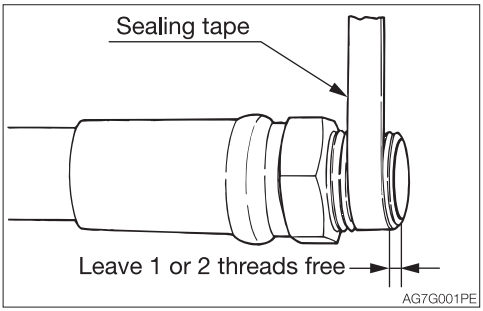

- When wrapping the plug with sealing tape, remove any old sealing tape from the threads and clean the threads.
- Wrap the thread tight with seal tape starting 1 or 2 threads away from the thread end.

Disposing of wastes
- Always collect oil that is drained from the machine in containers. Improperly disposed waste oil can cause environmental harm.
- Follow appropriate laws and regulations when disposing of harmful objects such as oil, fuel, cooling water, coolant, filters, batteries and DEF/AdBlue®.

Check after maintenance
- Gradually increase the engine speed from a low idle to maximum speed and check that there is no oil or water leaking from serviced parts.
- Operate each control lever and check that the machine is operating properly.

Cautions on handling of battery wiring
- Disconnect the wiring from the both terminals (+ and –) on the battery before working on the electrical system or doing electric welding.
  Always disconnect it from the earth side (–). When connecting, connect the earth side last.
- Do not disconnect the battery wiring while the engine is moving. Otherwise, the electric circuits of the rotary converter or others may be damaged.
- The SCR system operates for up to 2 minutes after the starter switch is turned to the OFF position.
  When removing the batteries or electrical connectors for inspection or maintenance, wait for at least 2 minutes after the starter switch is turned to the OFF position. Otherwise, the system could fail.

SERVICE DATA

FUEL AND LUBRICANT TABLE

Select the appropriate fuel, lubricant and grease according to the temperature by referring to the table below.

- Regardless of the specified time, change the oil if it becomes too dirty or degraded.
- When refilling, never mix oils of different brands. If a brand is to be changed, replace the whole fuel/oil.

Fuel

Diesel fuel specifications

Diesel fuel should comply with the following specifications. The table lists several worldwide specifications for diesel fuels.

Diesel fuel specification	Area
ASTM D975 No.1-D S15 No.2-D S15	USA Canada
EN590: 2009	European union

Diesel fuel specification	Area
BS2869-A1 or A2	United kingdom
ISO 8217DMX	International

Fuel tank	**Diesel fuel**	To maintain the performance and service life of the engine, always use clean and high-quality fuel. • To avoid freezing in cold climates, use a diesel fuel that still functions when the temperature is at least 12°C (21.6°F) below the lowest expected ambient temperature. • Use a diesel fuel that has a cetane number of 45 or higher. When operating at a very low temperature or at a high altitude, a higher cetane number fuel will be required. • Use fuel with sulfur content of less than 15 ppm by volume. Especially in the U.S.A. and Canada, ultra-low sulfur fuel should be used. A higher sulfur content fuel may cause sulfuric acid corrosion in the cylinders of the engines. • Never mix kerosene, used engine oil, or residual fuel with the diesel fuel. Use of kerosene is prohibited. • Poor quality fuel can reduce engine performance and / or cause engine damage. • Fuel additives are not recommended. Some fuel additives may cause poor engine performance. • Use zinc- and sodium-free fuel. • Do not use the fuel that has been in storage for a long time. • Do not use the fuel purchased from a non-authorized dealer. • In the EU, use fuel that satisfies the following conditions · Sulfur content is 10 mg/kg (10 ppm) or less, and 15 mg/kg (15 ppm) or less at the final distribution point. · Cetane number is 45% or more. · Fatty acid methyl ester (FAME) content is 7% v/v or less.

Lubricant

Location	Type	Type by air temperature -4 14 32 50 68 86 104°F -20 -10 0 10 20 30 40°C	When to replace
Hydraulic oil tank	Takeuchi genuine hydraulic oil 46	ISO VG46	Every 4000 hrs.***
	Biodegradable oil recommended by Takeuchi***** Mobil EAL Envirosyn 46H Panolin HLP Synth 46	ISO VG46	Every 4000 hrs.
	Anti-wear hydraulic oil	ISO VG32 ISO VG46 ISO VG68	Every 2000 hrs.***
Engine cooling system	Cooling water (water + coolant)** SAE: J814C or J1034	Mixture of 50% coolant	Every 1000 hrs. or two years
Engine oil pan****	Shell Rimula R6 LM 10W-40		Every 500 hrs. or once a year
Slew reduction gear Travel reduction gear	Gear oil API: GL-4	SAE 90	Every 1000 hrs after the initial 250 hrs*.
Slew bearing	Lithium based grease EP-2 NLGI No.2	—	Every 500 hrs.
Working equipment			Daily or every 10 hrs.

*: If the ratio of traveling time to total operating time is high, replace the gear oil earlier than the specified time.

**: For water, use tap water (soft). Do not use well or river water. When the ambient temperature drops below 0°C (32°F), add coolant (antifreeze). Follow the coolant manufacturer's instructions to determine the mixture ratio.

***: The hydraulic oil replacement interval depends on the type of hydraulic oil being used. New machine are delivered with Takeuchi genuine hydraulic oil 46, and the hydraulic oil replacement intervals indicated in this manual assume that Takeuchi genuine hydraulic oil 46 is being used. When using conventional antiwear hydraulic oil, the hydraulic oil should be replaced every 2000 hours.

****: The engine oil used at the factory. If any engine oil other than Shell Rimula R6 LM 10W-40 is to be used, refer to the engine oil list DQC IV LA. (See the instruction manual for the engine.)

*****: When replacing a mineral oil with a biodegradable oil, the residual mineral oil in the machine should be about 2% or less, as complying with the ISO 15380. For details, refer to "Biodegradable oil" on page 8-13.

API standard: American Petroleum Institute
ACEA standard: Association des Constructeurs Européens d'Automobiles
SAE standard: Society of Automotive Engineers

Volume

Engine oil pan	Engine cooling system	Hydraulic oil tank
Upper limit: 10 L (10.6 US qt.) Lower limit: 9 L (9.5 US qt.)	27 L (28.5 US qt.)	System: 235 L (62.1 US gal.) Tank: 102 L (26.9 US gal.)

Fuel tank	Slew reduction gear	Travel reduction gear
Level capacity: 221 L (58.4 US gal.)	5.3 L (5.6 US qt.)	2.1 L X 2 (2.22 US qt.) X 2

REGULARLY REPLACE THE HYDRAULIC OIL

When a hydraulic breaker is used, the oil deteriorates more quickly than that used for a usual excavation operation. Be sure to replace the hydraulic oil and the return filter elements.

- Failure to replace these in time can lead to damage to the machine and the breaker hydraulic system. To prolong the service life of the hydraulic devices, properly replace the hydraulic oil and the return filter elements according to the table below.
- When replacing the hydraulic oil, clean the suction strainer.

Replacement interval (hours)

Item	Hydraulic oil	Filter element
1st time	—	25
2nd time	—	100
Periodically	1200 (600)	200

When the breaker operating ratio is 100%. Refer to “Hydraulic breaker” on page 8-6.

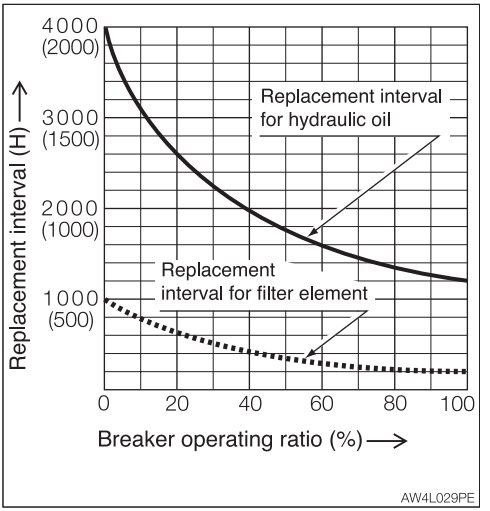

( ): When a conventional antiwear hydraulic oil is used.

HANDLING OF DEF/ADBLUE®

The standard for DEF/AdBlue®
The DEF/AdBlue® used must be compliant with ISO 22241.

Quantity of DEF/AdBlue® to add

DEF/AdBlue® tank
Tank capacity 20 L (5.3 US gal.)

Storing DEF/AdBlue®
- Store the DEF/AdBlue® solution in a sealed container to prevent it from vaporizing.
- Store the solution in an indoor place, away from the direct sunlight, well vented and at the temperature lower than 25°C (77°F). Do not store it in a place where the temperature falls below –5°C (23°F).
- The life of DEF/AdBlue® is dependent on the temperature of the room it is stored.
- The quality of DEF/AdBlue® is maintained even after it is frozen and thawed. It is useable without doing anything.
- When storing or carrying the DEF/AdBlue® solution, use the container in which it was contained when purchased.
  If you must use the other container made out of polyethylene or stainless steel, choose a clean one without any water or dirt adherent to it and clean it with the DEF/AdBlue® solution before use.
- Do not store the DEF/AdBlue® solution in a place where the temperature may become extremely high.
  There is a risk that ammonia gas may be released if the DEF/AdBlue® solution heats up to high temperature.
  Seal the container before storing, and open the seal in an open outdoor area.
  If there is a pungent odor, do not get near it unless necessary.
- Do not use expired DEF/AdBlue® solution (including solution left in the tank) stored for a long period. Doing so could cause ammonia slip, degraded NOx conversion efficiency or device damage. For the life of DEF/AdBlue®, refer to the table below.

Effective storage period in accordance with JIS K2247-2/ISO 22241-1

Storage temperature	Expected DEF/AdBlue® life
$\leqq$ 10°C (40°F)	36 months
10°C (40°F)<T $\leqq$ 25°C (77°F)	18 months
25°C (77°F)<T $\leqq$ 30°C (86°F)	12 months
30°C (86°F)<T $\leqq$ 35°C (95°F)	6 months

LIST OF CONSUMABLES

Periodically replace consumables such as filters and elements according to the table below.

System	Item	Part name	Part No.	When to replace
Hydraulic system	Hydraulic oil return filter	Element	15511-03400	Every 1000 hrs after the initial 50 hrs.
	Pilot line filter		15512-00601	
	Air breather filter		15520-00902	Every 1000 hrs.
Engine lubrication system	Engine oil filter	Cartridge	19039-00216	Every 500 hrs. or once a year
SCR system	Supply module filter	Cartridge	D04602317	Every 1000 hrs. or three years
Fuel system	Pre-fuel filter	Element	19039-00237	Every 1000 hrs. or once a year
	Main fuel filter		19039-00218	
Air cleaner system	Air cleaner	Primary (Outer) element	19111-14001	Every 1000 hrs. or two years
		Secondary (Inner) element	19111-14002	When the primary elements are replaced.
AC system	Receiver dryer		19115-08311	Every 2 years
	Circulation filter	Element	19115-06736	Once a year or if clogging remains after cleaning
	Ventilation filter		19115-13680	

LIST OF TOOLS (IF EQUIPPED)

Code	Part name	Part No.	Remarks
1	Spanner	16900-01012	10-12
2	Spanner	16900-01417	14-17
3	Screwdriver	16902-20205	(+) (–) replaceable shank
4	Hammer	16903-00330	3/4
5	Adjustable wrench	16904-00250	250 mm
6	Pliers	16905-00200	200 mm
7	Spanner	16900-01013	10-13
8	Spanner	16900-01922	19-22
9	Spanner	16900-02427	24-27
10	Spanner	16900-02730	27-30
11	Spanner	16900-03236	32-36
12	Spanner	16909-00019	19
13	Spanner	16901-00041	41
14	Hex. wrench	16906-00250	2.5 mm
15	Hex. wrench	16906-00500	5 mm
16	Hex. wrench	16906-00600	6 mm
17	Hex. wrench	16906-00800	8 mm
18	Hex. wrench	16906-01000	10 mm
19	Hex. wrench	16906-01200	12 mm
20	Tool case	16914-00005	
21	Case	16919-00001	
22	Grease gun	16910-60610	500 cc
23	Drain connector	15545-12201	90-degree type
24	Drain connector	15545-12200	Straight type

LIST OF TIGHTENING TORQUES

Nuts and Bolts (for ISO strength category 10.9)

Tighten nuts and bolts at the torques shown on the table below, unless otherwise specified.

- The tightening torques used for the mounted plastic covers are not listed in the table below. Consult your sales or service dealer for details. They will be damaged if over tightened.
- When replacing nuts and bolts, replace them with nuts and bolts of the same size and standards.
- Tighten nuts and bolts alternately (top, bottom, left then right) or in 2 or 3 times so that they are evenly tightened.

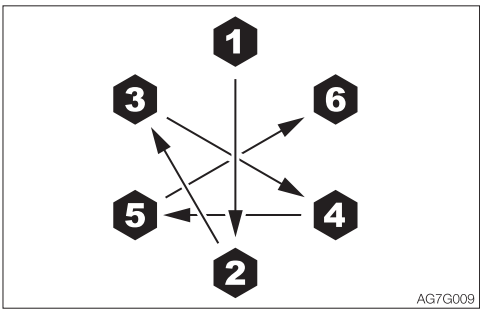

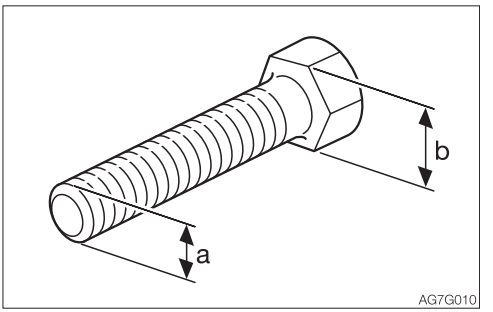

Classification	Head width (b)	Size (a) x pitch	Tightening torque	
			General connection points	
	mm	mm	N·m	ft-lb
Coarse	10	M6 x 1.0	9.8±0.8	7.2±0.6
	12, 13	M8 x 1.25	23±1.8	17±1.4
	14, 17	M10 x 1.5	47±3.8	35±2.8
	17, 19	M12 x 1.75	83±6.6	62±5
	19, 22	M14 x 2.0	134±10.7	99±7.9
	22, 24	M16 x 2.0	208±16.6	153±12.2
	27, 30	M20 x 2.5	411±32.9	303±24.2
Fine	12, 13	M8 x 1.0	25±2	18±1.4
	14, 17	M10 x 1.25	50±4	37±3
	17, 19	M12 x 1.5	87±7	64±5.1
	19, 22	M14 x 1.5	135±10.8	100±8
	22, 24	M16 x 1.5	221±17.7	163±13
	27, 30	M20 x 1.5	452±36.2	333±26.6

MEMO

SAFETY-CRITICAL PARTS

To use the machine safely, periodically perform inspection and maintenance. The safety-critical parts listed below must be periodically replaced for an increased safety.
Serious injury or a fire could result if they are worn or damaged.

List of safety-critical parts

Unit		Safety-critical parts to be replaced periodically	When to replace
Fuel system		Fuel hoses	Every 2 years
		Packing on fuel filler cap	
Engine		Engine oil filter hoses	
Cooling system		Rubber hoses	
Heater & AC systems		Heater hoses	
		Air conditioner hoses	
Hydraulic system	**Main body**	Hydraulic hoses (pump - delivery)	
		Hydraulic hoses (pump - suction)	
		Hydraulic hoses (slew motor)	
		Hydraulic hoses (travel motor)	
	Working equipment	Hydraulic hoses (boom cylinder piping)	
		Hydraulic hoses (arm cylinder piping)	
		Hydraulic hoses (bucket cylinder piping)	
		Hydraulic hoses (swing cylinder)	
		Hydraulic hoses (blade cylinder)	
		Hydraulic hoses (pilot valve)	
		Hydraulic hoses (auxiliary piping)	
		Seat belt	Every 3 years
		Non-slip sheet	
Engine		V-rib belt	Every 3000 hrs.

The material of the safety-critical part listed above tends to change over time and cause wear or deterioration. It is difficult to determine the degree of deterioration at the periodic inspection, and thus they need to be replaced with new ones after a certain time to maintain their proper performance even if they appear in good condition. Note that regardless of the replacement schedule, replacement must be performed immediately if a symptom of wear is found. If a hose clamp is deformed or cracked, replace it together with the hose immediately. When replacing the safety-critical parts, ask your sales or service dealer.
In addition to the safety-critical parts, inspect the hydraulic hoses and retighten or replace as necessary. When replacing the hydraulic hoses, replace the O-rings and seals at the same time.
Check the fuel and hydraulic hoses according to the periodic schedule described below. Refer to “Maintenance”.

Type of inspection	Inspection item
Daily inspection	Leakage from the connecting parts of hydraulic or fuel hoses Damage to cab - replace*
Monthly inspection	Leakage from the connecting parts of hydraulic or fuel hoses Damaged hydraulic or fuel hoses (cracks, wear and tear)
Annual inspection	Leakage from the connecting parts of hydraulic or fuel hoses Deteriorated, twisted, damaged hydraulic or fuel hoses (cracks, wear and tear) or hoses in contact with other parts of the machine

*: Cab parts No. 05786-00161

MAINTENANCE LIST

Inspection and maintenance item	Page
Walk-around inspection	
Inspecting by opening the engine hood and covers	5-20
Inspecting by walking around the machine	5-21
Inspecting while sitting in the operator's seat	5-21
Daily inspection (every 10 hours)	
Inspecting and replenishing the coolant	5-22
Inspecting and replenishing the engine oil	5-24
Cleaning the dust screen	5-25
Inspecting the pre-fuel filter and draining	5-26
Inspecting the fuel level	5-27
Inspecting the hydraulic oil tank level and replenishing	5-28
Inspecting and cleaning the air cleaner	5-30
Lubricating the working equipment	5-32
Checking the DEF/AdBlue® level and refilling	5-33
After the initial 50 hours (only for new machines)	
Replacing the hydraulic oil return filter	5-36
Replacing the pilot line filter	5-37
Inspecting and adjusting the compressor belt (AC)	5-38
Every 50 hours	
Inspecting and adjusting the crawler tension	5-40
Draining the water from the fuel tank	5-42
Inspecting the battery fluid level and replenishing	5-43
After the initial 250 hours (only for new machines)	
Replacing the slew motor gear oil	5-46
Replacing the travel motor gear oil*	5-47

*: If the percentage of the traveling time within the total operating time is high, replace the gear oil earlier than the specified time.
(AC): Air conditioner

Inspection and maintenance item	Page
Every 250 hours	
Inspecting the slew motor gear oil	5-48
Cleaning the cooler fins	5-49
Inspecting and adjusting the compressor belt (AC)	5-49
Cleaning the air filters (AC)	5-50
Cleaning the condenser (AC)	5-51
Inspecting the refrigerant (gas) level (AC)	5-52
Every 500 hours	
Lubricating the slew bearing	5-54
Replacing the engine oil and the oil filter	5-55
Inspecting the concentration of coolant additive	5-56
Inspecting the slew pinion gear	5-57
Every 1000 hours	
Replacing the hydraulic oil return filter	5-58
Replacing the pilot line filter	5-58
Replacing the slew motor gear oil	5-58
Replacing the travel motor gear oil*	5-58
Replacing the engine cooling system	5-59
Replacing the air cleaner element	5-61
Replacing the air breather filter	5-62
Replacing the fuel filters	5-62
Replacing the DEF/AdBlue® supply module filter	5-64
Inspecting and adjusting the V-rib belt	5-64
Inspecting the engine installation condition	5-64
Inspecting the low-temperature starting device	5-64

*: If the percentage of the traveling time within the total operating time is high, replace the gear oil earlier than the specified time.
(AC): Air conditioner

Inspection and maintenance item	Page
Every 2000 hours	
Inspecting the accumulator	5-65
Every 3000 hours	
Replacing the V-rib belt	5-67
Every 4000 hours	
Replacing the hydraulic oil and cleaning the suction strainer	5-68
When required	
Replacing the bucket teeth and the side cutters	5-71
Replacing the bucket	5-73
Adjusting the gap between the bucket and arm (If equipped)	5-76
Inspecting and replenishing the windshield washer fluid	5-77
Lubricating the levers and pedals	5-78
Inspecting the rubber crawlers	5-79
Replacing the rubber crawlers	5-80
Replacing the diesel particulate filter <Applicable machine models 514700252 or later>	5-81
Every 2 years	
Replacing the receiver dryer	5-82

*: If the percentage of the traveling time within the total operating time is high, replace the gear oil earlier than the specified time.

MEMO

WALK-AROUND INSPECTION

Perform the following inspections every day before starting the engine for the first time.

⚠ WARNING

- **Before operating, perform the walk-around inspections and make repairs immediately where necessary.**
- **Be sure to secure the engine hood or cover before working the inside. Do not keep the hood or cover open on a windy day or if the machine is parked on a slope.**

Before starting the engine, look around the machine and clean any combustibles from the surroundings of the engine. Also, inspect if oil or water is leaking and any nuts, bolts or electric wiring are loosened or damaged.

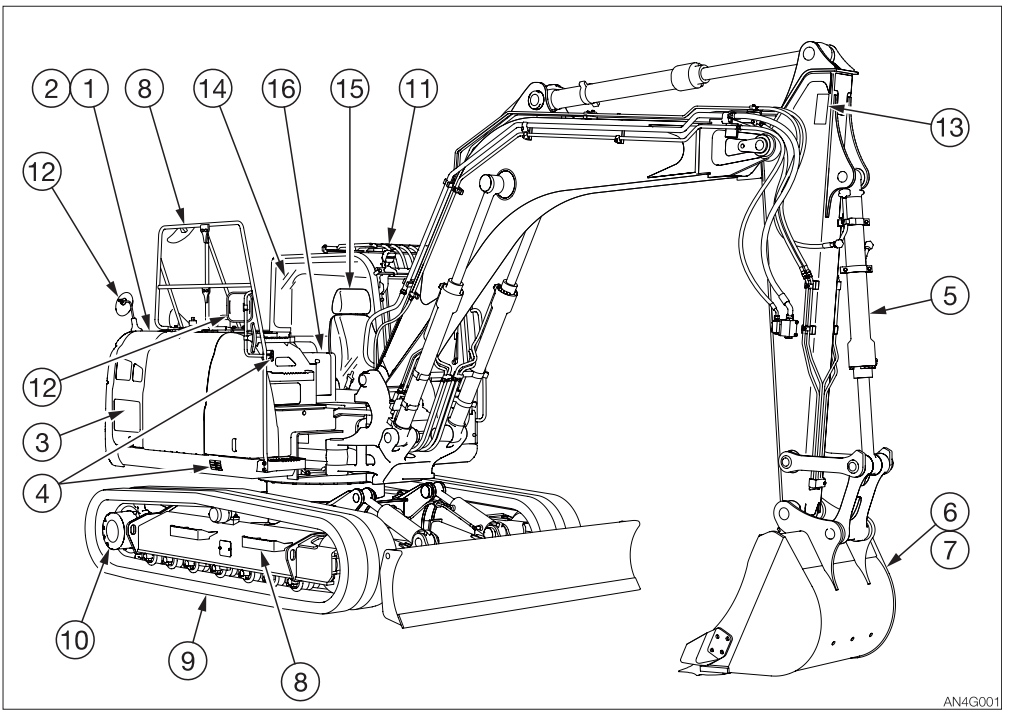

INSPECTING BY OPENING THE ENGINE HOOD AND COVERS

1. Check for any twigs, leaves, oil or other combustible materials around the engine and battery.
2. Check for leakage of oil, fuel, DEF/AdBlue® or engine cooling water around the engine.
3. Check for oil leakage from the hydraulic oil tank, hydraulic devices, hoses or connections.

INSPECTING BY WALKING AROUND THE MACHINE

4. Check lights for dirt, damage and burnt out bulbs.
5. Check attachments and hoses for damage.
6. Check the bucket, bucket teeth and side cutter for wear, damage and looseness.
7. Check the hook, slip stopper and hook mount of buckets with hooks for damage. (Option)
8. Check the handrail, the steps and the slip-resistant surfaces for damage and loose bolts.
9. Check the crawlers, carrier rollers, track rollers, idlers and sprockets for damage, wear and loose bolts.
10. Check for oil leakage from the travel motor, carrier rollers, track rollers and idlers.
11. Check the cab and guard for damage and loose nuts and bolts.
12. Check the mirrors for dirt or damage, and adjust them.
13. Check the labels for dirt and damage.

INSPECTING WHILE SITTING IN THE OPERATOR'S SEAT

14. Check the windshield for dirt or damage.
15. Check the seat and seat belt for dirt or damage.
    Check the operator's seat for dirt, oil or other combustible materials.
16. Check the monitor, instruments and switches for dirt or damage.

DAILY INSPECTION (EVERY 10 HOURS)

Perform the following inspections every day before starting the engine for the first time.

⚠ WARNING

- **Before operating, perform the daily inspections and make repairs immediately where necessary.**
- **Be sure to secure the engine hood or cover before working the inside. Do not keep the hood or cover open on a windy day or if the machine is parked on a slope.**

INSPECTING AND REPLENISHING THE COOLANT

Select a firm, level work area. Make sure there is adequate light and, if indoors, ventilation.

⚠ WARNING

- **Do not remove the radiator cap, the drain plug or the expansion tank cap when the cooling water is hot. Stop the engine and wait until the engine and the radiator cool before slowly loosening the radiator cap, the drain plug and the expansion tank cap to remove them.**
- **Always wear the protective goggle and gloves when handling coolant (antifreeze). If any coolant (antifreeze) comes in contact with eyes or skin, wash it off with clean water. Otherwise, it could result in injures.**
- **When performing maintenance on the machine, clean up the foot area and strictly observe the following so as not to fall:**
  - **Do not spill oil or grease.**
  - **Do not leave tools scattered around.**
  - **Watch your step when walking.**
- **Never jump down from the machine. Use the steps and handrails when climbing up and down the machine, and always support your body at three points with your hands and feet.**

Inspection

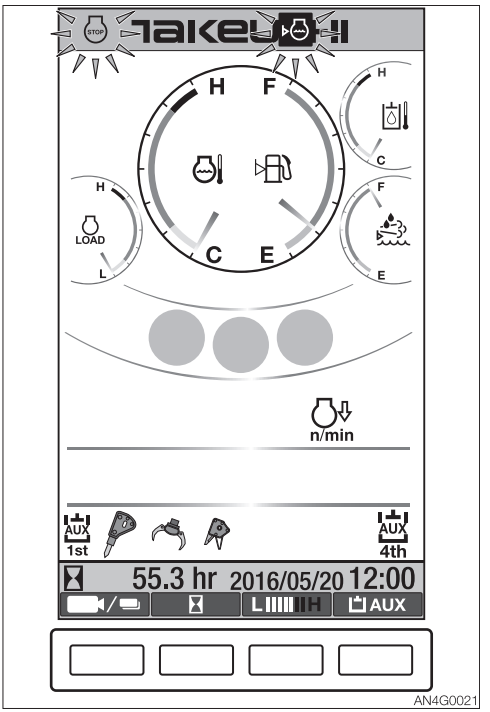

Inspect the coolant level by checking the coolant level warning lamp on the multi information display.
Refer to “4. Coolant level warning lamp” on page 2-21.
If the lamp is flashing, add the coolant.

Replenishing

Note: Use only clean water (soft water) to replenish the cooling water loss due to evaporation. Use coolant (antifreeze) and clean water (soft water) of the specified mixing ratio to replenish the cooling water loss due to leaking.

<Applicable machine models 514600636 or later>

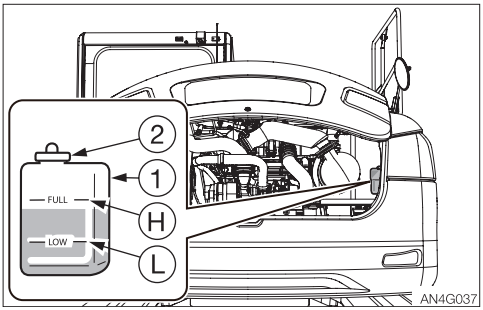

<Applicable machine models 514700252 or later>

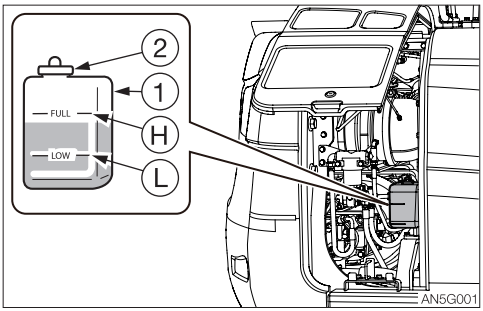

1. Remove the cap (2) of the reserve tank (1).

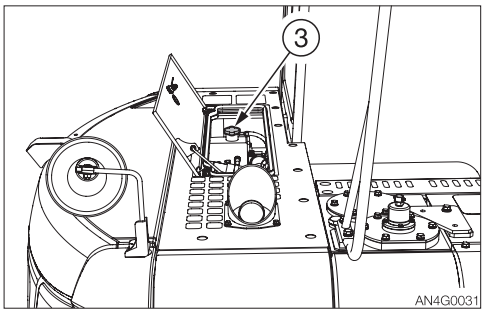

2. Add cooling water up to the upper limit (H) of the reserve tank (1).
   If the reserve tank (1) is found empty at the inspection, check for water leakage and then the water level in the radiator (3). Add water to the radiator (3) as required, and then to the reserve tank (1).
3. Install the cap (2).

<Low noise package>

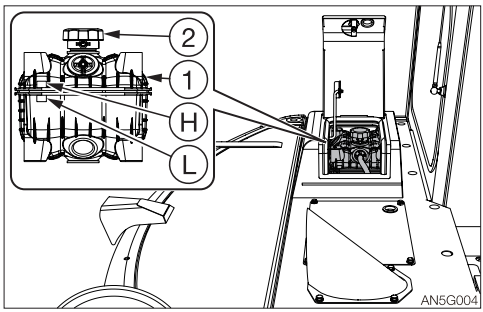

1. Remove the cap (2) of the expansion tank (1).
2. Add cooling water up to the upper limit (H) of the expansion tank (1).
3. Install the cap (2)

INSPECTING AND REPLENISHING THE ENGINE OIL

⚠ WARNING

- **Be sure to stop the engine before performing the inspection and maintenance.**
- **The parts of the machine are hot immediately after the engine is stopped. Be careful not to burn yourself.**
- **Be aware of the high-temperature engine oil. You could burn yourself with it.**

Inspection

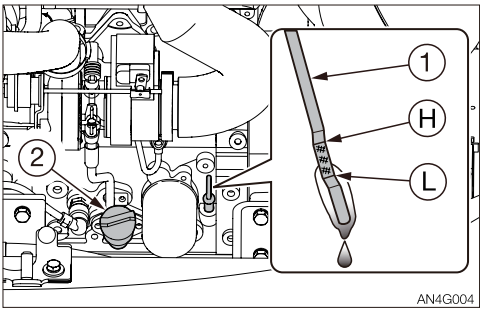

1. Open the engine hood.
2. Take out the dipstick (1) and wipe off the oil with a rag.
3. Fully insert the dipstick (1) again, and then pull it out.
4. Check the oil left on the dipstick (1).
   The level should be between the upper limit (H) and the lower limit (L).
   If it is below the lower limit (L), replenish.

Replenishing

1. Open the engine hood.
2. Remove the oil filler cap (2).
3. Add oil up to between the upper limit (H) and the lower limit (L) of the dipstick (1).
   Problems could arise if the oil level is either too low or too high.
4. Tighten the oil filler cap (2).
5. Perform the engine warm-up procedure. (When the engine oil temperature is lower than 80°C)
6. Park the machine on a level ground and wait for five minutes. Inspect the oil level again while the engine oil is still warm.

CLEANING THE DUST SCREEN

⚠ WARNING

Stop the engine and allow each part of the machine to cool down before performing maintenance.

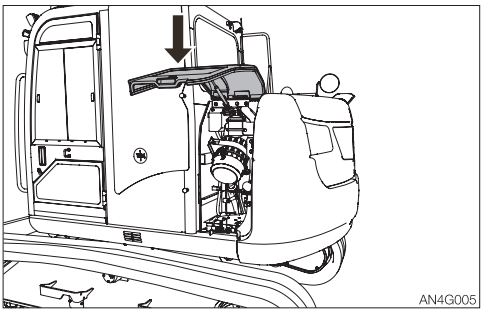

1. Open the left side cover.
2. Inspect if any dirt or bugs are on the dust screen.
3. Clean the dust screen.

INSPECTING THE PRE-FUEL FILTER AND DRAINING

⚠ WARNING

- Do not smoke or permit open flames while handling fuel or working on the fuel system.
- Stop the engine in a well-ventilated place and allow it to cool down before performing maintenance.
- Clean up spilled fuel immediately.

Inspection

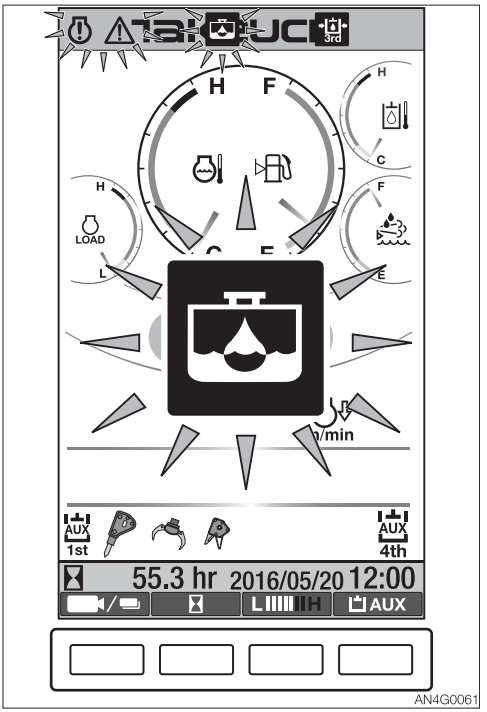

1. Turn the starter switch to the ON position.
2. Inspect the water separator warning lamp.
3. If the warning lamp is flashing, drain the water.

Draining

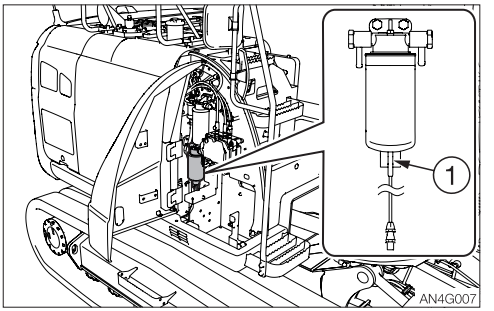

1. Turn the starter key to the OFF position to stop the engine.
2. Open the front cover (for maintenance).
3. Remove the electric wiring.
4. Place a pan for catching fuel under the drain valve (1).
5. Loosen the drain valve (1) to drain water until the pure fuel comes out.
6. Tighten the drain valve (1).
   Tightening torque: 1.6±0.3 N·m (1.2±0.2 ft-lb)
7. Install the electric wiring.

INSPECTING THE FUEL LEVEL

⚠ WARNING

- Never jump down from the machine. Use the steps and handrails when climbing up and down the machine, and always support your body at three points with your hands and feet.
- Do not smoke or permit open flames while handling fuel or working on the fuel system.
- Never remove the fuel cap or add fuel when the engine is running or still hot. Do not spill fuel on the hot surface of the machine.
- Fill the fuel tank in a well ventilated place.
- Clean up spilled fuel immediately.
- Do not fill the fuel tank to capacity. Allow room for oil expansion.
- Securely tighten the fuel filler cap.
- Use the correct grade of fuel for the operating season.

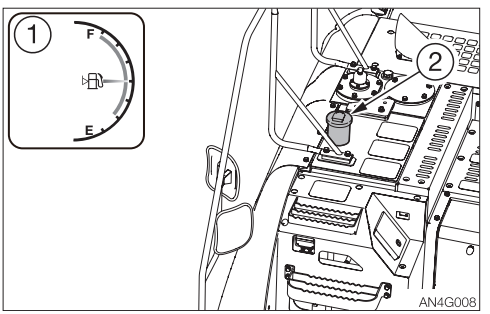

1. Check the fuel level using the fuel gauge (1).
   F: Full
   E: Empty
2. If the level is low, add fuel from the fuel port (2) while watching the fuel gauge (1). Refer to “Fuel filler port” on page 2-6.

INSPECTING THE HYDRAULIC OIL TANK LEVEL AND REPLENISHING

⚠ WARNING

- **Before performing maintenance on the top of the machine, clean the place you will work on and observe the following to prevent falling.**
  - **· Do not spill oil or grease.**
  - **· Do not leave tools scattered around.**
  - **· Watch your step when walking.**
- **Never jump down from the machine. Use the steps and handrails when climbing up and down the machine, and always support your body at three points with your hands and feet.**
- **Oil may spurt out if caps or filters are removed or pipes are disconnected before releasing the pressure in the hydraulic system.**
  - **· Press the air breather button to relieve the internal pressure from the tank.**

Inspection

The oil level changes with the oil temperature. Inspect the oil by maintaining the machine posture as shown in the figure.

- Machine posture for inspecting the hydraulic oil level

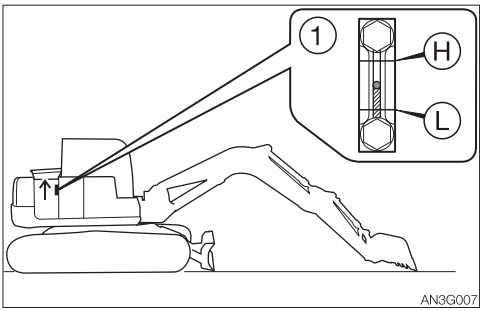

1. Start the engine and run it at low speed.
2. Fully retract the cylinders (arm and bucket), and lower the bucket to the ground.
3. Lower the dozer blade, and then stop the engine.
4. Open the right side cover.
5. Inspect the oil level using the sight gauge (1).
   - · When the oil temperature is about 20°C (68°F):
     The level should be between the upper limit (H) and the lower limit (L).
     If it is below the lower limit (L), replenish.
   - · When the oil temperature is about 50 to 80°C (122 to 176°F):
     The level should be slightly below the upper limit (H).

Replenishing

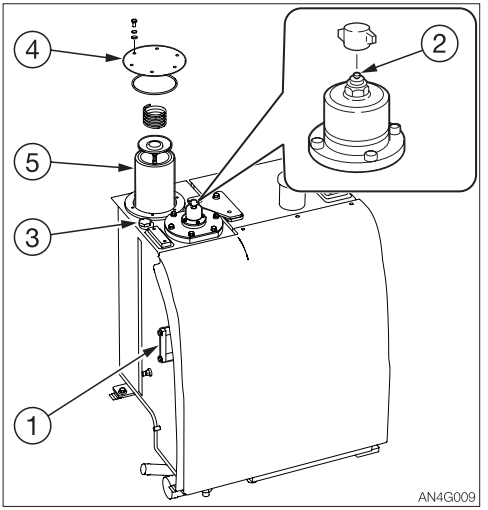

IMPORTANT: Do not fill up to the level higher than the upper limit (H). It will damage the hydraulic circuits or result in oil spurting. If accidentally done, stop the engine and wait the hydraulic oil to cool, and then let the excessive oil to drain from the drain plug.

1. Remove the air breather cap and press the button (2) to relieve the internal pressure from the tank
2. Remove the plug (3).
3. Add the hydraulic oil up to the middle of the sight gauge (1).
4. Tighten the plug (3).

INSPECTING AND CLEANING THE AIR CLEANER

⚠ WARNING

- **Stop the engine and allow the machine to cool down before performing maintenance.**
  - **The engine, muffler, radiator and many other parts of the machine are hot immediately after the engine is stopped. Touching it will cause burns.**
- **Wear required appropriate equipment such as protective goggle and filter mask when using compressed air, as metal fragments or other objects can fly and cause serious injury.**

IMPORTANT: Be careful not to scratch the element. Do not use an element if it is damaged.
IMPORTANT: When operating the machine in very dusty places, perform inspection and maintenance operations every day.
IMPORTANT: Be sure to install the element and dust cap securely. If not, dust could be drawn into the cylinder, damaging the engine.

Inspection

1. Turn the starter switch to the ON position.
2. Check the air cleaner warning lamp.
3. Clean the air cleaner if the warning lamp is flashing.
   If it is extremely dirty, replace the air cleaner element.
   Refer to “Replacing the air cleaner element” on page 5-61.

Cleaning the air cleaner

1. Open the left side cover.

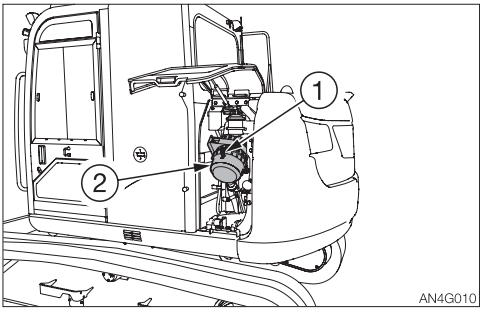

<Low noise package>

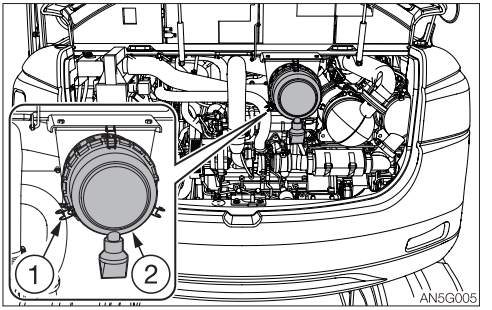

2. Loosen the clamps (1) and remove the dust cup (2).

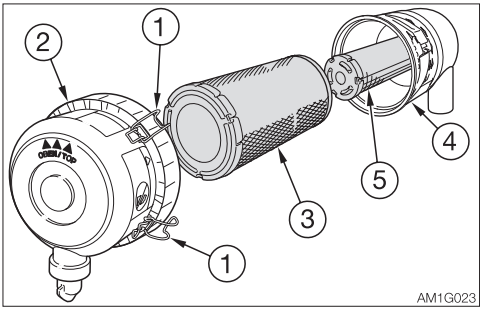

3. Clean the inside of the dust cup (2).
4. Remove the primary element (3).
   To prevent dirt from getting inside the engine, do not remove the secondary element (5).
5. Clean the inside of the body (4).

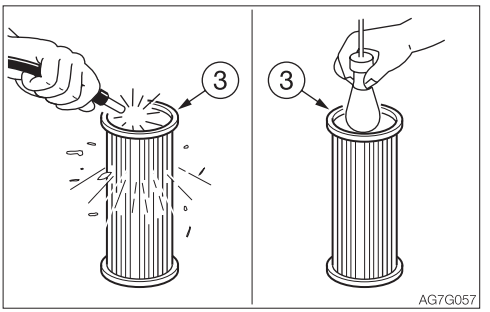

6. Clean the primary element (3) with dried compressed air (500 kPa/72.5 psi or less). First blow the air from the inside of the element along the pleats. Then blow the air from the outside and finally from the inside again.
7. Light up the inside of the primary element (3) with a light bulb, inspect it, and replace it if there are small holes or thin spots.
8. Install the primary element (3).
9. Install the dust cup (2) with its "▲▲▲ OBEN/TOP" mark facing up, and then fasten it with the clamps (1).

LUBRICATING THE WORKING EQUIPMENT

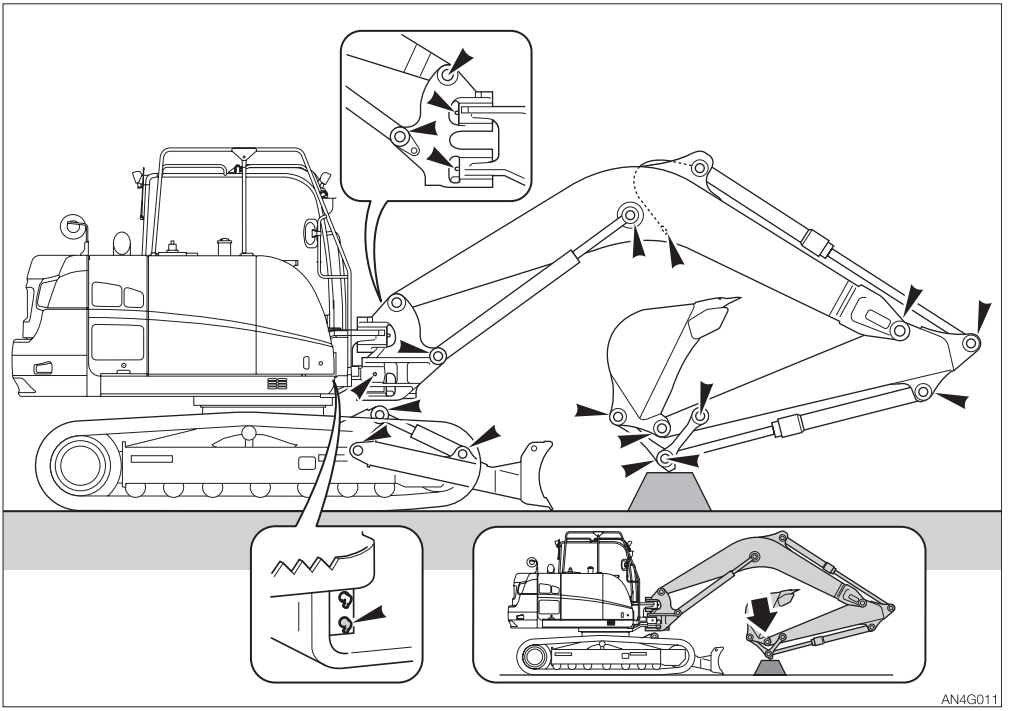

1. Keep the machine configuration for greasing as shown in the diagram above.
   To insure an easy greasing to the boom bracket vertical axis pin, let the tip of the attachment softly press the base.
2. Stop the engine.
3. Use the grease gun to lubricate the grease fittings.
4. Wipe off the excess grease.

CHECKING THE DEF/ADBLUE® LEVEL AND REFILLING

⚠ WARNING

- When removing the cap from the DEF/AdBlue® tank, take care not to inhale steam.
- Do not put anything else other than DEF/AdBlue® solution in the DEF/AdBlue® tank. Putting liquids, particularly light oil or gasoline, in the tank could cause a fire or damage the SCR system. If this is accidentally done, contact a Takeuchi service dealer.

⚠ CAUTION

- DEF/AdBlue® is a colorless, transparent, odorless and non-hazardous aqueous solution (32.5% urea, 67.5% water, freezes at –11°C), and is harmless to the human body. In very rare cases, however, inflammation could occur in some people, and thus proper actions should be taken as follows.
- If skin contact occurs, flush with water. If there are changes in the skin condition or if there is pain, immediately seek medical attention.
- If accidentally swallowed, drink one or two glasses of water or milk and immediately seek medical attention.
- If eye contact occurs, immediately flush with a large amount of clean water and seek medical attention.

IMPORTANT:

- Do not use expired DEF/AdBlue® solution (including solution left in the tank) stored for a long period. Doing so could cause ammonia slip, degraded NOx conversion efficiency or device damage.
- When handling DEF/AdBlue®, do not use anything such as cotton work-gloves whose fibers could get into the solution. Doing so could cause clogging of the DEF/AdBlue® filter or urea deposit at the DM injection port.
- When refilling, be sure to use DEF/AdBlue® conforming to ISO 22241. Do not dilute it or mix it with other chemicals.
- When removing the cap from the DEF/AdBlue® tank, take care not to allow any soil or dirt to enter the tank. Otherwise, the SCR system could fail.
- Do not overfill the tank with DEF/AdBlue® or top off the tank while the engine is running. Doing so could cause the solution to leak from the breather and to freeze. The frozen solution could damage the sensor.
- Do not stand on top of the DEF/AdBlue® tank or piping, and do not put things on them. Doing so could damage them.
- Wipe off any spill of DEF/AdBlue® and rinse it off with water.
- A dry white powder of DEF/AdBlue® may be deposited around the refill port. Wipe it off so that the powder does not enter the tank.
- If DEF/AdBlue® is added while the engine is running or the starter switch is ON, it takes a long time for the level of the DEF/AdBlue® solution to reach the correct level.

Checking the level

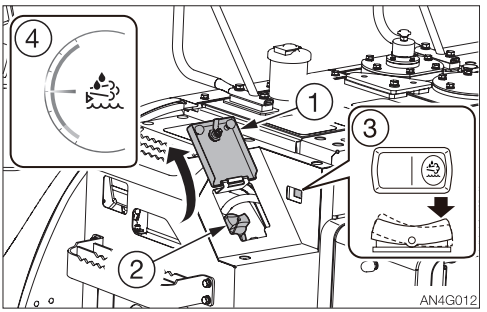

Use the DEF/AdBlue® level indicator (4) to check the amount of the DEF/AdBlue® solution remaining.

F: Tank is full.
E: Tank is empty.

Refilling

1. Turn the starter key to the OFF position to stop the engine.
2. Insert the starter key and turn it counterclockwise to unlock the cover (1).
3. Turn the DEF/AdBlue® tank cap (2) counterclockwise and remove it.
4. Press the DEF/AdBlue® symbol side of the refill switch (3) to refill while the buzzer is sounding.
   (The corresponding switch lamp lights up or flashes in conjunction with the buzzer.)
   Buzzer keeps sounding: 100%
   Buzzer sounds at intervals of 0.6 seconds: 80 to 100%
   Buzzer sounds at intervals of 2 seconds: Under 80%
   Buzzer sounds at intervals of 0.3 seconds: Failure
   Upon completion of refilling, press the refill switch (3) again to stop the buzzer sounding. (The buzzer automatically stops sounding after 20 minutes.)
5. Install the DEF/AdBlue® tank cap (2) on the filler port, and then turn the cap clockwise to close.
6. Close the cover (1) and lock it.

Notes:
- If any solution other than DEF/AdBlue® is used, the warning lamp lights up and the buzzer sounds. Refer to “8. DEF/AdBlue® quality indicator lamp” on page 2-23.
- The engine speed is limited if the DEF/AdBlue® solution is insufficient. Running the engine with insufficient DEF/AdBlue® causes the engine to idle.
- If the tank is faulty, please contact a Takeuchi service dealer for advice.

When DEF/AdBlue® is low or the tank is empty:
Corresponding to the DEF/AdBlue® level in the tank, the warning lamp lights up or flashes. Also, the engine output and RPM are limited.
To refill the tank under these conditions, refer to “Restarting when the DEF/AdBlue® level is low or the tank is empty” on page 6-12.

AFTER THE INITIAL 50 HOURS (ONLY FOR NEW MACHINES)

REPLACING THE HYDRAULIC OIL RETURN FILTER

⚠ WARNING

- Stop the engine and allow each part of the machine to cool down before performing maintenance.
  - The engine, the hydraulic system and many other parts of the machine are hot immediately after the engine is stopped. Touching these parts will cause burns.
  - The hydraulic oil is also hot and under high pressure.
    Be careful not to touch the hydraulic oil when loosening the cap or plug. Working on the machine under these conditions could result in burns or injuries due to the hot oil spurting out.
- Before performing maintenance on the top of the machine, clean the place you will work on and observe the following to prevent falling.
  - Do not spill oil or grease.
  - Do not leave tools scattered around.
  - Watch your step when walking.
- Never jump down from the machine. Use the steps and handrails when climbing up and down the machine, and always support your body at three points with your hands and feet.
- Oil may spurt out if caps or filters are removed or pipes are disconnected before releasing the pressure in the hydraulic system.
  - Press the air breather button to relieve the internal pressure from the tank.
  - When removing plugs or screws, or when disconnecting hoses, stand to the side and loosen them slowly to gradually release the internal pressure before removing.

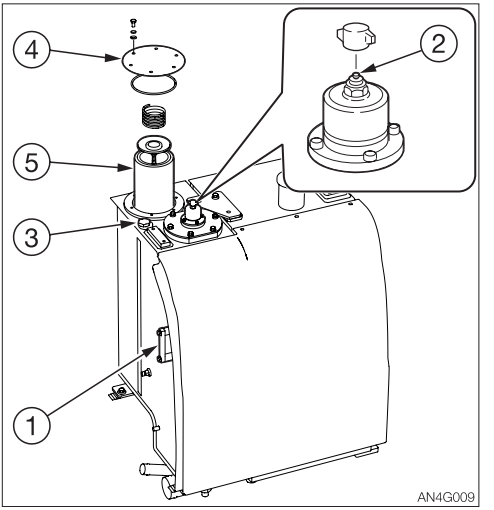

1. Press the air breather button (2) to relieve the internal pressure from the tank.
2. Loosen the bolts and remove the flange (4).
3. Remove the return filter (5).
4. Install a new return filter.
5. Install the flange (4) on its original position.
6. Inspect the level with the sight gauge (1), and replenish if the level is too low.
   Refer to “Inspecting the hydraulic oil tank level and replenishing” on page 5-28.

REPLACING THE PILOT LINE FILTER

⚠ WARNING

- Stop the engine and allow each part of the machine to cool down before performing maintenance.
  - The engine, the hydraulic system and many other parts of the machine are hot immediately after the engine is stopped. Touching these parts will cause burns.
  - The hydraulic oil is also hot and under high pressure immediately after the engine is stopped. Be careful not to touch the oil when loosening the cap or plug. Working on the machine under these conditions could result in burns or injuries due to the hot oil spurting out.
- Oil may spurt out if caps or filters are removed or pipes are disconnected before releasing the pressure in the hydraulic system.
  - Press the air breather button to relieve the internal pressure from the tank.
  - When removing plugs or screws, or when disconnecting hoses, stand to the side and loosen them slowly to gradually release the internal pressure before removing.

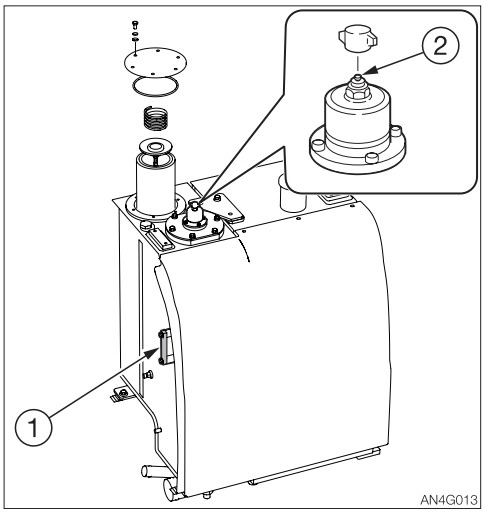

1. Press the air breather button (2) to relieve the internal pressure from the tank.

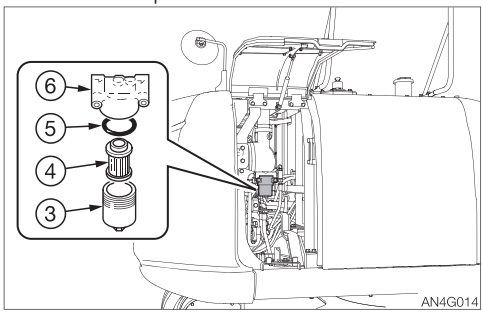

2. Open the right side cover.
3. Turn the case (3) counterclockwise and remove it.
4. Remove the element (4) and O-ring (5).
5. Clean the inside of the case (3).
6. Apply a thin layer of oil on the O-ring of the new filter.
7. Install the new element on the filter stand (6).
8. Apply a thin layer of oil on the new O-ring (5).
9. Install the new O-ring (5) and the case (3) on the filter stand (6).
   Tightening torque: 78.5±4.9 N·m (57.9±3.6 ft-lb)
10. Inspect the level with the sight gauge (1) and replenish if the level is too low.
    Refer to “Inspecting the hydraulic oil tank level and replenishing” on page 5-28.

INSPECTING AND ADJUSTING THE COMPRESSOR BELT (AC)

⚠ WARNING

- **Stop the engine and allow the machine to cool down before performing maintenance.**
  - **The engine, muffler, radiator, hydraulic lines, sliding parts and many other parts of the machine are hot immediately after the engine is stopped. Touching these parts will cause burns.**
- **The high-pressure pipes of the air conditioner can be very hot (80 to 120°C or 176 to 248°F). Be careful not to burn yourself.**

IMPORTANT: Do not let any oil or grease get on the belt. It will cause the belt to slip, decrease the cooling capacity or shorten the service life of the air conditioner.

If the belt is too slack, it will slip and vibrate, resulting in decreased cooling capacity. The service life of the air conditioner also will be shortened. Adjust the belt tension to the standard value (approximately 8 mm or 0.31 in).

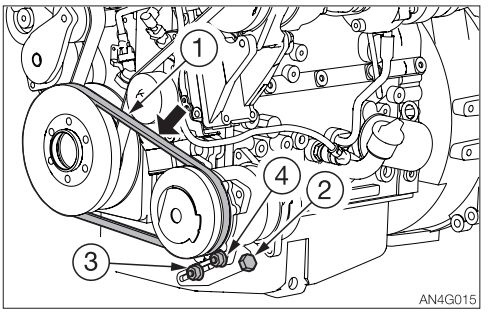

Inspection

1. Open the engine hood.
2. The belt tension is normal if the belt tension gauge indicates the following value.
   400±50 N (90±11 lbf)

Adjustment

If the belt tension is not normal, adjust it with the adjuster bolt (2).

1. Loosen the locking nuts (3) and (4).
2. Turn the adjuster bolt (2) as follows.
   - Tighten: Clockwise
   - Loosen: Counterclockwise
3. Tighten the locking nuts (3) and (4) after adjustment.

Note: When replacing with a new belt, run the engine at low idle speed for about 15 minutes to break in the new belt, and then adjust the tension again.
The belt tension must be adjusted as follows:
650±50 N (146±11 lbf)

Replacing

Replace the belt in the following cases:

- There are cuts or cracks.
- The belt is worn and touches the bottom of the V groove in the pulley.
- The belt stretched too loose to be adjusted.

EVERY 50 HOURS

INSPECTING AND ADJUSTING THE CRAWLER TENSION

⚠ WARNING

- **If you must work beneath the raised machine or working equipment, always use wood blocks, jack-stands or other rigid and stable supports. Never get under the machine or working equipment if they are not sufficiently supported. This procedure is especially important when working on hydraulic cylinders.**
- **Be careful with the high-pressure grease In the track adjuster, the grease has been injected under high pressure. If the tension is adjusted without following the prescribed procedure, the grease discharge valve may fly off, resulting in injury.**
  - **Never loosen the grease fitting.**
  - **Loosen the grease discharge valve slowly. Do not turn it more than 1 turns.**
  - **Do not put your face, arms, legs or body in front of the grease discharge valve.**
  - **If grease does not come out when the grease discharge valve is loosened, the valve is faulty. Ask a Takeuchi service agent for repair.**

Inspection

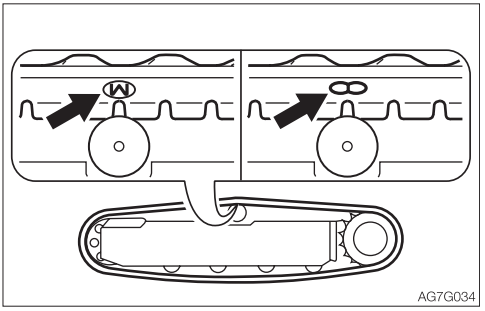

1. For rubber crawlers, move the machine so that the “M” or “∞” mark at the joint is at the top center of the crawler frame.

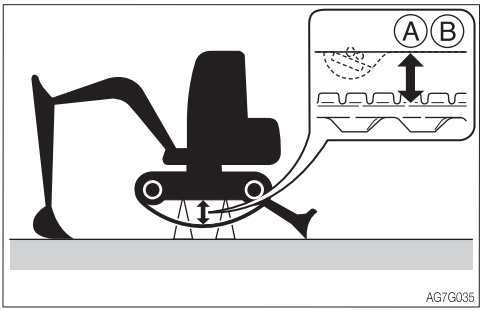

2. Use the working equipment to lift the machine body. Operate the levers slowly.

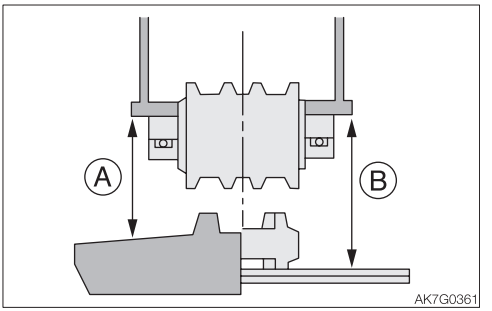

3. Inspect the gap (A or B) between the bottom surface of the frame at the center of the crawler frame and the top surface of the crawler.
   The gap (A or B) must be within the following range:

   (A) Rubber crawler
   155 to 165 mm (6.1 to 6.5 in.)
   (B) Steel crawler
   250 to 280 mm (9.8 to 11 in.)
   (B) Segmental rubber crawler
   235 to 265 mm (9.3 to 10.5 in.)

Adjustment
Increasing the tension

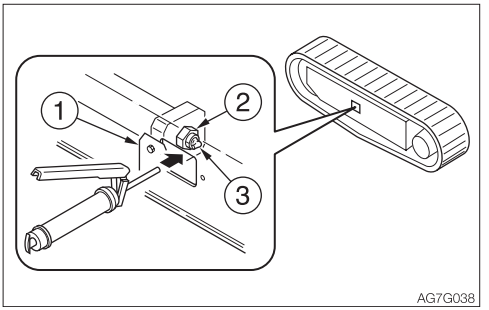

1. Remove the cover (1).
2. Using the grease gun, insert grease through the grease fitting (3) in the grease discharge valve (2).
3. Inspect the crawler tension.

Decreasing the tension

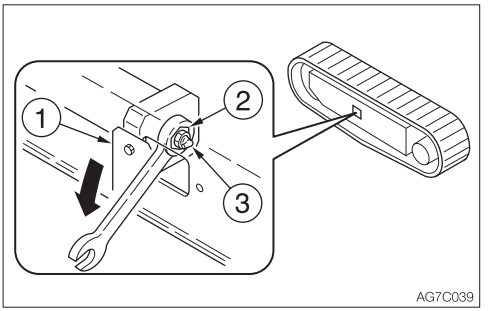

1. Remove the cover (1).
2. Using the spanner, slowly loosen the grease discharge valve (2) (one turn) and drain the grease.
   If the grease does not drain easily, move the machine forward or backward.
3. Tighten the grease discharge valve (2).
   · Tightening torque: 59 to 88 N·m (43.4 to 65.1 ft-lb.)

DRAINING THE WATER FROM THE FUEL TANK

⚠ WARNING

- **Before performing maintenance on the top of the machine, clean the place you will work on and observe the following to prevent falling.**
  - **Do not spill oil or grease.**
  - **Do not leave tools scattered around.**
  - **Watch your step when walking.**
- **Never jump down from the machine. Use the steps and handrails when climbing up and down the machine, and always support your body at three points with your hands and feet.**
- **Do not smoke or permit open flames while handling fuel or working on the fuel system.**
- **Never remove the fuel cap or add fuel when the engine is running or still hot. Do not spill fuel on the hot surface of the machine.**
- **Fill the fuel tank in a well ventilated place.**
- **Do not fill the fuel tank to capacity. Allow room for oil expansion.**
- **Clean up spilled fuel immediately.**
- **Securely tighten the fuel filler cap.**
- **Use the correct grade of fuel for the operating season.**

Do the draining operation before starting the machine.

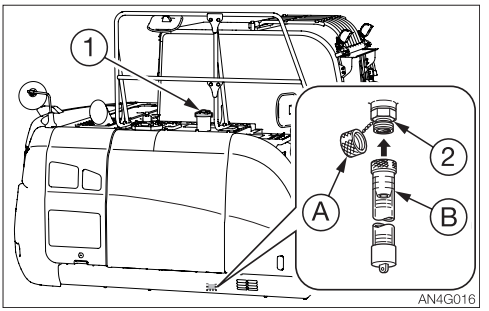

1. Remove the fuel filler cap (1).
2. Place a pan under the drain valve (2).
3. Remove the cap (A), install the connector (B) and then drain water and sludge from the bottom of the tank. (The water comes out once the screw is tightened.)
4. Remove the connector (B) and install the cap (A).
5. Add fuel.
6. Tighten the fuel filler cap (1) and lock it.
7. Bleed air.

Bleeding air from the fuel system

Refer to “Bleeding air from the fuel system” on page 6-11.

Note: Air in the fuel system causes the engine to fail to start or to have problems. Bleed air when the fuel tank is emptied, using the same procedure above.

INSPECTING THE BATTERY FLUID LEVEL AND REPLENISHING

⚠ DANGER

- Do not use the battery when the fluid level is below the lower level limit. Doing so will hasten the deterioration of the internal portions of the battery and shorten the battery life. It also can cause rupturing (explosion).
- Batteries generate flammable hydrogen gas which may explode. Keep away from flame, sparks, fire or lighted cigarettes.
- Use a dampened cloth to clean above the fluid level line and check the fluid level. Do not clean with a dry cloth; otherwise it can cause static electricity to build up, resulting in ignition or explosion.
- Do not use the cable if it's connecting terminal is loose or corroded. If used, ignition or explosion may occur.

⚠ WARNING

- Wear protective goggle and clothing when working with batteries.
- Do not add the distilled water above the upper level limit. Doing so could cause the fluid to leak. This fluid can cause skin damage if contacted, or can cause the machine components to corrode.
- Batteries contain sulfuric acid which will damage eyes or skin if contacted.
  - If eye contact occurs, flush immediately with clean water and get prompt medical attention.
  - If accidentally swallowed, drink large quantities of water or milk and call a physician immediately.
  - If acid contacts skin or clothing, wash off immediately with a lot of water.

Inspection

Turn the starter switch to ON and check the battery voltage on the display. The battery is normal if the voltage is 24 V or more.
Refer to "(4) Data display" on page 2-35.

IMPORTANT: Check the fluid level of all cells following the steps below, even when the fluid level can be checked using the indicator.
IMPORTANT: The SCR system operates for up to two minutes after the starter switch is turned to the OFF position. When removing the batteries or electrical connectors for inspection or maintenance, wait for at least two minutes after the starter switch is turned to the OFF position. Otherwise, the system could fail.

Note: Under normal operating conditions, the maintenance-free battery does not require addition of water because of the special plate designed to minimize fluid loss. However, for those machines that are heavily used or operated under severe conditions (for example, in high ambient temperature), the fluid level often becomes low. If that is the case, check the fluid level of the maintenance-free battery and add water as needed.

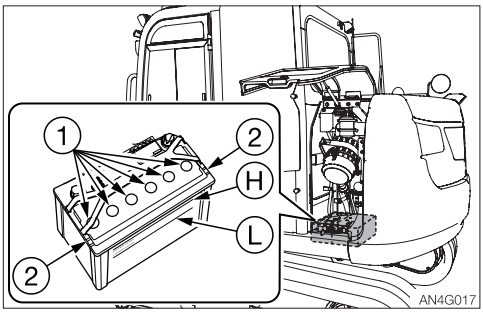

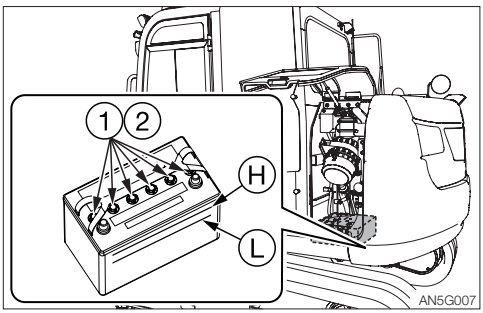

1. Open the left side cover.
2. Inspect the fluid level.
   The fluid level must be between the upper level line (H) and lower level line (L). If not, add distilled water up to the line (H).
3. Check the battery terminal for looseness, dirt and corrosion.
4. Check the exhaust holes (2) for dirt.
5. Check the battery voltage. Confirm it is 24 V or more.
   Refer to “(4) Data display” on page 2-35.

Replenishing

1. Loosen the sealing plugs (1) and add distilled water up to the highest level line (H).
2. Securely tighten the sealing plugs (1).

MEMO

AFTER THE INITIAL 250 HOURS (ONLY FOR NEW MACHINES)

REPLACING THE SLEW MOTOR GEAR OIL

⚠ WARNING

- Stop the engine and allow each part of the machine to cool down before performing maintenance.
  - The slew motor is hot immediately after the engine is stopped. Touching it will cause burns.
  - The gear oil is also hot and under high pressure immediately after the engine is stopped.
    Be careful not to touch the oil when loosening the plug. Working on the machine under these conditions could result in burns or injuries.
- When performing maintenance on the machine, clean up the foot area and strictly observe the following so as not to fall:
  - Do not spill oil or grease.
  - Do not leave tools scattered around.
  - Watch your step when walking.
- Never jump down from the machine. Use the steps and handrails when climbing up and down the machine, and always support your body at three points with your hands and feet.
- The pressure in the reduction gear case of slew motor may cause oil or the cap to fly out. Loosen the cap slowly to release the pressure.

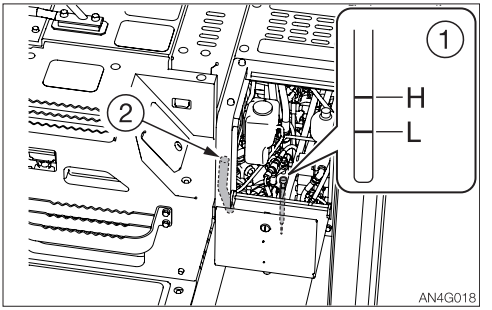

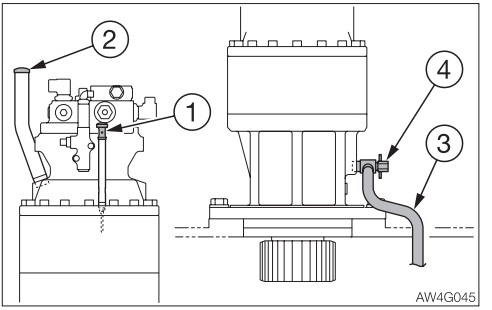

1. Remove the cap (2).
2. Place a pan under the hose (3) to catch the waste oil.
3. Loosen the drain valve (4) and drain the oil.
4. Tighten the drain valve (4).
5. Add oil up to the upper limit (H) of the level gauge (1).
   Problems could arise if the oil level is either too low to too high.
6. Tighten the cap (2).

REPLACING THE TRAVEL MOTOR GEAR OIL

⚠ WARNING

- **Stop the engine and allow the machine to cool down before performing maintenance.**
  - **The travel motor is hot immediately after the engine is stopped. Touching it will cause burns.**
  - **The gear oil is also hot and under high pressure immediately after the engine is stopped. Be careful when loosening the plugs. Working on the machine under these conditions could result in burns or injuries.**
- **The pressure in the reduction gear case of travel motor may cause oil or the plug to fly out. Loosen the plug slowly to release the pressure.**

IMPORTANT: If the percentage of the traveling time within the total operating time is high, replace the gear oil earlier than the specified time.

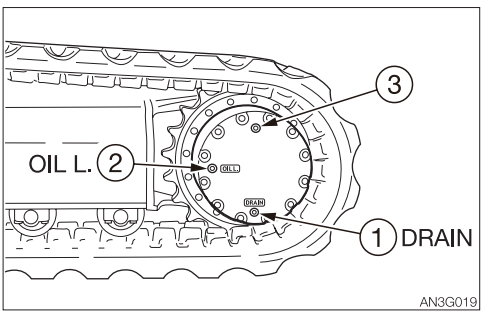

1. Set the travel motor so that plug (1) is at the very bottom.
2. Place a pan under the plug (1).
3. Remove the plugs (1), (2) and (3) and drain the oil.
4. Rewrap the plugs with new sealing tape.
5. Tighten the plug (1).
   - Tightening torque: 98 N·m (72.3 ft-lb.)
6. Add oil through the hole of the plug (3) until oil flows out of the hole of the plug (2).
7. Tighten the plugs (2) and (3).
   - Tightening torque: 98 N·m (72.3 ft-lb.)

EVERY 250 HOURS

INSPECTING THE SLEW MOTOR GEAR OIL

⚠ WARNING

- Stop the engine and allow each part of the machine to cool down before performing maintenance.
  - The slew motor is hot immediately after the engine is stopped. Touching it will cause burns.
  - The gear oil is also hot and under high pressure immediately after the engine is stopped.
    Be careful not to touch the oil when loosening the plugs. Working on the machine under these conditions could result in burns or injuries.
- When performing maintenance on the machine, clean up the foot area and strictly observe the following so as not to fall:
  - Do not spill oil or grease.
  - Do not leave tools scattered around.
  - Watch your step when walking.
- Never jump down from the machine. Use the steps and handrails when climbing up and down the machine, and always support your body at three points with your hands and feet.
- The pressure in the reduction gear case of slew motor may cause oil or the plug to fly out. Loosen the plug slowly to release the pressure.

Inspection

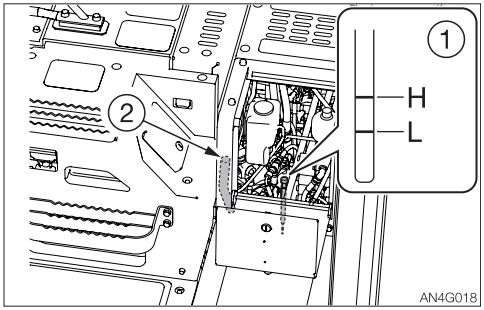

1. Take out the level gauge (1) and wipe off the oil with a rag.
2. Fully insert the level gauge (1) again, and then pull it out.
3. Check the oil left on the level gauge (1).
   The level should be between the upper limit (H) and the lower limit (L).
   If it is below the lower limit (L), replenish.

Replenishing

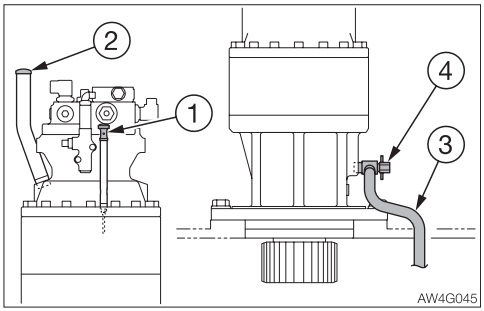

1. Remove the oil filler cap (2).
2. Add oil up to between the upper limit (H) and the lower limit (L) of the level gauge (1).
   Problems could arise if the oil level is either too low or too high.
3. Tighten the oil filler cap (2).

CLEANING THE COOLER FINS

⚠ WARNING

Wear required appropriate equipment such as protective goggle and filter mask when using compressed air, as metal fragments or other objects can fly and cause serious injury.

IMPORTANT: Be careful not to damage the fins when cleaning.

- **When using compressed air or pressurized water, make sure the pressure is no higher than 200 kPa (28 psi) and hold the nozzle sufficiently away from the fins.**

IMPORTANT: When using water, cover the electrical system to prevent water from getting in.

IMPORTANT: When operating the machine in very dusty places, perform inspection and maintenance operations every day.

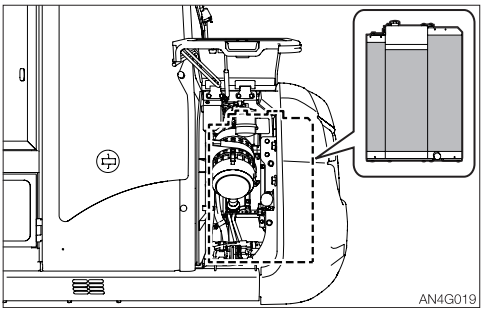

1. Open the left side cover and the engine hood.
2. Blow compressed air on the fins to remove mud and dirt stuck on them.

INSPECTING AND ADJUSTING THE COMPRESSOR BELT (AC)

Refer to “Inspecting and adjusting the compressor belt (AC)” on page 5-38.

CLEANING THE AIR FILTERS (AC)

⚠ WARNING

Wear required appropriate equipment such as protective goggle and filter mask when using compressed air, as metal fragments or other objects can fly and cause serious injury.

Clean the filters immediately after operating in dusty places.
If the filters are clogged, the air flow is reduced and a booming sound is heard from the air conditioner unit.

Removing the filters

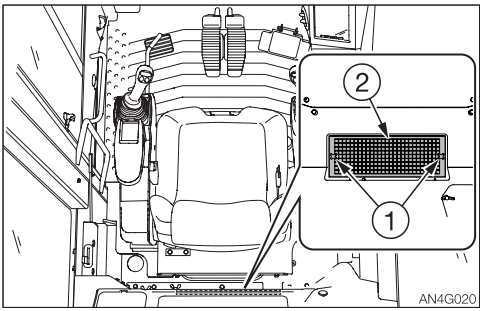

1. Move the seat all the way forward, and then fold down the backrest toward the front.
2. Loosen the knobs (1) and remove the circulation filter (2).
   Circulation filter (2): Part No. 19115-06736

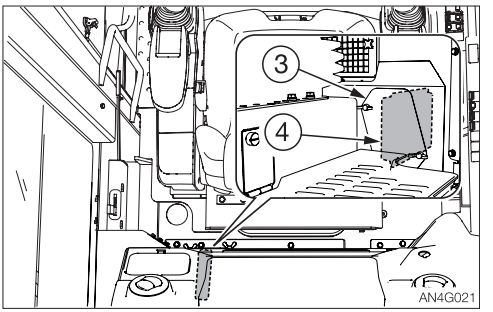

3. Loosen the knobs and remove the cover (3).
4. Remove the ventilation filter (4).
   Ventilation filter (4): Part No. 19115-13680
5. Use compressed air or water to clean the filters, depending on how dirty they are.

Cleaning

1. Blow dry, compressed air (138 kPa or 20 psi or less) directly on the filters from the inside, moving up and down along the pleats.
   Be sure to keep the nozzle at an adequate distance from the filters.
2. Wash the filter with neutral detergent if it is very dirty. Dry the filter completely after washing it.

Replacing

Replace the filter with a new one once a year or if it is still clogged after blow-drying with compressed air and washing.

CLEANING THE CONDENSER (AC)

⚠ WARNING

Wear required appropriate equipment such as protective goggle and filter mask when using compressed air, as metal fragments or other objects can fly and cause serious injury.

IMPORTANT: Be careful not to damage the fins when cleaning.

- **When using compressed air or pressurized water, make sure the pressure is no higher than 200kPa (28 psi) and hold the nozzle sufficiently away from the fins.**

If the condenser is dirty, heat will not discharge properly. Wash dirt off the condenser with water.

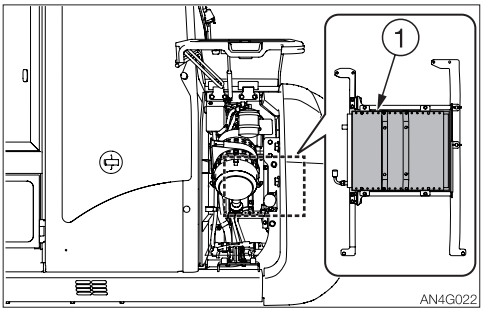

1. Open the left side cover.
2. Clean the condenser (1).

INSPECTING THE REFRIGERANT (GAS) LEVEL (AC)

⚠ WARNING

- **Exposure of the eyes or hands to the cooler's refrigerant could result in blindness or frostbite. Never touch the refrigerant or loosen the parts of the cooling circuit.**
- **Keep flames away if the refrigerant gas is leaking.**
- **The high-pressure pipes of the air conditioner can be very hot (80 to 120°C or 176 to 248°F). Be careful not to burn yourself.**

The cooling capacity decreases if the amount of refrigerant is insufficient. Inspect the refrigerant level using the sight glass (2) on the top of the receiver dryer (1).

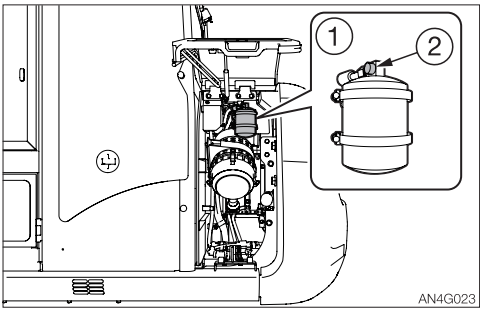

1. Open the left side cover.
2. Inspect the places for the conditions below.

Places for inspection	Conditions
Cab door	Fully open
Temperature control dial	Set fully to the COOL side
Fan speed	High
Ventilation / Circulation select switch	Circulation
Engine speed	Maximum speed
Air conditioner switch	ON

3. Inspect the refrigerant by watching the flow of air bubbles through the sight glass (2).
   Refer to "Check list for refrigerant volume" on page 5-53.
4. Open the engine hood.

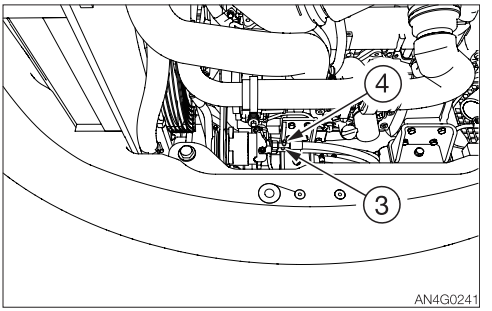

5. Check the temperature of the compressor's high pressure pipe (3) and low pressure pipe (4).
   Refer to "Check list for refrigerant volume" on page 5-53.

Check list for refrigerant volume

Air conditioner	Normal	Abnormal		
High/low pressure pipe temperature	High pressure pipe is hot (80 to 120°C or 176 to 248°F), low pressure pipe is cold (8 to 15°C or 46 to 59°F). Clear difference in temperature between the pipes.	High pressure pipe is warm, low pressure pipe is slightly cool. No significant difference in temperature between the pipes.	Little difference in temperature between the high-pressure pipe and the low-pressure pipe.	High pressure pipe is hot, low pressure pipe is slightly cool. A significant difference in temperature between the pipes.
Pipe connection	Normal	Some places are dirty with oil.	Some places are extremely dirty with oil.	Normal
Sight glass	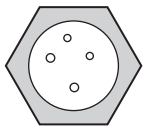 AG7G064 Almost transparent with some bubbles. Fully transparent when the engine speed is increased or decreased.	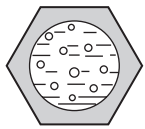 AG7G065 Flow of bubbles can be seen constantly. Sometimes transparent or white with bubbles.	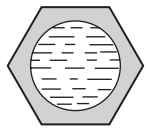 AG7G066 Mist-like flow is faintly visible.	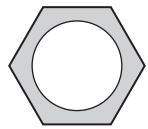 AG7G067 No bubbles is visible, even when the fan is set to High and the engine is idling.
Refrigerant level	Proper level	Refrigerant may be leaking.	Refrigerant has leaked; little is left.	Refrigerant level too high

If the air conditioner is not working
If the air conditioner does not work well, set the fan switch to OFF and contact your sales or service dealer for inspection and/or repairs.

IMPORTANT: Continued use of the air conditioner when it is not working properly will damage its various parts.
IMPORTANT: Using the air conditioner when there is no refrigerant will damage the compressor.
IMPORTANT: Always consult your sales or service dealer for replacing the refrigerant. Be sure to use R134a refrigerant (1800 g or 4 lb.).

EVERY 500 HOURS

LUBRICATING THE SLEW BEARING

⚠ WARNING

Do not slew while lubricating. Doing so is dangerous, as you may get caught in the machine.

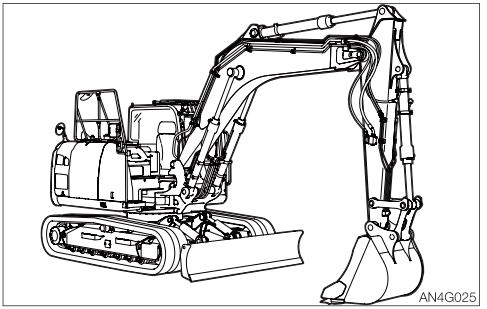

1. Stop the engine with the machine in the posture shown on the figure above.

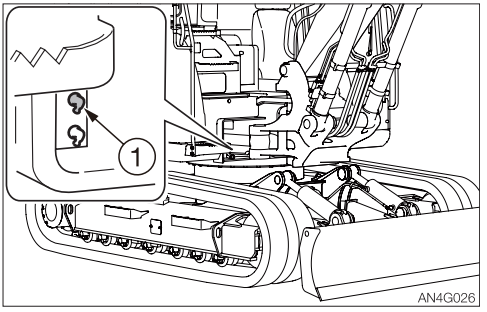

2. Use the grease gun to grease the grease fitting (1).

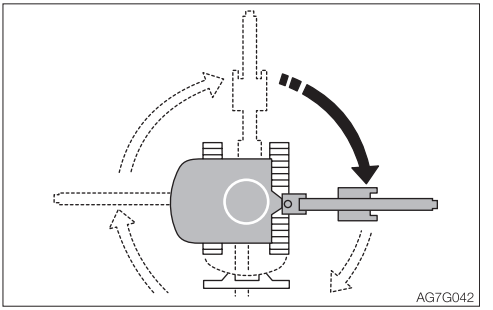

3. Start the engine, lift the bucket and slew clockwise 90°.
4. Lower the bucket to the ground, and then stop the engine.
5. Repeat the steps 2 to 4 above three times.
6. Wipe off the grease expelled from the slew bearing and grease fitting.

REPLACING THE ENGINE OIL AND THE OIL FILTER

⚠ WARNING

- **Be sure to stop the engine before performing the inspection and maintenance.**
- **The parts of the machine are hot immediately after the engine is stopped. Be careful not to burn yourself.**
- **Be aware of the high-temperature engine oil. You could burn yourself with it.**

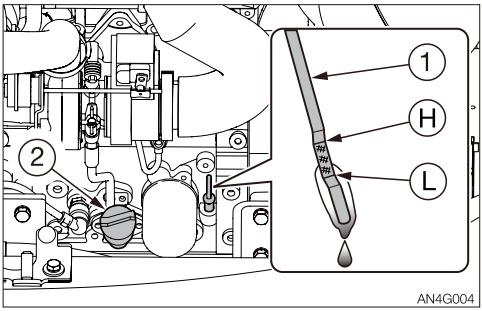

1. Open the engine hood and remove the oil filler cap (2).

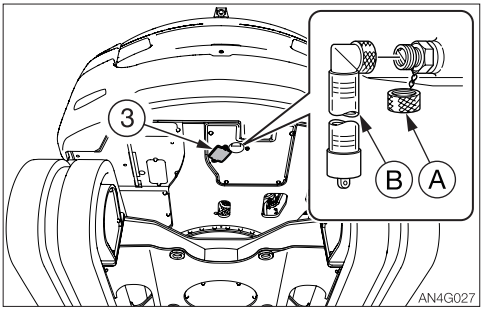

2. Loosen the bolts and remove the under cover (3).
3. Place a pan under the plug to catch the waste oil.
4. Remove the cap (A), install connector (B) and drain the oil. (The oil comes out when the screw is tightened.)
5. Remove the connector (B) and install the cap (A).

IMPORTANT: Check the waste oil for metal powder. If it contains large amount of metal powder, consult your sales or service dealer.

6. Install the under cover (3).

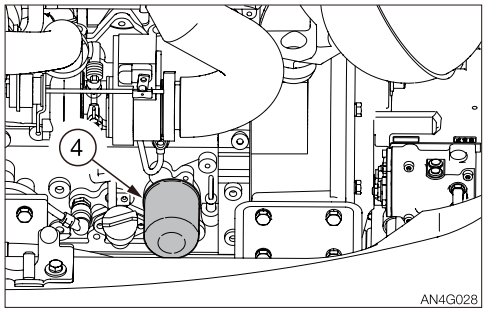

7. Turn the filter (4) counterclockwise with the filter wrench and remove it.
8. Clean the surface on which the filter stand is installed.
9. Apply a thin layer of oil on the packing of the new filter.
10. Install the new filter by hand.
11. Securely tighten the filter with the specified torque after its packing comes in contact with the surface of installation. Tightening torque: 10 to 12 N·m (7.4 to 8.9 ft-lb)
12. Add oil up to between the upper limit (H) and the lower limit (L) of the dipstick (1). Problems could arise if the oil level is either too low or too high.
13. Tighten the oil filler cap (2).
14. Perform the engine warm-up procedure. (When the engine oil temperature is lower than 80°C)
15. Park the machine on a level ground and wait for five minutes. Inspect the oil level again while the engine oil is still warm.

INSPECTING THE CONCENTRATION OF COOLANT ADDITIVE

⚠ WARNING

- **Do not remove the radiator cap or the drain plug when the cooling water is hot. Stop the engine and wait until the engine and the radiator cool before slowly loosening the radiator cap and the drain plug to remove them.**
- **Always wear the protective goggle and gloves when handling coolant (antifreeze). If any coolant (antifreeze) comes in contact with eyes or skin, wash it off with clean water. Otherwise, it could result in injures.**
- **When performing maintenance on the machine, clean up the foot area and strictly observe the following so as not to fall:**
  - **Do not spill oil or grease.**
  - **Do not leave tools scattered around.**
  - **Watch your step when walking.**
- **Never jump down from the machine. Use the steps and handrails when climbing up and down the machine, and always support your body at three points with your hands and feet.**

1. Open the maintenance cover.

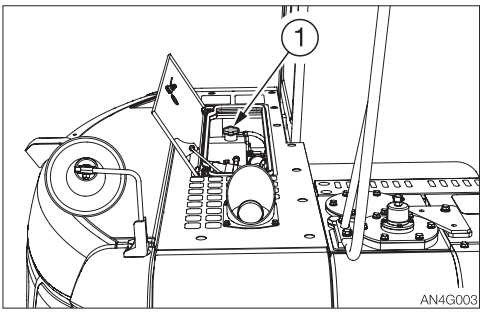

<Low noise package>

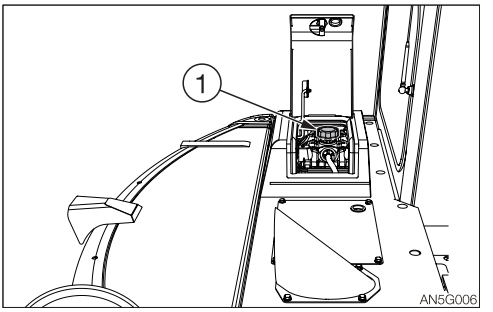

2. Remove the radiator cap or the expansion tank cap (1), and check the concentration of the coolant additive.
3. Adjust the concentration of the coolant additive, as necessary.
4. Install the radiator cap or the expansion tank cap (1).