INSPECTING THE SLEW PINION GEAR

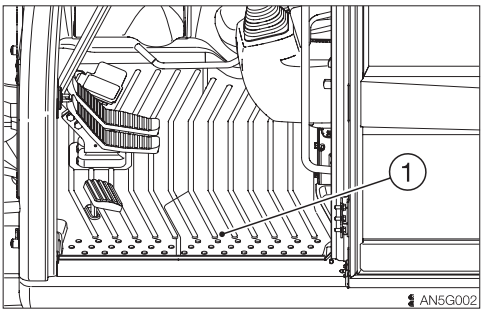

1. Remove the floor mat (1).

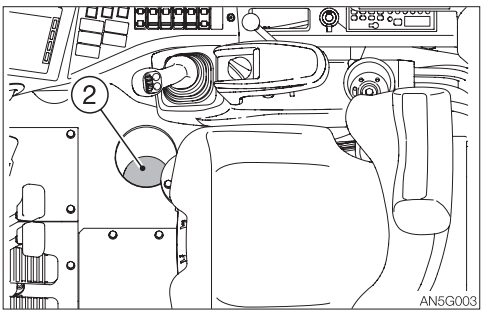

2. Remove the cap (2).
3. Make sure that the gear tooth surface of the slew bearing is well greased.
   If the surface is not adequately greased, add grease.
   If the grease has turned white due to water or mud entered it, replace the whole grease. Consult your sales or service dealer for help.
   Grease full capacity: 12 L (3.2 US gal) or 10.8 kg (24 lbs.)
4. Install the cap (2).
5. Install the floor mat (1).

EVERY 1000 HOURS

REPLACING THE HYDRAULIC OIL RETURN FILTER

Refer to “Replacing the hydraulic oil return filter” on page 5-36.

REPLACING THE PILOT LINE FILTER

Refer to “Replacing the pilot line filter” on page 5-37.

REPLACING THE SLEW MOTOR GEAR OIL

Refer to “Replacing the slew motor gear oil” on page 5-46.

REPLACING THE TRAVEL MOTOR GEAR OIL

Refer to “Replacing the travel motor gear oil” on page 5-47.

REPLACING THE ENGINE COOLING SYSTEM

Replace the coolant after the two-year operation even if the running time is less than 1000 hours.

⚠ WARNING

- **Stop the engine and allow the machine to cool down before performing maintenance.**
  - **The engine, muffler, radiator and many other parts of the machine are hot immediately after the engine is stopped. Touching these parts will cause burns.**
  - **The engine coolant is also hot and under high pressure immediately after the engine is stopped. Be careful when loosening the caps or plugs. Working on the machine under these conditions could result in burns or injuries due to the hot coolant spurting out.**
- **If maintenance must be performed with the engine running, always work as a two person team communicating each other.**
  - **One person must sit in the operator's seat so that he/she can immediately stop the engine when necessary. He/she must take care not to touch the lever or pedal unless necessary.**
  - **The one who performs maintenance must make sure to keep his/her body or clothing away from the moving part of the machine.**
- **Standing at the back of the machine while the engine is running is extremely dangerous, as the machine could move suddenly. Never stand at the back of the machine while the engine is running.**
- **Do not remove the radiator cap or the drain plug when the cooling water is hot. Stop the engine and wait until the engine and the cooling water cool. Then, slowly loosen the radiator cap and the drain plug to remove them.**
- **When performing maintenance on the machine, clean up the foot area and strictly observe the following so as not to fall:**
  - **Do not spill oil or grease.**
  - **Do not leave tools scattered around.**
  - **Watch your step when walking.**
  - **Lower the boom so that the attachment rests on the ground.**
- **Never jump down from the machine. Use the steps and handrails when climbing up and down the machine, and always support your body at three points with your hands and feet.**

1. Open the maintenance cover.

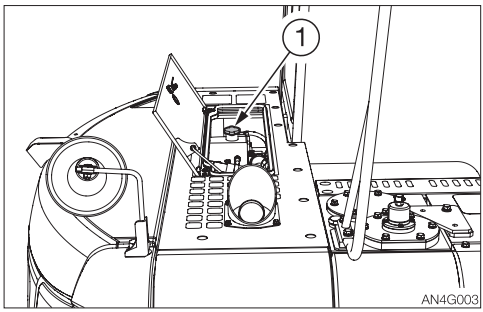

<Low noise package>

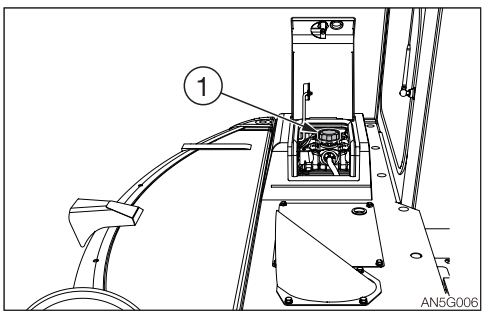

2. Gradually loosen the radiator cap or the expansion tank cap (1) to release the internal pressure, and then remove the cap.

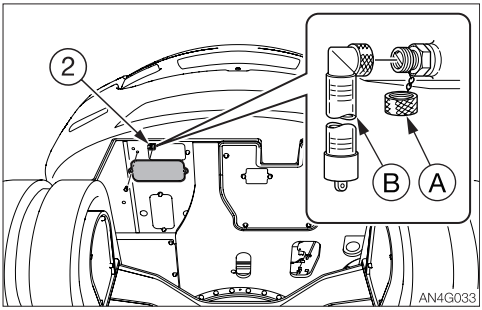

3. Loosen the bolts and open the cover (2).
4. Place a pan for catching the waste coolant under the drain plug (3).
5. Remove the cap (A), install the connector (B), and then drain the coolant. (The coolant comes out when the screw is tightened.)
6. Clean the cooling system, as necessary.
7. Remove the connector (B) and install the cap (A).
8. Take time and slowly add the new coolant (mixture of antifreeze and tap water) to the radiator through the fill port until it is full.
9. Close the radiator cap (1).
10. Warm up the engine. Use the meters to check that there are no irregularities in the cooling system at this time.
11. Increase the water temperature to at least 90°C (194°F). Then, run the engine for about 10 minutes with the thermostat kept open.
12. Stop the engine, wait until the cooling water temperature becomes lower, and then check the level of coolant in the radiator.
    If necessary, add cooling water until the radiator is full.
13. Close the radiator cap (1) and the cover (2).
14. Clean the interior of the reserve tank, and then add coolant to the upper limit (H).
15. When the coolant has been replaced, inspect the coolant level once again after operating the machine.
    When the machine is operated, the coolant is distributed throughout the entire system, resulting in the lower coolant level.
    Add coolant up to the full level.

REPLACING THE AIR CLEANER ELEMENT

⚠ WARNING

Stop the engine and allow the machine to cool down before performing maintenance.

- **The engine, muffler, radiator and many other parts of the machine are hot immediately after the engine is stopped. Touching these parts will cause burns.**

IMPORTANT: Do not use an element if its pleats, gaskets or seals are damaged.
IMPORTANT: Be sure to install the element and dust cap securely. If not, dust could be drain into the cylinder, damaging the engine.

1. Open the left side cover.

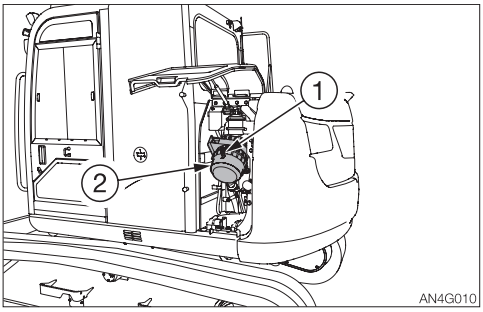

<Low noise package>

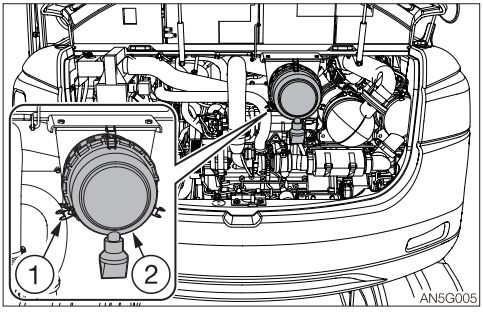

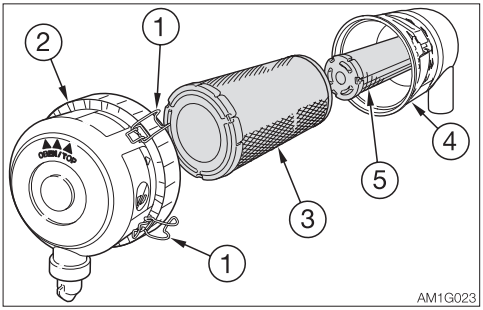

2. Loosen the clamps (1) and remove the dust cup (2).
3. Clean the inside of the dust cup (2).
4. Remove the primary element (3).
5. Clean the inside of the body (4).
6. Remove the secondary element (5).
7. Install the new elements.
8. Install the dust cup (2) with its "▲▲▲ OBEN/TOP" mark facing up, and then fasten it with the clamps (1).

REPLACING THE AIR BREATHER FILTER

⚠ WARNING

- Stop the engine and allow each part of the machine to cool down before performing maintenance.
- Before performing maintenance on the top of the machine, clean the place you will work on and observe the following to prevent falling.
  - Do not spill oil or grease.
  - Do not leave tools scattered around.
  - Watch your step when walking.
- Never jump down from the machine. Use the steps and handrails when climbing up and down the machine, and always support your body at three points with your hands and feet.
- Oil may spurt out if caps or filters are removed or pipes are disconnected before releasing the pressure in the hydraulic system.
  - Press the air breather button to relieve the internal pressure from the tank.

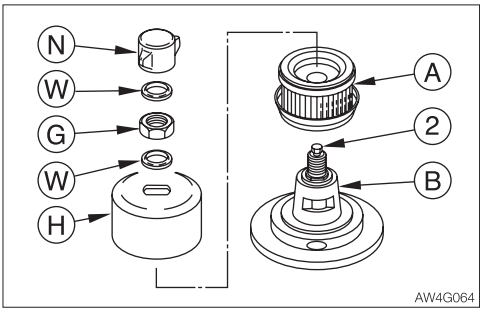

1. Remove the cap nut (N).
2. Press the button (2) to relieve the internal pressure from the tank.
3. Remove the seal washer (W) and the nut (G).
4. Remove the cover (H).
5. Install the filter (A) paying attention to the sides (top and bottom).
6. Install the body (B) and the cover (H) by aligning their notches.
7. Install the seal washer (W) and the nut (G).
8. Securely tighten the cap nut (N) by hand.

REPLACING THE FUEL FILTERS

⚠ WARNING

- Do not smoke or permit open flames while handling fuel or working on the fuel system.
- Stop the engine in a well-ventilated place and allow it to cool down before performing maintenance.
- Clean up spilled fuel immediately.

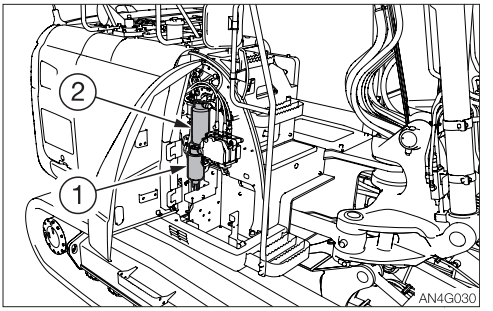

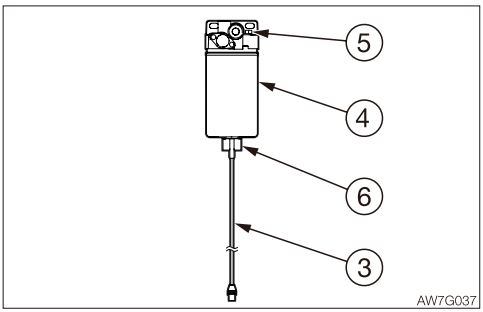

1. Open the front cover (for maintenance).
2. Remove the electric wiring (3).
3. Place a pan under the pre-fuel filter (1) to catch fuel.
4. Loosen the vent plug (5) and the drain plug (6) to drain the fuel inside.
5. Remove the filter (4) with a filter wrench.
6. Remove dirt from the seal surface of the new filter and its mating surface.
7. Apply a thin layer of fuel on the seal surface of the filter (4), and then turn the filter clockwise to install it.
   Tightening torque: 17 to 18 N·m (12.5 to 13.3 ft-lb)
8. Install the drain plug (6).
   Tightening torque: 1.6±0.3 N·m (1.2±0.2 ft-lb)
9. Tighten the vent plug (5).
   Tightening torque: 6.5±1.3 N·m (4.8±1 ft-lb)
10. Install the electric wiring.
11. Bleed air.
    Refer to “Bleeding air from the fuel system” on page 6-11.

Main fuel filter

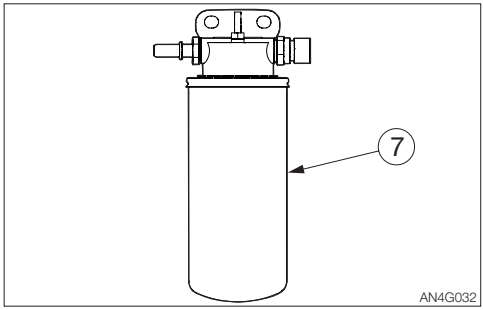

1. Open the front cover (for maintenance).
2. Place a pan under the main fuel filter (2) to catch fuel.
3. Remove the filter (7) with a filter wrench.
4. Remove dirt from the seal surface of the new filter and its mating surface.
5. Apply a thin layer of fuel on the gasket.
6. Install the filter (7) by turning it clockwise.
   Tightening torque: 10 to 12 N·m (7.4 to 8.9 ft-lb)
7. Bleed air.
   Refer to “Bleeding air from the fuel system” on page 6-11.

REPLACING THE DEF/ADBLUE® SUPPLY MODULE FILTER

Replace the DEF/AdBlue® supply module filter after three-year operation even if the running time is less than 1000 hours.

⚠ WARNING

Follow appropriate laws and regulations when disposing of the removed DEF/AdBlue® solution.

1. Turn the starter switch to the OFF position and wait for two minutes until the SCR system stops.
2. Open the front cover (for maintenance).

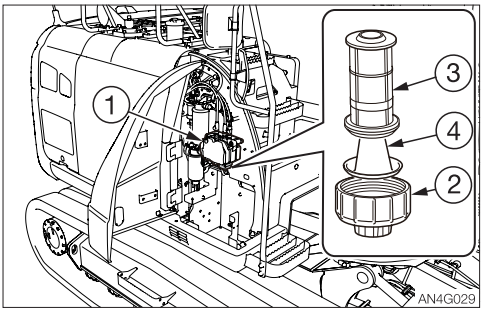

3. Remove the electric wiring from the supply module (1).
   Cover the electric wiring just removed with a plastic bag so that it will not be splashed with the DEF/AdBlue® solution.
4. Place a pan under the cover (2).
5. Remove the cover (2).
   Socket wrench: 27 mm
6. Pull out the filter (3) and the compensation body (4).
7. Set a new filter (3) and a new compensation body (4).
8. Install the cover (2).
   Tightening torque: 22.5±2.5 N·m (16.6±1.8 ft-lb)
9. Install the electric wiring.

INSPECTING AND ADJUSTING THE V-RIB BELT

Check for wear and abnormality. Repair or replace as necessary.
Refer to “Replacing the V-rib belt” on page 5-65.

INSPECTING THE ENGINE INSTALLATION CONDITION

Check for damage or loose bolt. Repair or replace as necessary.
This operation requires experience. Ask a Takeuchi service agent for it.

INSPECTING THE LOW-TEMPERATURE STARTING DEVICE

This operation requires experience. Ask a Takeuchi service agent for it.

EVERY 2000 HOURS

INSPECTING THE ACCUMULATOR

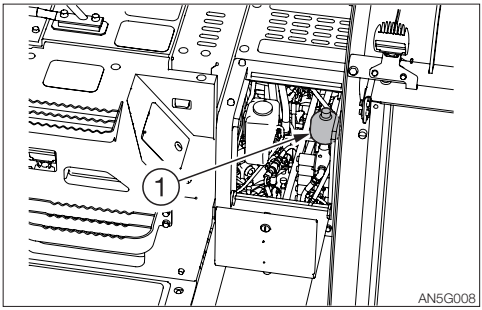

⚠ WARNING

- **High-pressure nitrogen gas is enclosed in the accumulator (1). If handled incorrectly, it could explode and cause serious injury. Strictly observe the following precautions:**
  - **Do not disassemble.**
  - **Do not allow flame nearby or throw it into a fire.**
  - **Do not drill, weld or fuse.**
  - **Do not subject it to physical shock such as hitting, rolling or dropping.**
  - **Before disposing of the unit, the sealed gas must be drained. Contact a Takeuchi sales or service dealer for help.**
- **Clear all personnel from the work area.**
- **Sound the horn to warn people around the machine.**

IMPORTANT: If the accumulator (1) fails, the boom cannot be lowered or the residual pressure in the hydraulic circuit cannot be released while the engine is stopped.

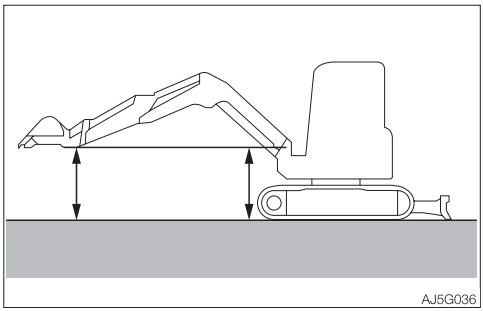

1. Start the engine, then fully retract the arm and bucket cylinders.
2. Operate the boom so that the tip of the arm is positioned at the bottom of the boom.

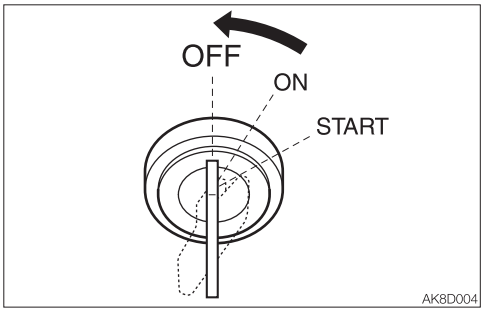

3. Turn the starter key to the OFF position to stop the engine.

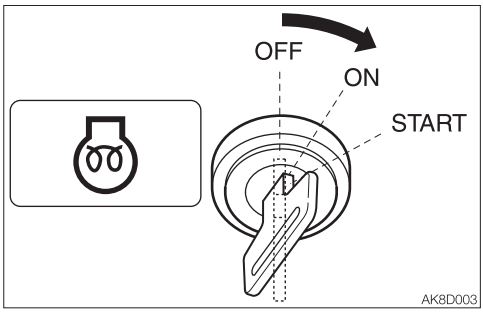

4. Turn the key to the ON position. (Do not start the engine.)

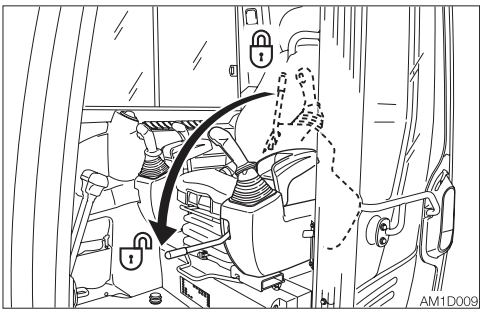

5. Fully lower the safety lock lever to disengage the lock.

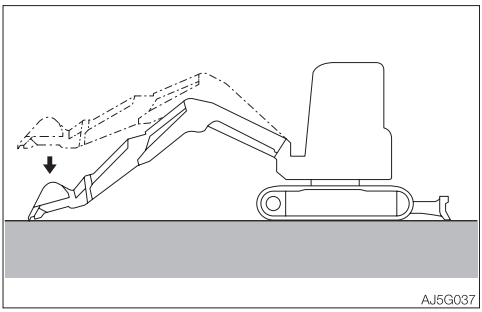

6. Lower the boom until the bucket contacts the ground.
   The machine is normal if the bucket is lowered to the ground. The accumulator (1) is probably faulty if the boom cannot be lowered or stops halfway. Consult a Takeuchi sales or service dealer for help.

Note: When the boom is lowered to lower the bucket to the ground, do it within 10 minutes of stopping the engine.

EVERY 3000 HOURS

REPLACING THE V-RIB BELT

⚠ WARNING

Stop the engine and allow the machine to cool down before performing maintenance.

- **The engine, muffler, radiator, hydraulic lines, sliding parts and many other parts of the machine are hot immediately after the engine is stopped. Touching these parts will cause burns.**
- **When performing maintenance on the machine, clean up the foot area and strictly observe the following so as not to fall:**
  - **Do not spill oil or grease.**
  - **Do not leave tools scattered around.**
  - **Watch your step when walking.**
- **Never jump down from the machine. Use the steps and handrails when climbing up and down the machine, and always support your body at three points with your hands and feet.**

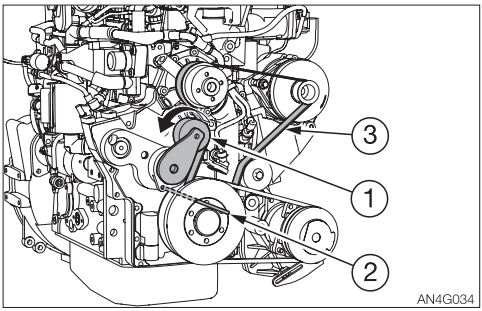

1. Use a wrench to push the tensioning pulley (1) in the direction of the arrow.
2. Secure the tensioning pulley (1) with the pin (2) and replace the V-rib belt with a new one.
3. Remove the pin (2) with the wrench and apply tension onto the V-rib belt (3).
4. Make sure that the V-rib belt (3) is properly seated on the guide of the tensioning pulley (1).

EVERY 4000 HOURS

REPLACING THE HYDRAULIC OIL AND CLEANING THE SUCTION STRAINER

⚠ WARNING

- Stop the engine and allow each part of the machine to cool down before performing maintenance.
  - The engine, the hydraulic system and many other parts of the machine are hot immediately after the engine is stopped. Touching these parts will cause burns.
  - The hydraulic oil is also hot and under high pressure.
    Be careful not to touch the hydraulic oil when loosening the cap or plug. Working on the machine under these conditions could result in burns or injuries due to the hot oil spurting out.
- Before performing maintenance on the top of the machine, clean the place you will work on and observe the following to prevent falling.
  - Do not spill oil or grease.
  - Do not leave tools scattered around.
  - Watch your step when walking.
- Never jump down from the machine. Use the steps and handrails when climbing up and down the machine, and always support your body at three points with your hands and feet.
- Oil may spurt out if caps or filters are removed or pipes are disconnected before releasing the pressure in the hydraulic system.
  - Press the air breather button to relieve the internal pressure from the tank.
  - When removing plugs or screws, or when disconnecting hoses, stand to the side and loosen them slowly to gradually release the internal pressure before removing.

1. Slew 45° clockwise and set the machine to the hydraulic oil level inspection posture.
   Refer to “Inspecting the hydraulic oil tank level and replenishing” on page 5-28.

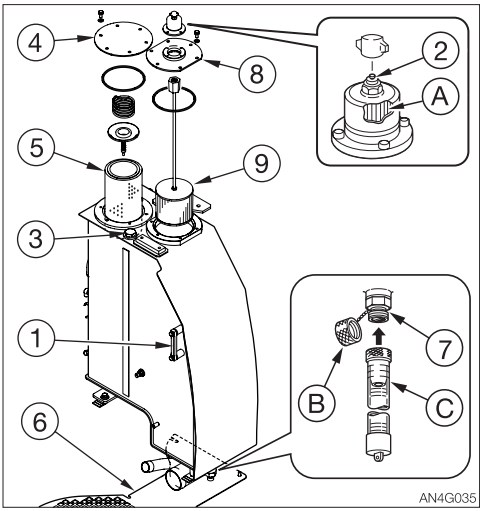

2. Press the button (2) to relieve the internal pressure from the tank.
3. Replace the air breather filter (A).
   Refer to “Replacing the air breather filter” on page 5-62.
4. Remove the plug (3).
5. Loosen the bolts and remove the under cover (6).
6. Place a pan under the plug (7) to catch the waste oil.
7. Remove the cap (B), install the connector (C), and then drain the hydraulic oil. (The oil comes out once the screw is tightened.)
8. Loosen the bolts and remove the flange (4).
9. Remove the return filter (5).
10. Loosen the bolts and remove the flange (8).
11. Remove the suction strainer (9) and clean it.
12. Clean the inside of the hydraulic oil tank.
13. Install the suction strainer (9) on the tank and then install the flange (8).
14. Install the new return filter (5) and the flange (4) on the tank.

15. Remove the connector (C) and install the cap (B).
16. Add hydraulic oil from the hole of plug (3) up to the level between the upper limit (H) and the lower limit (L) in the sight gauge (1).
17. Tighten the plug (3).
18. Bleed air from the hydraulic oil circuit following “Bleeding air” below.
19. Set the machine to the hydraulic oil level inspection posture and inspect the oil level after the oil cools.
    Refer to “Inspecting the hydraulic oil tank level and replenishing” on page 5-28.
20. Tighten the under cover (6).

Bleeding air

IMPORTANT: After replacing the hydraulic oil or hydraulic devices, or after performing maintenance of the hydraulic devices, bleed air from the hydraulic circuits and hydraulic devices. Failure to do so may damage the hydraulic devices.

• Hydraulic pump

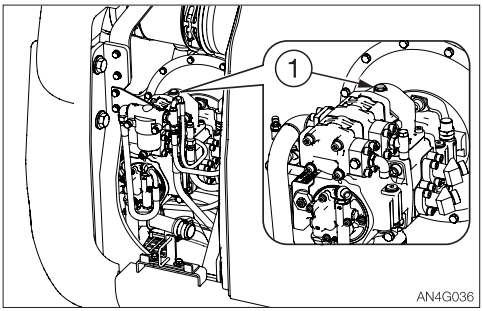

1. Open the right side cover.
2. Loosen the vent plug (1) on the hydraulic pump.
3. Once hydraulic oil overflows from the vent plug hole (1), tighten the vent plug (1).

If the boom or arm does not move normally, air may be present in the following locations. This operation is dangerous and requires experience. Ask your sales or service dealer for help.

• Emergency shut-off valve

1. Place a pan under the hose (A) or (B) to catch the waste oil.
2. Start the engine and run it at low idle.
3. Fully lower the safety lock lever to the unlock position.

Boom

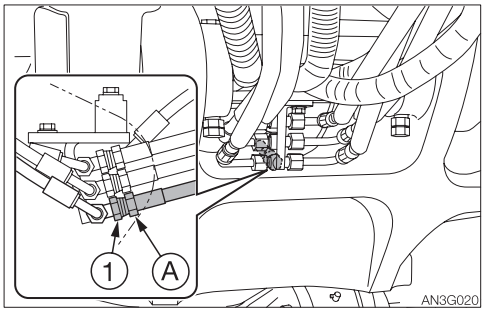

4. Hold the hose fitting (A) in place with a wrench and slowly loosen the hose nut (1).
5. Slowly move the boom in the “Boom lower” direction a little until there are no more air bubbles coming from the hose nut (1) joint.
6. Hold the hose fitting (A) in place with a wrench and tighten the hose nut (1).
   Tightening torque: 50 N·m (36.9 ft-lb.)

Arm

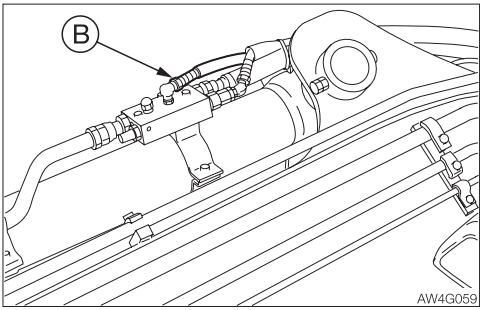

4. Loosen the hose (B) slowly.
5. Slowly move the arm in the “Arm in” direction a little until there are no more air bubbles coming from the hose (B) joint.
6. Tighten the hose (B).
   Tightening torque: 50 N·m (36.9 ft-lb.)

• Slew motor and cylinders

1. Start the engine, let it run at a low-idling speed for 10 minutes.
2. Maintain the engine at low idle, then extend and retract each cylinder 4 or 5 times, without letting them reach the stroke end.
3. Slew slowly left and right several times.
4. Run the engine at high speed, then extend and retract each cylinder 4 or 5 times, without letting them reach the stroke end.
5. Slew left and right several times.
6. Return the engine speed to low idle, then extend and retract each cylinder 4 or 5 times to the stroke end.

WHEN REQUIRED

REPLACING THE BUCKET TEETH AND THE SIDE CUTTERS

Replace the bucket teeth if the tooth points are worn. Do not wait until the bucket is damaged.

⚠ WARNING

- **Before performing maintenance or repairs under the machine, lower all moveable working equipment to the ground or in the lowermost position.**
- **To prevent unexpected movement, firmly secure the working equipment when repairing or replacing the bucket teeth or side cutter.**
- **When using a hammer, pins may fly out or metal particles may be scattered. This may lead to serious injury.**
  - **If hard metal parts such as pins, bucket teeth, side cutter or bearings are hit with a hammer, wear protective gear such as safety goggles and gloves.**
  - **When hitting pins or bucket teeth, always check that there is no one in the surrounding area.**
- **Do not allow unauthorized personnel in the work area while working.**

Removing

1. Clean the bucket and park the machine on a flat and rigid ground.

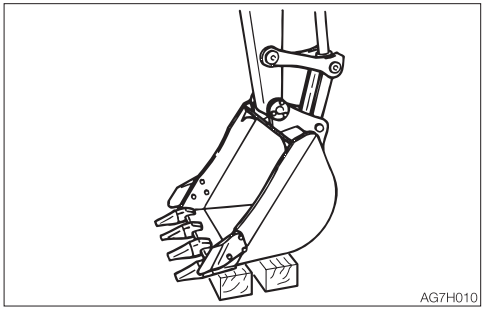

2. Place the bucket with its bottom flat on the blocks so that the locking pin can be knocked out.
3. Remove the key, and then check that the bucket is stable.

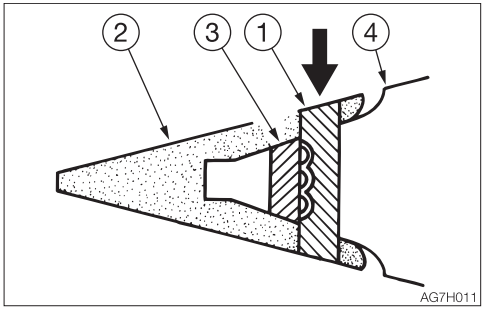

4. Knock out the locking pin (1) and remove the point (2).

Note: If the drift is set against rubber pin lock (3) when it is hit, the rubber pin lock may break. Set it against the back of the locking pin.

5. Remove the rubber pin lock (3). Check if the rubber pin lock is still usable. Replace it if it is as follows.

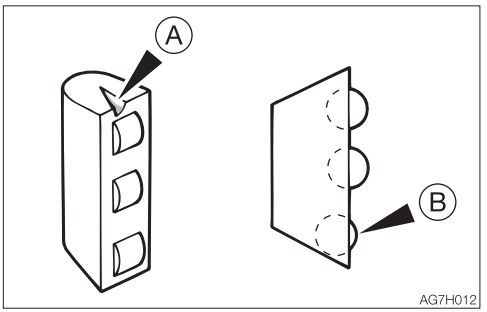

A .....There are cracks in the rubber and the roller is coming off.
B .....The roller is dented when pressed with a finger.

Installation

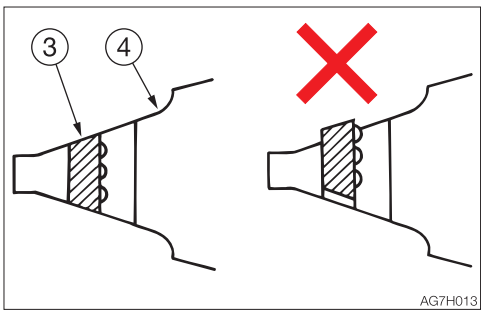

1. Remove the dirt on the surface of adaptor and the inner part of tooth, make the better contact on the mating part.
2. Push rubber pin lock (3) into the welding adaptor (4).
   Do not let the rubber pin lock stick out from the welding adaptor surface.

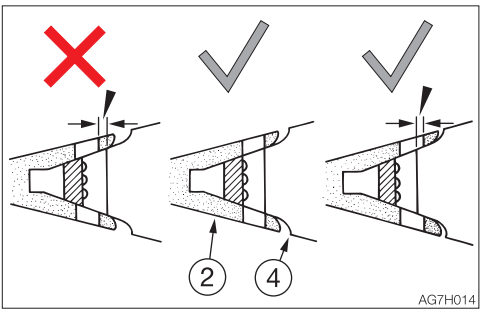

3. Install the point (2) onto the welding adaptor (4).
   Insert the point so that the surface behind the point's pin hole is aligned with the surface behind the welding adapter's pin hole.

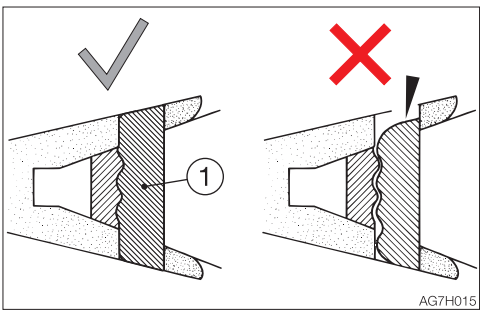

4. Knock out the locking pin (1).
   Check that the end surfaces of the locking pin just knocked out are aligned with the upper and lower surface of the point. Do not use the worn locking pin.
   The life of the teeth can be lengthened and the frequency of its replacement can be reduced by turning it upside down so that it will wear evenly.
   Replace the rubber pin lock and locking pin at the same time as replacing the teeth. This makes it possible to prevent the teeth from falling out.

• Side cutter
Installation

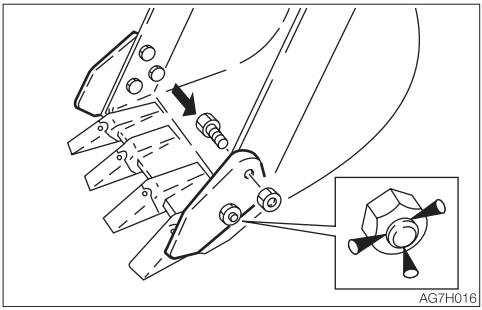

1. Insert the bolts from the inner of the bucket and tighten the side cutter with nuts.
   Tightening torque: 475 N·m (350 ft-lb.)
2. Caulk the bolts with a punch at three spots along the periphery of the screw to prevent the nuts from coming loose.

REPLACING THE BUCKET

⚠ WARNING

- Before performing maintenance or repairs under the machine, lower all working equipment to the ground or in the lowermost position.
- If maintenance must be performed with the engine running, always work as a two person team communicating each other.
  - One person must sit in the operator's seat so that he/she can immediately stop the engine when necessary. He/she must take care not to touch the lever or pedal unless necessary.
  - The one who performs maintenance must make sure to keep his/her body or clothing away from the moving part of the machine.
- When using a hammer, pins may fly out or metal particles may be scattered. This may lead to serious injury.
  - If hard metal parts such as pins, bucket teeth, side cutter or bearings are hit with a hammer, wear protective gear such as safety goggles and gloves.
  - When hitting pins or bucket teeth, always check that there is no one in the surrounding area.
- When aligning the pin holes, always do so by checking them visually. Do not insert your finger in the pin hole, or you could lose your finger.

Removing

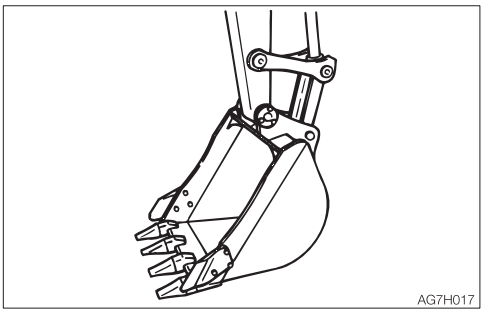

1. Lower the bucket to the ground as shown on the figure above in a stable position.

Note: When removing pins, set the bucket so that it is barely touching the ground. If the bucket is firmly touching the ground, the resistance will be great and it will be difficult to remove the pin.

2. Set the safety lock lever to the locked position and stop the engine.

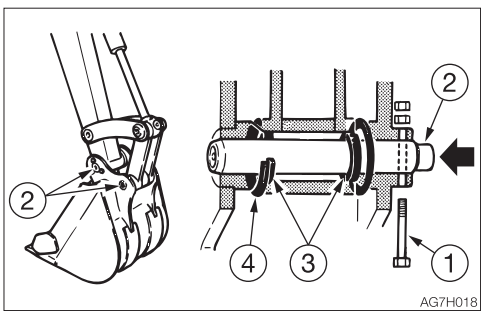

3. Remove the bolt (1).
4. Hammer the pin (2) out of the bucket.
5. Remove the bucket.
   Inspect the pin seal (3) and replace it if it is deformed or damaged. (See next page.)

Installation

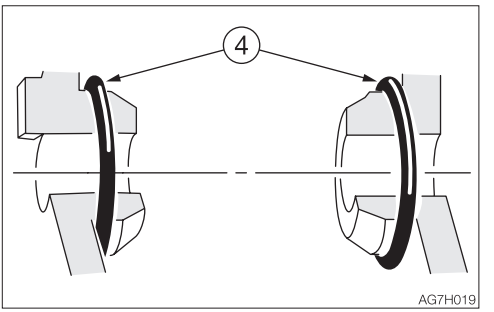

1. Set the O-ring (4) on the bucket as shown on the figure above.

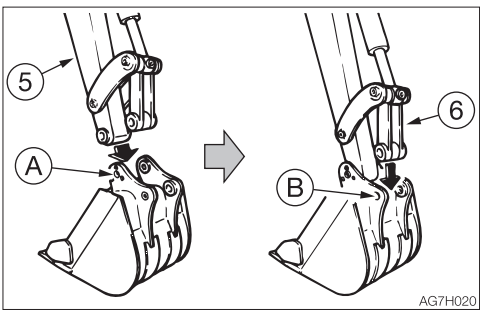

2. Align the pin hole (A) on the bucket with the pin hole on the arm (5), and install the pin (2).
3. Operate the cylinder, align the pin hole (B) on the bucket with the pin hole on the link arm (6), and install the pin (2).

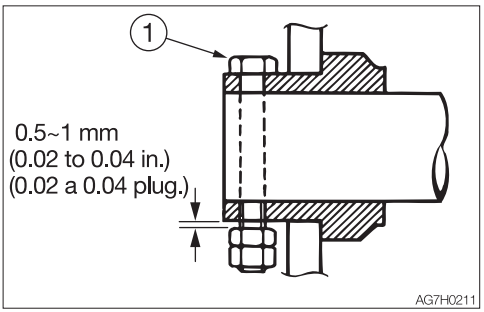

4. Align the turn prevention holes, and then install the bolt (1) and the nut. Be sure to leave a gap of about 0.5 to 1 mm (0.02 to 0.04 in.) between the nut and bucket bush, or the nut will come loose.

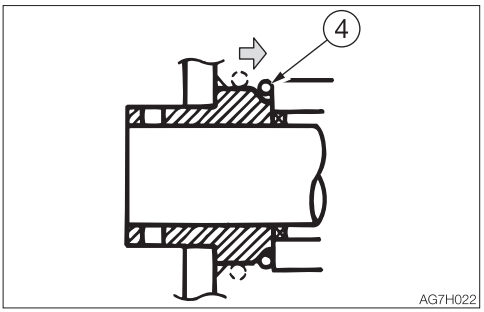

5. Adjust the gap between the bucket and the arm.
   Refer to “Adjusting the gap between the bucket and arm (If equipped)” on page 5-74.
6. Slide the O-ring (4).

Replacing the pin seal

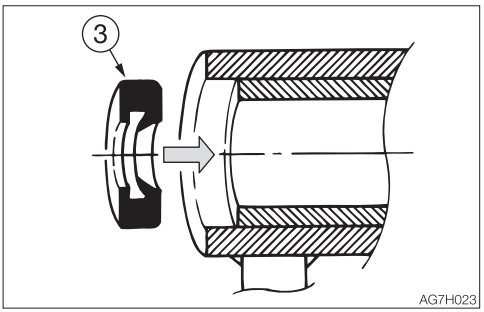

1. Set the pin seal (3) in the direction shown on the figure above.
2. Use a mallet to slowly press the pin seal in. Be careful not to damage the seal.

ADJUSTING THE GAP BETWEEN THE BUCKET AND ARM (IF EQUIPPED)

⚠ WARNING

- **Before performing maintenance or repairs under the machine, lower all working equipment to the ground or in the lowermost position.**
- **To prevent unexpected movement, securely block the working equipment when adjusting the gap.**

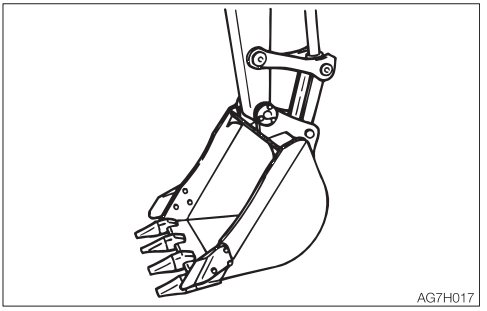

1. Lower the bucket to the ground in a stable position as shown in the figure above.
2. Slew the upperstructure slightly to the left and lightly press the arm to the left side of the bucket (the side without an adjuster).
3. Set the safety lock lever to the lock position and stop the engine.

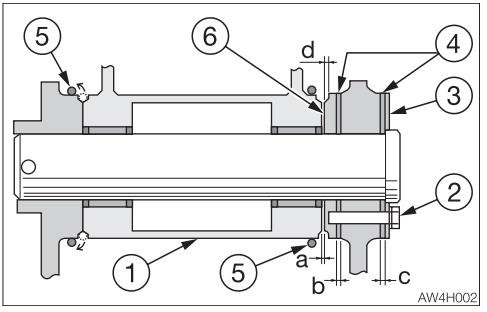

4. Slightly loosen the 3 bolts (2) (using a 22 mm (0.87 in) wrench) and remove the shims (4) from “gap c” between the blade (3) and bucket. The shims (4) are in two parts and can be removed easily when the bolts are slightly loosened by sticking a screwdriver in the seam between the left and right shims.
5. Move the O-ring (5) to bring the gap (a) into view and measure the width of the gap (a).

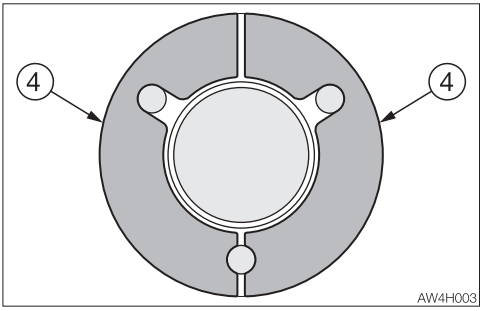

6. Press the head of the bolts (2) with a finger to eliminate gap (a). This increases gap (b). Insert the shims removed above into gap (b), using as many shims as can be inserted easily.
7. Set the remaining shims back in gap (c), then tighten the bolts.
   Tightening torque : 83 N·m (61.5 ft-lb).
   This completes the adjustment.

Note: The proper total number of shims for gaps (b) and (c) is 6 x 2 = 12. If you forget to set the shims remaining in step 7 above back in gap (c), the tip of bolts (2) will extend past the boss (6). This may damage the boss at the arm’s tip or cause the bolt to break. If the end face of boss (6) wears and the width of the groove (d) for the O-ring reaches 5 mm (0.2 in), replace boss (6) with a new one.

INSPECTING AND REPLENISHING THE WINDSHIELD WASHER FLUID

⚠ WARNING

Choose ethyl alcohol as washer solution. Do not use methyl alcohol as washer solution. It could damage the eyes.

Use a windshield washer fluid designed specifically for motor vehicles. Follow the instructions included with the washer fluid.

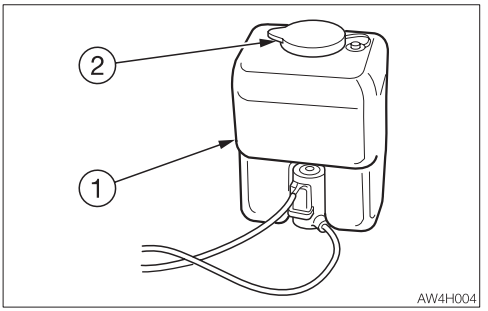

Inspection

1. Open the center cover.
2. Inspect the washer tank (1) and add washer fluid if the level is low.

Replenishing

1. Mix the washer fluid to the prescribed concentration.
2. Remove the cap (2) and add washer fluid. Keep the dust away while replenishing the washer fluid.
3. Install the cap (2).

LUBRICATING THE LEVERS AND PEDALS

⚠ WARNING

Set the machine to the parking posture, stop the engine, remove the starter key and store it. Failure to do so may result in the machine moving abruptly, leading to serious injury or death.

If the levers or pedals no longer move smoothly, grease them.

Operating levers

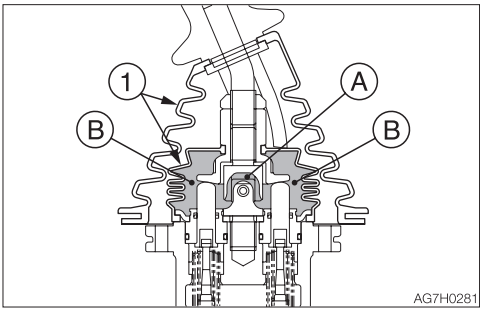

Travel levers/pedals

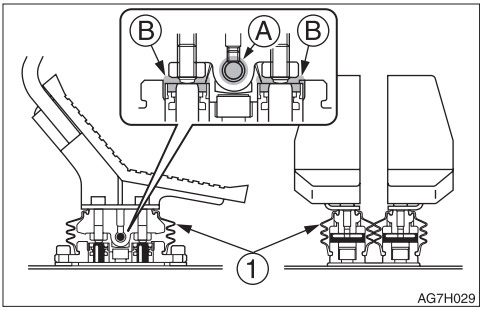

Boom swing pedal

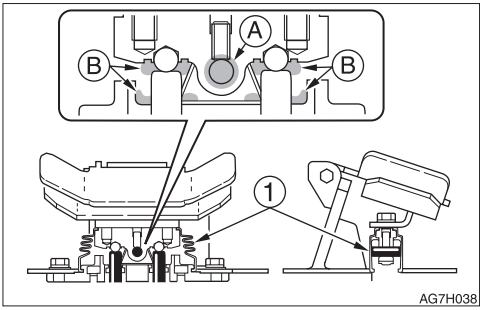

Dozer blade lever

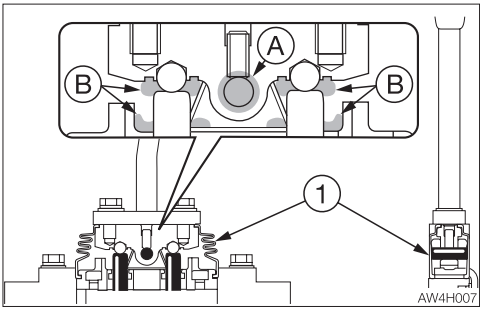

1. Remove the lower mount section of the boot (1) and turn it upward.
2. Wipe off the old grease.
3. Apply grease to points (A) and (B).
4. Set the boot (1) back as it was.

INSPECTING THE RUBBER CRAWLERS

Repair or replace the rubber crawlers if their condition becomes as described below. Consult your sales or service dealer for repair or replacement.

Rubber crawler
Replace the crawler if the entire crawler is stretched and cannot be adjusted.

(1) Lug

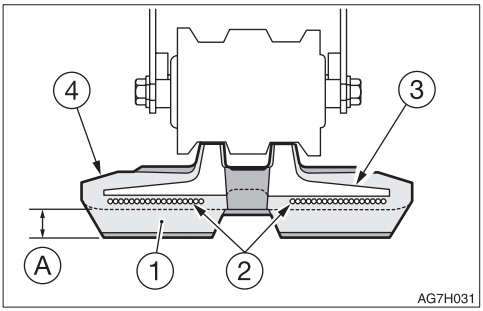

Replace if the height of (A) is 5 mm (0.2 in.) or below.

(2) Steel cord

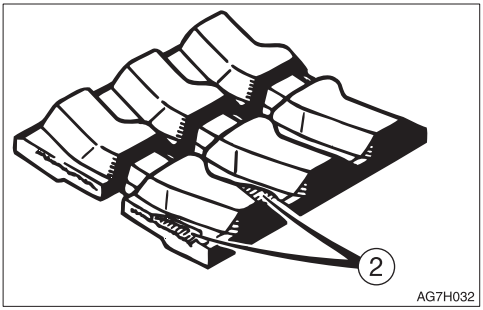

Replace if the steel cord is exposed for two links or more.
Replace if the half or more of the steel cords on one side are cut.

(3) Metal core

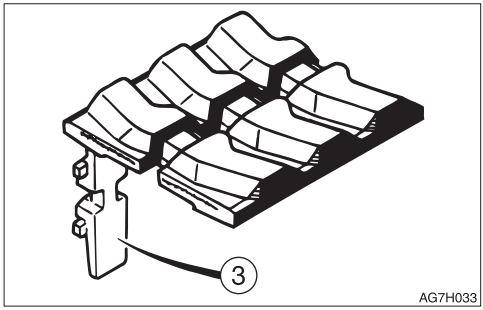

Replace if even one metal core is off.

(4) Rubber

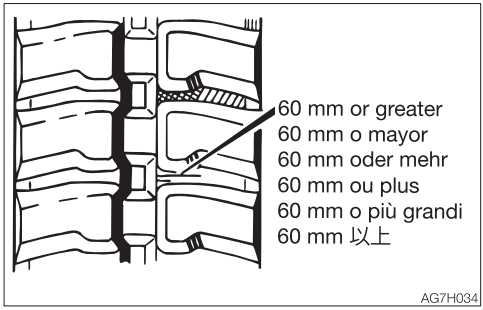

Repair if there are cracks of 60 mm (2.4 in.) or greater in length.
If the steel cord is visible, repair as soon as possible, regardless of the length of the crack.

REPLACING THE RUBBER CRAWLERS

⚠ WARNING

- **If you must work beneath the raised machine or working equipment, always use wood blocks, jack-stands or other rigid and stable supports. Never get under the machine or working equipment if they are not sufficiently supported.**
- **If maintenance must be performed with the engine running, always work as a two person team communicating each other.**
  - **One person must sit in the operator's seat so that he/she can immediately stop the engine when necessary. He/she must take care not to touch the lever or pedal unless necessary.**
  - **The one who performs maintenance must make sure to keep his/her body or clothing away from the moving part of the machine.**

Removal

1. Fully release the tension of the rubber crawler.
   Refer to "Inspecting and adjusting the crawler tension" on page 5-40.

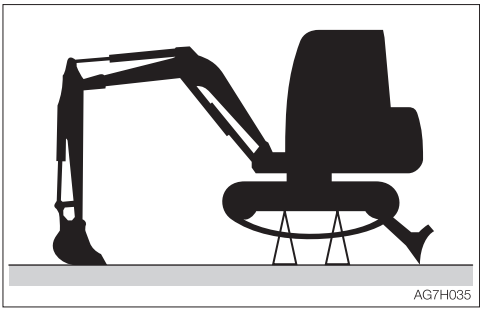

2. Use the working equipment to lift the body.

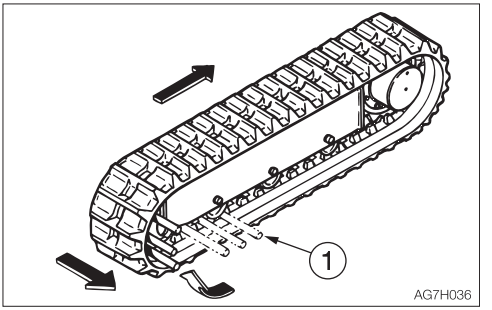

3. Set an iron pipe (1) in the rubber crawler and turn the sprocket slowly in the reverse direction.
4. Turn until the iron pipe (1) is directly next to the idler and the rubber crawler lifts away from the idler, then stop turning the sprocket.
5. Slide the rubber crawler sideways and remove it from the crawler frame.
   Remove the other rubber crawler using the same procedure.

Installation

1. Use the working equipment to lift the body.

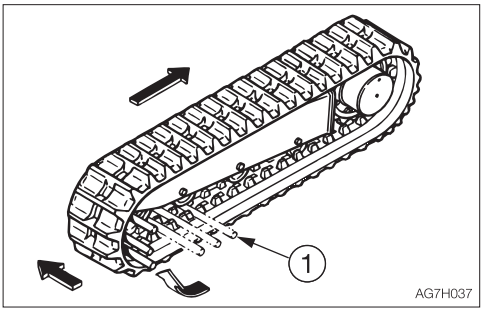

2. Set the rubber crawler on the sprocket.
3. Set an iron pipe (1) in the rubber crawler and turn the sprocket slowly in the reverse direction.
4. Turn until the iron pipe (1) is directly next to the idler and the rubber crawler lifts away from the idler, then stop turning the sprocket.
5. Slide the rubber crawler inward, engage it on the idler, then pull out the iron pipe.
6. Check that the rubber crawler is securely engaged on the sprocket and idler.
7. Tighten the rubber crawler to the standard tension.
   Refer to “Inspecting and adjusting the crawler tension” on page 5-40.
8. Install the other rubber crawler using the same procedure.

REPLACING THE DIESEL PARTICULATE FILTER <APPLICABLE MACHINE MODELS 514700252 OR LATER>

The DPF must be replaced if the ash lamp lights up or flashes. Refer to “16. Standstill regeneration in process/Demand indicator lamp/Ash lamp <Applicable machine models 514700252 or later>” on page 2-24.
This operation requires experience. Ask a Takeuchi service agent for it.

EVERY 2 YEARS

REPLACING THE RECEIVER DRYER

This operation requires experience. Ask your sales or service dealer for it.

MAINTENANCE DURING EXTENDED STORAGE PERIOD

STORAGE PROCEDURES

If the machine is to be stored for 30 days or more, store it indoors. If it must be stored outdoors, park the machine on a surface laid with lumber on a flat ground, and place a waterproof cover over it so that it stays dry.

1. Clean the machine.
2. Inspect for oil leakage, water leakage, cracks and loose nuts and bolts.
3. Add fuel and replace the hydraulic oil and oil.
4. To prevent the DEF/AdBlue® solution from evaporating, fill up the DEF/AdBlue® tank.
5. To prevent rusting and freezing, replace the engine coolant with long-life coolant (LLC).
   Refer to “Replacing the engine cooling system” on page 5-59.
6. Use the grease gun to lubricate the grease fittings.
7. Fully retract the bucket and arm cylinders and lower the bucket and dozer blade to the ground.
8. Apply rust-inhibiting oil to the hydraulic cylinder rods.
9. Disconnect the negative cable from the battery and cover the battery to prevent freezing.

IMPORTANT: The SCR system operates for up to 2 minutes after the starter switch is turned to the OFF position.
When removing the batteries or electrical connectors for inspection or maintenance, wait for at least 2 minutes after the starter switch is turned to the OFF position. Otherwise, the system could fail.

During storage

⚠ WARNING

- **Do not operate the machine in an enclosed area without adequate ventilation.**
- **If natural ventilation is not possible, install ventilators, fans, exhaust extension pipes or other venting devices.**

1. To prevent rusting, operate the machine once a month so that the oil can be circulated throughout the system.
2. Inspect the battery and recharge it as necessary.
   Ask your sales or service dealer for recharging.

Starting the machine after storage

IMPORTANT: If the above “Storage procedures” have not been followed during the extended storage periods, consult your sales or service dealer before starting the machine again.

1. Wipe off the rust-inhibiting oil that was applied on the piston rods of the hydraulic oil cylinders.
2. Add oil or grease as necessary.
3. If the storage period has been four months or more, replace DEF/AdBlue®. There is a risk that the SCR system may malfunction; contact a Takeuchi service dealer for assistance.

Returning the engine to service

1. Perform the daily checks.
2. The engine should be pre-oiled before startup.
   a. Crank the engine, leaving the fuel system shut off so the engine will not start, for 15 seconds.
   b. Then pause for 30 seconds.
   c. Repeat the procedure until you have cranked the engine for a total of one minute. This will circulate the oil in the engine's lubrication system.
3. Prime the fuel system.
4. Start the engine. Allow the engine to idle for approximately 15 minutes while you check for:
   · Proper oil pressure
   · Fuel, engine oil or coolant leaks
   · Proper operation of the indicators and/or gauges
5. Avoid prolonged operation at minimum or maximum engine speeds and loads for the remainder of the first hour of operation.

TROUBLESHOOTING



SYMPTOMS THAT ARE NOT MALFUNCTIONS

The symptoms listed below are not malfunctions.

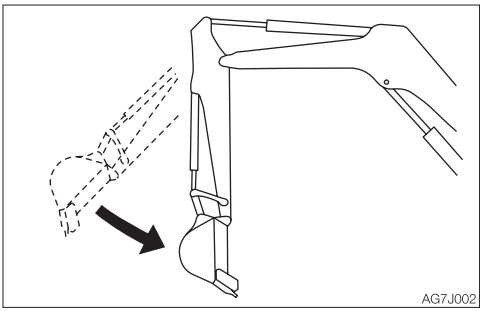

- The arm retracting speed momentarily slows down when it reaches an almost vertical position while the engine is running at low speed.

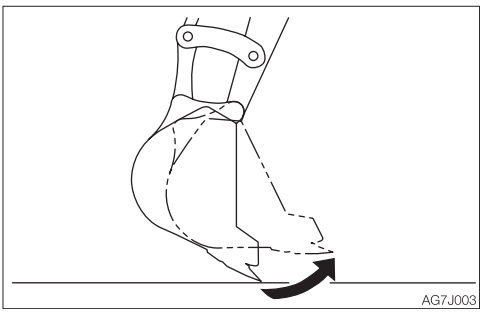

- The bucket teeth moving speed momentarily slows down when it reaches an almost horizontal position while the engine is running at low speed.
- The slew motor produces noise at the beginning and end of the slewing.
- The travel motor produces noise when stopped suddenly from its high speed traveling.
- The control valve produces noise if excessive force is applied to the working equipment or when it moved to the stroke end.
- It becomes less easy to operate the machine when an attachment weighing more than a standard arm or bucket is installed.

IF THE ENGINE OVERHEATS

⚠ WARNING

- **Do not open the engine hood when steam is coming from it. The steam or hot water may spurt out and cause burns.**
- **Do not try to remove the radiator cap or the drain plug when the cooling water is hot. Stop the engine, wait until the engine and the radiator cool, and then slowly loosen the radiator cap to release the internal pressure.**
- **Before performing maintenance, stop the engine and allow the machine to cool down.**

The symptoms listed below indicate overheating.

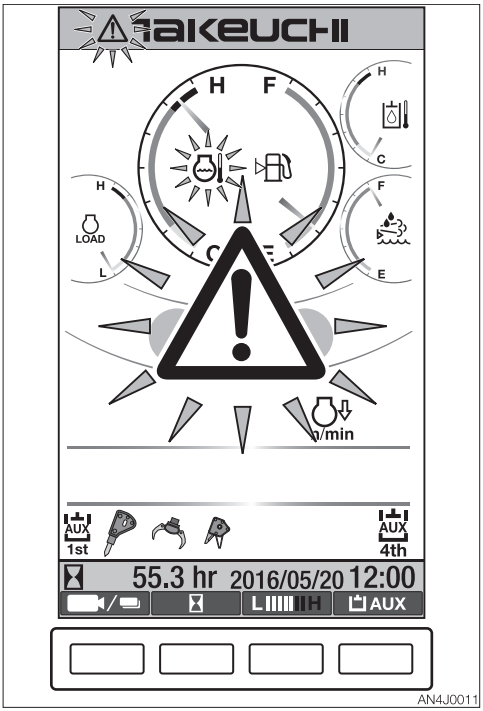

- An alarm is sounded and the vehicle and engine emergency lamp and the coolant temperature warning lamp start flashing.
- The water temperature gauge level is in the red zone.
- Steam comes from the engine room.

Remedy procedure

1. Park the machine in a safe place.
2. Check if steam is coming out of the closed engine hood.
3. If there is steam, stop the engine immediately and contact your sales or service dealer for repair. If steam, is not coming out run the engine at low idle and let the water temperature cool down.
4. When the water temperature gauge LED drops in the green zone, stop the engine.
5. Perform the inspections and the remedies listed below once the engine cools down.
   - V-rib belt slack ..... Adjust
     Refer to page 5-65.
   - Coolant level ..... Add
     Refer to page 5-22.
   - Water leakage ..... Repair
   - Radiator fins..... Clean
     Refer to page 5-49.
   - Sediment in cooling system ..... Clean
     Refer to pages 5-59 to 5-60.

If the problem persists after the above remedies, contact your sales or service dealer for repair.

IF THE BATTERY GOES DEAD

The symptoms below indicate that the battery is dead.
- The starter motor does not turn or fails to start the engine.
- The horn is too weak.

Remedy procedure

Start the engine using the booster battery on the other vehicle (booster vehicle) and the jumper cables.

⚠ WARNING

- **When starting the engine using the jumper cables, be sure to connect the cables by following the proper steps. Improper use of jumper cables can result in battery explosion or unexpected machine motion.**
  - **Do not allow the booster vehicle and the machine with a dead battery (dead machine) to touch each other.**
  - **Do not allow the positive (+) and the negative (–) clips of the jumper cables to touch each other.**
  - **When connecting, attach the jumper cable to the positive (+) terminals first. When disconnecting, remove the cable from the negative (–) terminal (ground) first.**
  - **Connect the last clip of the jumper cable to a point as far away from the battery as possible.**
- **Always wear the protective goggle when jump starting the engine by using the jumper cables.**

IMPORTANT: Use the jumper cables and clips of a size suited to the capacity of battery. Do not use damaged or corroded jumper cables and clips.
IMPORTANT: Be sure that the battery of the booster vehicle has the same capacity as the battery of the dead machine.
IMPORTANT: Be sure to connect the clips securely.

Connecting the jumper cables

IMPORTANT: Set the starter keys of the booster vehicle and the dead machine to the OFF position.

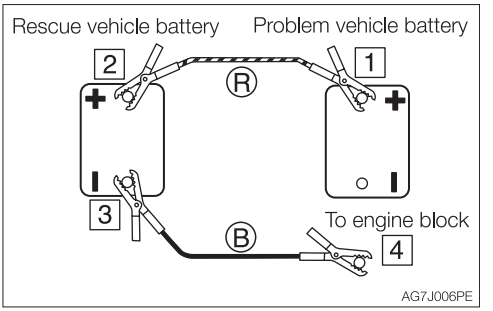

1. Connect the clip of jumper cable (R) to the positive (+) battery terminal of the dead machine.
2. Connect the other clip of jumper cable (R) to the positive (+) battery terminal of the booster vehicle.
3. Connect the clip of jumper cable (B) to the negative (–) battery terminal of the booster vehicle.
4. Connect the other clip of jumper cable (B) to the engine block of the dead machine. Connect the clip to a place as far from the battery as possible.

Starting the engine

1. Check that the clips are securely connected to the terminals.
2. Start the engine of the booster vehicle and run it at high speed.
3. Start the engine of the dead machine.

Disconnecting the jumper cables

Once the dead machine is successfully running, remove the jumper cables by following the same steps as for connection in the reverse order.

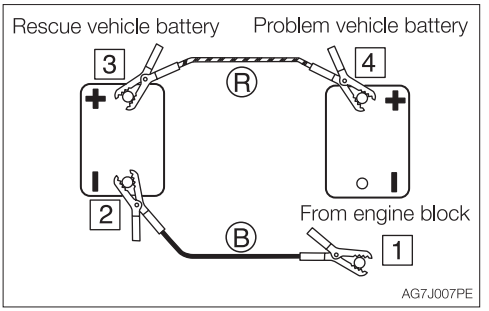

1. Disconnect the clip of jumper cable (B) from the engine block of the dead machine.
2. Disconnect the other clip of jumper cable (B) from the negative (–) battery terminal of the booster vehicle.
3. Disconnect the clip of jumper cable (R) from the positive (+) battery terminal of the booster vehicle.
4. Disconnect the clip of jumper cable (R) from the positive (+) battery terminal of the dead machine.

Recharging

Ask your sales or service dealer for recharging the dead battery.

MEMO

IF A FUSE BLOWS

If a light does not come on or the electrical system does not work, a fuse may be blown. Inspect the fuses.

INSPECTING AND REPLACING THE FUSE

⚠ WARNING

If the fuse blows again soon after replacement, then the electric system is likely faulty. It may pose a fire hazard if not properly repaired. Contact your sales or service dealer for advice.

1. Turn the starter key to the OFF position to stop the engine.

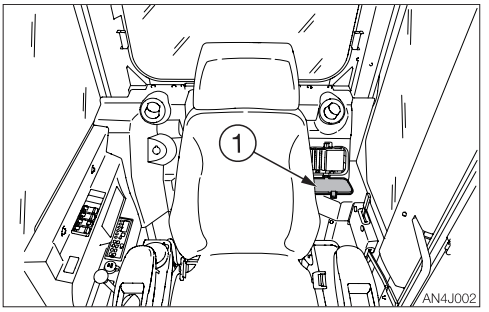

2. Open the fuse box cover (1).
3. Inspect for blown fuses.

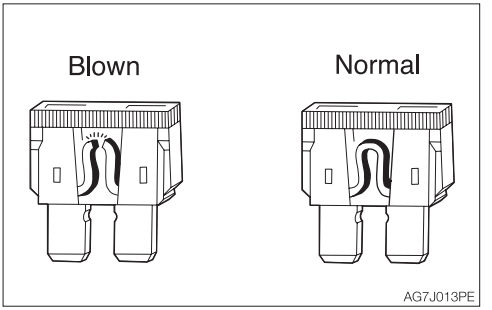

4. If a fuse is blown, replace it with a spare fuse of the same capacity.

Fuse layout and circuits protected

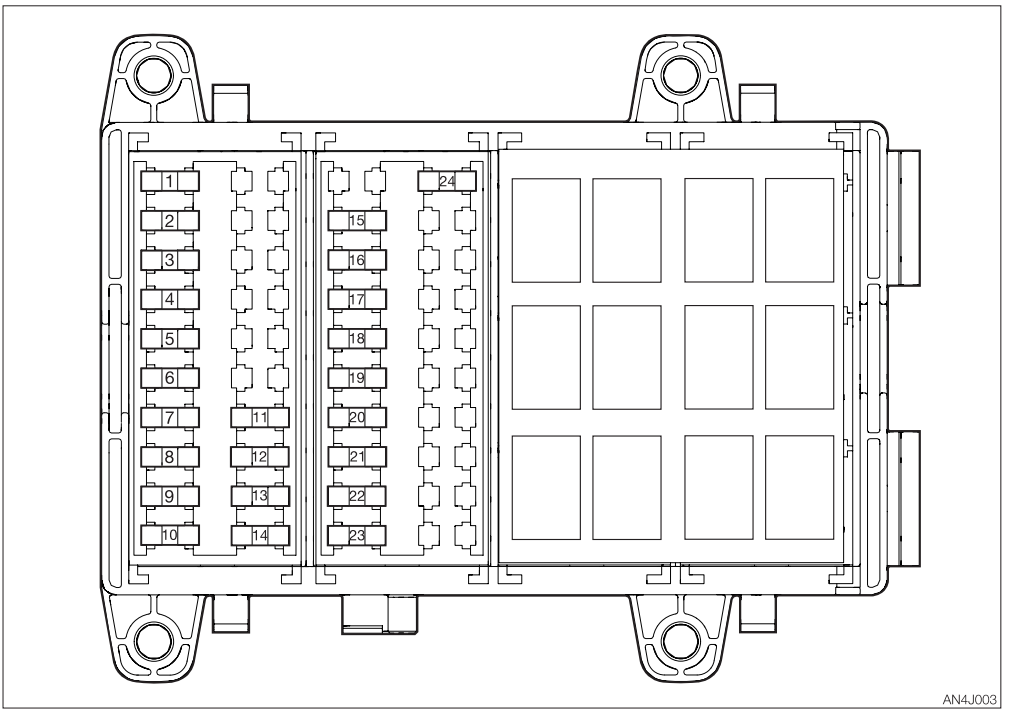

No.	Capacity	Symbol	Protected circuit	Fuse No.
1	25A		Fan switch	F10
2	10A		Air conditioner switch	F9
3	15A	OPT (2)	Option (2)	F8
4	10A	OPT (1)	Option (1)	F7
5	25A	CAB	Cab	F6
6	10A		Display	F5
7	10A		Controller, travel alarm	F4
8	20A		Safety lock lever	F3
9	10A		Wiper	F2
10	20A		Lights	F1
11	5A	OPT (12V)	Option (12V)	F14
12	15A		NOx sensor	F13

No.	Capacity	Symbol	Protected circuit	Fuse No.
13	5A		DEF sensor	F12
14	3A		Immobilizer	F11
15	10A		Controller	F29
16	10A		Display	F28
17	3A		Immobilizer	F27
18	25A		Fuel supply pump	F26
19	30A		ECU	F25
20	20A		Feed pump	F24
21	30A		SCR system	F23
22	10A		Starter switch	F22
23	10A		Horn	F21
24	10A	OPT (12V)	Option (12V)	F40

INSPECTING THE FUSIBLE LINK

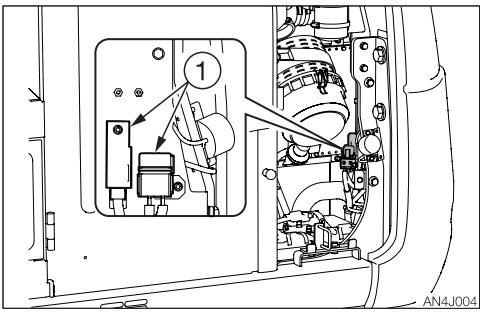

If the machine is not turned on after turning the starter switch to the ON position, the cartridge type fusible link (1) is likely blown. Open the left side cover for inspection. If the fusible link is blown, contact your sales or service dealer.

Note: Fusible links are large type fuses used in high current applications. Like a regular fuse, they act as fuses by protecting the electric components and wirings from damage caused by excessive current draw.

RESTARTING AFTER ADDING FUEL

BLEEDING AIR FROM THE FUEL SYSTEM

IMPORTANT: NEVER use the starter motor to crank the engine in order to prime the fuel system. This may cause the starter motor to overheat and damage the coils, pinion gear and/or ring gear.
IMPORTANT: If the engine stalls due to fuel shortage, add fuel, turn the key to the ON position for 60 seconds, and then turn it to the START position. Running the starter for a long time before there is enough fuel is going through can cause the starter to fail.

1. Add fuel.

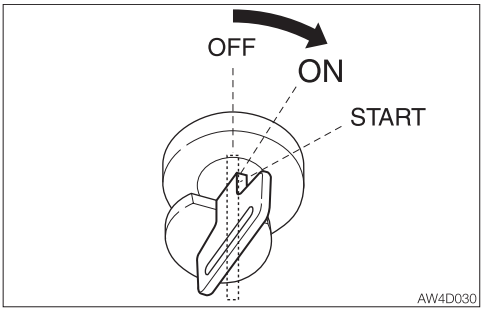

2. Turn the starter switch to the ON position and hold it there for 20 seconds.
   Air is released from the pump during this period.
3. Turn the starter switch to the OFF position, and then to the ON position. Hold it there for 20 seconds again.
   Repeat this step at least twice until air is completely released.

Note: Air in the fuel system causes the engine to fail to start or to have other problems. Always bleed air when the fuel tank is emptied or when there is air in the fuel system.

RESTARTING WHEN THE DEF/ ADBLUE® LEVEL IS LOW OR THE TANK IS EMPTY

1. Turn the starter switch to the OFF position.
2. Refill the DEF/AdBlue® tank
3. Perform the warm-up operation until the warning lamp goes out.
4. If the warning lamp does not go out, turn the starter switch to the OFF position, and then restart the machine.

IF A WARNING LAMP FLASHES

If an alarm is sounded or a warning lamp starts flashing during operation, park the machine in a safe place and perform the remedy procedures described below.

Warning lamp	Lamp name	Causes and remedies
 AW4J0041	**ECM error warning lamp**	There is a problem in the engine. If an error code is displayed on the multi-information display, inform your sales or service dealer of the code and ask for help. Refer to “Multi-information display” on page 2-20 to 2-47. Refer to “Engine error code list” on pages 6-18 to 6-33.
 AN4J005	**Engine stop request warning lamp**	
 AW4J007	**Vehicle and engine emergency lamp**	There is a problem in the machine. Refer to the respective warning lamp below. Get the vehicle or engine error code number from the multi- information display and consult your sales or service dealer referring to the number on the “Vehicle error code list” or “Engine error code list”. Refer to “Multi-information display” on page 2-20 to 2-47. Refer to “Vehicle error code list” on pages 6-16 and 6-17. Refer to “Engine error code list” on pages 6-18 to 6-33.
 AG7J018	**Coolant temperature warning lamp**	The coolant temperature is too high and the engine is overheating. Refer to “If the engine overheats” on page 6-3.
 AN4J006	**Coolant level warning lamp**	The coolant level is too low. Make sure that there is no leakage, and then add the coolant.

Warning lamp	Lamp name	Causes and remedies
 AG7J017	**Engine oil pressure warning lamp**	There is a problem in the engine lubrication system. Check the engine oil level. If the lamp is flashing when the level is normal or even after replenishment of oil or coolant, consult your sales or service dealer. Refer to “Inspecting and replenishing the engine oil” on page 5-24.
 AN4J008	**DEF/AdBlue® level warning lamp**	The DEF/AdBlue® level is low. Make sure that there is no leakage, and then add the DEF/AdBlue® solution. Refer to “Checking the DEF/AdBlue® level and refilling” on page 5-33.
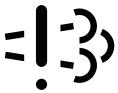 AR0J004	**SCR system warning lamp**	There is a problem in the SCR system. Contact a Takeuchi service dealer for advice.
 AR0J005	**DEF/AdBlue® quality indicator lamp**	The DEF/AdBlue® quality is deteriorated. Replace with the DEF/AdBlue® solution that complies the correct Standard.
 AG7J019	**Battery charge warning lamp**	There is a problem with the V-rib belt or charger. Check the V-rib belt for slack or breakage and adjust as necessary. If the lamp continues flashing after maintenance, there is likely a problem with the charger. Contact a Takeuchi service dealer for assistance. Refer to “Replacing the V-rib belt” on page 5-65.

Warning lamp	Lamp name	Causes and remedies
 AW4J009	**Water separator warning lamp**	Water is in the water separator. Drain water. Refer to “Inspecting the pre-fuel filter and draining” on page 5-26.
 AG7J020	**Air cleaner warning lamp**	The air cleaner is clogged. Clean it. Refer to “Inspecting and cleaning the air cleaner” on page 5-30.
 AU7J002	**Hydraulic oil temp. warning lamp**	The hydraulic oil temperature became too high due to machine overworking. Stop operation, run the engine at low idle and let the hydraulic oil cool down.
 AQ0J004	**Third auxiliary hydraulic warning lamp**	Pressure in the third auxiliary hydraulic line is too low Consult your sales or service dealer for help.
 AW4J010	**Fuel level warning lamp**	The fuel level is too low. Add fuel. Refer to “Inspecting the fuel level” on page 5-27.
 AM1J005	**Lift overload warning lamp**	This lamp starts flashing if the overload warning device is activated. If it occurs, reduce the load to be lifted. Refer to “Lift overload warning switch” on page 2-57.

VEHICLE ERROR CODE LIST

If an error code appears on the display, consult your sales or service dealer.

Error code	Error details
9	Impossible to sense ACC key
402	CAN 0 communication error
502	CAN communication error (ECM)
602	CAN communication error (cluster gauge)
612	CAN communication error (OX)
652	CAN communication error (IOX)
702	CAN communication error (HVAC)
822	CAN communication error (TAKEUCHI Security System)
1703	Main power supply voltage error (too high)
1704	Main power supply voltage error (too low)
1713	OX power supply voltage error (too high)
1714	OX power supply voltage error (too low)
1733	IOX power supply voltage error (too high)
1734	IOX power supply voltage error (too low)
2503	MC sensor voltage error (too high)
2504	MC Sensor voltage error (too low)
2513	IOX sensor voltage error (too high)
2514	IOX sensor voltage error (too low)
3300	Alternator charge faulty
3401	Engine oil pressure error
3500	Overheat
3600	Air cleaner clogged
3700	Water separator
3820	Hydraulic oil temp. too high
3823	Hydraulic oil temp. sensor voltage error (too high)
3824	Hydraulic oil temp. sensor voltage error (too low)

Error code	Error details
5303	Accelerator sensor error (short circuit)
5304	Accelerator sensor error (cable break)
5503	Fuel sender voltage error (too high)
5504	Fuel sender voltage error (too low)
5603	Lift alarm sensor error (short circuit)
5604	Lift alarm sensor error (cable break)
5833	Pressure sensor P3 error (short-circuit)
5834	Pressure sensor P3 error (cable break)
6503	AUX1 slide switch voltage value error (too high)
6504	AUX1 slide switch voltage value error (too low)
6509	AUX1 slide switch neutral error
6519	AUX1 (L) switch error
6529	AUX1 (R) switch error
6609	AUX2 slide switch neutral error
6603	AUX2 slide switch voltage value error (too high)
6604	AUX2 slide switch voltage value error (too low)
6709	AUX3 switch error
6859	Grease level low
8005	Pump PWM output electric current error (too low)
8015	AUX1 (L) PWM output electric current error (too low)
8025	AUX1 (R) PWM output electric current error (too low)
8035	AUX2 (L) PWM output electric current error (too low)
8045	AUX2 (R) PWM output electric current error (too low)
8055	Fan drive PWM output voltage error (too low)
8715	AUX1 pressure SOL output electric current error (too low)
8725	AUX2 pressure SOL output electric current error (too low)
9900	Options settings change (TFM)
9990	Model changed
9991	Unknown model

PWM = Pulse width modulation

ENGINE ERROR CODE LIST

If an error code appears on the display, consult your sales or service dealer.

KWP-Code	SPN	FMI	Error details
38	523925	3	UB3: Short circuit to battery error of actuator relay 3.
40	523927	3	UB5; Short circuit to battery error of actuator relay 5.
42	523924	4	UB2; Short circuit to ground actuator relay 2
43	523925	4	UB3; Short circuit to ground actuator relay 3
44	523926	4	UB4; Short circuit to ground actuator relay 4.
45	168	3	Sensor error battery voltage; signal range check high.
46	168	4	Sensor error battery voltage; signal range check low
47	168	2	High battery voltage; warning threshold exceeded
73	523912	4	@ engines < 4l: Throttle valve error, Open Load or Short circuit to Battery, blocked valve or wrong control signal for valve. @ engines with Burner T4i: Pressure Sensor error after valve (DV2), lower limit reached
84	639	14	CAN-Bus 0 “BusOff-Status”
85	1231	14	CAN-Bus 1 “BusOff-Status”
86	1235	14	CAN-Bus 2 = engine bus “BusOff-Status”
88	102	2	Charged air pressure above warning threshold.
89	102	2	Charged air pressure above shut off threshold.
93	110	1	Physical Range Check low for Coolant temperature.
96	110	3	Sensor error coolant temperature; signal range check high
97	110	4	Sensor error coolant temperature; signal range check low
98	110	0	High coolant temperature; warning threshold exceeded
99	110	0	Coolant temperature; system reaction initiated

KWP-Code	SPN	FMI	Error details
101	111	1	Coolant level too low
121	1109	2	Engine shut off demand ignored
122	523698	11	Shut off request from supervisory monitoring function
129	3224	2	DLC Error of CAN-Receive-Frame AT1IG1Vol; NOx sensor.
130	3224	9	Timeout Error of CAN-Receive-Frame AT1IG1Vol; NOx sensor.
134	523939	9	Broadcast Announce Message of the calibration message of the upstream catalytic NOx sensor has failed.
138	3234	2	DLC Error of CAN-Receive-Frame AT1O1Vol NOx
139	3234	9	Timeout Error of CAN-Receive-Frame AT1OG1Vol.
141	523942	9	Calibration message 1 of the after catalyst NOx sensor has failed.
164	523211	9	Timeout Error of CAN-Receive-Frame EBC1
167	523704	12	Timeout Error of CAN-Transmit-Frame EEC3
168	523935	12	Timeout Error of CAN-Transmit-Frame EEC3VOL1; Engine send messages
169	523936	12	Timeout Error of CAN-Transmit-Frame EEC3VOL2; Engine send messages
171	523212	9	Timeout Error of CAN-Receive-Frame ComEngPrt; Engine Protection
172	523741	14	Engine shut off request through CAN No detailed information!
179	523240	9	Timeout CAN-message FunModCtl; Function Mode Control
198	523216	9	Timeout Error of CAN-Receive-Frame PrHtEnCmd. Pre-heat command, engine command.
281	523766	9	Timeout Error of CAN-Receive-Frame Active TSC1AE
282	523767	9	Timeout Error of CAN-Receive-Frame Passive TSC1AE
283	523768	9	Timeout Error of CAN-Receive-Frame Active TSC1AR
284	523769	9	Timeout Error of CAN-Receive-Frame Passive TSC1AR
291	523776	9	Timeout Error of CAN-Receive-Frame TSC1TE - active
292	523777	9	Passive Timeout Error of CAN-Receive-Frame TSC1TE; Setpoint
293	523778	9	Timeout Error of CAN-Receive-Frame TSC1TR
294	523779	9	Passive Timeout Error of CAN-Receive-Frame TSC1TR

KWP-Code	SPN	FMI	Error details
300	523605	9	Timeout Error of CAN-Receive-Frame TSC1AE; Traction Control
301	523606	9	Timeout Error of CAN-Receive-Frame TSC1AR; Retarder
305	898	9	Timeout Error of CAN-Receive-Frame TSC1TE; Setpoint
306	520	9	Timeout Error of CAN-Receive-Frame TSC1TR; control signal
360	523982	0	Power stage diagnosis disabled; high battery voltage
361	523982	1	Power stage diagnosis disabled; low battery voltage
376	630	12	Access error EEPROM memory (delete)
377	630	12	Access error EEPROM memory (read)
378	630	12	Access error EEPROM memory (write)
381	411	4	Physical range check low for EGR differential pressure
387	523612	12	Internal software error ECU; injection cut off
388	190	0	Engine speed above warning threshold Overspeed detection in component engine protection
389	190	0	Engine speed above warning threshold (FOC-Level 1)
390	190	11	Engine speed above warning threshold (FOC-Level 2)
391	190	14	Engine speed above warning threshold (Overrun Mode)
417	171	3	Sensor error SCR-System environment temperature; DPF-System air inlet temperature; signal range check high
418	171	4	Sensor error SCR-System environment temperature; DPF-System air inlet temperature; signal range check low
419	190	8	Sensor camshaft speed; disturbed signal
420	190	12	Sensor camshaft detection; out of range, signal disrupted; no signal
421	190	2	Offset angle between crank- and camshaft sensor is too large.
422	190	8	Sensor crankshaft detection; out of range, signal disrupted; disturbed signal
423	190	12	Speed detection; out of range, signal disrupted Sensor crankshaft speed; no signal
464	97	3	Sensor error water in fuel; signal range check high
465	97	4	Sensor error water in fuel; signal range check low.
472	94	3	Sensor error low fuel pressure; signal range check high
473	94	4	Sensor error low fuel pressure; signal range check low
474	94	1	Low fuel pressure; warning threshold exceeded
475	94	1	Low fuel pressure; shut off threshold exceeded.

KWP-Code	SPN	FMI	Error details
543	676	11	Cold start device relay error
544	676	11	Cold start aid relay open load
545	729	5	Cold start aid relay open load
549	729	3	Intake Air Heater Device; Short circuit to battery
551	729	4	Air intake heater; Short circuit to ground error for power stage on CJ945.
559	523895	13	Check of missing injector adjustment value programming (IMA) injector 1 (in firing order).
560	523896	13	Check of missing injector adjustment value programming (IMA) injector 2 (in firing order).
561	523897	13	Check of missing injector adjustment value programming (IMA) injector 3 (in firing order).
562	523898	13	Check of missing injector adjustment value programming (IMA) injector 4 (in firing order).
563	523899	13	Check of missing injector adjustment value programming (IMA) injector 5 (in firing order).
564	523900	13	Check of missing injector adjustment value programming (IMA) injector 6 (in firing order).
565	523350	4	Injector cylinder-bank 1; short circuit
566	523352	4	Injector cylinder-bank 2; short circuit
567	523354	12	Injector power stage output defect
568	651	5	Injector 1 (in firing order); interruption of electric connection
569	652	5	Injector 2 (in firing order); interruption of electric connection
570	653	5	Injector 3 (in firing order); interruption of electric connection
571	654	5	Injector 4 (in firing order); interruption of electric connection
572	655	5	Injector 5 (in firing order); interruption of electric connection
573	656	5	Injector 6 (in firing order); interruption of electric connection
580	651	3	Injector 1 (in firing order); short circuit
581	652	3	Injector 2 (in firing order); short circuit
582	653	3	Injector 3 (in firing order); short circuit
583	654	3	Injector 4 (in firing order); short circuit
584	655	3	Injector 5 (in firing order); short circuit
585	656	3	Injector 6 (in firing order); short circuit

KWP-Code	SPN	FMI	Error details
592	523615	5	Metering unit (Fuel-System); open load
594	523615	3	Metering unit (Fuel-System); short circuit to battery high side
595	523615	4	Metering unit (Fuel-System); short circuit to ground high side
596	523615	3	Metering unit (Fuel-System); short circuit to battery low side
597	523615	4	Metering Unit (Fuel-System); short circuit to ground low side
599	523615	4	Metering unit, short circuit to ground
612	523612	12	Internal ECU monitoring detection reported error
613	523612	12	ECU reported internal software error Internal ECU monitoring detection reported error
614	523612	12	ECU reported internal software error
615	523612	12	ECU reported internal software error.
616	523612	12	ECU reported internal software error
617	523612	12	ECU reported internal software error
618	523612	12	ECU reported internal software error
619	523612	12	Injection system, electrical error injectors
620	523612	12	ECU reported internal software error
621	523612	12	ECU reported internal software error
623	523612	12	ECU reported internal software error
624	523612	12	ECU reported internal software error
625	523612	12	ECU reported internal software error
627	523612	12	ECU reported internal software error
628	523612	12	ECU reported internal software error
629	523612	12	Diagnostic fault check to report the accelerator pedal position error
630	523612	12	Diagnostic fault check to report the engine speed error
631	523612	12	Error in the plausibility of the injection energizing time
632	523612	12	Error in the plausibility of the start of energizing angles
633	523612	12	Diagnostic fault check to report the error due to non plausibility in ZFC

KWP-Code	SPN	FMI	Error details
634	523612	12	Diagnosis fault check to report the demand for normal mode due to an error in the PoI2 quantity
635	523612	12	Diagnosis fault check to report the error to demand for an ICO due to an error in the PoI2 shut-off
636	523612	12	Diagnosis fault check to report the error to demand for an ICO due to an error in the PoI3 efficiency factor
637	523612	12	Internal ECU monitoring detection reported error
638	523612	12	Monitoring of Fuel Quantity Correction
639	523612	12	Diagnostic fault check to report the plausibility error in rail pressure monitoring
640	523612	12	Diagnostic fault check to report the error due to torque comparison
641	523612	12	Diagnosis of curr path limitation forced by ECU monitoring level 2
642	523612	12	Diagnosis of lead path limitation forced by ECU monitoring level 2
643	523612	12	Diagnosis of set path limitation forced by ECU monitoring level 2.
644	523612	3	Reported Over Voltage of Supply
646	523612	4	Reported Under Voltage of Supply
714	523612	12	Diagnostic fault check to report WDA active due to errors in query/response communication
715	523612	12	Diagnostic fault check to report ABE active due to undervoltage detection
716	523612	12	Diagnostic fault check to report ABE active due to overvoltage detection
717	523612	12	Diagnostic fault check to report WDA/ABE active due to unknown reason
732	100	3	Sensor error oil pressure; signal range check high
733	100	4	Sensor error oil pressure sensor; signal range check low
736	100	1	Low oil pressure; warning threshold exceeded
737	100	1	Low oil pressure; shut off threshold exceeded
750	107	3	Sensor error airfilter differential pressure; short circuit to battery
751	107	0	Sensor error airfilter differential pressure; short circuit to ground
752	107	0	Air filter differential pressure; short circuit to ground

KWP-Code	SPN	FMI	Error details
772	102	2	Pressure downstream charge air cooler, plausibility error
774	102	1	Pressure downstream charge air cooler, pressure below lower physical threshold
776	102	3	Pressure downstream charge air cooler, short circuit to battery or open load
777	102	4	Pressure downstream charge air cooler, short circuit to ground
795	411	3	Sensor error differential pressure Venturi unit (EGR), signal range check low.
796	411	4	Sensor error differential pressure Venturi unit (EGR), signal range check high.
807	3253	2	Differential pressure DPF, plausibility error
809	3251	0	Differential pressure DPF maximum value is exceeded
810	3251	0	Differential pressure sensor across DPF exceeds warning high limit
812	3251	1	Differential pressure DPF, pressure below lower shutoff threshold.
813	3251	1	Differential pressure DPF, pressure below lower warning threshold.
814	3253	3	Electrical error differential pressure B58 (DPF). (Signal range check high)
815	3253	4	Electrical error differential pressure (DPF). Signal range check low.
825	523009	9	The pressure relief valve (PRV) has reached the number of allowed activations.
826	523470	2	Pressure relief valve is forced to open, perform pressure increase.
827	523470	2	Pressure Relief Valve (PRV) forced to open. Performed by pressure increase.
828	523470	12	Pressure Relief Valve (PRV) forced to open. Shutoff conditions.
829	523470	12	Pressure Relief Valve (PRV) forced to open. Warning conditions.
830	523470	14	Open Pressure Relief Valve (PRV)
831	523470	11	Pressure Relief Valve (PRV) error; Rail pressure out of tolerance range.
832	523470	11	Rail pressure out of tolerance range. The PRV can not be opened at this operating point with a pressure shock.
833	523009	10	Open time of Pressure Relief Valve (PRV) for wear out monitoring had exceeded
849	1176	3	Pressure sensor upstream turbine, signal range check (SRC) high.
850	1176	4	Pressure sensor upstream turbine, signal range check (SRC) low.

KWP-Code	SPN	FMI	Error details
856	523613	0	Rail pressure metering unit, Positive governor deviation.
857	523613	0	Rail pressure metering unit, Rail pressure disrupted. Maximum positive deviation of rail pressure exceeded.
858	523613	0	Rail pressure metering unit, Rail pressure disrupted. Maximum positive deviation of rail pressure in metering unit exceeded (RailMeUn1).
859	523613	0	Rail pressure metering unit, Rail pressure below the target range .(RailMeUn2) Rail system leakage detected. (RailMeUn10)
861	523613	1	Rail pressure metering unit, Minimum rail pressure exceeded (RailMeUn3) Negative deviation of rail pressure second stage (RailMeUn22)
862	523613	0	Rail pressure metering unit, Maximum rail pressure exceeded.
864	523613	2	Rail pressure metering unit, Setpoint of metering unit in overrun mode not plausible.
876	523470	7	Maximum rail pressure exceeded (PRV).
877	157	3	Sensor error rail pressure. Sensor voltage above upper limit.
878	157	4	Sensor error rail pressure. Sensor voltage below lower limit.
925	523720	8	DEF supply module heater temperature; duty cycle in failure range.
926	523720	8	DEF supply module heater temperature; duty cycle in invalid range.
927	523721	11	Urea supply module temperature measurement not available.
928	523722	8	DEF supply module PWM signal; period outside valid range.
929	523722	8	Detect faulty PWM signal from Supply Module.
930	523721	8	DEF supply module temperature; duty cycle in failure range.
931	523721	8	Urea supply module temperature; duty cycle in invalid range.
932	29	3	Hand throttle idle validation switch; short circuit to battery
935	91	3	Sensor error accelerator pedal. Signal range check high.
937	29	4	Hand throttle; short circuit to ground
940	91	4	Sensor error accelerator pedal. Signal is below the range.

KWP-Code	SPN	FMI	Error details
946	1079	13	Failure of sensor supply voltage 1.
947	1080	13	Failure of sensor supply voltage 2.
948	523601	13	Failure of sensor supply voltage 3.
956	677	3	Starter relay high side. Short circuit to battery.
957	677	4	Starter relay high side short circuit to ground.
958	677	5	Starter relay low side no load error.
960	677	3	Starter relay low side short circuit to battery.
961	677	4	Starter relay low side short circuit to ground.
973	523612	14	Software reset CPU SWReset_0
974	523612	14	Software reset CPU SWReset_1
975	523612	14	Software reset CPU SWReset_2
976	91	11	Plausibility error between APP1 and APP2 or APP1 and idle switch.
980	523550	12	Terminal 50 was operated too long
994	105	3	Electrical error charged air temperature. Signal range check high.(SRC)
995	105	4	Electrical error charged air temperature. Signal range check low.
996	105	0	Charged air cooler temperature. System reaction initiated. High charged air cooler temperature. Warning threshold exceeded.
997	105	0	Low charged air cooler temperature. Shut off threshold exceeded.
1007	412	3	Electrical error EGR cooler downstream temperature. Signal range check high.
1008	412	4	Electrical error EGR cooler downstream temperature. Signal range check low.
1011	523960	0	Physical range check high for EGR cooler downstream temperature.

KWP-Code	SPN	FMI	Error details
1014	51	6	Actuator error EGR-Valve (2.9;3.6) or Throttle-Valve (4.1;6.1;7.8). Signal range check high.
1015	520521	5	Actuator error EGR-Valve (2.9;3.6) or Throttle-Valve (4.1;6.1;7.8); signal range check low.
1016	51	7	Actuator position for EGR-Valve (2.9;3.6) or Throttle-Valve (4.1;6.1;7.8) not plausible.
1022	51	6	Actuator error EGR-Valve (2.9;3.6) or Throttle-Valve (4.1;6.1;7.8); signal range check high
1023	51	5	Actuator error EGR-Valve (2.9;3.6) or Throttle-Valve (4.1;6.1;7.8); signal range check low
1024	51	3	Position sensor error of actuator EGR-Valve (2.9;3.6) or Throttle-Valve (4.1;6.1;7.8). Signal range check high.
1025	51	4	Position sensor error actuator EGR-Valve (2.9;3.6) or Throttle-Valve (4.1;6.1;7.8). Signal range check low.
1026	4769	2	Temperature downstream DOC, plausibility error
1029	4766	0	Temperature downstream DOC, temperature above upper shutoff threshold
1030	4766	0	Temperature downstream DOC, temperature above upper warning threshold
1034	4769	3	Sensor error exhaust gas temperature downstream (DOC); signal range check high
1035	4769	4	Sensor error exhaust gas temperature downstream (DOC); signal range check low
1036	4768	2	Temperature upstream DOC, plausibility error
1039	4765	0	Temperature upstream DOC, temperature above upper shutoff threshold
1040	4765	0	Temperature upstream DOC, temperature above upper warning threshold
1044	4768	3	Electrical error exhaust gas temperature upstream (DOC); signal range check high
1045	4768	4	Electrical error exhaust gas temperature upstream (DOC); signal range check low
1069	4360	0	Exhaust temperature upstream SCR-Cat, temperature above upper physical threshold
1070	4360	1	Sensed exhaust temperature before SCR-Cat is < physical low limit
1072	4361	3	Sensor error DEF catalyst exhaust gas temperature upstream; signal range check high
1073	4361	4	Sensor error DEF catalyst exhaust gas temperature upstream; signal range check low

KWP-Code	SPN	FMI	Error details
1075	3361	6	DEF dosing valve; power at the end of injection too high
1077	3361	3	DEF dosing valve; short circuit to battery on low side
1078	3361	3	DEF dosing valve; short circuit to battery or open load on high side
1079	3361	4	Urea dosing valve; short circuit to ground or open load on low side
1080	3361	4	DEF dosing valve; short circuit on high side
1090	4345	5	SCR heater relay DEF returnline primary side; open load
1092	4345	3	SCR heater DEF return line; short circuit to battery
1093	4345	4	SCR heater DEF return line; short circuit to ground
1094	4343	5	SCR heater relay DEF pressure line primary side; open load
1096	4343	3	SCR heater DEF pressure line; short circuit to battery
1097	4343	4	SCR heater DEF pressure line; short circuit to ground
1098	523718	5	Tank heating valve; open load
1100	523718	3	SCR main relay (primary side); short circuit to battery
1101	523718	4	SCR main relay (primary side); short circuit to ground
1102	4341	5	SCR heater relay DEF supply line primary side; open load
1104	4341	3	SCR-heater DEF supply line; short circuit to battery
1105	4341	4	SCR-heater DEF supply line; short circuit to ground
1106	523719	5	SCR heater relay DEF supply module primary side; open load
1108	523719	3	SCR heater DEF supply module; short circuit to battery
1109	523719	4	SCR heater DEF supply module; short circuit to ground
1110	4366	5	SCR tank heating valve primary side; open load
1112	4366	3	SCR Tank heating valve; short circuit to battery
1113	4366	4	SCR Tank heating valve; short circuit to ground
1117	523632	11	Pump motor not available for actuation
1118	4375	5	Urea pump motor; open load
1120	4375	3	Urea pump motor; short circuit to battery
1121	4375	4	Urea pump motor; short circuit to ground
1122	4334	0	Supply module DEF, DEF pressure above upper physical threshold

KWP-Code	SPN	FMI	Error details
1127	523632	3	Sensor error urea pump pressure; signal range check high
1128	523632	4	Sensor error urea pump pressure; signal range check low
1129	4376	5	SCR reversal valve; open load
1131	4376	3	SCR reversal valve; short circuit to battery
1132	4376	4	SCR reversing valve; short circuit to ground
1135	3031	0	DEF tank, DEF temperature in DEF tank is too high.
1136	3031	1	DEF tank, DEF temperature below lower physical threshold
1157	97	12	Water in fuel level prefilter; maximum value exceeded
1170	523612	12	Internal software error ECU
1180	168	0	Physical range check high for battery voltage
1181	168	1	Physical range check low for battery voltage
1183	172	1	Air inlet filter sensor out of physical range check
1223	51	5	Actuator EGR-Valve (2.9;3.6) or Throttle-Valve (4.1;6.1;7.8); open load
1224	51	6	Actuator EGR-Valve (2.9;3.6) or Throttle-Valve (6.1,7.8); over current
1226	51	3	EGR-Valve (2.9;3.6) or Throttle-Valve (4.1;6.1;7.8); short circuit to battery
1227	51	3	EGR-Valve (2.9;3.6) or Throttle-Valve (4.1;6.1;7.8); short circuit to battery
1228	51	4	EGR-Valve (2.9;3.6) or Throttle-Valve (4.1;6.1;7.8); short circuit to ground
1229	51	4	EGR-Valve (2.9;3.6) or Throttle-Valve (4.1;6.1;7.8); short circuit to ground
1230	51	6	Actuator error EGR-Valve (2.9;3.6) or Throttle-Valve (4.1;6.1;7.8); Overload by short-circuit
1231	51	11	Power stage over temperature due to high current.
1232	51	4	Actuator EGR valve (2.9;3.6) or throttle valve (4.1;6.1;7.8); Voltage below threshold.
1239	523984	3	UB7; Short circuit to battery error of actuator relay 7
1241	523986	4	UB6; Short circuit to ground actuator relay 6
1242	523987	4	UB7; Short circuit to ground actuator relay 7

KWP-Code	SPN	FMI	Error details
1337	2797	4	Timeout of Short-Circuit Ground Diagnosis Cyl. Bank0;_ IVDiaShCirGndToutBnk_0
1338	2798	4	Timeout of Short-Circuit Ground Diagnosis Cyl. Bank1;_ IVDiaShCirGndToutBnk_1
1339	2797	4	Injector diagnostic; Short circuit to ground cylinder bank 0
1340	2798	4	Injector diagnostic; Short circuit to ground cylinder bank 1
1381	164	2	Rail pressure safety function is not executed correctly ()
1398	1136	0	Physical range check high for ECU temperature
1423	51	0	Warning threshold for an internal actuator error exceeded, < 4L EGR.actuator and >4L Air Intake Flap
1424	51	1	Shut off threshold for an internal actuator error exceeded, <4L EGR.actuator and >4L Air Intake Flap
1455	3711	12	Temperature during stand-still main phase too low or too high
1505	524057	2	Fuel low pressure pump; error pressure build up
1533	524074	9	NOx sensor downstream SCR-CAT, sensor internally open load
1534	524075	11	NOx sensor downstream SCR-CAT, sensor internally short circuit
1535	524076	9	NOx sensor upstream SCR-CAT, sensor internally open line
1536	524077	11	NOx sensor upstream SCR-CAT, sensor internally short circuit
1537	524078	9	NOx sensor downstream SCR-CAT, lambda value above upper physical threshold
1538	524079	9	NOx sensor downstream SCR-CAT, lambda value below lower physical threshold
1539	524080	9	NOx sensor upstream SCR-CAT, lambda value above upper physical threshold
1540	524081	9	NOx sensor upstream SCR-CAT, lambda value below lower physical threshold
1555	524063	5	Relay Urea backflow line heater: broken wiring detected (open load) Row engine: SCR-backflow line (K29) V-engine: Master: SCR-suction / backflow line (K32.1) Slave: SCR-suction / backflow line (K32.2)
1556	524063	5	SCR main relay not connected
1557	524063	5	SCR heater pressure line; open load
1558	524063	3	SCR heater main relay; short circuit to battery
1559	524063	4	SCR heater main relay load side (K31) on heating valve (Y31), Short cut to ground.
1560	524063	5	Relay Urea suction line: broken wiring detected (open load) Row engine: SCR suction line (K28) V-engine: Master: common SCR-suction line (K28) Slave: common SCR backflow line (K29)
1561	524063	5	SCR heater supply module; open load
1562	524063	5	SCR heater tank; open load

KWP-Code	SPN	FMI	Error details
1565	524065	0	Pressure sensor upstream SCR-CAT, pressure above upper physical threshold
1566	524065	1	Pressure sensor upstream SCR-CAT, pressure below lower physical threshold
1569	524065	3	Pressure sensor upstream SCR-CAT; short circuit battery or open load
1570	524065	4	Pressure sensor upstream SCR-CAT; short circuit ground
1581	524067	0	DEF supply module, heater temperature above upper physical threshold
1582	524067	1	DEF supply module, heater temperature below lower physical threshold
1585	524067	0	DEF supply module, temperature above upper physical threshold
1586	524067	1	DEF supply module, temperature below lower physical threshold
1598	524065	2	Pressure sensor upstream SCR-CAT, plausibility error
1639	524147	13	SCR System, pressure build up not possible
1646	524063	12	DEF supply module, time for defrosting too long
1647	524063	12	DEF tank, time for defrosting too long
1655	1761	14	DEF tank, DEF level below first warning threshold
1672	524118	9	Timeout error of CAN-Receive-Frame ComRxCM1
1676	524104	9	Timeout error of CAN-Receive-Frame ComRxDPFCtl
1698	524133	2	HMI system; set if restore button blocked
1699	524134	0	DPF, ash load exceeds the shutoff threshold
1700	524134	0	DPF, ash load exceeds the warning threshold
1701	524135	0	DPF, soot load exceeds the shutoff threshold
1702	524135	14	DPF, soot load exceeds the service request threshold
1703	524135	0	DPF, soot load exceeds the warning threshold
1752	2791	7	EGR actuator, actuator blocked
1753	2791	2	EGR actuator, CAN error
1754	2791	13	EGR actuator, EOL calibration error
1755	2791	12	EGR Actuator, internal electrical fault
1756	2791	13	EGR actuator, learning process aborted
1757	2791	6	EGR actuator current is above maximum threshold
1758	2791	3	EGR actuator supply voltage is above the maximum threshold
1759	2791	4	EGR actuator supply voltage is below minimum threshold.
1760	2791	13	EGR actuator, learning process out of range
1761	2791	7	EGR actuator, broken spring detected.
1762	2791	16	EGR actuator, temperature high.
1763	2791	0	EGR actuator, temperature critical high

KWP-Code	SPN	FMI	Error details
1857	523612	12	Engine starter, plausibility error of starter release condition
1858	524147	7	SCR-System, reverting valve blocked
1859	524175	0	SCR-CAT, NOx emissions above maximum threshold
1864	524178	7	SCR System, DEF pressure out of range
1866	4334	2	DEF supply module pressure, plausibility error
1867	524067	2	Supply module heater temperature, plausibility error
1868	524067	2	Supply module temperature, plausibility error
1869	1761	2	DEF tank level, plausibility error
1874	524152	2	Urea Quality Sensor; Timeout CAN message
1875	524153	2	Urea tank level & urea tank temperature via CAN bus, timeout of CAN message
1881	4768	2	Exhaust gas temperature sensors up-and downstream DOC are physically swapped
1891	524190	14	Inducement level 1 active
1892	524191	14	Inducement level 2 active
1893	524193	8	The standstill-regeneration mode time exceeds the long limit threshold. Vehicle was too long or too often in standstill mode. Change oil and reset counter.
1894	524194	8	The standstill-regeneration mode time exceeds the short-limit. Vehicle was too long or too often within a short time in standstill mode. Change oil and reset counter.
1895	3519	12	DEF tank temperature, temperature too high
1896	3520	3	DEF quality sensor, short circuit to battery or open load
1897	3520	4	DEF quality sensor, short circuit to ground
1898	3519	3	DEF quality sensor, internal temperature sensor short circuit to battery or open load
1899	3519	4	DEF quality sensor, internal temperature sensor short circuit to ground

KWP-Code	SPN	FMI	Error details
1900	524195	14	Standstill request due to crystallization ignored too long
1904	3520	2	DEF quality sensor, bad DEF quality detected or no DEF measuring possible.
1905	3520	8	DEF quality sensor, measurement conditions not fulfilled
1907	3520	13	Urea quality at UQS invalid
1908	3519	13	Temperature at UQS invalid
1909	4365	12	Urea Tank Temperature is above the warning threshold
1910	3532	13	DEF quality sensor, tank level; DEF level out of physical range
1911	3532	3	The DEF Level at UQS out of max. physical range
1912	3532	4	Quality at UQS out of min. physical range
1913	4365	13	DEF quality sensor, tank temperature; Temperature out of physical range
1914	4365	3	DEF quality sensor, tank temperature; Short circuit to battery or open load
1915	4365	4	DEF quality sensor, tank temperature; Short circuit to ground
1917	3936	14	Standstill request ignored too long.
1918	3936	14	Standstill time based escalation requests Inducement step 2
2007	524267	14	Announcement triggers the Inducement Level 2
2008	524025	8	Max. launch time for standstill exceeded (60min).
2011	4171	2	Dynamic temperature check of temp before SCR
2013	524147	13	Set together with DFC_SCRCoBldUpLoPres. DFC_SCRCoBldUpLoPresRst is only used for inducement purposes. It ensures that legal inducement is working correctly.
2014	3520	1	Bad DEF quality
2032	411	2	Insufficient change in EGR venturi signal.

OTHER SYMPTOMS

For symptoms not included in the table below or if the problem persists after the proper remedies have been taken, consult your sales or service dealer.

Symptoms	Major causes	Remedies
Left and right operating levers do not move smoothly	• Insufficient grease on the left and right operating levers	• Grease the levers. Refer to page 5-76.
Travel levers, blade lever and pedals do not move smoothly	• Insufficient grease on travel levers, blade lever and pedals	• Grease the levers and pedals. Refer to page 5-76.
Operation of hoe attachment, dozer blade, auxiliary hydraulics, slewing or traveling is not possible.	• Safety lock lever is raised (locked)	• Lower (release) the safety lock lever. Refer to page 2-62.
	• Fuse is blown	• Replace the fuse. Refer to page 6-7.
Digging force is insufficient	• Hydraulic oil level too low	• Add to the specified level. Refer to page 5-28.
	• Hydraulic oil is not warm enough	• Perform the warm-up. Refer to pages 3-10 to 3-11.
	• Air cleaner is clogged	• Clean the air cleaner. Refer to page 5-30.
	• Hydraulic oil is not of suitable type	• Replace the hydraulic oil. Refer to page 5-66.
Traveling is not possible or not smooth	• Stones or foreign objects are stuck	• Remove the foreign object.
Machine veers to the right/left	• Stones or foreign objects are stuck	• Remove the foreign object.
	• Crawler belt tension is faulty.	• Check and adjust (ask your sales or service dealer). Refer to pages 5-40 to 5-41.

Symptoms	Major causes	Remedies
Travel speed cannot be changed	• Fuse is blown	• Replace the fuse. Refer to page 6-7.
Slewing is not possible or not smooth	• Insufficient grease on slew bearing	• Grease the bearing. Refer to page 5-54.
Hydraulic oil temperature is too high	• Hydraulic oil level too low	• Add up to the specified level. Refer to page 5-28.
Starter motor turns but engine does not start	• Insufficient fuel	• Add fuel. Refer to page 5-27.
	• Air in fuel system	• Bleed air. Refer to page 6-11.
	• Water in fuel system	• Drain water. Refer to page 5-42.
	• Fuel is frozen.	• Warm the fuel pipe with hot water or wait until the ambient temperature becomes high.
	• Engine control system is faulty.	• Adjust or repair (ask your sales or service dealer).
	• Fuel line is faulty.	• Adjust or repair (ask your sales or service dealer).
	• Preheating device is faulty.	• Adjust or repair (ask your sales or service dealer).
Crawlers come off	• Crawlers too loose	• Check and adjust (ask your sales or service dealer). Refer to pages 5-40 to 5-41.

Symptoms	Major causes	Remedies
Engine exhaust is white or bluish	• Excessive engine oil	• Adjust to the specified level. Refer to page 5-24.
	• Insufficient engine warm-up.	• Perform the warm-up operation. Refer to page 3-6.
	• Engine control system is faulty.	• Adjust or repair (ask your sales or service dealer).
	• Fuel line is faulty.	• Adjust or repair (ask your sales or service dealer).
	• Prolonged idling (approx. two hours or more)	• Increase the engine RPM and check for smoke.
	• Poor fuel	• Replace the fuel.
Engine exhaust is occasionally black	• Air cleaner is clogged	• Clean the air cleaner. Refer to page 5-30.
	• Engine control system is faulty.	• Adjust or repair (ask your sales or service dealer).
	• Fuel line is faulty.	• Adjust or repair (ask your sales or service dealer).
	• Clogging in the exhaust line.	• Adjust or repair (ask your sales or service dealer).
Irregular noise is produced from the engine (combustion or mechanical noise)	• Low quality fuel is being used	• Replace the fuel.
	• Engine is overheating	• Refer to “If the engine overheats” on page 6-3.
	• Damage inside the muffler	• Replace the muffler. For replacement, ask your sales or service dealer.

LOWERING THE BOOM TO THE GROUND

If the hoe attachment must be lowered to the ground while the engine is stopped, use the following procedure.

Procedure 1 (when engine can be started)
Perform this operation within 10 minutes after the engine stopping.
1. Sit at the operator's seat.
2. Turn the starter switch to the ON position.
3. Lower the safety lock lever to the unlock position
4. Slowly push the operating lever forward to lower the boom.

Procedure 2 (when engine cannot be started)
This operation is dangerous and requires experience. Ask your sales or service dealer for it.

⚠ WARNING

- **Stop the engine and allow the machine to cool down before performing maintenance.**
  - **The engine and the hydraulic system and many other parts of the machine are hot immediately after the engine is stopped. Touching these parts will cause burns.**
  - **The hydraulic oil is also hot and under high pressure immediately after the engine is stopped.**
    Be careful when loosening the caps or plugs. Working on the machine under these conditions could result in burns or injuries due to the hot oil spurting out.
- **Keep away from the working area when the hoe attachment is lowered. You may be hit by dirt falling out of the bucket or the hoe attachment as it drops.**
- **Stand in a position away from danger of lowering boom and loosen the hose nut. Otherwise, you could be hit by the boom.**
- **Do not loosen or remove the hoses not located in the specified places. Oil may spurt out if wrongly handled.**

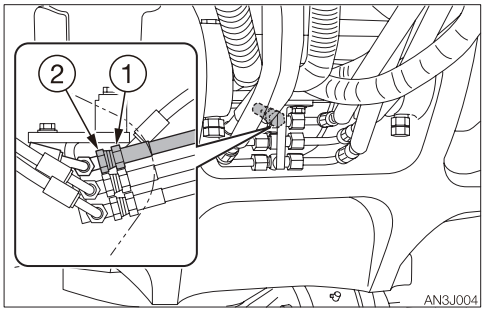

1. Place a pan under the hose to catch the waste oil.
2. Hold the hose fitting (1) with a wrench and loosen the hose nut (2) with another wrench.
3. The oil in the boom cylinder is drained and the hoe attachment is lowered.
4. After the hoe attachment is lowered to the ground, check the safety and stability of the machine.
5. Hold the hose fitting (1) with a wrench and tighten the hose nut (2) with another wrench.
   - Tightening torque: 31.4 N·m (23.1 ft-lb.)

TOWING

⚠ WARNING

When towing, serious injury or death could result, if performed incorrectly or the wire rope being used is inappropriate or not properly inspected.

- **It becomes dangerous if the wire rope breaks or becomes disengaged. Use a wire rope appropriate for the required tractive force.**
- **Do not use a wire rope that is kinked, twisted or otherwise damaged.**
- **Do not apply heavy loads abruptly to the wire rope.**
- **Wear safety gloves when handling the wire rope.**
- **Make sure there is an operator on the machine being towed as well as on the machine that is towing.**
- **Never tow on slopes.**
- **Do not let anyone come near to the wire rope while towing.**

IMPORTANT: Do not tow a machine if its engine does not start or if the machine does not run. Doing so could damage the machine being towed.

Towing the machine

Use the procedure described below to tow heavy objects or the machine itself if it should get stuck in the mud and not be able to get out on its own.

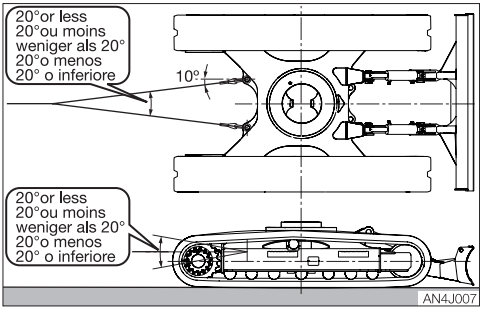

- Permissible forces: 222.9 kN (50108 lbf)

1. Attach the wire rope to the shackle (1).
2. Fasten the shackle (1) to the towing hole (2).
3. Make sure that the wire rope is at a cone angle of 20° or less to the travel frame.
4. Move the machine to tension the wire rope.
5. Move the machine at a low speed of 2 km/h (1.24 mph) or less to a place (convenient location for repair) a short distance from the site.

IF THE CAB IS DAMAGED

⚠ WARNING

Immediately replace the damaged cab. Serious injury or death may occur if the machine is operated with damaged cab. Do not operate the machine until the replacement is complete. Do not try to repair the damaged cab by welding. Doing so could endanger the safety of the cab.

Cab part number: 05786-00161

<Applicable machine models 514700393 or later>

EXHAUST GAS CONTROL SYSTEM ERROR

ERROR CODE LIST

If the exhaust gas control system detects an error, the ECM error warning lamp flashes and the following error codes appear.
If an error code appears, immediately repair the fault part detected, or consult your sales or service dealer for help.

N: NCD
P: PCD
NCD: NOx Control Diagnostic system
PCD: Particulate Control Diagnostic system

KWP-Code	SPN	FMI	Error details	PCD or NCD Error	Limited engine (Induce-ment)
129	3224	2	DLC Error of CAN-Receive-Frame AT1IG1Vol; NOx sensor.	N	√
130	3224	9	Timeout Error of CAN-Receive-Frame AT1IG1Vol; NOx sensor.	N	√
134	523939	9	Broadcast Announce Message of the calibration message of the upstream catalytic NOx sensor has failed.	N	√
138	3234	2	DLC Error of CAN-Receive-Frame AT1O1Vol NOx	N	√
139	3234	9	Timeout Error of CAN-Receive-Frame AT1OG1Vol.	N	√
141	523942	9	Calibration message 1 of the after catalyst NOx sensor has failed.	N	√
168	523935	12	Timeout Error of CAN-Transmit-Frame EEC3VOL1; Engine send messages	N	√
169	523936	12	Timeout Error of CAN-Transmit-Frame EEC3VOL2; Engine send messages	N	√
417	171	3	Sensor error SCR-System environment temperature; DPF-System air inlet temperature; signal range check high	N	√
418	171	4	Sensor error SCR-System environment temperature; DPF-System air inlet temperature; signal range check low	N	√
795	411	3	Sensor error differential pressure Venturi unit (EGR), signal range check low.	N	√
796	411	4	Sensor error differential pressure Venturi unit (EGR), signal range check high.	N	√

KWP-Code	SPN	FMI	Error details	PCD or NCD Error	Limited engine (Induce-ment)
807	3253	2	Differential pressure DPF, plausibility error	P	√
809	3251	0	Differential pressure DPF maximum value is exceeded	P	√
810	3251	0	Differential pressure sensor across DPF exceeds warning high limit	P	√
812	3251	1	Differential pressure DPF, pressure below lower shutoff threshold.	P	√
813	3251	1	Differential pressure DPF, pressure below lower warning threshold.	P	√
814	3253	3	Electrical error differential pressure B58 (DPF). (Signal range check high)	P	√
815	3253	4	Electrical error differential pressure (DPF). Signal range check low.	P	√
849	1176	3	Pressure sensor upstream turbine, signal range check (SRC) high.	N	√
850	1176	4	Pressure sensor upstream turbine, signal range check (SRC) low.	N	√
925	523720	8	DEF supply module heater temperature; duty cycle in failure range.	N	√
926	523720	8	DEF supply module heater temperature; duty cycle in invalid range.	N	√
927	523721	11	Urea supply module temperature measurement not available.	N	√
928	523722	8	DEF supply module PWM signal; period outside valid range.	N	√
929	523722	8	Detect faulty PWM signal from Supply Module.	N	√
930	523721	8	DEF supply module temperature; duty cycle in failure range.	N	√
931	523721	8	Urea supply module temperature; duty cycle in invalid range.	N	√
1014	51	6	Actuator error EGR-Valve (2.9;3.6) or Throttle-Valve (4.1;6.1;7.8). Signal range check high.	N	
1015	520521	5	Actuator error EGR-Valve (2.9;3.6) or Throttle-Valve (4.1;6.1;7.8); signal range check low.	N	
1016	51	7	Actuator position for EGR-Valve (2.9;3.6) or Throttle-Valve (4.1;6.1;7.8) not plausible.	N	
1022	51	6	Actuator error EGR-Valve (2.9;3.6) or Throttle-Valve (4.1;6.1;7.8); signal range check high	N	
1023	51	5	Actuator error EGR-Valve (2.9;3.6) or Throttle-Valve (4.1;6.1;7.8); signal range check low	N	
1024	51	3	Position sensor error of actuator EGR-Valve (2.9;3.6) or Throttle-Valve (4.1;6.1;7.8). Signal range check high.	N	
1025	51	4	Position sensor error actuator EGR-Valve (2.9;3.6) or Throttle-Valve (4.1;6.1;7.8). Signal range check low.	N	

KWP-Code	SPN	FMI	Error details	PCD or NCD Error	Limited engine (Induce-ment)
1026	4769	2	Temperature downstream DOC, plausibility error	P	
1034	4769	3	Sensor error exhaust gas temperature downstream (DOC); signal range check high	P	
1035	4769	4	Sensor error exhaust gas temperature downstream (DOC); signal range check low	P	
1036	4768	2	Temperature upstream DOC, plausibility error	P	
1044	4768	3	Electrical error exhaust gas temperature upstream (DOC); signal range check high	P	
1045	4768	4	Electrical error exhaust gas temperature upstream (DOC); signal range check low	P	
1070	4360	1	Sensed exhaust temperature before SCR-Cat is < physical low limit	N	√
1072	4361	3	Sensor error DEF catalyst exhaust gas temperature upstream; signal range check high	P, N	√
1073	4361	4	Sensor error DEF catalyst exhaust gas temperature upstream; signal range check low	P, N	√
1075	3361	6	DEF dosing valve; power at the end of injection too high	N	√
1077	3361	3	DEF dosing valve; short circuit to battery on low side	N	√
1078	3361	3	DEF dosing valve; short circuit to battery or open load on high side	N	√
1079	3361	4	Urea dosing valve; short circuit to ground or open load on low side	N	√
1080	3361	4	DEF dosing valve; short circuit on high side	N	√
1117	523632	11	Pump motor not available for actuation	N	√
1118	4375	5	Urea pump motor; open load	N	√
1121	4375	4	Urea pump motor; short circuit to ground	N	√
1122	4334	0	Supply module DEF, DEF pressure above upper physical threshold	N	√
1127	523632	3	Sensor error urea pump pressure; signal range check high	N	√
1128	523632	4	Sensor error urea pump pressure; signal range check low	N	√
1129	4376	5	SCR reversal valve; open load	N	√
1131	4376	3	SCR reversal valve; short circuit to battery	N	√
1132	4376	4	SCR reversing valve; short circuit to ground	N	√
1135	3031	0	DEF tank, DEF temperature in DEF tank is too high.	N	√
1136	3031	1	DEF tank, DEF temperature below lower physical threshold	N	

KWP-Code	SPN	FMI	Error details	PCD or NCD Error	Limited engine (Induce-ment)
1223	51	5	Actuator EGR-Valve (2.9;3.6) or Throttle-Valve (4.1;6.1;7.8); open load	N	
1224	51	6	Actuator EGR-Valve (2.9;3.6) or Throttle-Valve (6.1,7.8); over current	N	
1226	51	3	EGR-Valve (2.9;3.6) or Throttle-Valve (4.1;6.1;7.8); short circuit to battery	N	
1227	51	3	EGR-Valve (2.9;3.6) or Throttle-Valve (4.1;6.1;7.8); short circuit to battery	N	
1228	51	4	EGR-Valve (2.9;3.6) or Throttle-Valve (4.1;6.1;7.8); short circuit to ground	N	
1229	51	4	EGR-Valve (2.9;3.6) or Throttle-Valve (4.1;6.1;7.8); short circuit to ground	N	
1230	51	6	Actuator error EGR-Valve (2.9;3.6) or Throttle-Valve (4.1;6.1;7.8); Overload by short-circuit	N	
1231	51	11	Power stage over temperature due to high current.	N	
1232	51	4	Actuator EGR valve (2.9;3.6) or throttle valve (4.1;6.1;7.8); Voltage below threshold.	N	
1241	523986	4	UB6; Short circuit to ground actuator relay 6	N	√
1423	51	0	Warning threshold for an internal actuator error exceeded, < 4L EGR.actuator and >4L Air Intake Flap	N	
1424	51	1	Shut off threshold for an internal actuator error exceeded, <4L EGR.actuator and >4L Air Intake Flap	N	
1533	524074	9	NOx sensor downstream SCR-CAT, sensor internally open load	N	√
1534	524075	11	NOx sensor downstream SCR-CAT, sensor internally short circuit	N	√
1535	524076	9	NOx sensor upstream SCR-CAT, sensor internally open line	N	√
1536	524077	11	NOx sensor upstream SCR-CAT, sensor internally short circuit	N	√
1537	524078	9	NOx sensor downstream SCR-CAT, lambda value above upper physical threshold	N	√
1539	524080	9	NOx sensor upstream SCR-CAT, lambda value above upper physical threshold	N	√
1566	524065	1	Pressure sensor upstream SCR-CAT, pressure below lower physical threshold	N	√
1569	524065	3	Pressure sensor upstream SCR-CAT; short circuit battery or open load	P, N	√
1570	524065	4	Pressure sensor upstream SCR-CAT; short circuit ground	P, N	√

KWP-Code	SPN	FMI	Error details	PCD or NCD Error	Limited engine (Induce-ment)
1582	524067	1	DEF supply module, heater temperature below lower physical threshold	N	√
1586	524067	1	DEF supply module, temperature below lower physical threshold	N	√
1598	524065	2	Pressure sensor upstream SCR-CAT, plausibility error	P, N	√
1752	2791	7	EGR actuator, actuator blocked	N	√
1753	2791	2	EGR actuator, CAN error	N	√
1755	2791	12	EGR Actuator, internal electrical fault	N	√
1757	2791	6	EGR actuator current is above maximum threshold	N	√
1758	2791	3	EGR actuator supply voltage is above the maximum threshold	N	√
1759	2791	4	EGR actuator supply voltage is below minimum threshold.	N	√
1761	2791	7	EGR actuator, broken spring detected.	N	√
1858	524147	7	SCR-System, reverting valve blocked	N	√
1859	524175	0	SCR-CAT, NOx emissions above maximum threshold	N	√
1864	524178	7	SCR System, DEF pressure out of range	N	√
1866	4334	2	DEF supply module pressure, plausibility error	N	√
1867	524067	2	Supply module heater temperature, plausibility error	N	√
1868	524067	2	Supply module temperature, plausibility error	N	√
1874	524152	2	Urea Quality Sensor; Timeout CAN message	N	√
1875	524153	2	Urea tank level & urea tank temperature via CAN bus, timeout of CAN message	N	√
1895	3519	12	DEF tank temperature, temperature too high	N	√
1896	3520	3	DEF quality sensor, short circuit to battery or open load	N	√
1897	3520	4	DEF quality sensor, short circuit to ground	N	√
1898	3519	3	DEF quality sensor, internal temperature sensor short circuit to battery or open load	N	√
1899	3519	4	DEF quality sensor, internal temperature sensor short circuit to ground	N	√
1904	3520	2	DEF quality sensor, bad DEF quality detected or no DEF measuring possible.	N	√
1905	3520	8	DEF quality sensor, measurement conditions not fulfilled	N	√

KWP-Code	SPN	FMI	Error details	PCD or NCD Error	Limited engine (Induce-ment)
1908	3519	13	Temperature at UQS invalid	N	√
1909	4365	12	Urea Tank Temperature is above the warning threshold	N	√
1910	3532	13	DEF quality sensor, tank level; DEF level out of physical range	N	√
1911	3532	3	The DEF Level at UQS out of max. physical range	N	√
1912	3532	4	Quality at UQS out of min. physical range	N	√
1913	4365	13	DEF quality sensor, tank temperature; Temperature out of physical range	N	√
1914	4365	3	DEF quality sensor, tank temperature; Short circuit to battery or open load	N	√
1915	4365	4	DEF quality sensor, tank temperature; Short circuit to ground	N	√
2011	4171	2	Dynamic temperature check of temp before SCR	P, N	√
2013	524147	13	Set together with DFC_SCRCoBldUpLoPres. DFC_SCRCoBldUpLoPresRst is only used for inducement purposes. It ensures that legal inducement is working correctly.	N	√
2014	3520	1	Bad DEF quality	N	√
2032	411	2	Insufficient change in EGR venturi signal.	N	√

NOX CONTROL DIAGNOSTIC SYSTEM (NCD)

The NCD system warns the operator of any error detected by flashing the warning lamp and displaying an engine error code. The engine output is limited depending on the type of fault.

PARTICULATE CONTROL DIAGNOSTIC SYSTEM (PCD)

The PCD system warns the operator of any error detected in the particulate after-treatment system such as the DPF, by using the warning lamp and displaying an engine error code.

LIMITING THE ENGINE OUTPUT

If the exhaust gas control system detects an error, the engine output is limited depending on the type of fault.
Note: If the time interval between the fault repairing and error detecting is short, the regular operation may be executed with a shorter pre operation.

Pre operation: If an error is detected, the engine torque becomes limited.
Regular operation: If the pre operation continues, the regular operation is activated to forcibly set the engine speed to low idle. The regular operation continues until the error is resolved.

SPECIFICATIONS



BASIC SPECIFICATIONS

Type				<Applicable machine models 514600636 or later>	<Applicable machine models 514700252 or later>
MASS					
Operating mass	kg (lb)	Rubber crawlers		15095 (33280)	
		Steel crawlers		15165 (33435)	
PERFORMANCE					
Bucket capacity (Standard bucket)	m^3 (cu. ft.)	Heaped		0.45 (15.89)	
		Struck		0.34 (12.01)	
Slew speed	min^{-1} (rpm)			10.8 (10.8)	
Travel speed	km/h (mph)	Rubber crawlers	1st	3.1 (1.93)	
			2nd	5.5 (3.42)	
		Steel crawlers	1st	—	
			2nd	—	
Gradeability	(degrees)			35	
Ground pressure	kPa (psi)	Rubber crawlers		47.1 (6.83)	
		Steel crawlers		47.7 (6.92)	
Noise level dB (A)		Sound power level		L_{WA} 98	
		Emission sound pressure level at the operator's position (ISO 6396,2008:)		L_{pA} 75	
ENGINE					
Manufacturer and model				DEUTZ TCD3.6L4	
Rated output	Net (ISO 14396)	kW/min^{-1} (hp/rpm)		85/2000 (113.9/2000)	
Displacement		ml (cu.in.)		3621 (221)	
Amount of CO_2 emission**		g/kWh		742.9*	
Starter		V-kW		24-4.0	
Alternator		V-kW		28-2.24	
Battery (IEC 60095-1)		V-A·h		12-90 X 2	
CCA		A		795	

*: Applicable machine models 514700393 or later

**: The amount of CO_2 emission refers to the value obtained by testing the parent engine representing the engine type (engine family member) being used; it shall not guarantee the performance of the machine.

MEMO

MACHINE DIMENSIONS

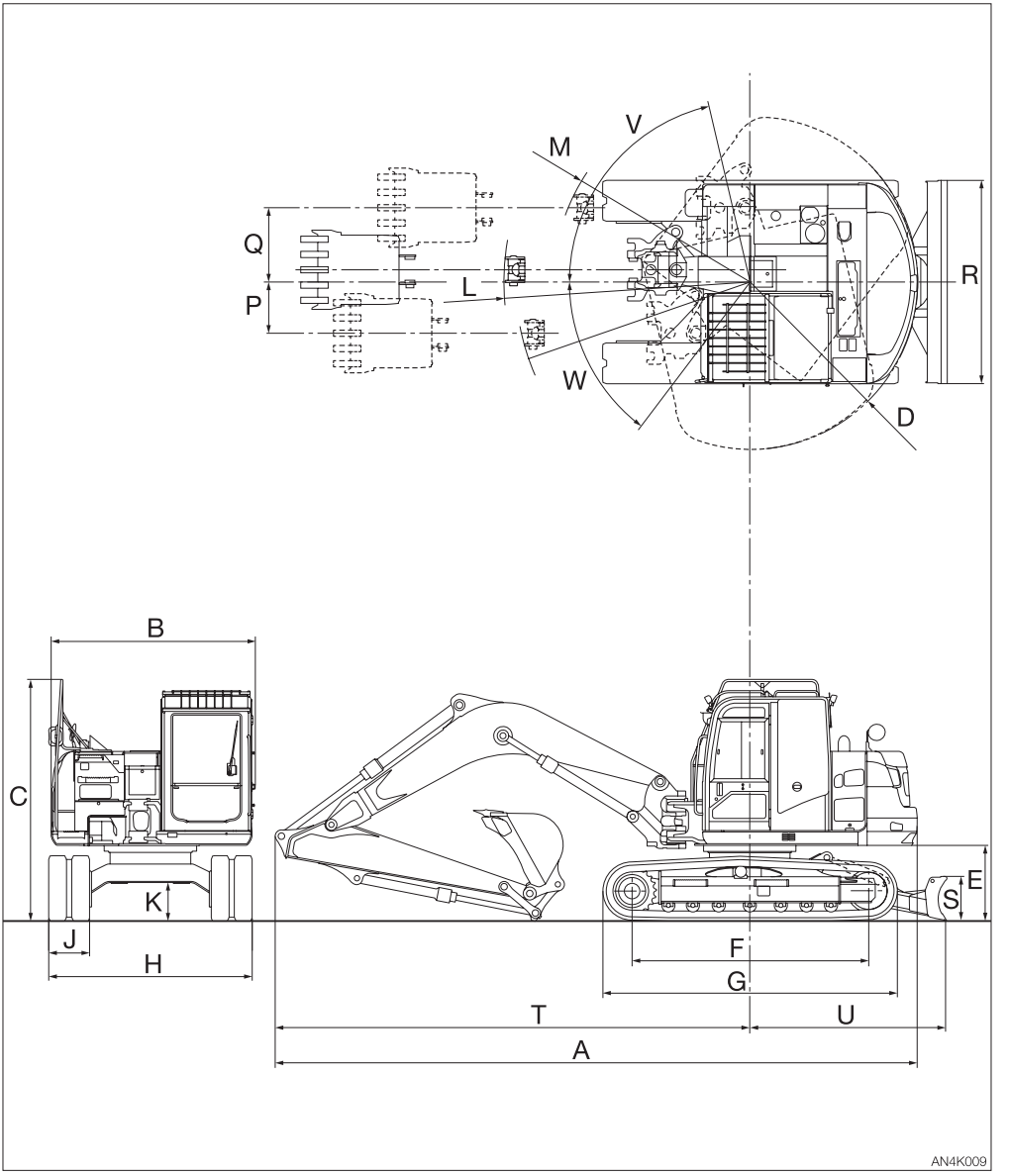

MACHINE DIMENSIONS

Unit: mm (inch)

	Item	Middle arm		Long arm	
		Rubber crawlers	Steel crawlers	Rubber crawlers	Steel crawlers
A	Overall length	7770 (305.9) 7820 (307.9)*	7775 (306.1) 7825 (308.1)*	7805 (307.3) 7855 (309.3)*	7810 (307.5) 7860 (309.4)*
B	Upperstructure overall width	2500 (98.4)	←	←	←
C	Overall height	2960 (116.5)	2950 (116.1)	2960 (116.5)	2950 (116.1)
D	Slew radius	2000 (78.7) 2050 (80.7)*	←	←	←
E	Clearance height under upperstructure	930 (36.6)	900 (35.4)	930 (36.6)	900 (35.4)
F	Crawler base	2895 (114)	2875 (113.2)	2895 (114)	2875 (113.2)
G	Crawler overall length	3615 (142.3)	3580 (140.9)	3615 (142.3)	3580 (140.9)
H	Crawler overall width	2490 (98)	←	←	←
J	Crawler shoe width	500 (19.7)	←	←	←
K	Ground clearance of undercarriage	475 (18.7)	445 (17.5)	475 (18.7)	445 (17.5)
L	Minimum radius of equipment and attachment	2965 (116.7)	←	3015 (118.7)	←
M	Minimum radius of equipment at maximum front offset	2360 (92.9)	←	2405 (94.7)	←
P	Offset distance of bucket (right swing)	630 (24.8)	←	←	←
Q	Offset distance of bucket (left swing)	910 (35.8)	←	←	←
R	Dozer blade width	2490 (98)	←	←	←
S	Dozer blade height	550 (21.7)	←	←	←
T	Front distance to axis of rotation	5770 (227.2)	5775 (227.4)	5805 (228.5)	5810 (228.7)
U	Dozer blade distance to axis of rotation	2395 (94.3)	←	←	←
V	Boom swing angle (Left)	77	←	←	←
W	Boom swing angle (Right)	53	←	←	←

*: Extra weight

OPERATING RANGES

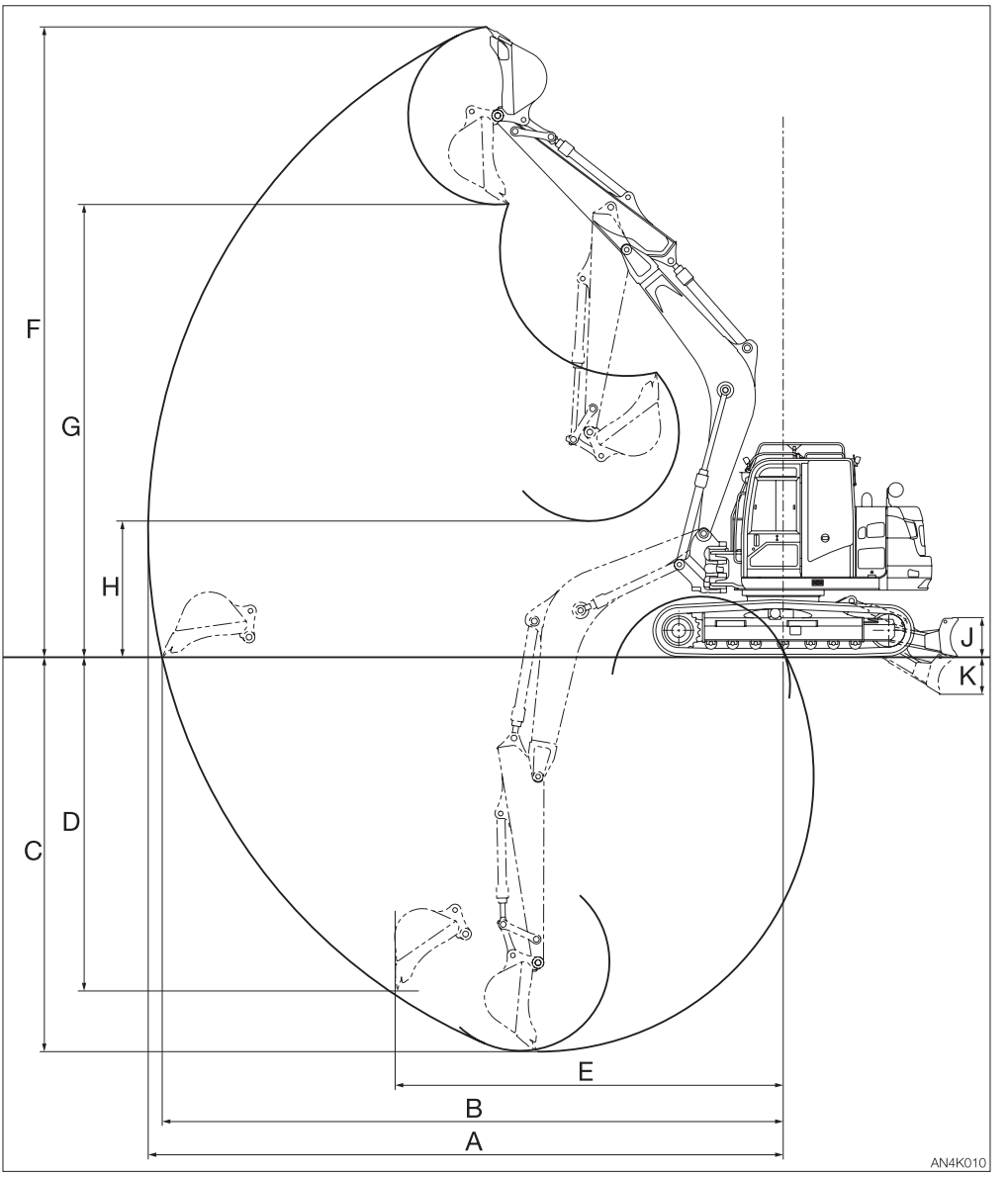

Unit: mm (inch)

	Item	Middle arm		Long arm	
		Rubber crawlers	Steel crawlers	Rubber crawlers	Steel crawlers
A	Maximum reach	8520 (335.4)	←	8760 (344.9)	←
B	Maximum reach at ground reference plane	8320 (327.6)	←	8565 (337.2)	←
C	Maximum digging depth	5195 (204.5)	5225 (205.7)	5445 (214.4)	5475 (215.6)
D	Maximum vertical digging depth	4365 (171.9)	4395 (173)	4605 (181.3)	4635 (182.5)
E	Reach at maximum vertical digging depth	5295 (208.5)	←	5350 (210.6)	←
F	Maximum height of cutting edge	8520 (335.4)	8490 (334.3)	8700 (342.5)	8670 (341.3)
G	Maximum dumping height	6070 (239)	6040 (237.8)	6250 (246.1)	6220 (244.9)
H	Minimum dumping height	2125 (83.7)	2095 (82.5)	1880 (74)	1850 (72.8)
J	Dozer blade maximum lifting	540 (21.3)	510 (20.1)	540 (21.3)	510 (20.1)
K	Dozer blade maximum lowering	515 (20.3)	545 (21.5)	515 (20.3)	545 (21.5)

LIFTING CAPACITIES

When an excavator is used to lift loads in Europe, it must comply with EN 474-1. Install the following devices, and then turn on the overload warning switch before starting the lifting operation:

- Lifting device
- Lifting safety device

The lifting safety device must include two emergency shut-off valves, one for the boom and the other for the arm.
If the blade is used as an outrigger when lifting loads, the blade cylinder must be equipped with an emergency shut-off valve. Refer to “Lifting safety device” on page 2-107.

Rated lift capacity chart

- The loads in the charts do not exceed 87% of hydraulic lift capacity or 75% of tipping load.
- Figures marked with an asterisk (*, ※) are hydraulically-limited capacities.
- The bucket mass is excluded.
- The mass of slings and any other lifting devices shall be deducted from the rated load to determine the net load that may be lifted.
- The load point is the bucket hinge pin.
- The bucket cylinder is fully extended.
- Unit: kg (lbs)

Lifting device (If equipped)

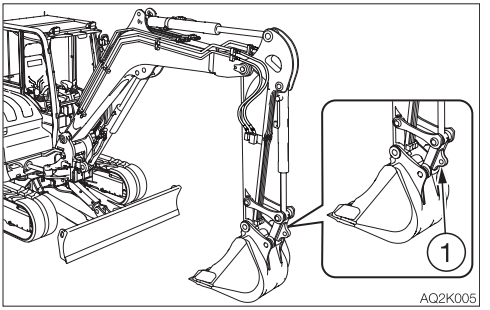

When lifting loads, install the sling on the lifting device (1).

Load hooking system

A load hooking system must be provided with the following capabilities.

1. A system which can withstand two-and-a-half times the rated lift capacity no matter at what position the load is applied.
2. A system that poses no risk of the lifted load falling from the hooking device. For example, equipped with a hook slippage prevention device.
3. A system that poses no risk of the hooking system slipping from the hoe attachment.

Inspection before lifting loads

Before lifting loads, inspect the following items to ensure there is no abnormality:

- Inspect for any damage to the attachment, hose or lifting device.
- Confirm that the overload warning device operates.
  Turn on the overload warning switch, and then fully raise the boom. If the horn is sounded, the overload warning device is normal.

⚠ WARNING

- **Do not attempt to lift or hold any load that is greater than these rated values at their specified load radii and height.**
- **The rated lift capacities are based on the machine being level and situated on a firm supporting surface. For safe lifting, the operator is expected to make due allowance for the particular job conditions such as soft or uneven ground, non-level condition, load to the machine sides, hazardous conditions, experience of personnel, etc. The operator and other personnel should fully acquaint themselves with the operator's manual furnished by the manufacturer before operating this machine. When operating the machine, the safety rules of the equipment must also be followed.**
- **Do not travel while lifting a load; It is very dangerous.**
- **Do not lift loads when the boom is being swung to the right or left. Doing so could cause the machine to tip over.**

Middle arm

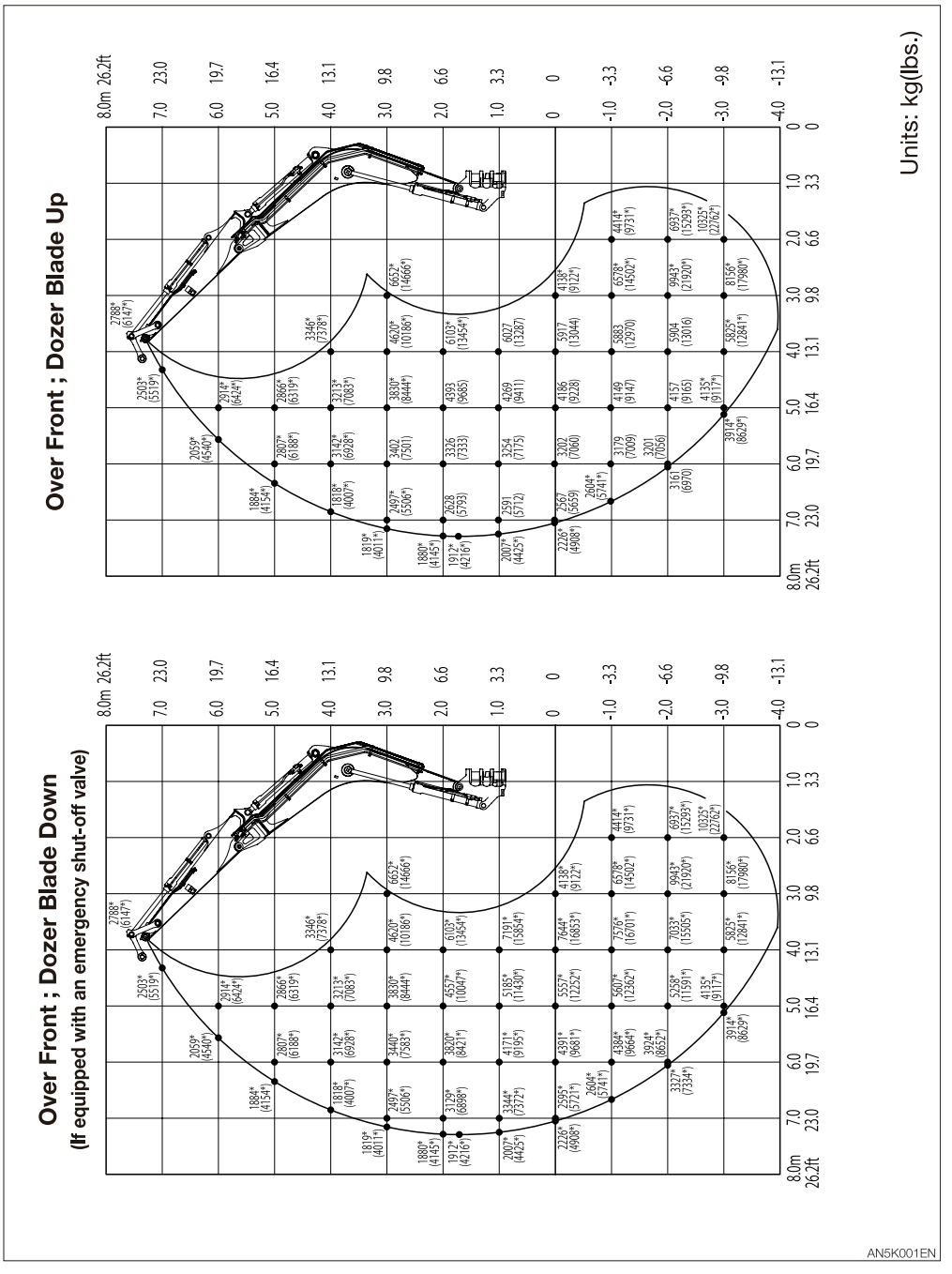
Over Front ; Dozer Blade Up
Over Front ; Dozer Blade Down
(If equipped with an emergency shut-off valve)
Units: kg(lbs.)
AN5K001EN

Middle arm

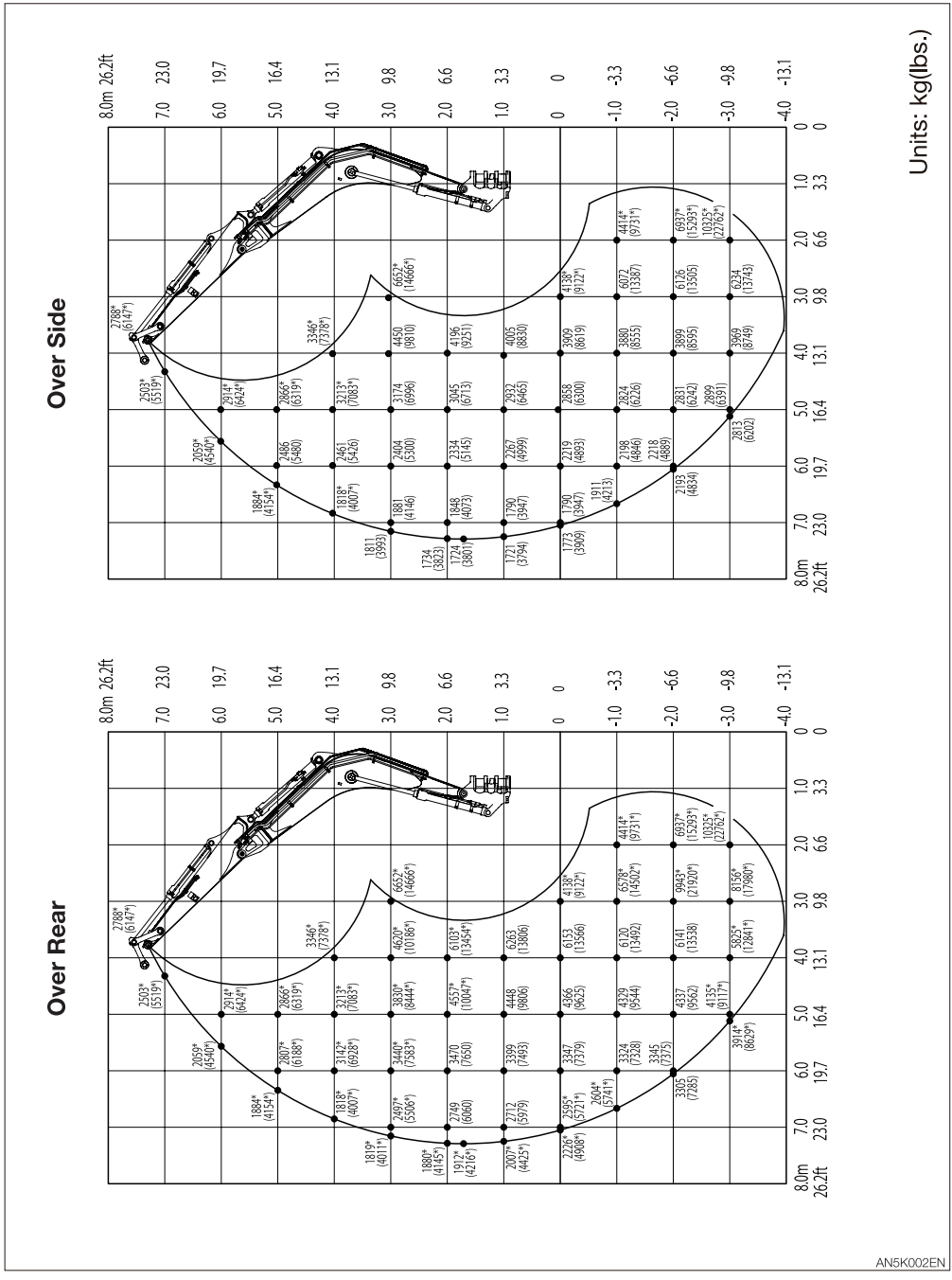

Middle arm (Equipped with Extra weight)

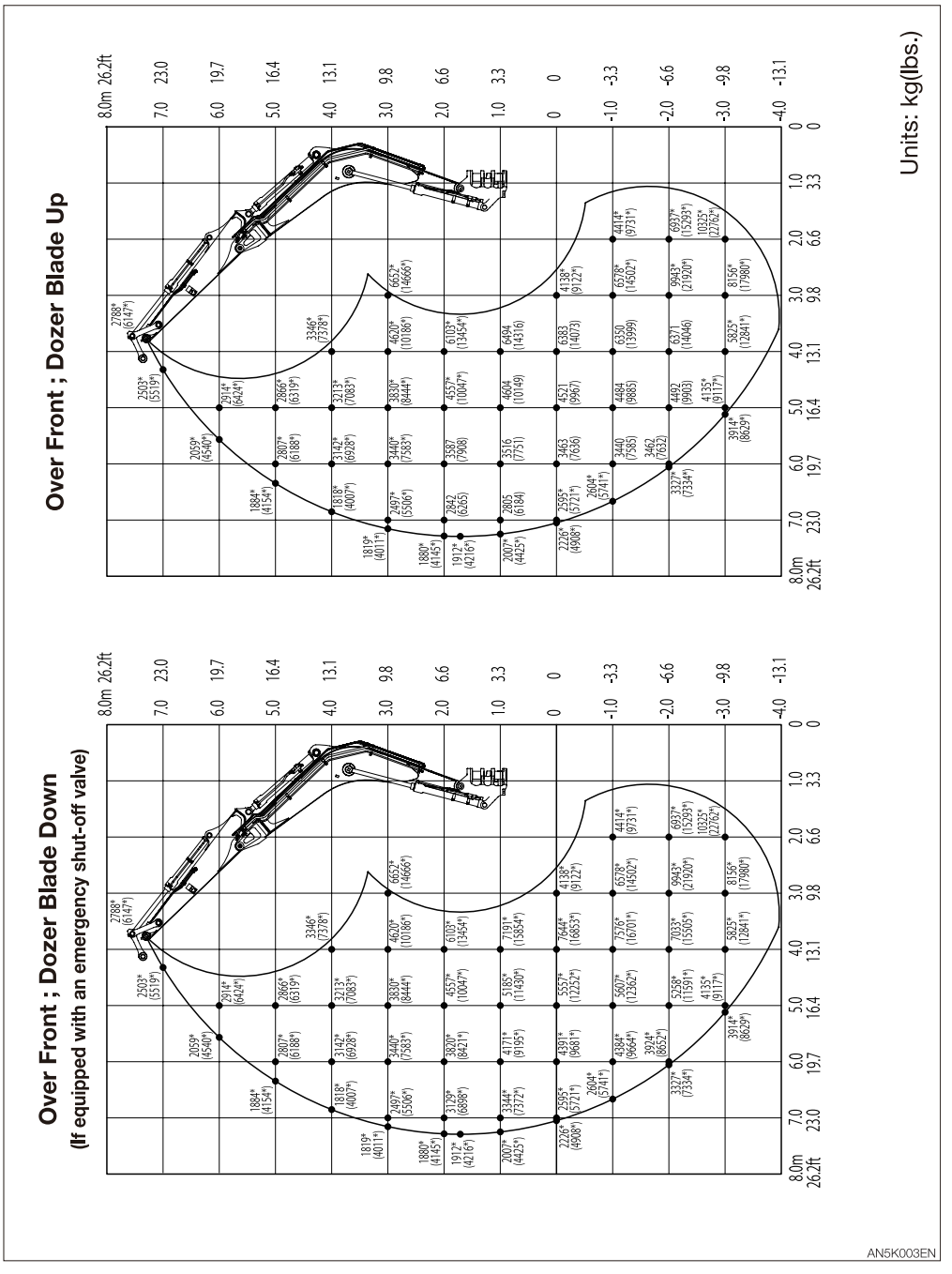

Middle arm (Equipped with Extra weight)

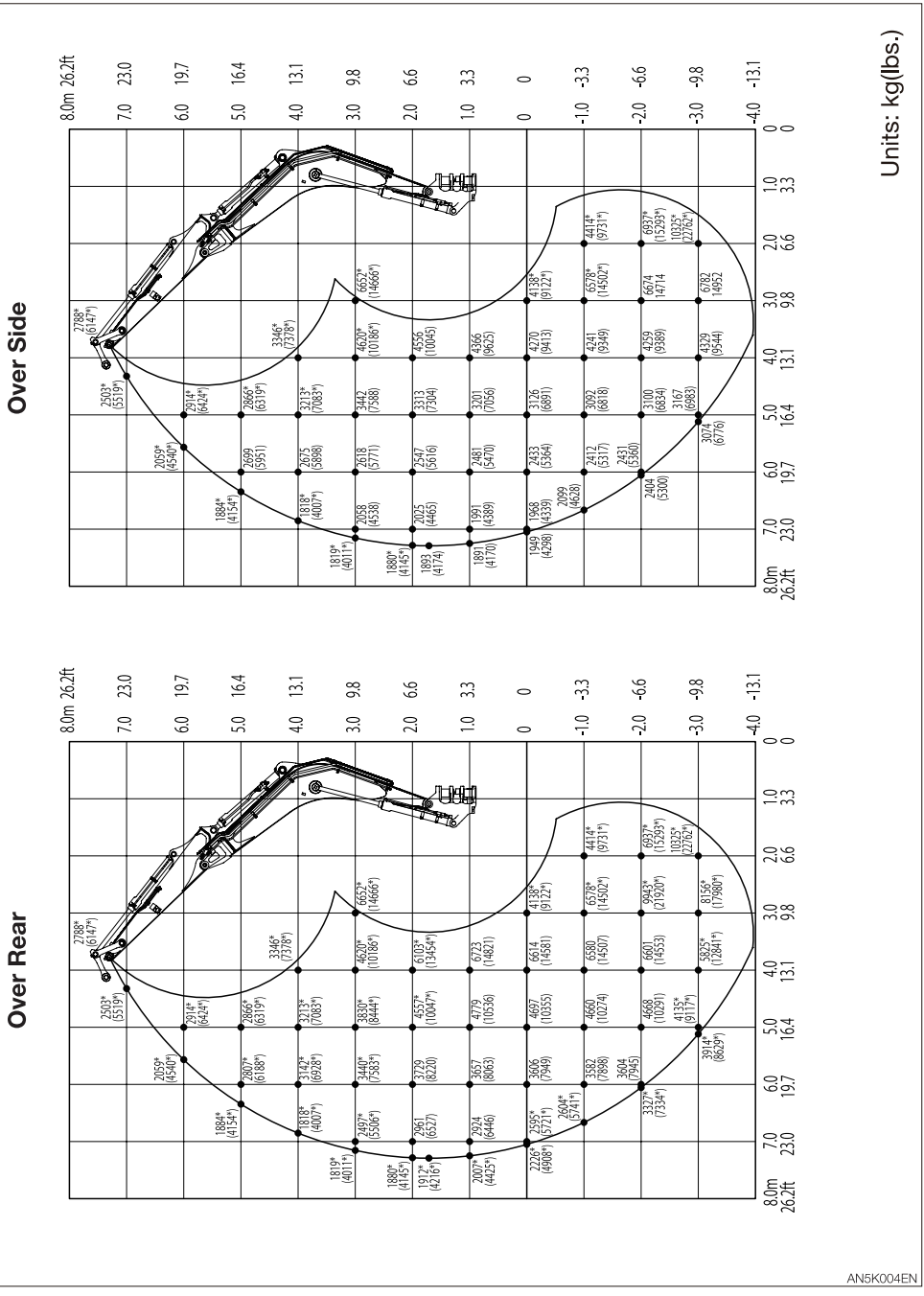

Long arm

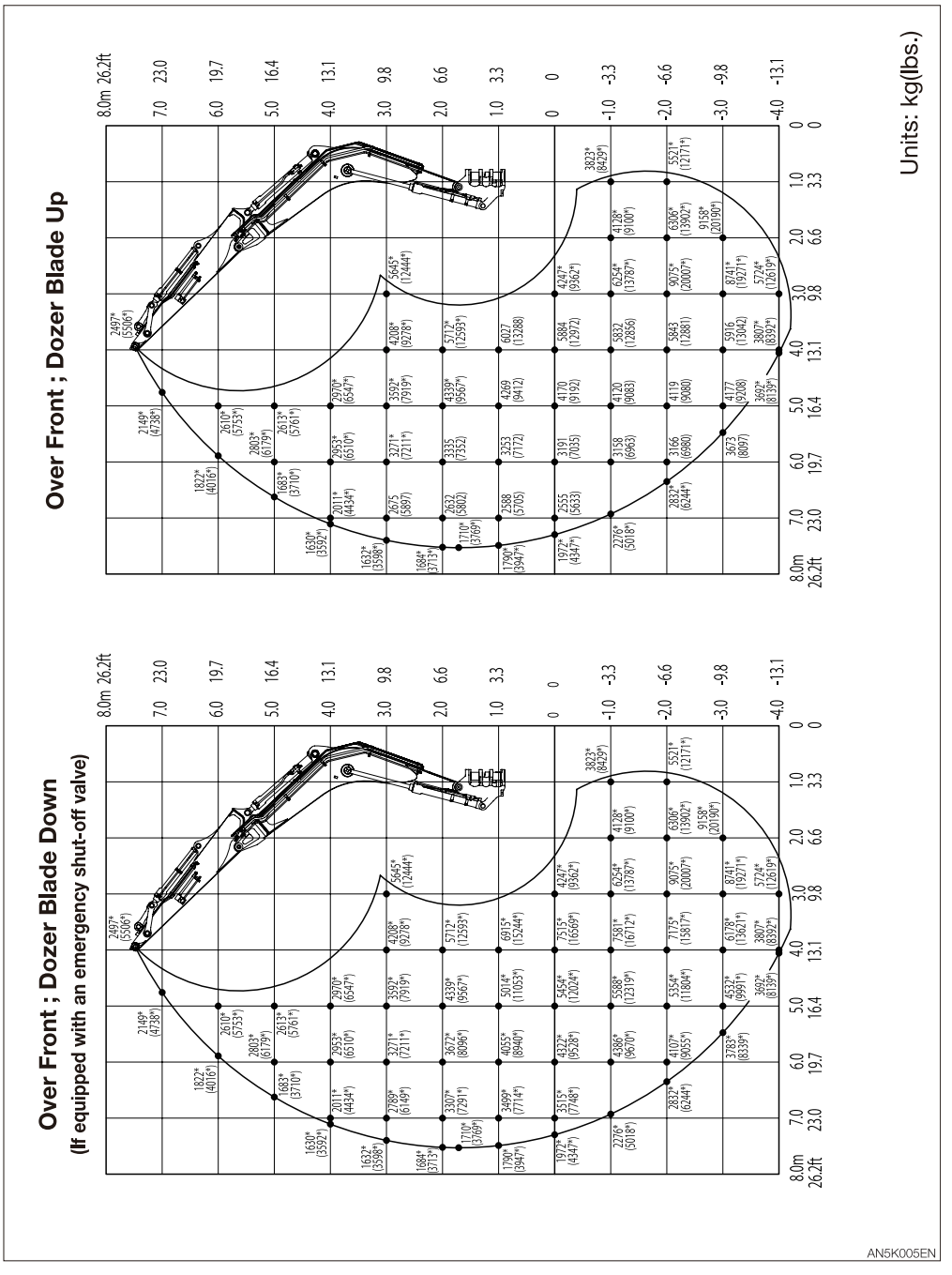
Over Front ; Dozer Blade Up
Over Front ; Dozer Blade Down
(If equipped with an emergency shut-off valve)
Units: kg(lbs.)
AN5K005EN

Long arm

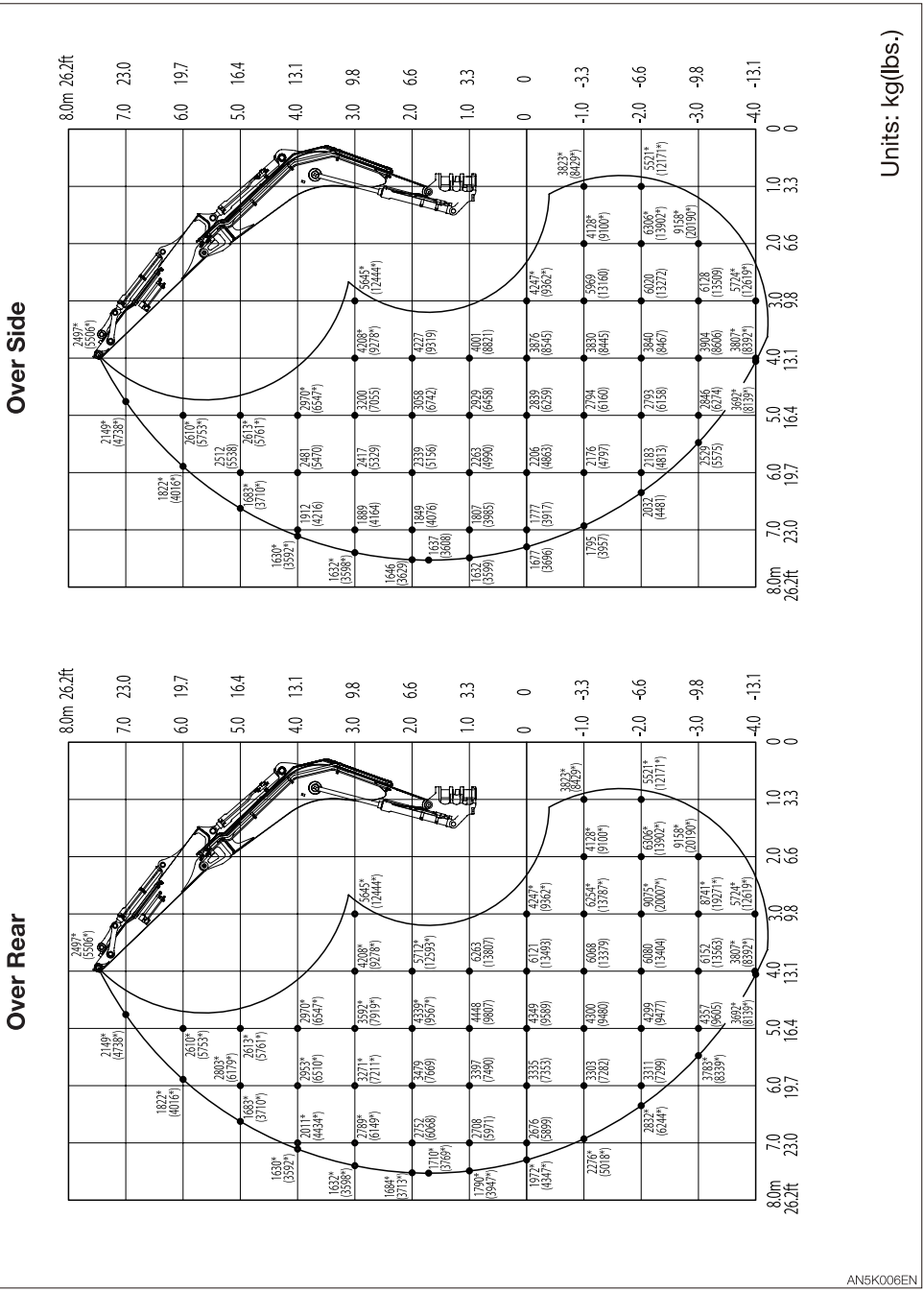

Long arm (Equipped with Extra weight)

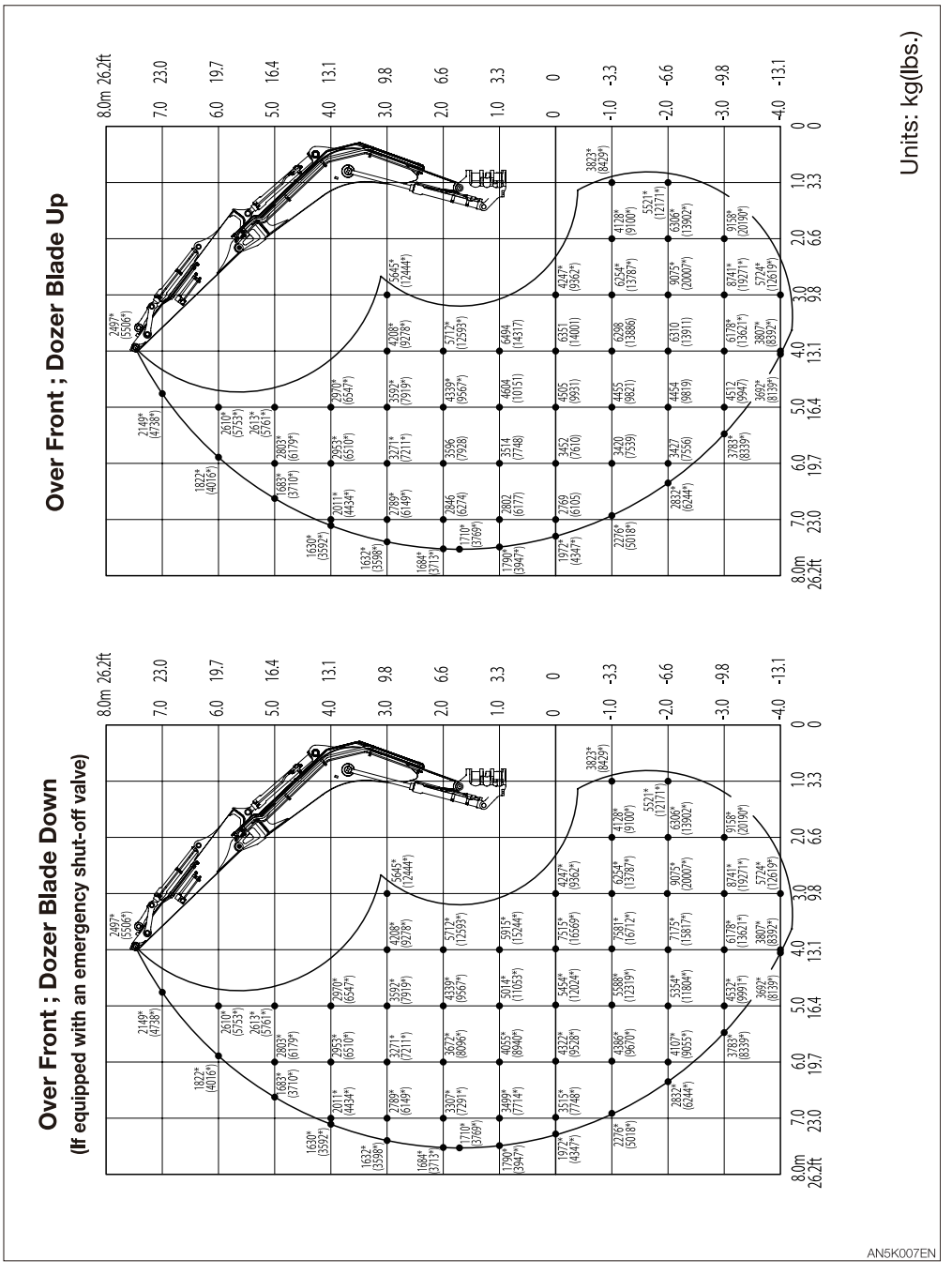

Long arm (Equipped with Extra weight)

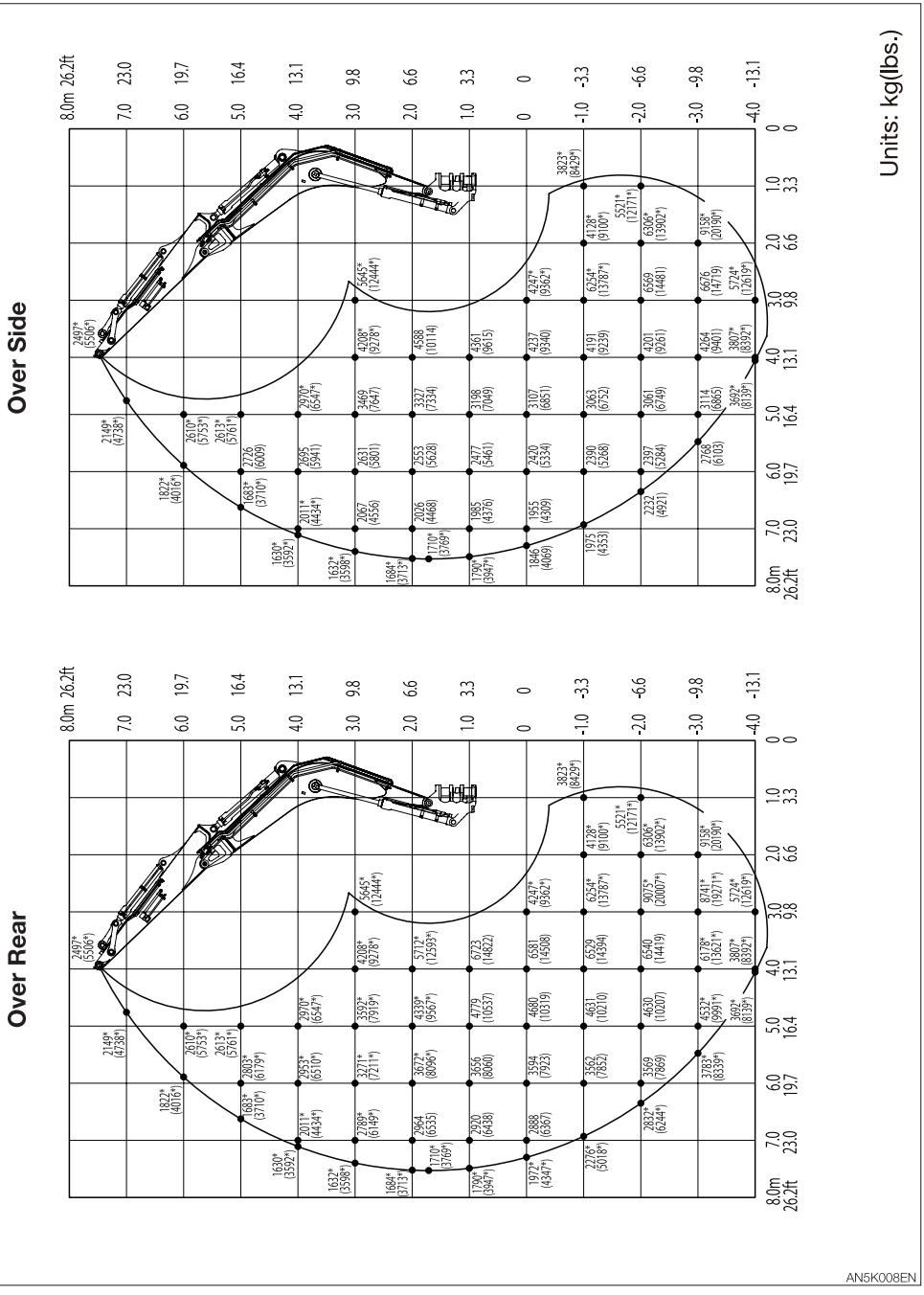

OPTIONS

GENERAL PRECAUTIONS

SAFETY PRECAUTIONS

⚠ WARNING

When removing or installing an attachment or optional part, take the following precautions.

- **Consult with Takeuchi before installing an optional attachment.**
- **Do not use any attachments not approved by Takeuchi. Doing so may cause safety problems. Or, it may adversely affect the machine's operation or service life.**
- **We will not be held responsible for any injuries, accidents or damage to its products caused by the use by a non-approved attachment.**
- **Select a firm, level work area. Also, be sure to park in a well ventilated place.**
- **Clear obstacles and dangerous objects, and clean up spilled fuel immediately.**
- **When lifting, be sure to designate a person to act as a signalman. Follow the instructions of the signalman regarding the procedure and measures.**
- **When it is necessary to temporally place a heavy object or an attachment on the ground during removal or installation, be sure to place it in a stable position.**
- **Keep everyone out of the area when lifting. There is a hazard of objects falling or contacting with people in the area.**
- **Use a crane to move heavy objects (25 kg (55 lb.) or greater).**
- **Before removing a heavy object, be sure to put a support to it. When lifting with a crane, pay attention to the center of gravity of the load to keep the machine in balance.**
- **Do not operate the machine while the load is lifted by a crane stand.**
- **Use the proper procedure when mounting a boom or arm; otherwise serious damage could result. Consult your sales or service dealer for help.**

CAUTIONS WHEN INSTALLING ATTACHMENTS

Be sure to perform a test operation after an optional or other special attachment has been replaced. Inspect the hydraulic oil level and recharge it as necessary. Consult your sales or service dealer for detailed procedures on installing/removing attachments.

CAUTIONS WHEN OPERATING ATTACHMENTS

⚠ WARNING

Long attachments reduce stability of the machine. The machine may tip over if it loses the balance when traveling or slewing on slopes.
Never perform the operations listed below as they are extremely dangerous.

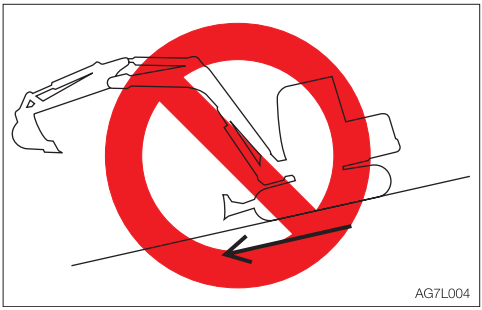

- Traveling down the slopes with the attachment raised



- Traveling across slopes

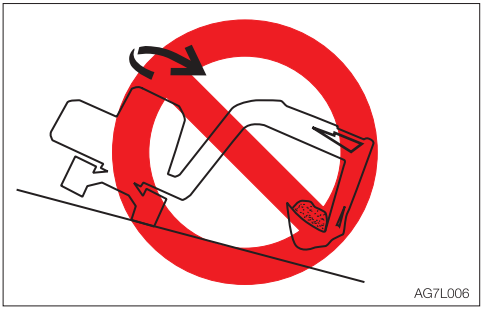

- Slewing on slopes
- If there is a heavy attachment is installed, the machine takes longer distance than usual to come to a complete stop when the stopping operation is performed. Carefully judge the distance so as not to bump into an object around the machine. Keep a safe distance from surrounding obstacles. When a heavy attachment is installed, natural drop (the gradual dropping of the attachment under its own weight when it is stopped in midair) increases.
- The machine can tip over more easily in the lateral direction than in the longitudinal direction.
  - Do not slew sideways with a heavy load at the how attachment. In particular, do not slew sideways on slopes.
  - The attachment is heavier for machines equipped with breakers or crushers than for machines equipped with the standard bucket. Do not operate such machines sideways, especially digging downhill.
- When a long arm is installed, the operating range increases. Carefully judge the distance so as not to bump into an object around the machine. Keep a safe distance from surrounding obstacles.

ATTACHMENT COMBINATION TABLE

The table below shows which bucket should be installed when the machine is using a standard arm, middle arm or long arm. Select a proper bucket by following the table.

⚠ WARNING

- **Consult with Takeuchi before installing an optional attachment.**
- **Do not use any attachments not approved by Takeuchi. Doing so may cause safety problems. Or, it may adversely affect the machine's operation or service life.**
- **We will not be held responsible for any injuries, accidents or damage to its products caused by the use by a non-approved attachment.**
- **The swing stopper must be installed when a bucket wider than a 970W (standard) bucket is installed. Failure to do so may result in the bucket hitting the machine body.**

√: Can be used.
Δ: Can be used only for light operations (digging and loading of dry and loose soil or mud)
—: Cannot be used.
Total bucket mass = Bucket mass + Heaped bucket load (specific gravity: 1.8)

Bucket	Rated capacity m^3 (cu.yd.)	Bucket cutting width mm (inch)	Middle arm 2320 mm (91.3 in.)	Long arm 2570 mm (101.2 in.)
970 W (S.T.D.)	0.45 (0.54)	970 (38.2)	√	√
Total bucket mass = Within 1190 kg (2620 lb.)		Within 970 (38.2)	√	√

SELECTING A LEVER PATTERN

The operating pattern of the left and right operating levers can be changed.

⚠ WARNING

Before starting the engine, check the selector to see which operating pattern the left and right operating levers are set.

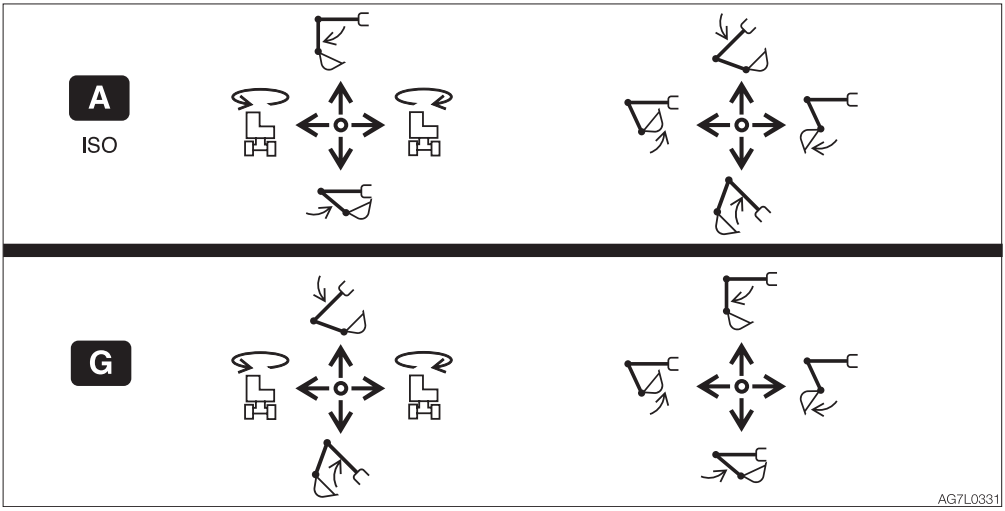

SWITCHING THE LEVER PATTERN

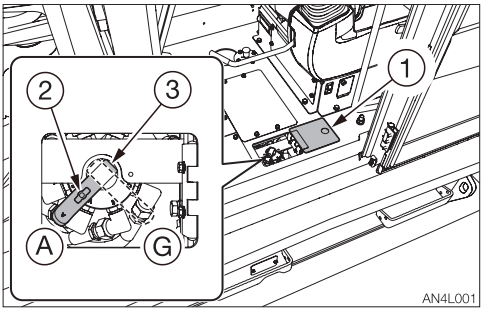

(A) : ISO pattern
(G) : G pattern

1. Park the machine on a flat and rigid ground, and stop the engine.
2. Fully open the cab door and fix it in place.
3. Remove the floor mat.
4. Open the cover (1).
5. Loosen the wing bolt (2).
6. Turn the selector valve lever (3) to change the pattern.
7. Tighten the wing bolt (2) and fasten the lever (3) in place.
8. Close the cover (1) and return the floor mat back in place.
9. Confirm the lever pattern.

HYDRAULIC BREAKER

For handling of the breaker, read the hydraulic breaker's manual, provided separately.

IMPORTANT: When installing an attachment, make sure that it is appropriate for the machine being used. Contact your sales or service dealer for advice on selecting attachments.

CAUTIONS ON OPERATING

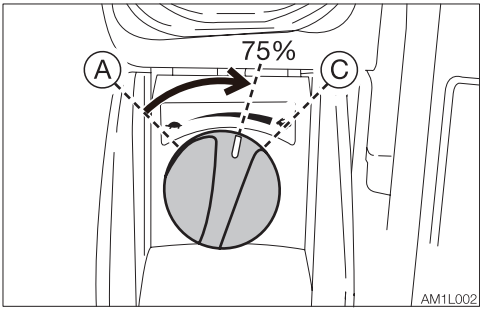

- Start the engine and run it at 75% of the maximum speed.

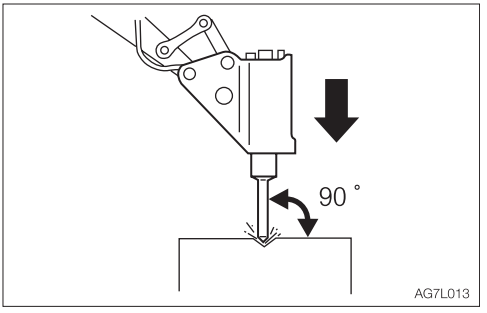

- Pound with the chisel pressed perpendicular to the surface to be pounded.
- When pounding, press the chisel properly against the object to be broken so as to avoid pounding the air.

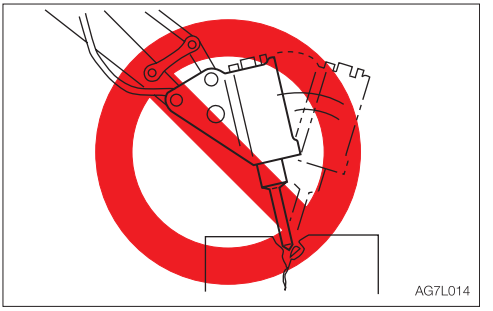

- Do not pry with the chisel or do not pry while pounding.
- Do not move the chisel while pounding.
- Do not pound continuously for over 30 seconds on the same surface.

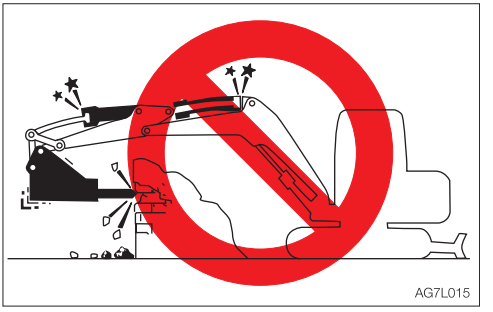

- Do not pound with the cylinder fully extended or retracted (at the stroke end). Leave a margin of at least 50mm (2 in).

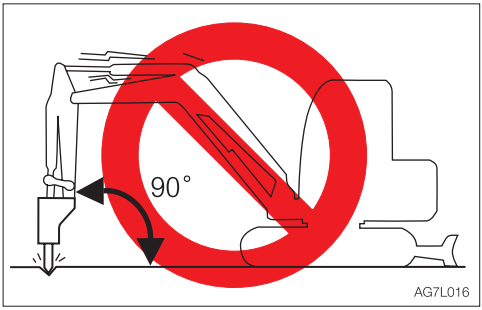

- Do not pound with the arm placed perpendicular to the ground surface.

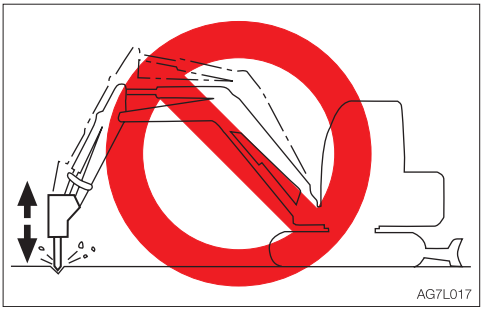

- Do not drop the breaker itself on the object to be broken in order to break it.
- Do not move objects to be broken or rocks with the breaker itself.
- Slew the machine occasionally to cool the engine.
- If a hydraulic hose is vibrating abnormally, nitrogen gas may be leaking from the accumulator. Ask for an inspection early.

REPLACING THE HYDRAULIC OIL REGULARLY

When a hydraulic breaker is used, the oil deteriorates more quickly than that used for a usual operation. Be sure to replace the hydraulic oil and the return filter elements.

- Failure to replace these in time can lead to damage to the machine and the breaker hydraulic system. To improve the service life of the hydraulic systems, be sure to replace the hydraulic oil and return filter element after the number of hours shown on the diagram below.
- When replacing the hydraulic oil, clean the suction strainer.

Replacement interval (hours)

Item	Hydraulic oil	Filter element
1st time	—	25
2nd time	—	100
Periodically	1200 (600)	200

When the breaker operating ratio is 100%.

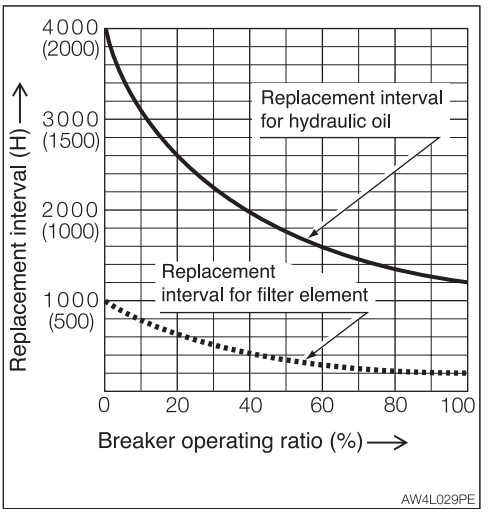

( ): When using conventional antiwear hydraulic oil.

TRAVEL ALARM

The alarm sounds while the machine is traveling and stops when the machine stops traveling.
If the alarm does not sound when the machine travels, the fuse may be blown. Inspect the fuses.

⚠ WARNING

If the fuse blows again soon after replacement, then the electric system is likely faulty. It may pose a fire hazard if not properly repaired. Contact your sales or service dealer for advice.

1. Turn the starter key to the OFF position to stop the engine.

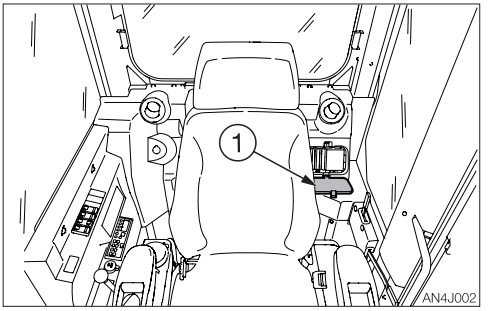

2. Loosen the screw and open the fuse box cover (1).
3. Check for any blown fuses (2).

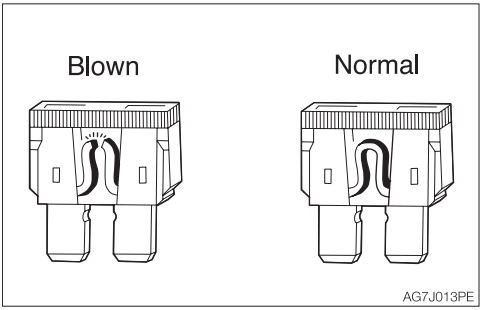

4. If a fuse is blown, replace it with a spare fuse of the same capacity.

Fuse layout and circuits protected

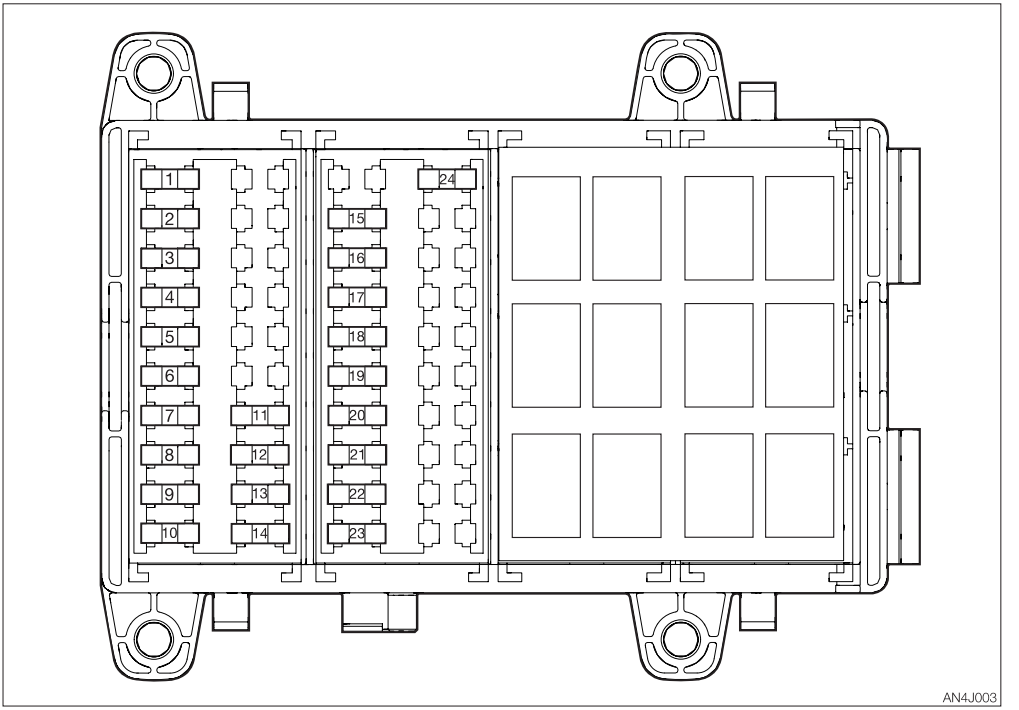

No.	Capacity	Symbol	Protected circuit	Fuse No.
1	25A		Fan switch	F10
2	10A		Air conditioner switch	F9
3	15A	OPT (2)	Option (2)	F8
4	10A	OPT (1)	Option (1)	F7
5	25A	CAB	Cab	F6
6	10A		Display	F5
7	10A		Controller, **travel alarm**	F4
8	20A		Safety lock lever	F3
9	10A		Wiper	F2
10	20A		Lights	F1
11	5A	OPT (12V)	Option (12V)	F14
12	15A		NOx sensor	F13

No.	Capacity	Symbol	Protected circuit	Fuse No.
13	5A		DEF sensor	F12
14	3A		Anti-theft	F11
15	10A		Controller	F29
16	10A		Display	F28
17	3A		Anti-theft	F27
18	25A		Fuel supply pump	F26
19	30A		ECU	F25
20	20A		Feed pump	F24
21	30A		SCR system	F23
22	10A		Starter switch	F22
23	10A		Horn	F21
24	10A	OPT (12V)	Option (12V)	F40

OPTIONAL EQUIPMENT MASS

OPTION	
Air suspension	10 (22)
Segment rubber (including shoe guide)	150 (331)
Steel crawlers of 500-mm width (including shoe guide)	70 (154)
Steel crawlers of 600-mm width (including shoe guide, steps and blade)	280 (617)
Steps for the steel crawlers of 600-mm width	10 (22)
Blade for the steel crawlers of 600-mm width	10 (22)
Steel crawlers of 700-mm width (including shoe guide, steps and blade)	595 (1310)
Steps for the steel crawlers of 700-mm width	20 (44)
Blade for the steel crawlers of 700-mm width	25 (55)
Center guide	25 (55)
Middle arm	40 (88)
Long arm	75 (165)
Emergency shut-off valve (Arm)	10 (22)
Auxiliary 3rd (Middle arm)	15 (33)
Auxiliary 3rd (Long arm)	15 (33)
Auxiliary 3rd + Auxiliary 4th. (Middle arm)	30 (66)
Auxiliary 3rd + Auxiliary 4th. (Long arm)	35 (77)
Float	15 (33)
Extra weight	465 (1025)
Oil supply pump	10 (22)
Auxiliary 1st stopper valve specifically designed	–25 (–55)
Front guard	55 (121)
No bucket	–380 (–838)

Units: kg (lb)

*: Mass of optional equipment is added to the standard machine mass.
*: This table only contains the optional equipment of 10kg (20lb) or more in mass.

BIODEGRADABLE OIL

Biodegradable oil is a new type of hydraulic oil that is decomposed into carbon dioxide and water by microorganisms in the soil and water. It is highly safe for living organisms and offers advantages in term of environmental protection.

- Recommended biodegradable oil: Mobile EAL Envirosyn 46H (an ester synthetic oil) and Panolin HLP Synth 46 (an ester synthetic oil).
  When replacing the mineral oil with biodegradable oil, use either of the above brand oil.
  Note that there are oils of other brands, even among ester synthetic oils, which may damage O-rings, packings and seals.
- When switching from a mineral oil to a biodegradable oil, the parking brake torque decreases by about 30%.

REPLACING THE HYDRAULIC OIL WITH BIODEGRADABLE OIL

- A mixture of mineral oil and biodegradable oil or a mixture of different brands of biodegradable oils will result in a decrease in performance of the hydraulic oil, biodegradability and safety. The inside of the hydraulic oil system must be flushed (cleaned) before replacing. The residual mineral oil in the machine should be about 2% or less, as complying with the ISO 15380.
- This operation is dangerous and requires experience. Ask a Takeuchi sales or service dealer for help.

Flushing

To be performed by a Takeuchi sales or service outlet

1. Drain the hydraulic oil (mineral oil) from the hydraulic oil tank and clean the inside of the tank and suction strainer.
   Refer to “Replacing the hydraulic oil and cleaning the suction strainer”.
2. Remove the cylinder hoses and drain the hydraulic oil (mineral oil) from inside the cylinders.
3. Supply new biodegradable oil to the hydraulic oil tank.
4. Bleed the air from the hydraulic oil system.
5. Operate the hydraulic devices for 30 minutes.
6. Drain the biodegradable oil from the tank and cylinders.
7. Replace the hydraulic oil return filter with a new filter.
8. Repeat steps 3 and 4.
9. Operate the hydraulic devices for 30 minutes.
10. Drain the biodegradable oil from the tank and cylinders.
11. Repeat steps 3 and 4.
12. Operate the hydraulic devices for 1 hour.
13. Drain the biodegradable oil from the tank and cylinders.
14. Replace the return filter with a new filter.
15. Repeat steps 3 and 4.
16. Operate the hydraulic devices, then check for oil leakage.

There is no need to flush the hydraulic oil system when switching from biodegradable to mineral hydraulic oil.

CAB OPTIONS

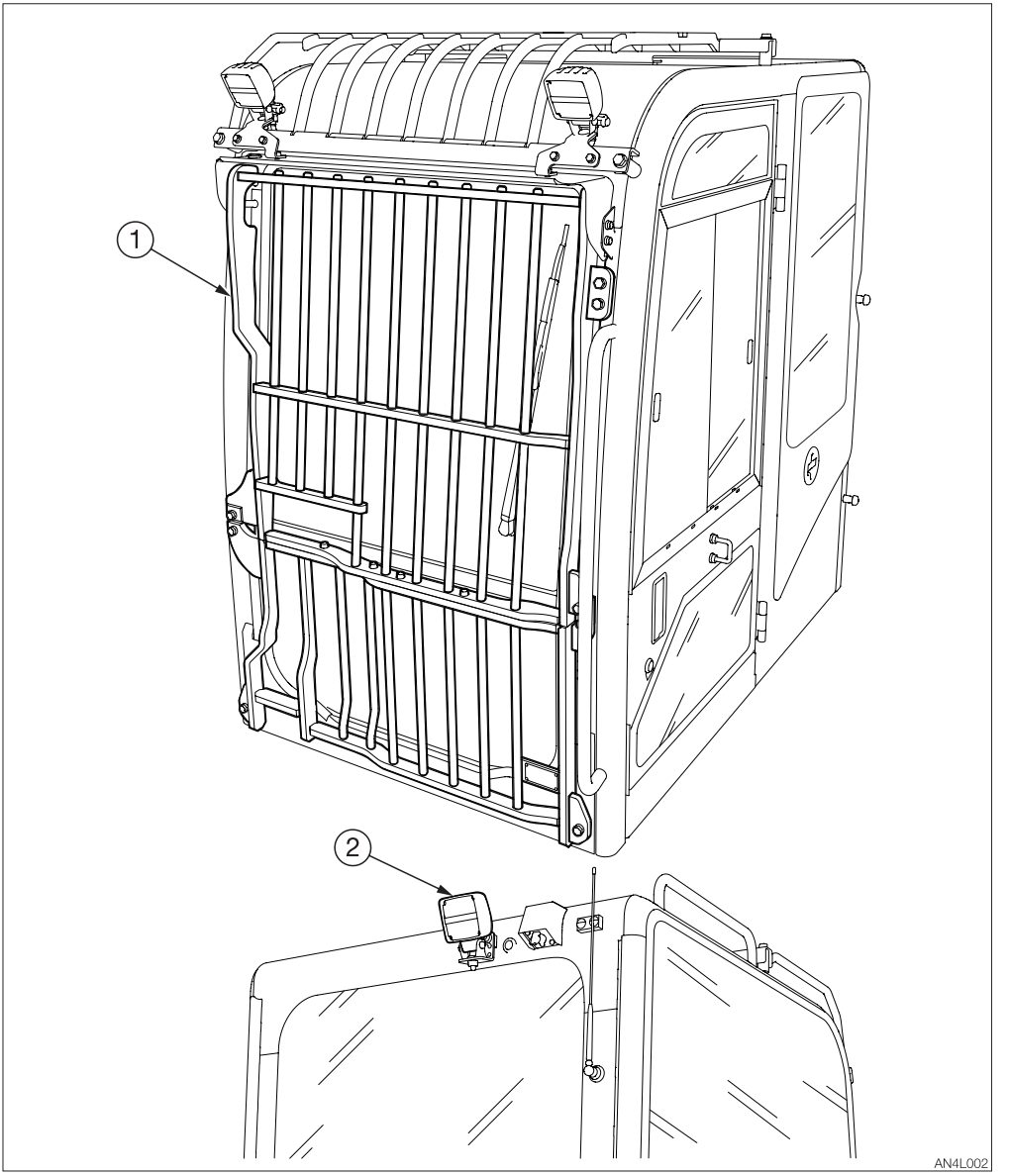

1. Front guard (Level II: ISO 10262)
2. Rear light

OPERATING LEVER SWITCH KIT 1

HORN BUTTON

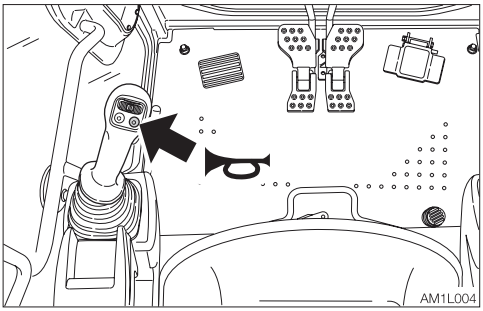

Press the button situated on the left operating lever to blow the horn.

DECELERATION BUTTON

⚠ WARNING

Before operating the deceleration button, set the operating lever to the neutral position and take your foot off the pedals. If the deceleration button is pressed while driving, the machine's operating speed will abruptly change to result in a dangerous situation.

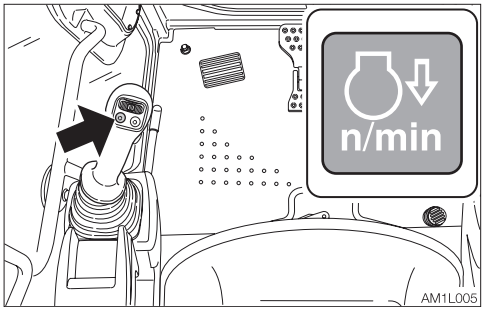

Press this button on the left operating lever to lower the engine speed to low idling. Press the button again to return to the engine speed set with the throttle controller. For safety reasons, it is designed that the deceleration function is activated to set the engine revolutions to low idling whenever the engine is started.
Cancel the deceleration mode by pressing the deceleration button as necessary.
Note: This deceleration button is capable of decreasing the engine speed and reducing the fuel consumption, with a simple operation, in a situation such as when little engine output is required and thus the operating or the travel levers are in neutral.

TRAVEL SPEED BUTTON

⚠ WARNING

When a load greater than a set value is applied during traveling in 2nd (high) speed, the speed will automatically slow down to 1st (low) speed. When the load becomes lighter, the speed will increase and return to 2nd (high) speed. It should be noted that the travel speed changes depending on the load condition (for machines with the automatic travel shift-down system).

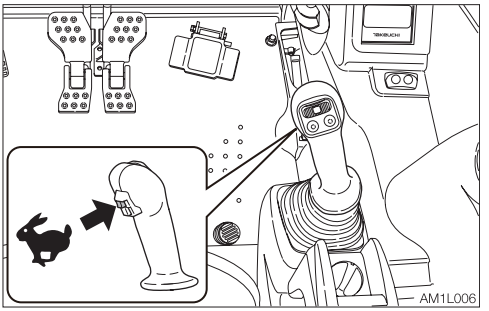

Press this switch to set the travel speed to 2nd (high) speed. Press it again to return to 1st (low) speed.

AUXILIARY 1ST SWITCHES

Auxiliary hydraulic buttons

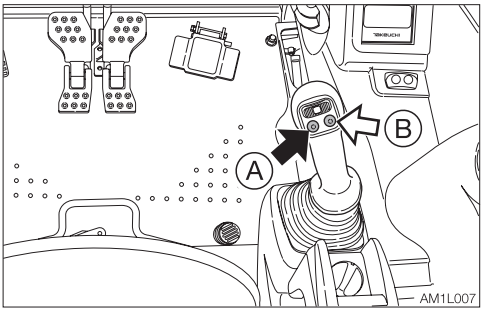

Press those buttons to control the flow of the oil in the first auxiliary hydraulic lines.

- Proportional control of the auxiliary hydraulic circuit is not possible.

(A).....Hydraulic oil flows to the left auxiliary line (a).

(B) .....Hydraulic oil flows to the right auxiliary line (b).

Slider switch (Proportional control)

Proportional control allows for slow-to-fast/ fast-to-slow movement of attachment. Example: If you move the slider switch half way, the attachment will move at approximately one-half the speed.

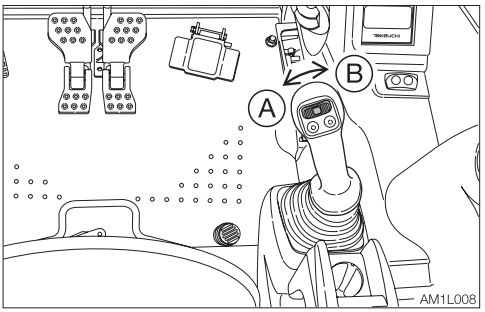

Move this switch to control the flow of the oil in the first auxiliary hydraulic lines.

(A).....Hydraulic oil flows to the left auxiliary line (a).

(B) .....Hydraulic oil flows to the right auxiliary line (b).

Refer to “Auxiliary hydraulic lines” on pages 2-100 to 2-105.

AUXILIARY 2ND/4TH SWITCH

Slider switch
(Proportional control)
Proportional control allows for slow-to-fast/ fast-to-slow movement of attachment.
Example: If you move the slider switch half way, the attachment will move at approximately one-half the speed.

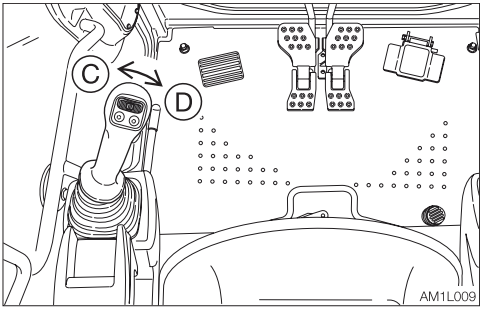

Move this switch to control the flow of the oil in the second auxiliary hydraulic lines.
(C): .....Hydraulic oil flows to the left auxiliary line (c).
(D): .....Hydraulic oil flows to the right auxiliary line (d).

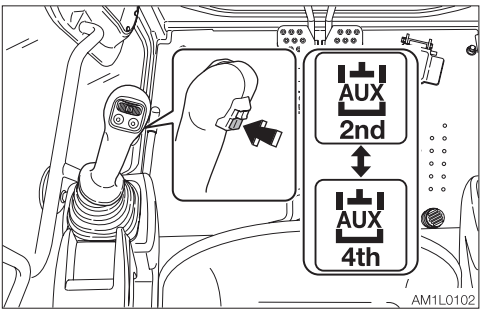

To use the auxiliary 4th hydraulic line, press the auxiliary 2/4 select button to change to the operation of the auxiliary 4th.
Refer to “Auxiliary hydraulic lines” on pages 2-100 to 2-105.

AUXILIARY 2/4 SELECT BUTTON

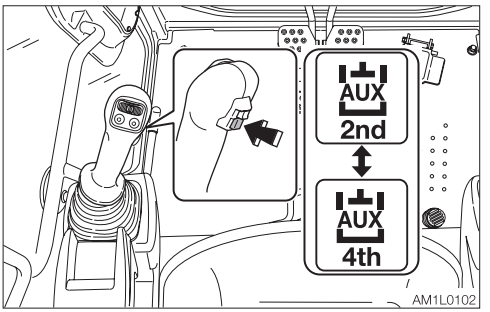

This switch is used to change from the second auxiliary operation to the fourth auxiliary operation.
Pressing this button displays the second auxiliary on the Multi-information display to indicate that the second auxiliary operation is enabled. Pressing this button again displays the auxiliary 4th on the Multi-information display to indicate that the auxiliary 4th operation is enabled.
The actual operation is performed with the auxiliary 2nd/4th switch (slider switch).

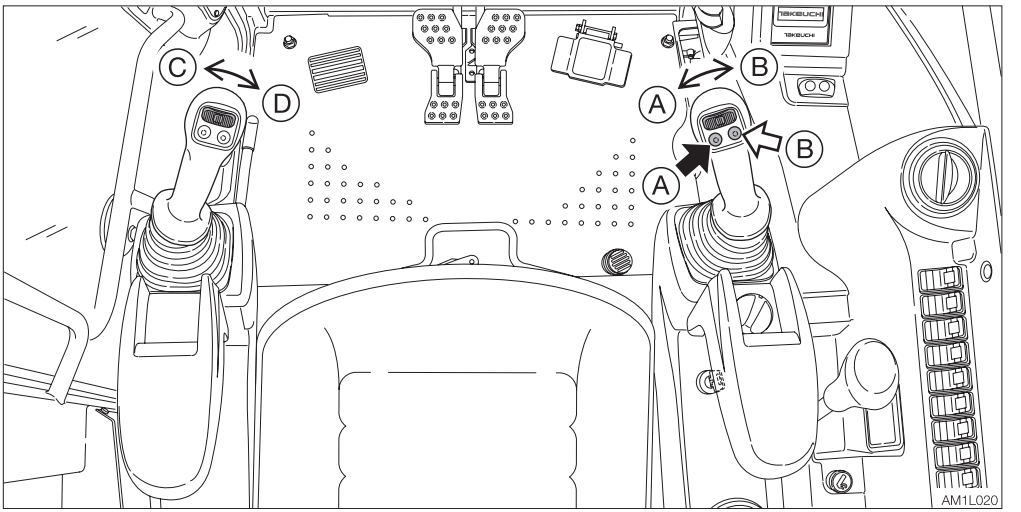

Operating

Press those buttons to control the flow of the oil in the first/second auxiliary hydraulic lines.

(A).....Hydraulic oil flows to left auxiliary line (a).

(B) .....Hydraulic oil flows to right auxiliary line (b).

(C) .....Hydraulic oil flows to left auxiliary line (c).

(D) .....Hydraulic oil flows to right auxiliary line (d).

Refer to “Auxiliary hydraulic lines” on pages 2-100 to 2-105.

Releasing the residual pressure

After the auxiliary hydraulic circuits have been used, pressure remains in the circuits. This is called the residual pressure. Release this residual pressure before disconnecting the lines.

Perform the residual pressure releasing within 10 minutes after the engine stopping.

1. Park the machine on a flat, rigid and safe ground.
2. Stop the engine.
3. Lower the safety lock lever to the unlocked position.
4. Turn the starter switch to the ON position.
5. Press the auxiliary hydraulic switches several times to release the residual pressure in the auxiliary hydraulic circuitry.

MEMO

TAKEUCHI SECURITY SYSTEM

The Takeuchi Security System is a system that allows only registered starter keys to be used for starting the engine.
The engine cannot be started with any unregistered or counterfeit starter keys. If a registered starter key is lost or stolen, you can set the system to delete the registered key information, so that the lost or stolen key cannot be used to start the engine. Although machine theft cannot be completely prevented, the system certainly helps reduce the risk of theft.

STARTER KEY

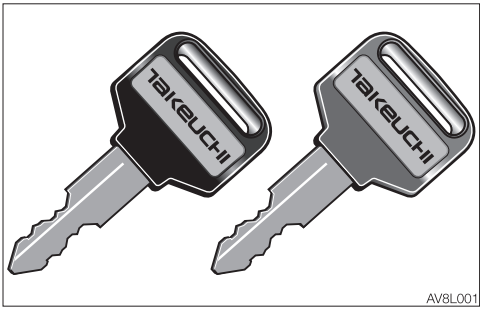

There are two types of starter key, red and black, which can be registered in the Takeuchi Security System.
The red key is the master key. The black key is the starting key.

STARTING THE ENGINE

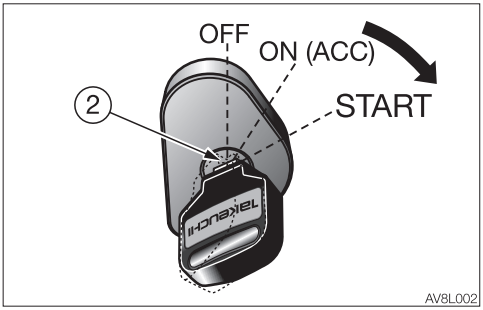

The engine can be started using the normal method with a registered BLACK key.
The engine cannot be started using the RED master key.
Refer to Chapter 3, “Starting and stopping the engine”.

If an attempt is made to start the engine with an unregistered key:

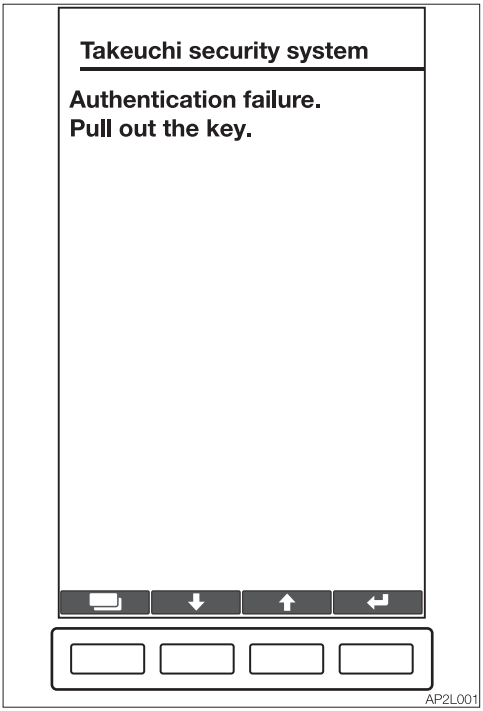

If an unregistered starter key is turned from the OFF to the ON (ACC) position, the message “Authentication failure” appears and the alarm starts sounding.
If this attempt is repeated five times in a row, the horn sounds for two minutes, and the engine cannot be started. The horn stops when the key is turned to the OFF position.

REGISTERING AND DELETING THE STARTER KEY

⚠ WARNING

- **Sit on the operator's seat.**
- **Raise the safety lock lever to the locked position.**
- **Clear all people from the machine and the area.**
- **Sound the horn to warn people around the machine.**

Registration may fail if the starter key is on a keyring or keychain; remove it before starting registration.
A malfunction could occur if multiple starter keys are brought near to the key cylinder. Be sure that no starter keys other than the correct key are near the key cylinder during registration.

Starter key registration procedure
For Steps 1 to 6 below, complete each step and proceed to the next one within five minutes. If no operation is performed for five minutes during this procedure, the system returns to the initial state.
From Step 7 onward, the system automatically ends the operation if no operation is performed for five minutes.

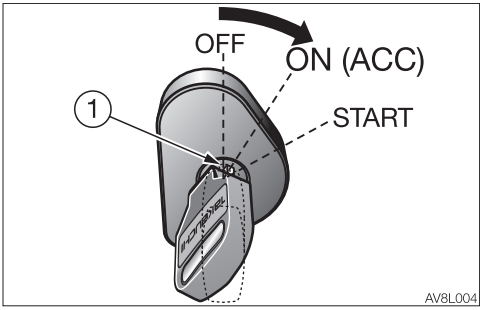

1. Insert the master key (1) into the starter switch and turn the key from the OFF to the ON (ACC) position.

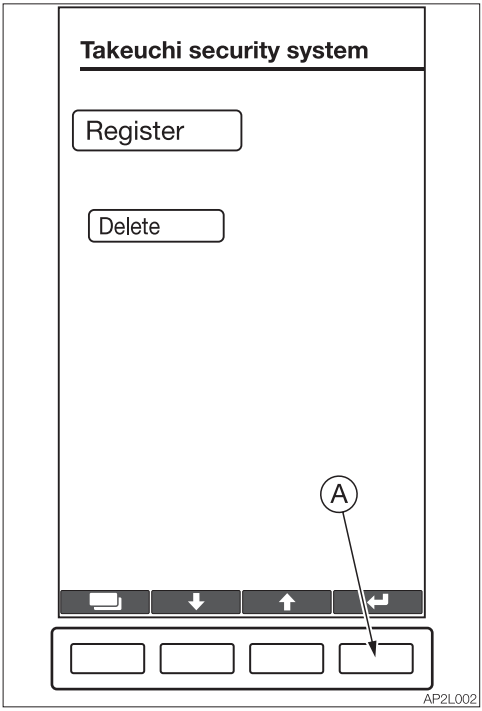

2. On the LCD, select “REGISTER” and press (A).

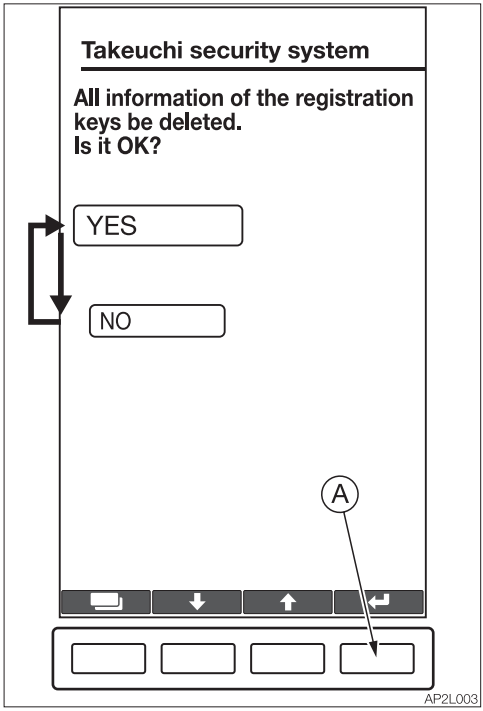

3. Select whether to delete all of the existing registration information.

   On the LCD, select “YES” and press (A): All registration information will be deleted; register a new key.
   On the LCD, select “NO” and press (A): A new starter key will be added to the existing registration information.

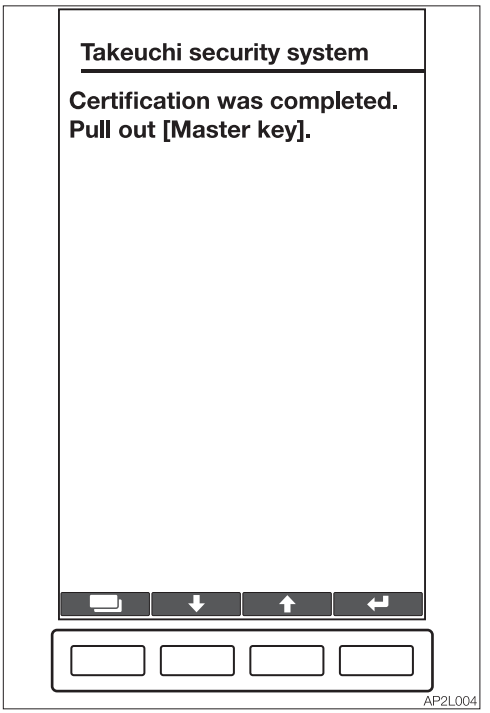

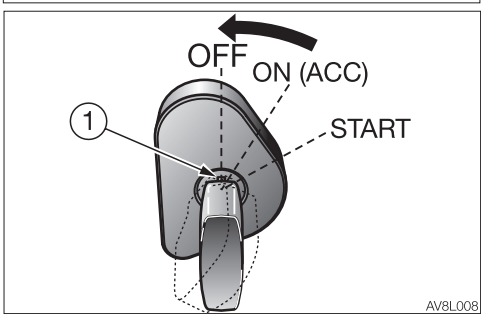

4. When the message “Certification was completed” appears on the LCD, turn the master key (1) from the ON (ACC) to the OFF position, and then remove it from the starter switch.
   The number (3) in the lower left indicates the number of starter keys currently registered (only for canopy). Up to 13 starter keys can be registered.

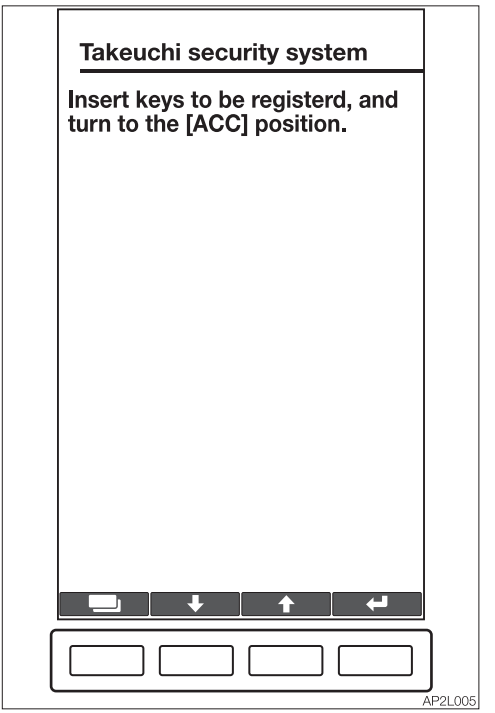

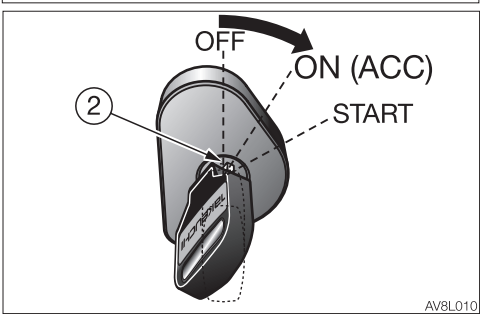

5. Insert the starter key (2) to be registered into the starter switch and turn the key from the OFF to the ON (ACC) position.

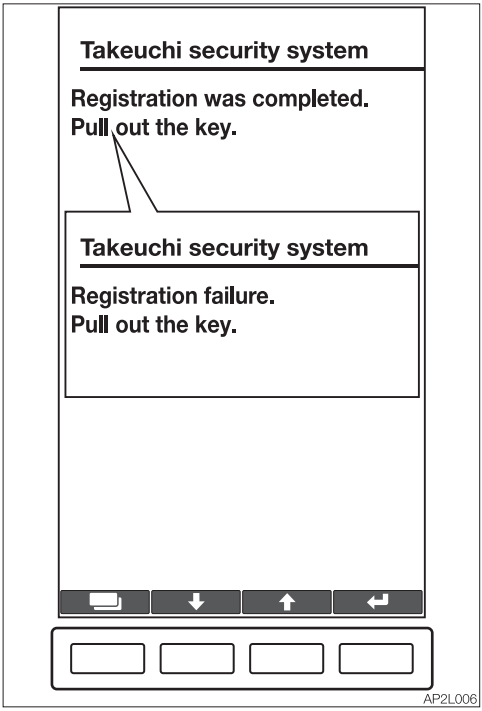

6. If the registration was successfully completed, the message “Registration was completed” appears. This means that the starter key (2) currently inserted has been registered.
   If the registration fails, the message “Registration failure” appears.

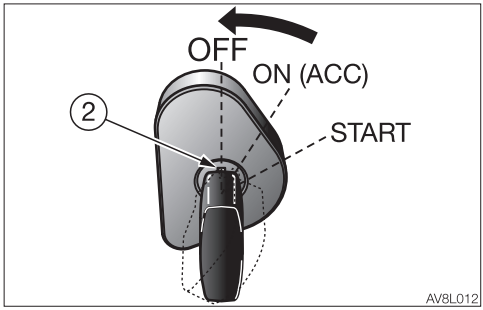

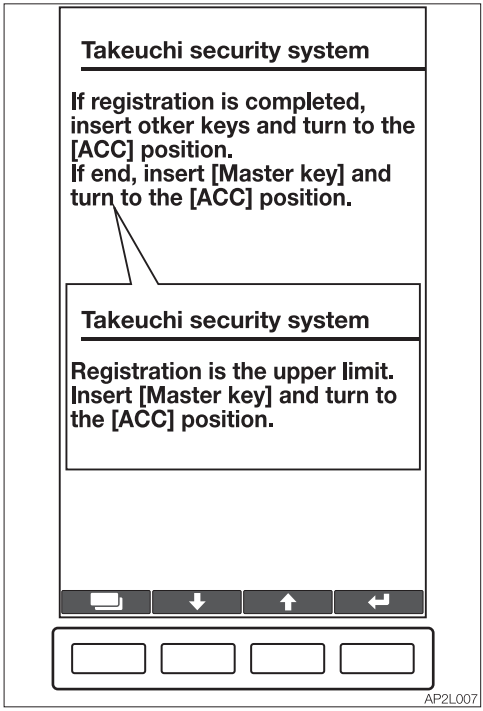

7. Turn the starter key (2) from the ON (ACC) to the OFF position, and then remove it from the starter switch.
   To continue registration, repeat the steps from Step 5.
   To end registration, proceed to Step 8.

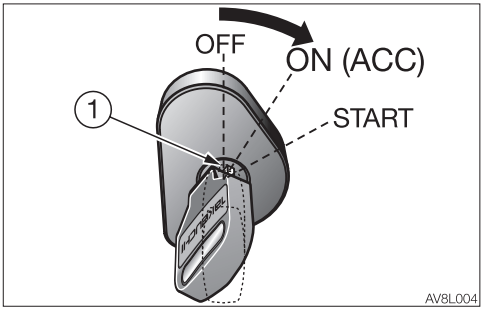

8. Insert the master key (1) into the starter switch and turn the key from the OFF to the ON (ACC) position. Or, wait for five minutes or more.

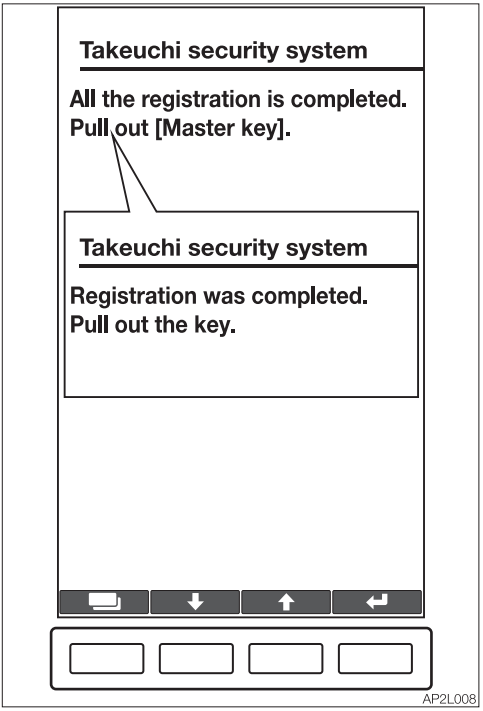

9. If any starter key has been registered, the message “All the registration is completed” appears. Turn the master key (1) from the ON (ACC) to the OFF position, and then remove it from the starter switch to complete the registration.
   If no starter key has been registered, the message “Registration failure” appears, and the registration information is returned to the initial state.

Deleting a registered starter key
The information of each registered starter key can be deleted to cancel its ability to start the engine.

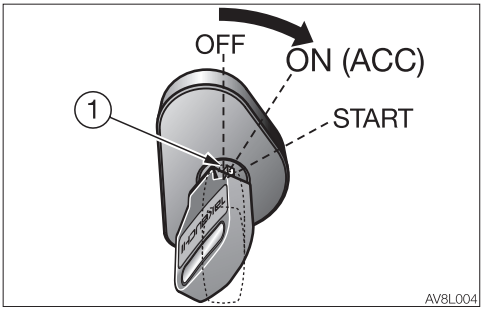

1. Insert the master key (1) into the starter switch and turn the key from the OFF to the ON (ACC) position.

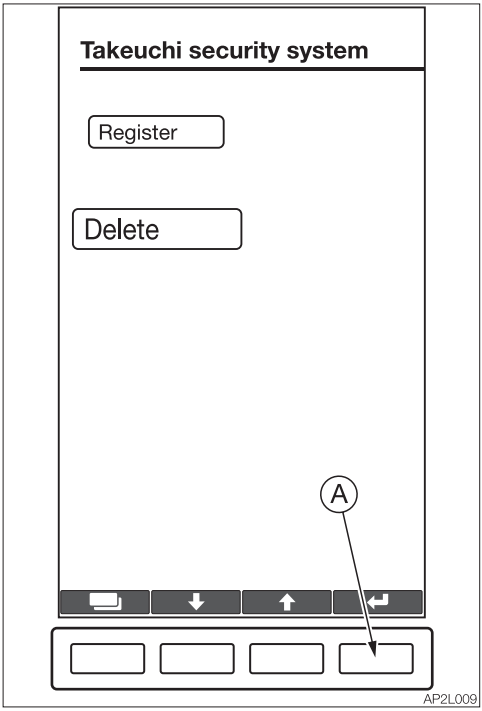

2. On the LCD, select “DELETE” and press (A).

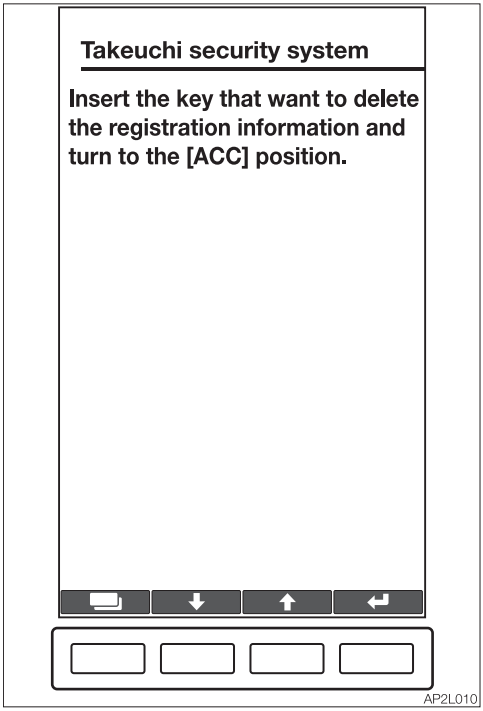

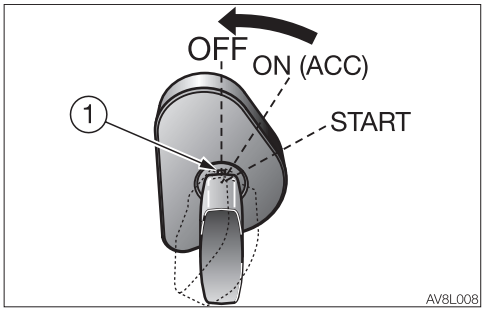

3. When the display shown as the illustration appears on the LCD, turn the master key (1) from the ON (ACC) to the OFF position, and then remove it from the starter switch.
Note: If the registered key is lost and you want to delete all registration information, please refer to STEP 3 (A) on page 8-25.

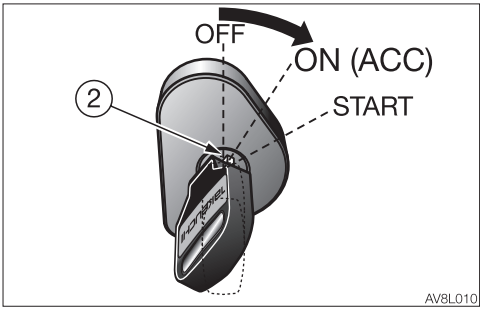

4. Insert the starter key (2) to be deleted into the starter switch and turn the key from the OFF to the ON (ACC) position.

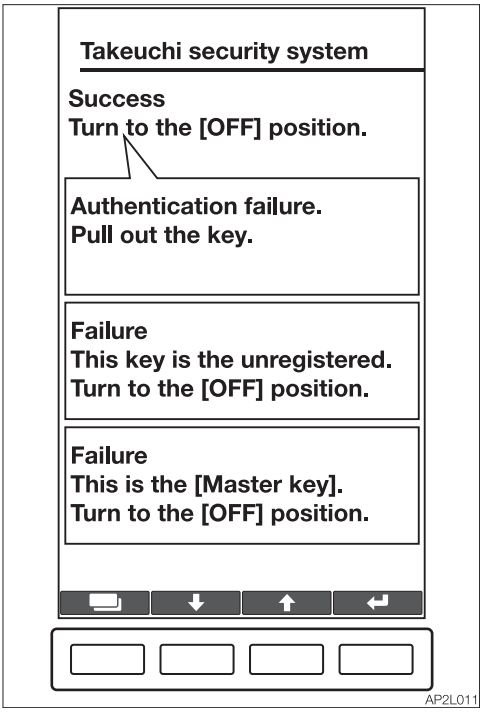

5. If the deletion is successful, the message “Success” appears. This means that the information registered for the starter key (2) currently inserted has been deleted. If the deletion fails, the message “Failure” or “Authentication failure” appears on the LCD. Remove the starter key, and then repeat the steps from Step 1 again.

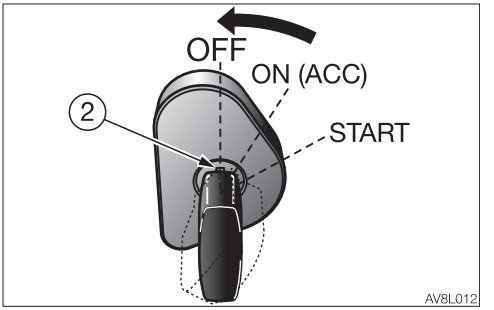

6. Turn the starter key (2) from the ON (ACC) to the OFF position, and then remove it from the starter switch.
To continue deletion, repeat the steps from Step 1.

IF THE MASTER KEY IS LOST

If you lose your master key, contact your service or sales dealer for assistance.

COUNTRIES WHERE THE SYSTEM CAN BE USED

To use the Takeuchi Security System, “radio wave authentication” must be obtained in the country where the system is to be used. The system can be used in the countries listed below, as of January 2017. Do not use the system in other countries. For details on how to disable the system, please contact your service or sales dealer for assistance.

Countries where the system can be used:
Ireland, Italy, UK, Estonia, Austria, Holland, Cyprus, Greece, Croatia, Sweden, Spain, Slovakia, Slovenia, Czech, Denmark, Germany, Hungary, Finland, France, Bulgaria, Belgium, Poland, Portugal, Malta, Latvia, Lithuania, Rumania, Luxemburg, Iceland, Norway, Liechtenstein, Switzerland, Turkey

TAKEUCHI FLEET MANAGEMENT (TFM)

⚠ CAUTION

- **Never disassemble the TFM. It may cause injury or failure.**
- **Any damage to the TFM device or wire harness may cause damage to the device and surrounding equipment.**



- Takeuchi Fleet Management (TFM) is a system that manages machine position information, operation information, and machine status using a communication device installed in the machine.
- Machines that support TFM are equipped with communication devices and are labeled as above.
- A communication contract is required to use TFM. Please contact our sales service for information regarding the contract.

IMPORTANT:

- **The TFM equipment has been tested and found to comply with the limits for a Class A and Class B digital device, pursuant to part 15 of the FCC Rules. These limits are designed to provide reasonable protection against signal interference when the equipment is operated in a commercial environment. This equipment generates, uses, and can emit radio frequency energy and, if not installed and used in accordance with the instruction manual, may cause signal interference to radio communications.**
- **Operation of this equipment in a residential area may cause signal interference in which the user may be required to take additional steps to correct the interference. To correct any interference issue, move the TFM equipped machine away from the affected device, or, if possible; relocate the affected device away from the TFM equipped machine.**
- **The TFM device uses mobile communication. Therefore, it may not function properly in places where the signal is weak (buildings, tunnels, underground, etc.).**
- **The TFM device complies with the RF radiation exposure limits of the FCC Rules. The product is tested for a separation distance of 0 mm from human bodies. It is advised for those with specific sensitive conditions to avoid close device-body exposure.**
- **Please be aware that storing a machine long-term may result in the loss of communication from the TFM device if its internal battery is drained.**
- **The TFM device consumes a small amount of machine battery power even when the key is in the OFF position. For extended storage, see “Maintenance during extended storage period” on page 5-81.**

Specification

Applicable machine models 514600636 to 514600890
Applicable machine models 514700252 to 514700520

M8HZT-E (For Europe)

Frequency	Power
UMTS:	
900 MHz	0.316 W
1900 MHz	0.316 W
GSM:	
900 MHz	2 W
1800 MHz	2 W

M8LZT-E (For North America)

Frequency	Power
LTE:	
700 MHz	0.2 W
850 MHz	0.2 W
1700/2100 MHz (AWS)	0.2 W
1900 MHz	0.2 W
UMTS:	
850 MHz	0.224 W
1900 MHz	0.224 W
1700/2100 MHz (AWS)	0.224 W

Applicable machine models 514600891 or later
Applicable machine models 514700521 or later

M7H (For Europe)

Frequency	Power
UMTS/HSPA:	
900 MHz	0.25 W
2100 MHz	0.25 W
GSM/GPRS:	
900 MHz	2 W
1800 MHz	1 W
GSM/EDGE:	
900 MHz	0.5 W
1800 MHz	0.4 W

M7L (For North America)

Frequency	Power
LTE Band:	
700 MHz	0.2 W
850 MHz	0.2 W
1700 MHz (AWS)	0.2 W
1900 MHz	0.2 W
UMTS Band:	
850 MHz	0.25 W
1900 MHz	0.25 W

First Published May 2017
Sixteenth Published June 2022

AN5EN015

OPERATOR'S MANUAL

TB2150 Hydraulic excavator

Edited and issued by TAKEUCHI MFG. CO., LTD.

ZTR Control Systems, LLC

955 Green Valley Road
London, Ontario, N6N 1E4
Tel: 1-519-452-1233
FAX: 1-519-452-7764

www.ztr.com
info@ztr.com

February 1, 2018

RE: M8HZT / M8HZT-E / M8HBZ / M8HBZ-E Radio Equipment Directives (RED)

To whom it may concern,

This letter is to confirm that ZTR products **M8HZT / M8HZT-E / M8HBZ / M8HBZ-E** sufficiently demonstrate compliance to the Radio Equipment Directives (RED). The M8HZT-E is a superset of functionality of these other three devices and thereby is represented of compliant performance for the other three models.

The results of these tests can be found in **EMC Test Report (EMC_SL17052501-CAL-004-TTU4531HEW)**, issued on June 20, 2017. The tests were carried out by a notarized 3rd party certification lab **Siemic**.

This Declaration of Conformity is issued under the sole responsibility of ZTR Control Systems (or the manufacturer)

Please direct any test results questions or concern to ZTR's Engineering Group for clarification.

Regards,

Brent Horne
Director of Product Development
ZTR Control Systems

ZTR Control Systems, LLC

955 Green Valley Road
London, Ontario, N6N 1E4
Tel: 1-519-452-1233
FAX: 1-519-452-7764

www.ztr.com
info@ztr.com

April 5, 2019

RE: M7H

To whom it may concern,

This letter is to confirm that ZTR product **M7H** sufficiently demonstrate compliance to CE and the Radio Equipment Directives (RED). The M7H satisfies all the technical regulations applicable to the product within the scope of Council Directives 2014/53/EU, 2015/35/EU and 2014/30/EU. The following tests were completed successfully.

EN 60950-1: 2006+A11: 2009+A1: 2010+A12: 2011+A2: 2013
EN62311:2008
ETSI EN 300 328 V2.1.1 (2016-05)
ETSI EN 303 413 V1.1.1 (2017-06)
Draft ETSI EN 301 489-52 V1.1.0 (2016-11)
Draft ETSI EN 301 489-17 V3.2.0 (2017-03)
Draft ETSI EN 301 489-1 V2.2.0 (2017-03)
Draft ETSI EN 301 489-19 V2.1.0 (2017-03)
EN 55032: 2015
ETSI EN 301 511 V12.5.1 (2017-03)
ETSI EN 301 908-1 V11.1.1 (2016-07)
ETSI EN 301 908-2 V11.1.2 (2017-08)

(Title(s) of regulations, standards, etc.)

All essential radio test suites have been carried out.

The tests were carried out by a notarized 3rd party certification lab MiCOM Labs inc.

This Declaration of Conformity is issued under the sole responsibility of ZTR Control Systems (or the manufacturer).

Please direct any test results questions or concern to ZTR's Engineering Group for clarification.

Regards,

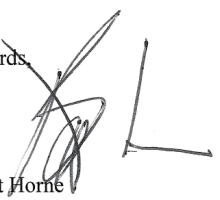

Brent Horne
Director of Product Development
ZTR Control Systems

<Cab>

ASAHI DENSO

6-2-1 Somejidai, Hamakita-ku, Hamamatsu, Shizuoka 434-0046, Japan

EU DECLARATION of CONFORMITY (DoC)

This declaration of conformity is issued under the sole responsibility of the manufacturer:

Name:	ASAHI DENSO CO.,LTD
Address:	6-2-1 Somejidai, Hamakita-ku, Hamamatsu, Shizuoka, 434-0046 Japan

We declare that the DoC is issued under our sole responsibility and belongs to the following product.

Object of the declaration:

Product Name	Immobilizer
Model Name	CZ156
Accessories	N/A

The object of the declaration described above is in conformity with the relevant Union harmonization legislation:

Radio Equipment (RE) Directive (2014/53/EU)

The following harmonized standards and technical specifications have been applied:

Health & Safety (Article 3.1(a)):	EN 60065: 2014
EMC (Article 3.1(b)):	EN 301 489-1 V2.1.1 EN 301 489-3 V2.1.1 (Final draft)
Radio Spectrum (Article 3.2):	EN 300 330 V2.1.1

Japan, Shizuoka	May 29, 2017	Tomohiro Yaguchi
Place of Issue:	Date of Issue:	Tomohiro Yaguchi Section chief Engineering Department

ASAHI DENSO
6-2-1 Somejidai, Hamakita-ku, Hamamatsu, Shizuoka 434-0046, Japan

UK DECLARATION of CONFORMITY (DoC)

This declaration of conformity is issued under the sole responsibility of the manufacturer:

Name:	ASAHI DENSO CO.,LTD.
Address:	6-2-1 Somejidai, Hamakita-ku, Hamamatsu, Shizuoka, 434-0046 Japan

We declare that the DoC is issued under our sole responsibility and belongs to the following product.

Object of the declaration:

Product Name	Immobilizer
Model Name	CZ156
Accessories	N/A

The object of the declaration described above is in conformity with the relevant statutory requirements:

STATUTORY INSTRUMENTS 2017 No. 1206 TELECOMMUNICATIONS (The Radio Equipment Regulations 2017)

The following designated standards and technical specifications have been applied:

Health & Safety (Regulation 6.1(a)):	EN 62368-1: 2014
EMC (Regulation 6.1(b)):	EN 301 489-1 V2.1.1 EN 301 489-3 V2.1.1 (Final draft)
Radio Spectrum (Regulation 6.2):	EN 300 330 V2.1.1

Signed for and on behalf of:

Shizuoka, Japan	September 8, 2021	Tomohiro Yaguchi
Place of Issue:	Date of Issue:	Tomohiro Yaguchi Section chief Engineering Department

Declaration of Conformity

We herewith declare that the following named machine, based on its conception and design, and in the form brought into service is in accordance with the relevant, basic safety and health requirements of the following EU directives. In case of any alteration of the machine not coordinated with us, this certificate loses its validity.

Designation of the machine	Hydraulic Excavator
Manufacturer	TAKEUCHI MFG. CO., LTD 205 Uwadaira, Sakaki-machi, Hanishina-gun, Nagano 389-0605, Japan

Model	TB2150 <S/N 514600636 ~>
Engine type	CFXI85BU (e1*97/68RA*2012/46*0812*Δ)
Engine performance	85 kW @ 2000 rpm

The machine is in accordance with the requirements of EU directives:

1) Machine Directive: 2006/42/EC and appendix
2) Electromagnetic Compatibility-Regulation: 2014/30/EU and appendix.
3) Noise Directive: 2000/14/EC (Evaluation procedure according to appendix VI), 2005/88/EC and appendices.
4) Regulations on engine emissions: 97/68/EC as last amended by Directive 2012/46/EC.

Harmonized norms: EN474-1:2006+A5:2018, EN474-5:2006+A3:2013

Compiler of the technical files:
Daniel Bailli
Parc d'Activités des Béthunes
3, avenue de la Mare 95310 SAINT OUEN L'AUMONE,
CS 29258 – SOA

Issued in Sakaki, Japan
Akio Takeuchi, Chairman

Declaration of Conformity

We herewith declare that the following named machine, based on its conception and design, and in the form brought into service is in accordance with the relevant, basic safety and health requirements of the following EU directives. In case of any alteration of the machine not coordinated with us, this certificate loses its validity.

Designation of the machine	Hydraulic Excavator
Manufacturer	TAKEUCHI MFG. CO., LTD 205 Uwadaira, Sakaki-machi, Hanishina-gun, Nagano 389-0605, Japan

Model	TB2150 <S/N 514700252 ~>
Engine type	CFVI85BU (e1*97/68RA*2012/46*0849*Δ)
Engine performance	85 kW @ 2000 rpm

The machine is in accordance with the requirements of EU directives:

1) Machine Directive: 2006/42/EC and appendix
2) Electromagnetic Compatibility-Regulation: 2014/30/EU and appendix.
3) Noise Directive: 2000/14/EC (Evaluation procedure according to appendix VI), 2005/88/EC and appendices.
4) Regulations on engine emissions: 97/68/EC as last amended by Directive 2012/46/EC.

Harmonized norms: EN474-1:2006+A4:2013, EN474-5:2006+A3:2013

Compiler of the technical files:
Daniel Bailli
Parc d'Activités des Béthunes
3, avenue de la Mare 95310 SAINT OUEN L'AUMONE,
CS 29258 – SOA

Issued in Sakaki, Japan
Akio Takeuchi, Chairman

Declaration of Conformity

We herewith declare that the following named machine, based on its conception and design, and in the form brought into service is in accordance with the relevant, basic safety and health requirements of the following EU directives. In case of any alteration of the machine not coordinated with us, this certificate loses its validity.

Designation of the machine	Hydraulic Excavator
Manufacturer	TAKEUCHI MFG. CO., LTD 205 Uwadaira, Sakaki-machi, Hanishina-gun, Nagano 389-0605, Japan

Model	TB2150 <S/N 514700393 ~>
Engine type	C5VI85BU (e1*2016/1628*2016/1628EV5/D*0001*Δ)
Engine performance	85 kW @ 2000 rpm

The machine is in accordance with the requirements of EU directives:

1) Machine Directive: 2006/42/EC and appendix
2) Electromagnetic Compatibility-Regulation: 2014/30/EU and appendix.
3) Noise Directive: 2000/14/EC (Evaluation procedure according to appendix VI), 2005/88/EC and appendices.
4) Regulations on engine emissions: Regulation (EU) 2016/1628, as last amended by Regulation 2016/1628.

Harmonized norms: EN474-1:2006+A6:2019, EN474-5:2006+A3:2013

Compiler of the technical files:
Daniel Bailli
Parc d'Activités des Béthunes
3, avenue de la Mare 95310 SAINT OUEN L'AUMONE,
CS 29258 – SOA

Issued in Sakaki, Japan
Akio Takeuchi, Chairman

Declaration of Conformity

We herewith declare that we take full responsibility that the following named machine, based on its conception and design, and in the form brought into service is compliant with the relevant, basic safety and health requirements of the following (UK) enactments. In case of any alteration of the machine not coordinated with us, this certificate loses its validity.

Designation of the machine	Hydraulic Excavator
Manufacturer	TAKEUCHI MFG. CO., LTD 205 Uwadaira, Sakaki-machi, Hanishina-gun, Nagano 389-0605, Japan

Model	TB2150 <S/N 5147×××××>
Engine type	C5VI85BU (e1*2016/1628*2016/1628EV5/D*0001*Δ)
Engine performance	85 kW @ 2000 rpm

The machine is compliant with the following UK enactments:

1) Supply of Machinery (Safety) Regulations 2008 (S.I. 2008/1597)
2) Electromagnetic Compatibility Regulations 2016 (S.I. 2016/1091)
3) Noise Emission in the Environment by Equipment for use Outdoors Regulations 2001 (S.I. 2001/1701)

And the Designated Standards referred to and adopted therein and particularly EN474-1:2006+A6:2019, EN474-5:2006+A3:2013

Compiler of the technical files:
Daniel Bryning (Product Manager)
TAKEUCHI MFG. (UK) Ltd.
Unit E2B, John Boyd Dunlop Drive
Kingsway Business Park Rochdale OL16 4NG

Issued in Sakaki, Japan
Akio Takeuchi, Chairman

 **WARNING:** Breathing diesel engine exhaust exposes you to chemicals known to the State of California to cause cancer and birth defects or other reproductive harm.

- Always start and operate the engine in a well-ventilated area.
- If in an enclosed area, vent the exhaust to the outside.
- Do not modify or tamper with the exhaust system.
- Do not idle the engine except as necessary.

For more information go to www.P65warnings.ca.gov/diesel.



WARNING:

Cancer and Reproductive Harm –
www.P65Warnings.ca.gov

About the emission warranty statements
Please view the DEUTZ warranty statements which are accessible on the official DEUTZ website:
https://www.deutz.com/en/about-us/warranty-statement/



05792-00035