Braking when descending slopes

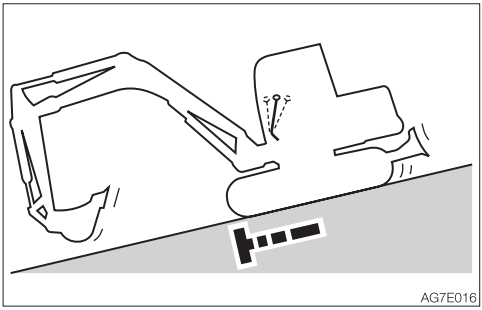

When descending slopes, the brakes are applied automatically once the travel levers are returned to the neutral position.

If the crawler slips

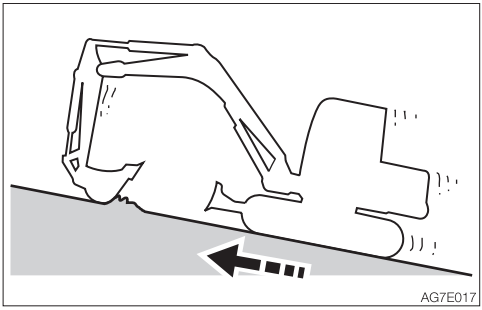

If the crawler slips while climbing a slope and impossible to travel, use the pulling force of the arm to climb the slope.

If the engine stops

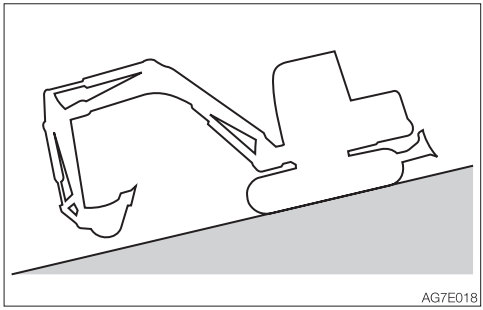

If the engine stops when descending a slope, set the travel levers to the neutral position, stop the machine, then start the engine.

Do not open the door while traveling on slopes



Opening the door while traveling on slopes is dangerous, as the force required to open and close the door changes abruptly. Always keep the door closed when traveling on slopes.

GETTING OUT OF MUD

If the machine gets stuck in mud, use the procedure below to get it out.

If one crawler is stuck

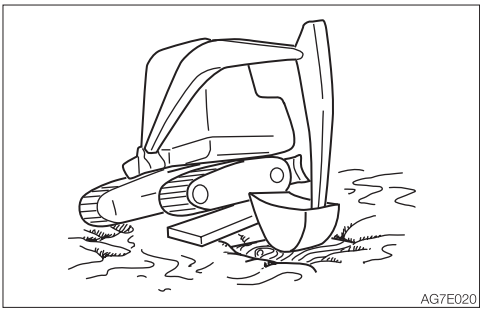

1. Swing the bucket to the side of the crawler being stuck.
2. Set the arm and boom to an angle of 90 to 110°.
3. Press the bottom of the bucket (not the teeth) against the ground.
4. Place a plank or the like under the lifted crawler.
5. Lift the bucket and slowly move the machine out of the mud.

If both crawlers are stuck

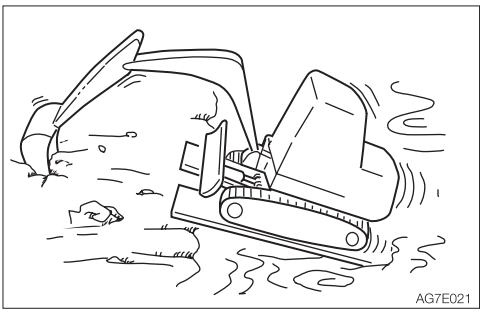

1. Perform the steps 1 to 4 above for both crawlers.
2. Dig the bucket into the ground in front of the machine.
3. Pull with the arm while traveling forward to slowly move the machine out.

OPERATIONS POSSIBLE WITH THIS MACHINE

Excavating

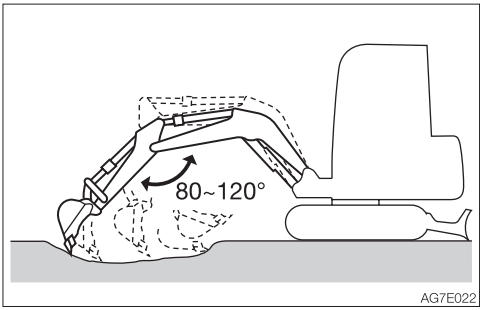

1. Set the dozer blade on the side opposite to the side you want to dig on.
2. Use the arm and bucket and dig with shallow, long strokes. The maximum digging force can be obtained when the boom and arm angle is 80 to 120°. Use this angle for effective digging.

Digging ditches

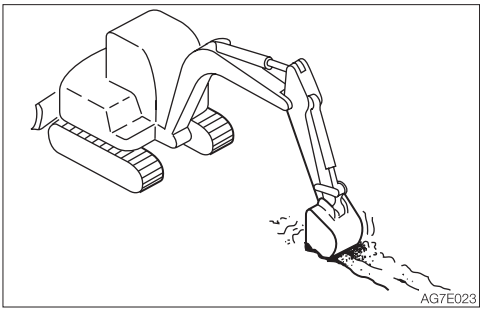

Install a bucket suited for digging ditches and set the crawlers parallel to the ditch to be dug for greater efficiency.
When digging wide ditches, dig the sides first, and then dig the center.

Digging side drains

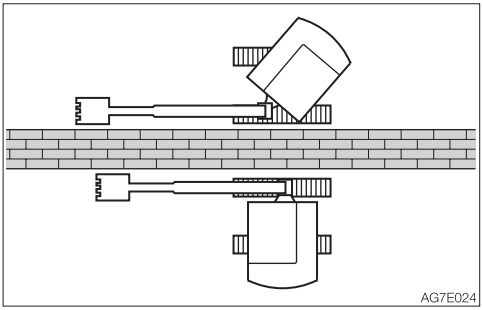

Use the boom swing function to dig side ditches as shown in the figure.

Loading

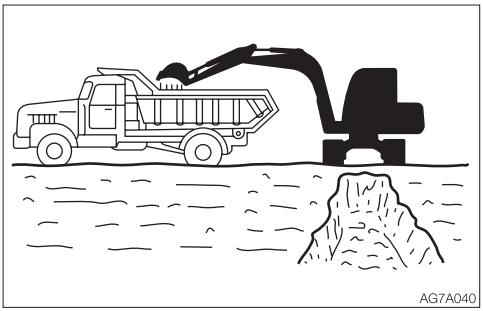

When loading dirt onto a truck bed, load from the back of the truck, as it is easier and able to load more load than doing it from the front.
Also, use a small slewing angle for greater efficiency.

Leveling

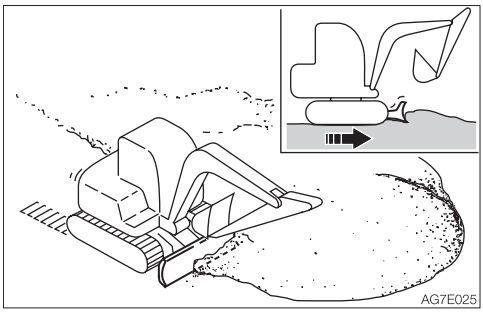

1. Bring the hoe attachment close to the body.
2. Gradually remove the dirt from the side of the mound.
3. Once the mound is low, remove the dirt from the top. If the load becomes too heavy for the machine body, adjust by raising or lowering the dozer blade.

PARKING THE MACHINE

PARKING

⚠ WARNING

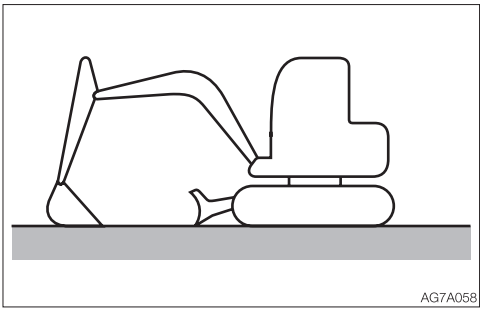

- **Park the machine on a flat, rigid and safe ground. Set the parking brake.**

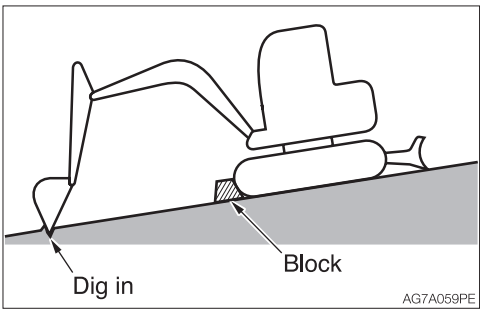

If you must park on a slope or incline, park the machine securely and block the movement of the machine.

- **When parking on a street, use barriers, caution signs, lights, etc., so that the machine can easily be seen even at night to avoid collision with other vehicles.**
- **Before leaving the operator's seat, raise the safety lock lever to engage the lock and stop the engine. Also, be sure to remove the key, lock the door and covers, take it with you and store it in a specified place.**

1. Set the left and right travel levers to the neutral position.
2. Return the throttle lever to idle the engine at low speed.
3. Lower the bucket and the dozer blade to the ground.
4. Raise the safety lock lever to the locked position.
5. Stop the engine and remove the key. Refer to "Stopping the engine" on page 3-5.

INSPECTION AND CHECKS AFTER STOPPING THE ENGINE

1. Check for oil or water leak and inspect the working equipment, covers and undercarriage. If any irregularities are found, repair.
2. Fill up the fuel tank. Refer to "Inspecting the fuel level" on page 5-20.
3. Remove any paper scraps or dirt from the engine room.
4. Remove any mud from the undercarriage.

Locking

Be sure to lock the following places:

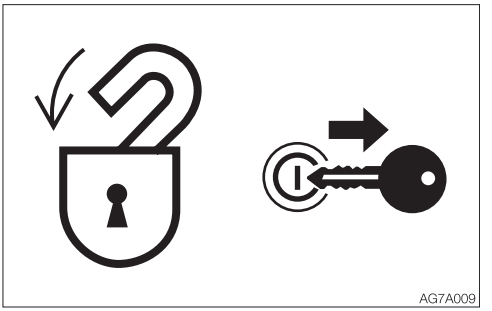

- Fuel lid
- Cab door
- Manual storage compartment
- Engine hood
- Covers

HANDLING IN COLD CLIMATES

PREPARING FOR COLD CLIMATES

Starting engine in cold climates is not easy, and it becomes more difficult if the coolant freezes. Prepare for cold-climate problems as follows.

Replacing the fuel and lubricant
Replace the hydraulic oil, engine oil and fuel with those intended for cold climates.
Refer to “Fuel and lubricant table” on page 5-4.

Engine coolant

⚠ WARNING

The engine coolant is combustible. Keep away from flame.
Use long-life coolant (antifreeze) and tap water for the engine coolant.

Note: New machines are delivered with JIS Type 2 long-life coolant (antifreeze) at a concentration of 50%.
Refer to “Fuel and lubricant table” on page 5-4.

Battery
As the temperature drops, the battery performance decreases.
Inspect the battery. If it is discharging, contact a Takeuchi service agent to have the battery recharged.
Refer to “Inspecting the battery fluid level and replenishing” on page 5-32.

CAUTIONS AFTER OPERATIONS

Observe the following cautions to prevent mud, water, or the undercarriage from freezing and making it impossible for the machine to move.

- Remove all mud and water from the machine body. In particular, wipe the hydraulic cylinder rod clean to prevent damage to the seal caused by mud or dirt on the rod surface getting inside the seal together with drops of water.
- Park the machine on hard and dry ground. If this is impossible, park the machine on a wooden board placed on ground.
- Drain any water in the fuel tank to prevent it from freezing.
  Refer to “Draining the water from the fuel tank” on page 5-31.
- As the battery capacity drops markedly in low temperatures, cover the battery or remove it from the machine and keep it in a warm place.
  If the electrolyte level is low, add distilled water in the morning before beginning work. To prevent the battery electrolyte from freezing in the night, do not add water after the day’s work.

AFTER THE COLD CLIMATE

When the climate becomes warmer, do as follows:

- Replace the fuel and oil for all parts with those specified in the “Fuel and lubricant table”.
  Refer to “Fuel and lubricant table” on page 5-4.
- If a coolant of “one season type” is used, drain the cooling system completely, clean out the inside of the cooling system thoroughly, and fill with tap water.
  Refer to “Cleaning the engine cooling system” on page 5-45.

HANDLING RUBBER CRAWLERS

Rubber crawlers have an inherent weakness, lack of strength, due to their use of rubber. Be sure to observe the prohibitions and cautions below to prevent the crawlers from being damaged or coming off.

PROHIBITIONS

Do not travel or operate the machine in the following places:

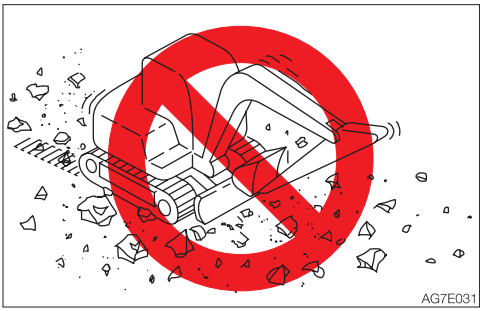

- Traveling and slewing on crushed rock, extremely rough hard rock, steel beams, scrap iron, or near the edges of steel plates will cause damage to the rubber crawlers.

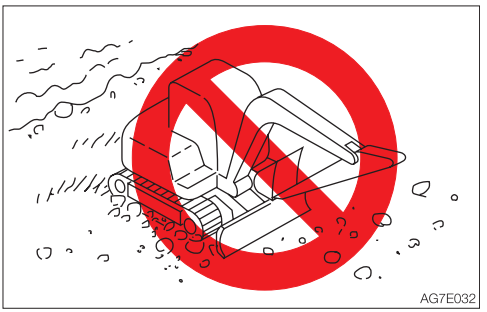

- Traveling on riverbeds or places where there are large numbers of boulders may cause the stones to get caught and damage the crawler or make the crawler come off.
- Do not use the machine on the seashore. The salt may corrode the steel core.

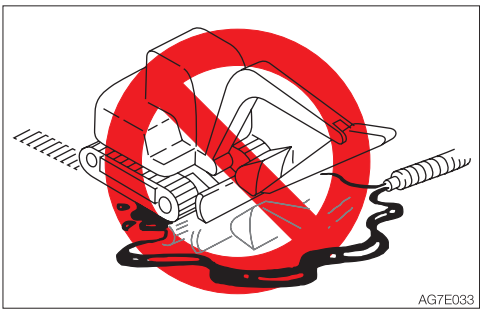

- Do not let fuel, oil, salt or chemical solvents get on the crawlers. These substances may corrode the bonding of the steel cores on the crawlers, resulting in rust or peeling. If any of these substances gets on the crawler, immediately clean it off with water.



- It will cause an irregular wear or damage to the lugs, if the machine travels on irregular surfaces such as recently paved with asphalt, exposed to a bonfire or of hot iron sheets under the blazing sun.
- Do not move earth in places where the rubber crawlers may slip. Doing so may speed up lug wear.

CAUTIONS

Observe the following cautions when operating the machine:

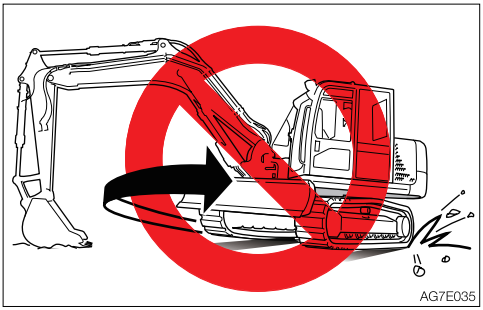
AG7E035

- Do not turn the undercarriage with the front of the machine body lifted using the hoe attachment (the upperstructure is not turned). Doing so will twist the crawlers with the load concentrated on a single point on the crawler belt, causing rapid damage to the crawlers.
- Avoid changing course abruptly or spin-turning on concrete surfaces whenever possible. Doing so may wear or damage the rubber crawlers.
- Avoid drops that may expose the rubber crawlers to strong shocks.
- Salt, potassium chloride, ammonium sulfate, potassium sulfate, and triple superphosphate of lime can damage the crawler belts. If any of these substances gets on the crawler belts, wash if off thoroughly with water.
- Do not let the sides of the rubber crawlers rub against concrete or walls.
- Do not damage the rubber crawlers by hitting the bucket against them.
- Be especially careful on snowy or frozen surfaces in winter, as the crawler belts tend to slip in such conditions.
- Use rubber crawler belts at temperatures between –25°C to +55°C (–14°F to 131°F).
- When storing the rubber crawlers for long periods of time (three months or more), do so indoors in a place not exposed to direct sunlight or rain.

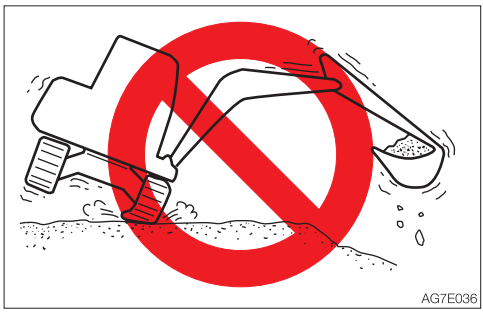
AG7E036

- Rubber crawler belts are not as stable as steel crawler belts since the entire lugs are made of rubber. Be very careful when slewing and swinging sideways.

PREVENTING THE RUBBER CRAWLERS FROM COMING OFF

Observe the following cautions to prevent the crawler from coming off:

- Always keep the crawlers at the proper tension.

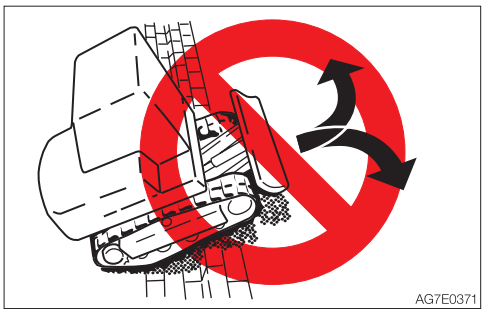
AG7E0371

- When traveling over a large step such as a cobblestone or rock (20 cm (8 in.) or deeper), climb up the step at the right angle and do not change courses on top of the step.

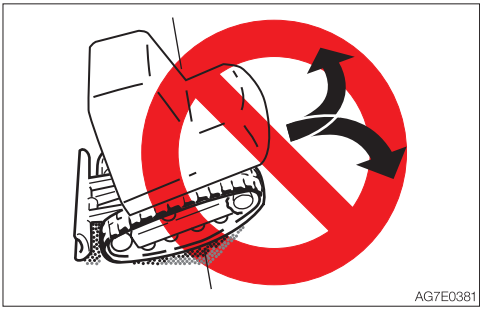

• When climbing in reverse, do not change directions at the point where the slope starts.



• Avoid traveling by setting one crawler on a slope or projecting portion and the other crawler on a flat surface (with the machine at a tilt of 10° or more). Travel with both crawlers set on flat surfaces.

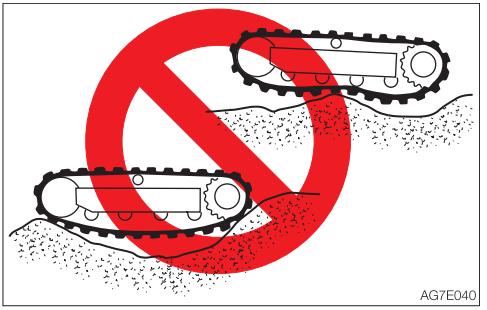

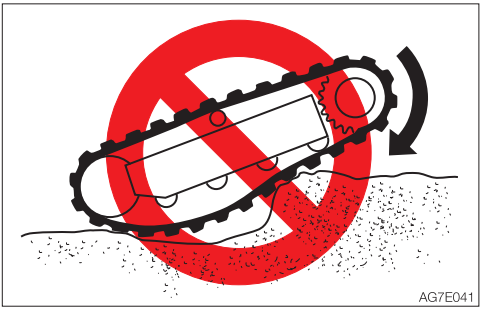

• Do not change directions when the crawler belts are slack as shown in the figure.

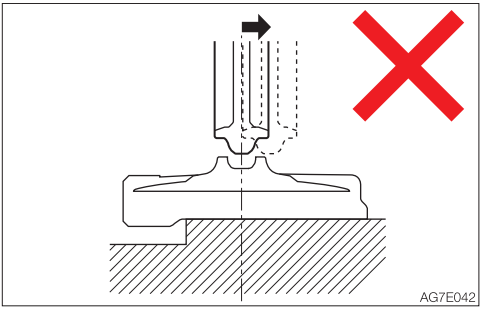

• The rubber crawler belts will come off if the machine travels backward in this condition.

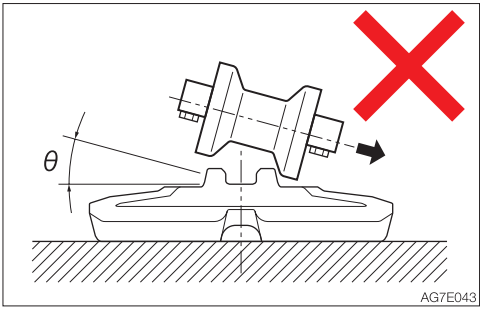

• The rubber crawler belts will come off if the machine turns in this condition.

TRANSPORT



LOADING AND UNLOADING

⚠ WARNING

The machine may roll or tip over or fall while being loaded or unloaded. Take the following precautions:

- **Select a firm, level surface and keep sufficient distance from road shoulders.**
- **Secure the ramps of adequate strength and size to the truck bed. The slope of the ramps must not exceed 15°. If the rumps are bowed down too low, support them with poles or blocks.**
- **Never use the working equipment to load or unload the machine. Doing so may result in tipping over or falling down of the machine.**
- **Keep the truck bed and loading ramps clean of oil, soil, ice, snow, and other materials to prevent the machine from sliding sideways. Clean the crawlers.**
- **Chock the transporter wheels to prevent movement.**
- **When being loaded or unloaded, travel slowly in 1st (low) gear by following the signal from the signal person.**
- **Never change courses on the ramp.**
- **Do not slew/swing on the ramp. The machine may tip over.**
- **When slewing/swinging on the truck bed, do it slowly as the footing should be unstable.**
- **Lock the cab door after being loaded, if applicable. Otherwise, the door may open during transport.**
- **Chock the tracks and secure the machine to the truck bed with wire rope or chain.**

When loading or unloading the machine, be sure to use ramps or a platform and follow the procedure below.

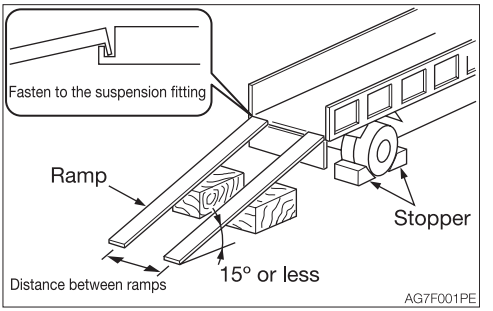

1. Set the parking brake on the transporter and chock the wheels.
2. Fix the ramps securely to the truck bed. The slope of the ramps must not exceed 15°.
3. Align the center of the truck bed with the center of the machine, and of the ramp with the center of the crawler.
4. Make sure the dozer blade does not hit the ramps.
5. Lower the hoe attachment as far as possible without letting it touch the transporter.
6. Decrease the engine speed.

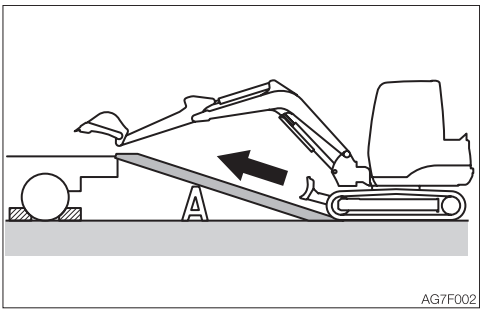

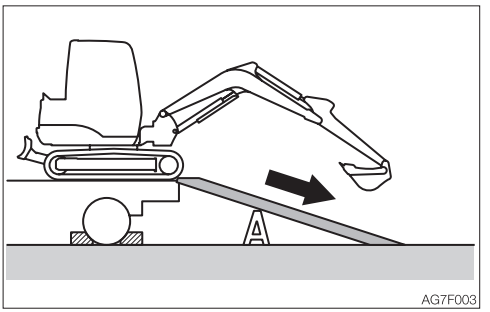

7. Drive the machine straight toward the ramps and travel up or down the ramps at 1st (low) speed, by following the signal from the signal person.
8. Load the machine at the specified position on the transporter.
   Refer to “Transporting posture” on page 4-6.

HOISTING THE MACHINE

⚠ WARNING

- **Know and use the correct crane signals.**
- **Check the hoisting points for any damage or deformation on a daily basis and replace as necessary.**
- **Check the hoisting equipment for damaged or missing parts on a daily basis and replace as necessary.**
- **When hoisting, use a wire rope capable of lifting the machine mass.**
- **Hoist the machine in only as manner described in the procedure below. Do not do it in any other manner. Doing so is dangerous as it may result in the machine losing its balance.**
- **Do not hoist the machine with an operator on it.**
- **When hoisting, hoist slowly so that the machine does not tip.**
- **Keep everyone out of the area when hoisting. Do not move the machine over the heads of the persons.**

IMPORTANT: This hoisting method applies to machines with standard specifications. The center of gravity differs according to the attachments and optional equipment installed.
Contact your Takeuchi service agent for details.

Hoisting

1. Slew the upperstructure so that the dozer blade is at the rear of the machine (set the upperstructure parallel to the track frame).
2. Raise the dozer blade fully.
3. Extend the bucket cylinder and arm cylinder fully to raise the boom to its uppermost position.
4. If the boom is swung to either the left or right side, set it in the neutral position.
5. Raise the safety lock lever to the locked position.
6. Stop the engine, remove the starter key and get off the machine.
7. Install the wire ropes as shown on the figure below. Install the wire ropes and hoisting attachment without letting them touch the machine body.
8. Hoist the machine slowly until it leaves the ground.
9. Stop hoisting until the machine becomes stable, and then start hoisting the machine slowly again.

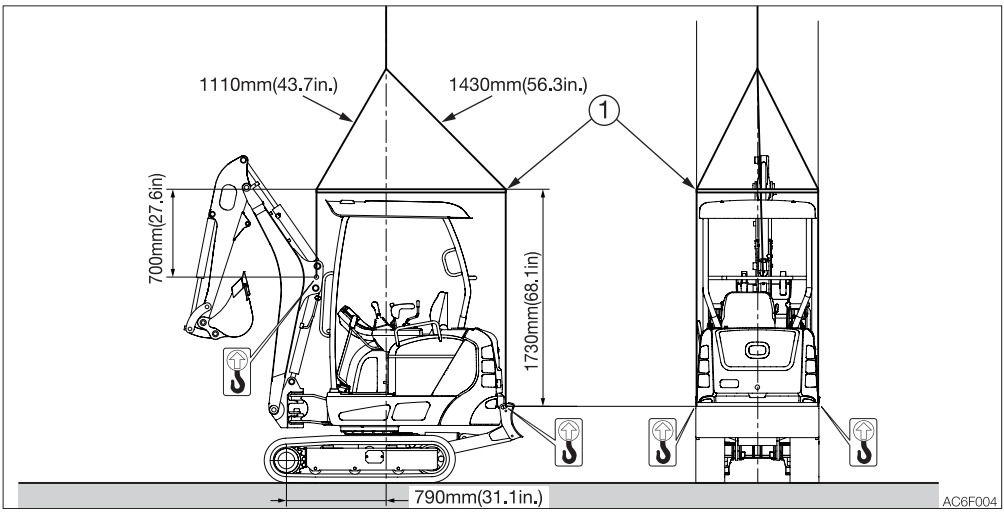

(1): Lifting tool

SECURING THE MACHINE

⚠ WARNING

Check the tie down point for any damage or deformation on a daily basis and replace as necessary.

After loading the machine at the specified position, secure it as described below.

Transporting posture

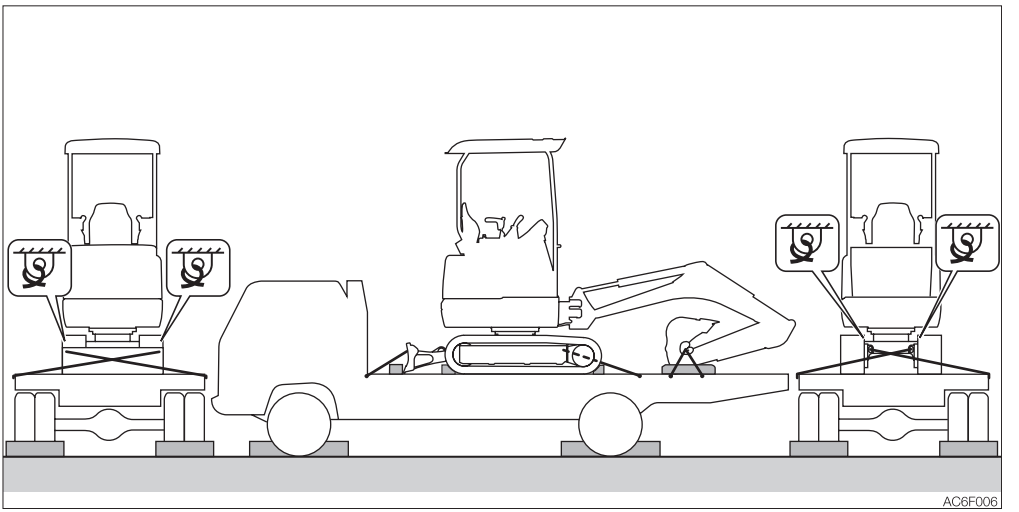

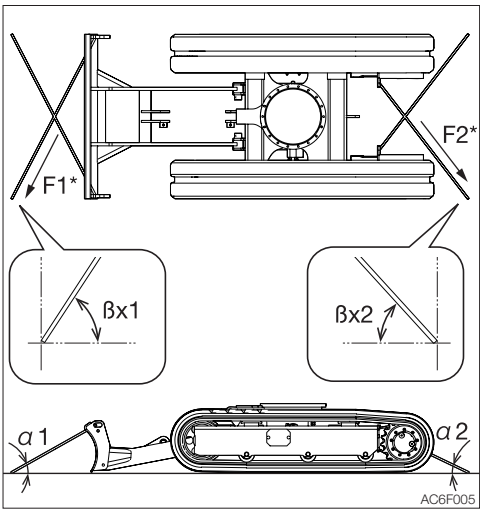

α1	30°
α2	26°
βx1	63°
βx2	52 to 58°
F1*	15.2 kN
F2*	13.3 kN

*: Distributed tying-down force

1. Lower the dozer blade.
2. Extend the bucket cylinder and arm cylinder fully, and then lower the boom.
3. Raise the safety lock lever to the locked position.
4. Stop the engine, remove the starter key and lock all locks.
5. Place the stoppers (chocks) in front and behind the crawlers.
6. Install a chain or wire rope over the lower frame of the machine and fasten it securely to prevent the machine from slipping sideways.
7. Secure the bucket with a chain or wire rope.

IMPORTANT: Place a wooden block under the bucket to protect the floor from damage caused by the bucket.

Precautions to be taken during transportation

⚠ WARNING

- **Know and follow the applicable safety rules, vehicle code and traffic laws when transporting the machine.**
- **Select the best transport route by considering the length, width, height and weight of the truck with the machine loaded on it.**
- **Never abruptly start or stop or run at a high speed at the sharp curves during transport. Doing so will move or lose the balance of the loaded machine.**

MAINTENANCE



GENERAL

MAINTENANCE OVERVIEW

To keep the machine in good condition and use if for a long period, perform the inspection and maintenance properly and safely following the procedures recommended by this manual.

The inspection and maintenance items are divided into groups according to the machine's total operating time: every 10 hours (walk-around and daily inspection), every 50 hours, every 250 hours, etc. Refer to the hour meter readings to determine when to schedule an inspection and maintenance. Items for which it is not possible to determine the inspection and maintenance interval are included under "When Required".

When operating the machine in extremely harsh environments (with high dust levels or high temperatures), inspection and maintenance should be performed earlier than the times specified on the Maintenance List.

CAUTIONS ON MAINTENANCE

Do not perform any other inspection and maintenance works than those listed in this manual.
For works not listed in this manual, ask your sales or a service dealer for help.

Keep the machine clean
- Clean the machine before performing inspection and maintenance and try to keep it clean.
- Stop the engine before washing the machine. Cover the electrical parts so that water cannot enter. Water on electrical parts could cause short-circuits or malfunctions. Do not use water or steam to wash the battery, electronic control components, sensors, connectors or the operator's compartment.

Fuel, lubricant and grease
- Choose fuel, lubricant and grease by following to the "Fuel and lubricant table".
- Use fuels, lubricants and greases which do not contain water, and be careful to keep dirt out when changing or replenishing fuel, lubricant or grease.
- Store fuels, lubricants and greases in the prescribed places and in such a way that no water or dirt can get in them.

Cautions on refueling
- If the port includes a strainer, do not remove the strainer when fueling.
- After fueling, be sure to securely tighten the fuel filler cap.
- Do not add more than the specified amount of fuel.

Do not use fuel to clean parts
Do not use fuel to clean parts. Use a non-combustible cleaning agent.

Keep dirt out
When mounting and removing parts, do so in a place where there is no dust, clean the working area and the part, and keep dirt out.

Clean the installation surfaces

When installing and removing parts, be sure that the surfaces of contact of the parts are clean. If the sealing grooves of the surface of contact are damaged, consult your sales or service dealer for repair or release.

Seals and split pins

- Be sure to replace all seals and cotter pins with new ones.
- When installing, be careful not to damage or twist the seal.

Sealing tape

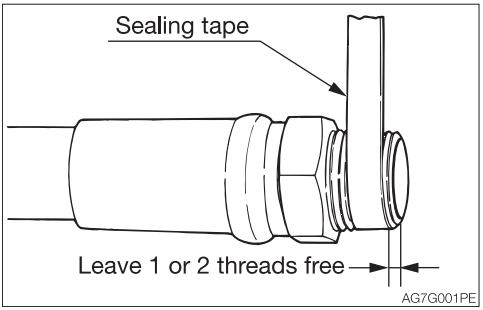

- When wrapping the plug with sealing tape, remove any old sealing tape from the threads and clean the threads.
- Wrap the thread tight with seal tape starting 1 or 2 threads away from the thread end.

Disposing of wastes

- Always collect oil that is drained from the machine in containers. Improperly disposed waste oil can cause environmental harm.
- Follow appropriate laws and regulations when disposing of harmful objects such as oil, fuel, cooling water, coolant, filters and batteries.

Check after maintenance

- Gradually increase the engine speed from a low idle to maximum speed and check that there is no oil or water leaking from serviced parts.
- Operate each control lever and check that the machine is operating properly.

Cautions on handling of battery wiring

- Disconnect the wiring from the both terminals (+ and –) on the battery before working on the electrical system or doing electric welding.
  Always disconnect it from the earth side (–). When connecting, connect the earth side last.
- Do not disconnect the battery wiring while the engine is moving. Otherwise, the electric circuits of the rotary converter or others may be damaged.

SERVICE DATA

FUEL AND LUBRICANT TABLE

Select the appropriate fuel, lubricant and grease according to the temperature by referring to the table below.

- Regardless of the specified time, change the oil if it becomes too dirty or degraded.
- When refilling, never mix oils of different brands. If a brand is to be changed, replace the whole fuel/oil.

Fuel

Diesel fuel specifications

Diesel fuel should comply with the following specifications. The table lists several worldwide specifications for diesel fuels.

Diesel fuel specification	Area	Diesel fuel specification	Area
ASTM D975 No.1-D S15 No.2-D S15	USA Canada	ISO 8217DMX	International
Bio-diesel fuel Biodiesel blends up to B7 ASTM D6751, D7467			
EN590: 2009	European union	BS2869-A1 or A2	United kingdom
Bio-diesel fuel Biodiesel blends up to B7 EN14214, EN590			

Note: Bio-diesel fuel of up to B7 can be used under any conditions. Bio-diesel fuel of B8 to B20 must be used under specific conditions.
Refer to “Conditions for use of bio-diesel fuel (B8 to B20)” on page 8-25.

Precautions when using diesel fuel
- To maintain the performance and service life of the engine, always use clean and high-quality fuel.
- To avoid freezing in cold climates, use a diesel fuel that still functions when the temperature is at least 12°C (21.6°F) below the lowest expected ambient temperature.
- Use a diesel fuel that has a cetane number of 45 or higher. When operating at a very low temperature or at a high altitude, a higher cetane number fuel will be required.
- Use fuel with sulfur content of less than 0.5 % by volume.
  Especially in the U.S.A. and Canada, ultra-low sulfur fuel should be used.
  A higher sulfur content fuel may cause sulfuric acid corrosion in the cylinders of the engines.
- Never mix kerosene, used engine oil, or residual fuel with the diesel fuel. Use of kerosene is prohibited.
- Poor quality fuel can reduce engine performance and / or cause engine damage.
- Fuel additives are not recommended. Some fuel additives may cause poor engine performance.

Precautions when using bio-diesel fuel
The warranty of the engine manufacturer may be voided by using a bio-diesel fuel that does not meet the standard or that is deteriorated.

<Applicable machine models 216027714 or later>
<Applicable machine models 216104025 or later>

Hydrotreated Vegetable Oil (HVO) fuel
HVO fuel compliant with EN15940 can be used.

IMPORTANT: Note that HVO fuel has a lower fuel density than light oil, which may reduce engine power and machine performance.

Precautions when using HVO fuel
Do not use HVO fuel that does not comply with the specified standards. Doing so could result in malfunction.

Lubricant

Location	Type	Type by air temperature -4 14 32 50 68 86 104°F -20 -10 0 10 20 30 40°C	When to replace
Engine oil pan	Diesel engine oil API: CD class ACEA: E-3, E-4 or E-5	SAE 10W-30 SAE 15W-40	Every 250 hrs.
Hydraulic oil tank	Takeuchi genuine hydraulic oil 46	ISO VG46	Every 4000 hrs.***
	Biodegradable oil recommended by Takeuchi**** Mobil EAL Envirosyn 46H Panolin HLP Synth 46	ISO VG46	Every 4000 hrs.
	Anti-wear hydraulic oil	ISO VG32 ISO VG46 ISO VG68	Every 2000 hrs.***
Engine cooling system	Cooling water (water + coolant)** SAE: J814C, J1941, J1034 or J2036 ASTM: D6210 or D4985 (USA) JIS: K-2234 (Japan)	Mixture of 50% coolant Mixture of 30% coolant	Every 2000 hrs. or every two years (whichever comes first)
Travel reduction gear	Gear oil API: GL-4	SAE 90	Every 1000 hrs after the initial 250 hrs*.
Slew motor pinion	Lithium based grease EP-2 NLGI No.2	—	Every 50 hrs.
Slew bearing			Every 50 hrs.
Working equipment			Daily or every 10 hrs.
Levers			When required

* : If the ratio of traveling time to total operating time is high, replace the gear oil earlier than the specified time.
** : For water, use tap water (soft). Do not use well or river water. When the ambient temperature drops below 0°C (32°F), add coolant (antifreeze). Follow the coolant manufacturer's instructions to determine the mixture ratio.
*** : The hydraulic oil replacement interval depends on the type of hydraulic oil being used. New machine are delivered with Takeuchi genuine hydraulic oil 46, and the hydraulic oil replacement intervals indicated in this manual assume that Takeuchi genuine hydraulic oil 46 is being used. When using conventional antiwear hydraulic oil, the hydraulic oil should be replaced every 2000 hours.
**** : When replacing a mineral oil with a biodegradable oil, the residual mineral oil in the machine should be about 2% or less, as complying with the ISO 15380. For details, refer to "Biodegradable oil" on page 8-14.

API standard: American Petroleum Institute
ACEA standard: Association des Constructeurs Européens d'Automobiles
SAE standard: Society of Automotive Engineers

Volume

Engine oil pan	Engine cooling system	Hydraulic oil tank	Fuel tank	Travel reduction gear
Upper limit 2.8 L (3.0 US qt.) Lower limit 1.5 L (1.6 US qt.)	3.8 L (4.0 US qt.)	System 24.5 L (6.5 US gal.) Tank 16.0 L (4.2 US gal.)	Level capacity 22 L (5.8 US gal.)	0.33L X 2 (0.35 US qt.) X 2

Note: After flushing or replacing the hydraulic oil, the oil cleanliness when starting full operation shall be code 20/17/14 or better as specified by ISO.

REGULARLY REPLACE THE HYDRAULIC OIL

When a hydraulic breaker is used, the oil deteriorates more quickly than that used for a usual excavation operation. Be sure to replace the hydraulic oil and the return filter elements.

- Failure to replace these in time can lead to damage to the machine and the breaker hydraulic system. To prolong the service life of the hydraulic devices, properly replace the hydraulic oil and the return filter elements according to the table below.
- When replacing the hydraulic oil, clean the suction strainer.

Replacement interval (hours)

Item	Hydraulic oil	Filter element
1st time	—	25
2nd time	—	100
Periodically	1200 (600)	200

When the breaker operating ratio is 100%. Refer to “Hydraulic breaker” on page 8-6.

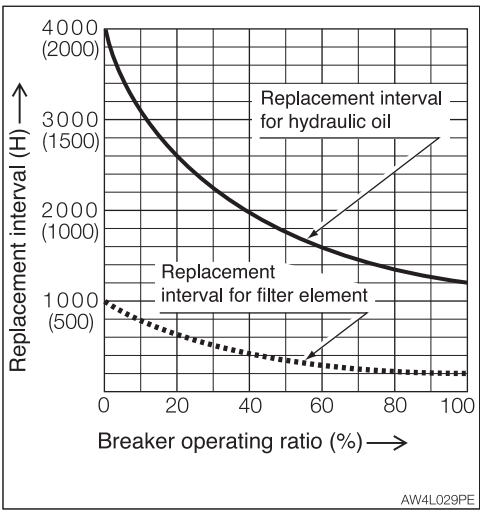

( ): When a conventional antiwear hydraulic oil is used.

HYDRAULIC SYSTEM SPECIFICATIONS

Working pressure range	P1, P2 MAIN: 21.0 MPa (3045.8 psi) P4 Pilot: 3.4 MPa (493.1 psi) See workshop manual for detail. “Service data - Specification table”
Working temperature range	-40 to 100°C (-40 to 212°F)
Type of fluid being used	ISO VG 32 to 68 or equivalent oil. See workshop manual for detail. “Service data - Table of fuel and lubricant”
Working flow-rate range	P1, P2 MAIN: 16.8 L/min (4.4 US gal/min) P4 Pilot: 6.5 L/min (1.7 US gal/min)* 6.0 L/min (1.6 US gal/min)** See workshop manual for detail. “Service data - Specification table”
Lifting provisions	Refer to “Hoisting the machine” on page 4-4.
Emergency, safety and energy isolation requirements	Refer to “Lowering the boom to the ground” on page 6-12.
Painting or protective coating	Painted or plated (each hydraulic components)

*: Applicable machine models 216000002 or later
**: Applicable machine models 216100002 or later

LIST OF CONSUMABLES

Periodically replace consumables such as filters and elements according to the table below.

System	Item	Part name	Part No.	When to replace
Hydraulic system	Hydraulic oil return filter	Element	15511-01300	Every 500 hrs after the initial 50 hrs.
	Air breather (If equipped) Applicable machine models: 216005568 or later Applicable machine models: 216100808 or later		15520-03000	Every 1000 hrs.
Engine lubrication system	Engine oil filter	Cartridge	Y119305-35151	Every 250 hrs.
Fuel system	Water separator filter	Element	Y171081-55910	Every 500 hrs.
	Fuel filter*	Element	Y119810-55650	Every 500 hrs.
		Cartridge	19901-97062	Every 250 hrs.
Air cleaner system	Air cleaner	Primary (Outer) element	Y119655-12560	Every 1000 hrs. or after 6 cleanings (whichever comes first)
		Secondary (Inner) element	19111-01342	When the primary elements are replaced.
Heater system	Filter	Element	03345-00024	Once a year or if clogging remains after cleaning

*: The filter installed differs depending on the region of sale.
Be sure to check the filter type when ordering.
For the element type, refer to “Replacing the fuel filter (element type)” on page 5-41.
For the cartridge type, refer to “Replacing the fuel filter (cartridge type)” on page 5-38.

LIST OF TOOLS (IF EQUIPPED)

Code	Part name	Part No.	Remarks
1	Spanner	19100-47081	10 - 12
2	Spanner	19100-47082	14 - 17
3	Screwdriver	19100-06112	(+) (–) replaceable shank
4	Filter wrench	19100-96081	
5	Monkey wrench	16904-00250	250 mm
6	Pliers	16905-00200	200 mm
7	Spanner	16901-00013	13
8	Spanner	16900-01922	19 - 22
9	Spanner	16909-00026*	26
		16909-00019**	19
10	Tool case	16914-00005	
11	Grease gun	16910-60600	500 cc
12	Drain connector	15545-12201	

*: Applicable machine models 216000002 to 216006755
Applicable machine models 216100002 to 216100951
**: Applicable machine models 216006756 or later
Applicable machine models 216100952 or later

LIST OF TIGHTENING TORQUES

Nuts and Bolts (for ISO strength category 10.9)

Tighten nuts and bolts at the torques shown on the table below, unless otherwise specified.

- The tightening torques used for the mounted plastic covers are not listed in the table below. Consult your sales or service dealer for details. They will be damaged if over tightened.
- When replacing nuts and bolts, replace them with nuts and bolts of the same size and standards.
- Tighten nuts and bolts alternately (top, bottom, left then right) or in 2 or 3 times so that they are evenly tightened.

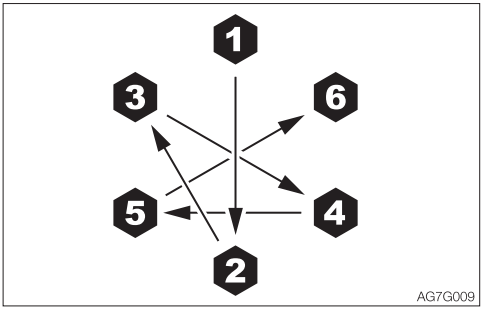

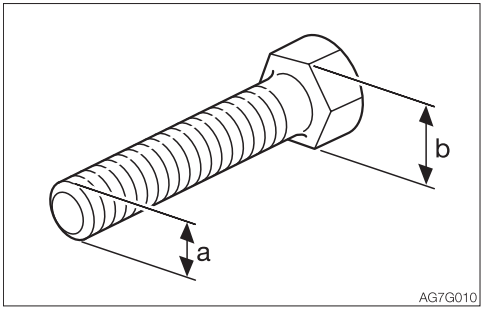

Classification	Head width (b)	Size (a) x pitch	Tightening torque	
			General connection points	
	mm	mm	N·m	ft-lb.
Coarse	10	M6 x 1.0	9.8±0.5	7.2±0.4
	12, 13	M8 x 1.25	22.6±1.1	16.6±0.8
	14, 17	M10 x 1.5	47.1±2.4	34.7±1.7
	17, 19	M12 x 1.75	83.4±4.1	61.5±3.0
	19, 22	M14 x 2.0	134.4±6.7	99.1±4.9
	22, 24	M16 x 2.0	207.9±10.4	153.3±7.7
	27, 30	M20 x 2.5	410.9±20.5	303.1±15.1
Fine	12, 13	M8 x 1.0	24.5±1.2	18.1±0.9
	14, 17	M10 x 1.25	50±2.5	36.9±1.8
	17, 19	M12 x 1.5	87.3±4.3	64.4±3.2
	19, 22	M14 x 1.5	135.3±6.8	99.8±5.0
	22, 24	M16 x 1.5	220.6±11	162.7±8.1
	27, 30	M20 x 1.5	452.1±22.6	333.4±16.6

SAFETY-CRITICAL PARTS

To use the machine safely, periodically perform inspection and maintenance. The safety-critical parts listed below must be periodically replaced for an increased safety.
Serious injury or a fire could result if they are worn or damaged.

List of safety-critical parts

<table>
<tr><th colspan="2">Unit</th><th>Safety-critical parts to be replaced periodically</th><th>When to replace</th></tr>
<tr><td colspan="2" rowspan="2">Fuel system</td><td>Fuel hoses</td><td rowspan="14">Every 2 years</td></tr>
<tr><td>Packing on fuel filler cap</td></tr>
<tr><td colspan="2">Heater</td><td>Heater hoses</td></tr>
<tr><td colspan="2">Cooling system</td><td>Rubber hoses</td></tr>
<tr><td rowspan="12">Hydraulic system</td><td rowspan="4">Main body</td><td>Hydraulic hoses (pump - delivery)</td></tr>
<tr><td>Hydraulic hoses (pump - suction)</td></tr>
<tr><td>Hydraulic hoses (slew motor)</td></tr>
<tr><td>Hydraulic hoses (travel motor)</td></tr>
<tr><td rowspan="8">Working equipment</td><td>Hydraulic hoses (boom cylinder piping)</td></tr>
<tr><td>Hydraulic hoses (arm cylinder piping)</td></tr>
<tr><td>Hydraulic hoses (bucket cylinder piping)</td></tr>
<tr><td>Hydraulic hoses (swing cylinder)</td></tr>
<tr><td>Hydraulic hoses (blade cylinder)</td></tr>
<tr><td>Hydraulic hoses (span cylinder)</td></tr>
<tr><td>Hydraulic hoses (pilot valve)</td></tr>
<tr><td>Hydraulic hoses (auxiliary piping)</td></tr>
<tr><td colspan="2" rowspan="2"></td><td>Seat belt</td><td rowspan="2">Every 3 years</td></tr>
<tr><td>Non-slip sheet</td></tr>
</table>

The material of the safety-critical part listed above tends to change over time and cause wear or deterioration. It is difficult to determine the degree of deterioration at the periodic inspection, and thus they need to be replaced with new ones after a certain time to maintain their proper performance even if they appear in good condition. Note that regardless of the replacement schedule, replacement must be performed immediately if a symptom of wear is found. If a hose clamp is deformed or cracked, replace it together with the hose immediately. When replacing the safety-critical parts, ask your sales or service dealer.
In addition to the safety-critical parts, inspect the hydraulic hoses and retighten or replace as necessary. When replacing the hydraulic hoses, replace the O-rings and seals at the same time.
Check the fuel and hydraulic hoses according to the periodic schedule described below. Refer to “Maintenance”.

Type of inspection	Inspection item
Daily inspection	Leakage from the connecting parts of hydraulic or fuel hoses Damage to cab or canopy - replace*
Monthly inspection	Leakage from the connecting parts of hydraulic or fuel hoses Damaged hydraulic or fuel hoses (cracks, wear and tear)
Annual inspection	Leakage from the connecting parts of hydraulic or fuel hoses Deteriorated, twisted, damaged hydraulic or fuel hoses (cracks, wear and tear) or hoses in contact with other parts of the machine

<Applicable machine models 216000002 or later>
<Applicable machine models 216100472 or later>
*: Cab parts No. 03386-00101
*: Canopy parts No.(3) 03384-00135
*: Canopy parts No.(4) 03684-16300

<Applicable machine models 216100002 ~ 216100471>
*: Canopy parts No.(1) 03384-00120
*: Canopy parts No.(2) 03384-00128

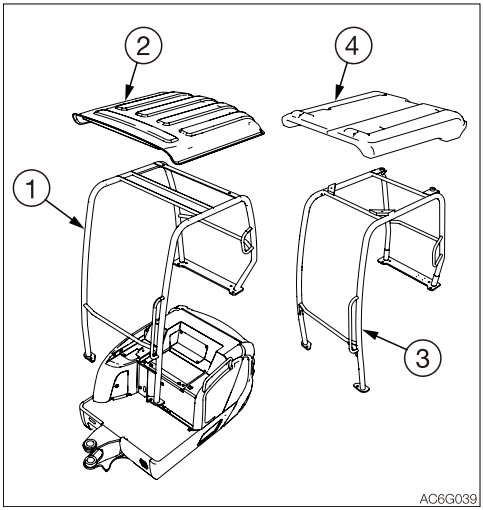

MAINTENANCE LIST

Inspection and maintenance item	Page
Walk-around inspection	
Inspecting by opening the engine hood and covers	5-16
Inspecting by walking around the machine	5-17
Inspecting while sitting in the operator's seat	5-17
Daily inspection (every 10 hours)	
Inspecting and replenishing the coolant	5-18
Inspecting and replenishing the engine oil	5-19
Inspecting the dust indicator	5-19
Inspecting the water separator	5-20
Inspecting the fuel level	5-20
Inspecting the hydraulic oil tank level and replenishing	5-21
Lubricating the working equipment	5-23
After the initial 50 hours (only for new machines)	
Inspecting and adjusting the fan belt	5-25
Replacing the hydraulic oil return filter	5-26
Every 50 hours	
Inspecting and adjusting the crawler tension	5-28
Lubricating the slew bearing	5-30
Lubricating the slew motor pinion	5-30
Draining the water from the fuel tank	5-31
Inspecting the battery fluid level and replenishing	5-32
Every 100 hours	
Cleaning the water separator	5-33
Cleaning the fuel filter	5-33
After the initial 250 hours (only for new machines)	
Replacing the travel motor gear oil*	5-34
Every 250 hours	
Inspecting and adjusting the fan belt	5-35
Replacing the engine oil and the oil filter	5-35
Cleaning the air cleaner	5-36
Inspecting the throttle control system	5-37
Cleaning the radiator fins and the oil cooler fins	5-38
Replacing the fuel filter (cartridge type)	5-38
Cleaning the air filters	5-39

*: If the percentage of the traveling time within the total operating time is high, replace the gear oil earlier than the specified time.

Inspection and maintenance item	Page
Every 500 hours	
Replacing the hydraulic oil return filter	5-40
Replacing the water separator filter	5-40
Replacing the fuel filter (element type)	5-41
Every 1000 hours	
Replacing the travel motor gear oil*	5-42
Replacing the air cleaner element	5-42
Replacing the air breather (If equipped)	5-43
Inspecting and adjusting the engine valve clearance	5-43
Every 1500 hours	
Inspecting and cleaning the engine fuel injectors	5-44
Inspecting the crankcase breather system	5-44
Every 2000 hours	
Cleaning the engine cooling system	5-45
Lapping the engine valve seats	5-46
Inspecting the accumulator (If equipped)	5-46
Every 4000 hours	
Replacing the hydraulic oil and cleaning the suction strainer	5-48
When required	
Replacing the bucket teeth	5-50
Replacing the bucket	5-52
Lubricating the levers and pedals	5-54
Inspecting the rubber crawlers	5-55
Replacing the rubber crawlers	5-56
Inspecting and replenishing the windshield washer fluid	5-57

*: If the percentage of the traveling time within the total operating time is high, replace the gear oil earlier than the specified time.

WALK-AROUND INSPECTION

Perform the following inspections every day before starting the engine for the first time.

⚠ WARNING

- **Before operating, perform the walk-around inspections and make repairs immediately where necessary.**
- **Be sure to secure the engine hood or cover before working the inside. Do not keep the hood or cover open on a windy day or if the machine is parked on a slope.**

Before starting the engine, look around the machine and clean any combustibles from the surroundings of the engine. Also, inspect if oil or water is leaking and any nuts, bolts or electric wiring are loosened or damaged.

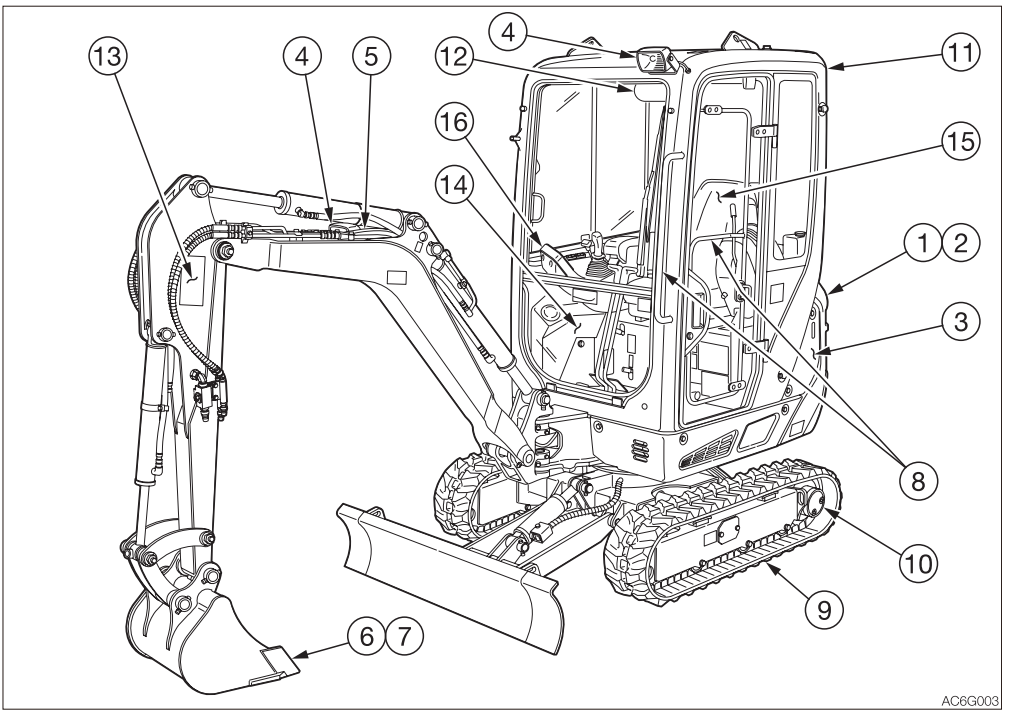

INSPECTING BY OPENING THE ENGINE HOOD AND COVERS

1. Check for any twigs, leaves, oil or other combustible materials around the engine and battery.
2. Check for oil or engine coolant water leakage around the engine.
3. Check for oil leakage from the hydraulic oil tank, hydraulic devices, hoses or connections.

INSPECTING BY WALKING AROUND THE MACHINE

4. Check lights for dirt, damage and burnt out bulbs.
5. Check attachments and hoses for damage.
6. Check the bucket, bucket teeth and side cutter for wear, damage and looseness.
7. Check the hook, slip stopper and hook mount of buckets with hooks for damage. (Option)
8. Check the handrail, the steps and the slip-resistant surfaces for damage and loose bolts.
9. Check the crawlers, shoe slides, track rollers, idlers and sprockets for damage, wear and loose bolts.
10. Check for oil leakage from the travel motor.
11. Check the canopy/cab and guard for damage and the nuts and bolts for looseness.
12. Check the rearview mirror and the interior rearview mirror for dirt or damage, and adjust them if necessary.
13. Check the labels for dirt and damage.

INSPECTING WHILE SITTING IN THE OPERATOR'S SEAT

14. Check the windshield for dirt or damage.
15. Check the seat and seat belt for dirt or damage.
    Check the operator's seat for dirt, oil or other combustible materials.
16. Check the monitor, instruments and switches for dirt or damage.

DAILY INSPECTION (EVERY 10 HOURS)

Perform the following inspections every day before starting the engine for the first time.

⚠ WARNING

- **Before operating, perform the daily inspections and make repairs immediately where necessary.**
- **Be sure to secure the engine hood or cover before working the inside. Do not keep the hood or cover open on a windy day or if the machine is parked on a slope.**

INSPECTING AND REPLENISHING THE COOLANT

⚠ WARNING

- **Do not remove the radiator cap or the drain plug when the cooling water is hot. Stop the engine and wait until the engine and the radiator cool before slowly loosening the radiator cap and the drain plug to remove them.**
- **Always wear the protective goggle and gloves when handling coolant (antifreeze). If any coolant (antifreeze) comes in contact with eyes or skin, wash it off with clean water. Otherwise, it could result in injures.**

Inspection

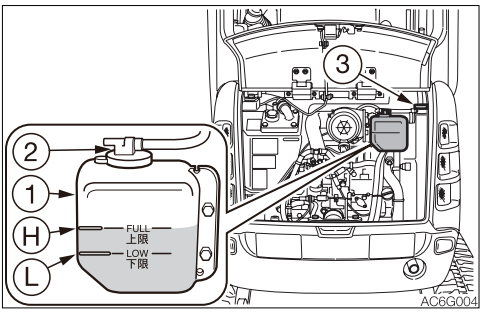

1. Open the engine hood.
2. Inspect the cooling water level in the reserve tank (1).
   The level should be between the upper limit (H) and the lower limit (L).
   If it is below the lower limit (L), replenish.

Replenishing

1. Remove the cap (2) of the reserve tank (1).
2. Add cooling water up to the upper limit (H) of the reserve tank (1).
   If the reserve tank (1) is found empty at the inspection, check for water leakage and then the water level in the radiator (3). Add water to the radiator (3) as required, and then to the reserve tank (1).
3. Install the cap (2).

Note: Use only clean water (soft water) to replenish the cooling water loss due to evaporation. Use coolant (antifreeze) and clean water (soft water) of the specified mixing ratio to replenish the cooling water loss due to leaking.

INSPECTING AND REPLENISHING THE ENGINE OIL

⚠ WARNING

Stop the engine and allow the machine to cool down before performing maintenance.

Inspection

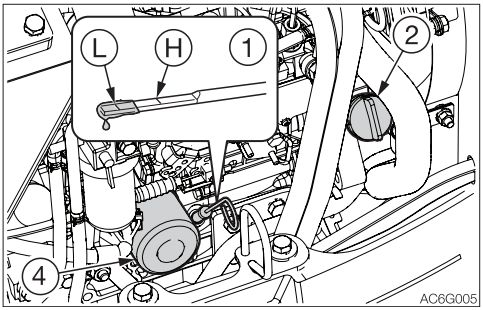

1. Open the engine hood.
2. Take out the dipstick (1) and wipe the oil off with a rag.
3. Fully reinsert the dipstick (1), and then pull it back out.
4. Check the oil on the dipstick (1).
   The level should be between the upper limit (H) and the lower limit (L).
   If it is below the lower limit (L), replenish.

Replenishing

1. Remove the oil filler cap (2).
2. Add oil up to between the upper limit (H) and the lower limit (L) of the dipstick (1).
   Problems could arise if the oil level is either too low or too high.
3. Tighten the oil filler cap (2).
4. Start the engine, run it at low idle for about 5 minutes, then stop it.
5. After about 10 minutes, inspect the oil level.

INSPECTING THE DUST INDICATOR

⚠ WARNING

Stop the engine and allow the machine to cool down before performing maintenance.

The dust indicator is the equipment to be used to find out if there is clogging in the air cleaner.

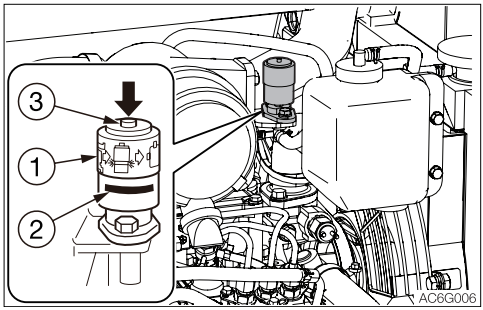

1. Open the maintenance cover A.
2. Check that if the red piston (2) is shown in the dust indicator (1).
3. If the red piston (2) is visible, immediately clean or replace the element.
   Refer to “Cleaning the air cleaner” on page 5-36.
4. After cleaning/replacement, push the button (3) on the dust indicator to reset the red piston (2).

INSPECTING THE WATER SEPARATOR

⚠ WARNING

- Do not smoke or permit open flames while handling fuel or working on the fuel system.
- Stop the engine in a well-ventilated place and allow it to cool down before performing maintenance.
- Clean up spilled fuel immediately.

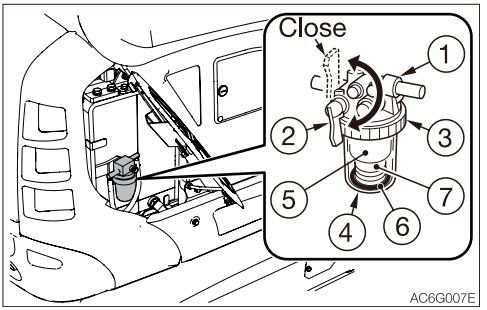

1. Open the engine hood.
2. Inspect the water separator (1).
   If the red indicator ring (6) is sunk to the bottom of case (4), no water is mixed in.
   If the red indicator ring (6) is floating, there is water up to the ring. Drain the water and clean.
   Refer to “Cleaning the water separator” on page 5-33.
   Refer to “Bleeding air from the fuel system” on page 6-8.

INSPECTING THE FUEL LEVEL

⚠ WARNING

- Do not smoke or permit open flames while handling fuel or working on the fuel system.
- Never remove the fuel cap or add fuel when the engine is running or still hot. Do not spill fuel on the hot surface of the machine.
- Fill the fuel tank in a well ventilated place.
- Clean up spilled fuel immediately.
- Do not fill the fuel tank to capacity. Allow room for oil expansion.
- Securely tighten the fuel filler cap.
- Use the correct grade of fuel for the operating season.

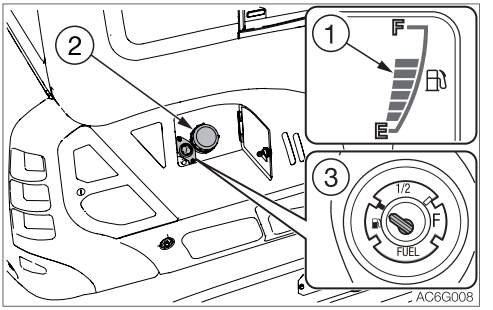

1. Check the fuel level using the fuel gauge (1).
   F: Tank is full.
   E: Tank is empty.
2. If the fuel level is low, open the fuel lid.
3. Add fuel from the fuel filler port (2) while watching the sight gauge (3).
   Use this gauge (3) to check the full state when adding fuel. For checking the remaining amount, use the gauge in the instrument cluster.
   Refer to “Fuel filler port” on page 2-8.

INSPECTING THE HYDRAULIC OIL TANK LEVEL AND REPLENISHING

⚠ WARNING

Oil may spurt out if caps or filters are removed or pipes are disconnected before releasing the pressure in the hydraulic system.

- **Gradually loosen the vent plug to relieve tank pressure.**

Inspection

The oil level changes with the oil temperature. Inspect the oil by maintaining the machine at posture shown in the figure at the next.

- Machine posture for inspecting the hydraulic oil level

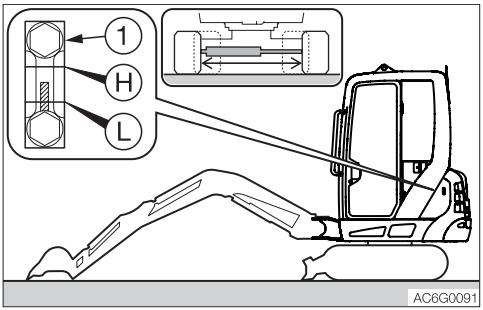

1. Start the engine and run it at low speed.
2. Fully extend the crawler width.
3. Fully retract the cylinders (arm and bucket), and lower the bucket to the ground.
4. Lower the dozer blade, and then stop the engine.
5. Inspect the oil level using the sight gauge (1).
   - When the oil temperature is about 20°C (68°F):
     The level should be between the upper limit (H) and the lower limit (L).
     If it is below the lower limit (L), replenish.
   - When the oil temperature is about 50 to 80°C (122 to 176°F):
     The level should be slightly below the upper limit (H).

Replenishing

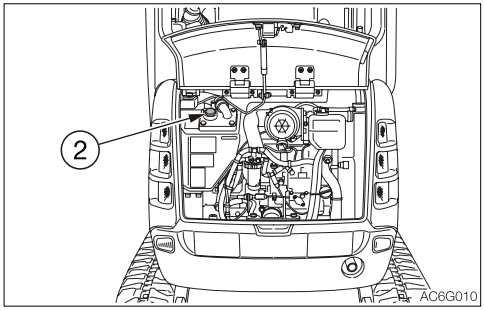

IMPORTANT: Do not fill up to the level higher than the upper limit (H). It will damage the hydraulic circuits or result in oil spurting. If accidentally done, stop the engine and wait the hydraulic oil to cool, and then let the excessive oil to drain from the drain plug.
IMPORTANT: Do not forget to apply pressure to the hydraulic oil tank to avoid damage to the pump caused by air sucking. (If not equipped with the air breather)

1. Open the engine hood.
2. Slowly loosen the air bleeding plug (2) to relieve the internal pressure, and then remove it.
3. Add the hydraulic oil up to the middle of the sight gauge (1).
4. Pressurize the hydraulic oil tank as follows.

Note: For a machine equipped with the air breather, no pressurization is necessary.

Pressurizing the hydraulic oil tank
(If not equipped with the air breather)

1. Start the engine and run it at low speed.
2. With the vent plug (2) removed, set the safety lock levers to the released position.
   · Hydraulic oil tank pressurization posture

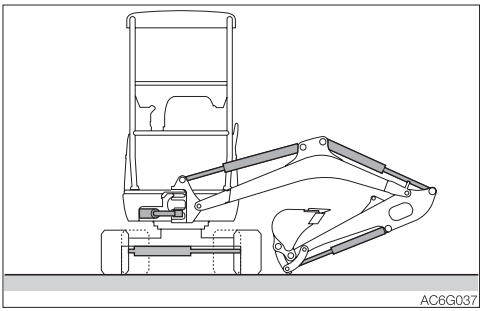

3. Fully extend the bucket, arm, boom, swing and span cylinders.
4. Stop the engine and raise the left safety lock lever to engage the lock.
5. Tighten the vent plug (2), and then pressurize by retracting the cylinders.

LUBRICATING THE WORKING EQUIPMENT

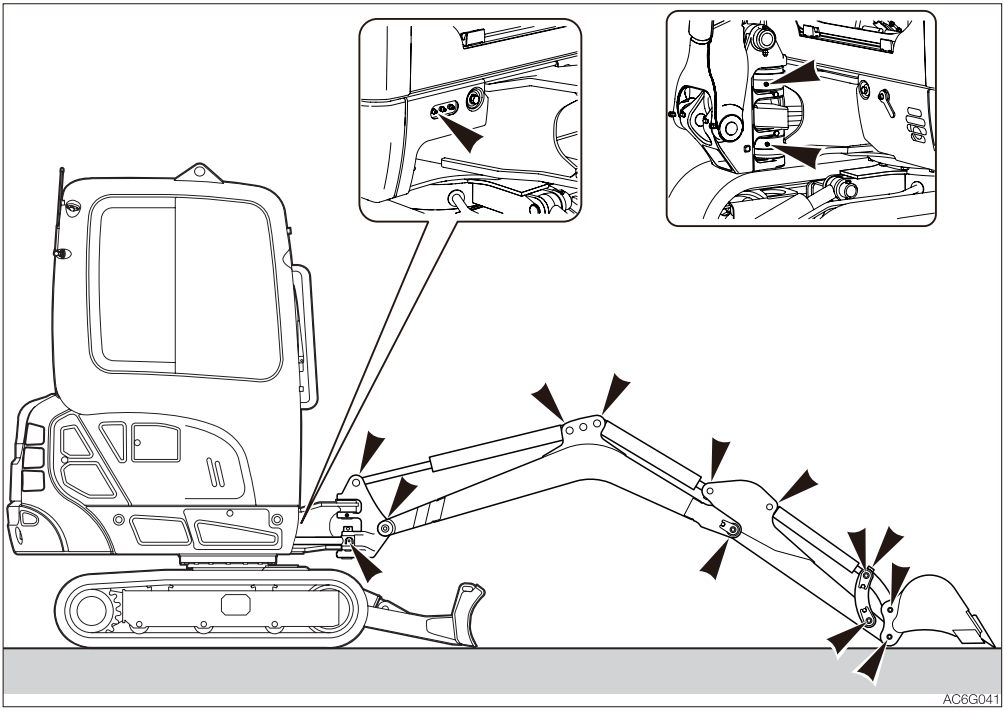

1. Keep the machine configuration as shown in the diagram above, lower the working equipment to the ground, and then stop the engine.
2. Use the grease gun to lubricate the grease fittings.
3. Wipe off the excess grease.

Note: It is not necessary to lubricate the dozer blade, as it is using a “self-lubrication bush”.

MEMO

AFTER THE INITIAL 50 HOURS (ONLY FOR NEW MACHINES)

INSPECTING AND ADJUSTING THE FAN BELT

⚠ WARNING

Stop the engine and allow the machine to cool down before performing maintenance.

- **The engine, muffler, radiator, hydraulic lines, sliding parts and many other parts of the machine are hot immediately after the engine is stopped. Touching these parts will cause burns.**

IMPORTANT: The loose belts could result in bad battery charge, overheat of engine or early wear of belt. Too tight belts could damage the water pump or bearing and belt used to drive the alternator.
IMPORTANT: Do not let any oil or grease get on the belt.

Inspection

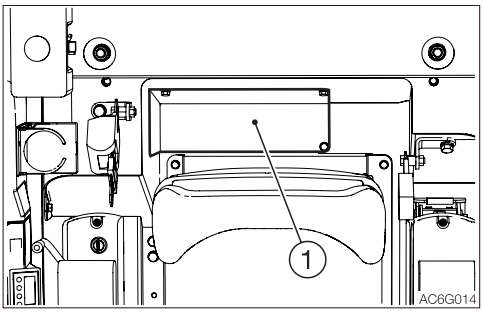

1. Move the sheet all the way forward.
2. Take out three bolts and remove the cover (1).

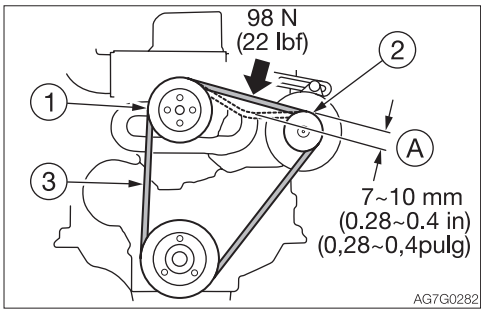

3. Press at the center of the fan pulley (1) and alternator pulley (2) to check the tension (approx. 98 N or 22 lbf).
   The slack (A) should be 7 to 10 mm (0.28 to 0.4 in).
4. Inspect the fan belt (3) and replace if it is as follows.
   · There are cuts or cracks.
   · The belt is worn and touches the bottom of the V groove in the pulley.
   · The belt stretched too loose to be adjusted.

Adjustment

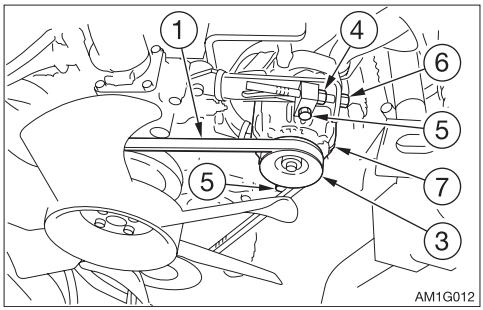

1. Loosen the bolt (5) and locking nut (4).
2. Turn the adjustment bolt (6) to move the alternator (7) and to adjust the tension of the fan belt (1).
   · Tighten: Clockwise
   · Loosen: Counterclockwise
3. Tighten the bolt (5) and locking nut (4).

Note: When replacing with a new belt, run the engine at low idle speed for about 3 to 5 minutes to break in the new belt, before adjusting the tension.

REPLACING THE HYDRAULIC OIL RETURN FILTER

⚠ WARNING

- Stop the engine and allow the machine to cool down before performing maintenance.
  - The engine and the hydraulic system and many other parts of the machine are hot immediately after the engine is stopped. Touching these parts will cause burns.
  - The hydraulic oil is also hot and under high pressure.
    Be careful not to touch the hydraulic oil when loosening the cap or plug. Working on the machine under these conditions could result in burns or injuries due to the hot oil spurting out.
- Oil may spurt out if caps or filters are removed or pipes are disconnected before releasing the pressure in the hydraulic system.
  - Gradually loosen the vent plug to relieve tank pressure.
  - When removing plugs or screws, or when disconnecting hoses, stand to the side and loosen them slowly to gradually release the internal pressure before removing.

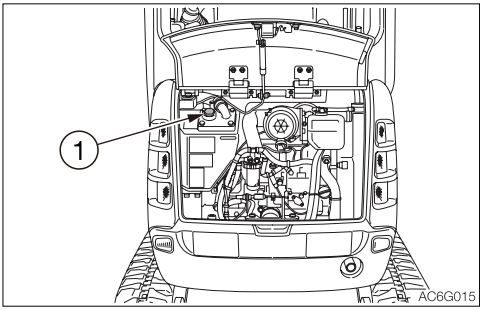

1. Open the engine hood.
2. Slowly loosen the air bleeding plug (1) to relieve the internal pressure, and then remove the plug.

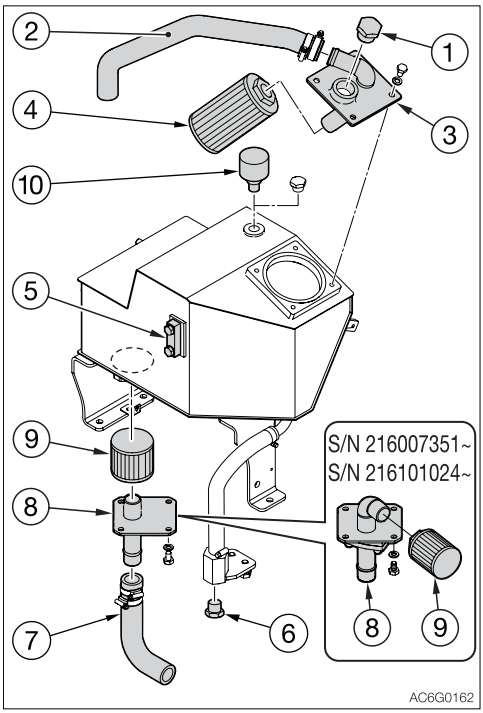

3. Loosen the hose bands and remove the hose (2) from the flange (3).
4. Loosen the bolts to take out the flange (3).
5. Remove the return filter (4).
6. Install a new return filter.
7. Reinstall the flange (3) and the hose (2).
8. Inspect the level with the sight gauge (5), and replenish if the level is too low.
   Refer to “Inspecting the hydraulic oil tank level and replenishing” on page 5-21.
9. Pressurize the hydraulic oil tank.
   (If not equipped with the air breather)
   Refer to “Pressurizing the hydraulic oil tank” on page 5-22.

Note: For a machine equipped with the air breather, no pressurization is necessary.

EVERY 50 HOURS

INSPECTING AND ADJUSTING THE CRAWLER TENSION

⚠ WARNING

- If you must work beneath the raised machine or working equipment, always use wood blocks, jack-stands or other rigid and stable supports. Never get under the machine or working equipment if they are not sufficiently supported. This procedure is especially important when working on hydraulic cylinders.
- Be careful with the high-pressure grease In the track adjuster, the grease has been injected under high pressure. If the tension is adjusted without following the prescribed procedure, the grease discharge valve may fly off, resulting in injury.
  - Never loosen the grease fitting.
  - Loosen the grease discharge valve slowly. Do not turn it more than one turns.
  - Do not put your face, arms, legs or body in front of the grease discharge valve.
  - If grease does not come out when the grease discharge valve is loosened, the valve is faulty. Ask a Takeuchi service agent for repair.

Inspection

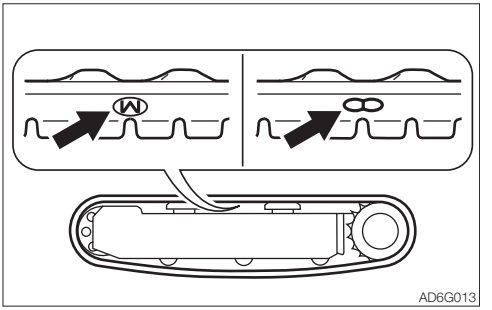

1. For rubber crawlers, move the machine so that the “M” or “∞” mark at the joint is at the top center of the crawler frame.

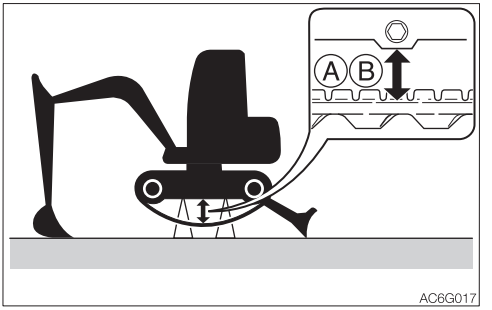

2. Use the working equipment to lift the machine body. Operate the levers slowly.

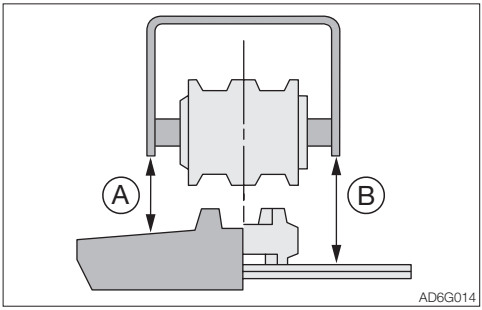

3. Inspect the gap (A or B) between the bottom surface of the frame at the center of the crawler frame and the top surface of the crawler.
   The gap (A or B) must be within the following range:

   (A) Rubber crawler
   59 to 64 mm (2.3 to 2.5 in.)
   (B) Steel crawler
   95 to 110 mm (3.7 to 4.3 in.)

Adjustment

Increasing the tension

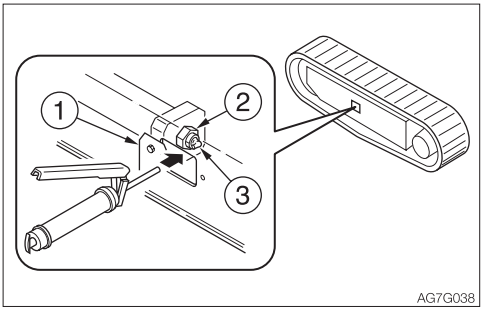

1. Remove the cover (1).
2. Inject grease through the grease fitting (3) of the grease discharge valve (2) with a grease gun.
3. Inspect the crawler tension.

Decreasing the tension

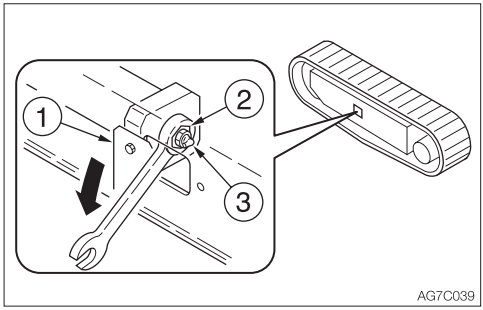

1. Remove the cover (1).
2. Slowly loosen (one turn) the grease discharge valve (2) with a spanner to discharge grease. If grease does not come out well, move the machine back-and-forth.
3. Tighten the grease discharge valve (2).

   <Applicable machine models 216000002 to 216006755>
   <Applicable machine models 216100002 to 216100951>
   · Tightening torque: 177 N·m (130.5 ft-lb.)

   <Applicable machine models 216006756 or later>
   <Applicable machine models 216100952 or later>
   · Tightening torque: 59 to 88 N·m (43.5 to 64.9 ft-lb)

LUBRICATING THE SLEW BEARING

⚠ WARNING

Do not slew while lubricating. Doing so is dangerous, as you may get caught in the machine.

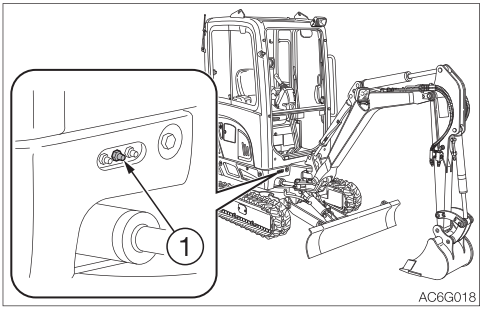

1. Stop the engine with the machine in the posture shown on the figure above.
2. Use the grease gun to grease the grease fitting (1).

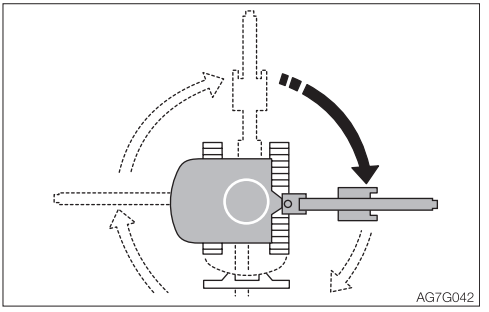

3. Start the engine, lift the bucket and slew clockwise 90°.
4. Lower the bucket to the ground, and then stop the engine.
5. Repeat the steps 2 to 4 above three times.
6. Wipe off the grease expelled from the slew bearing and grease fitting.

LUBRICATING THE SLEW MOTOR PINION

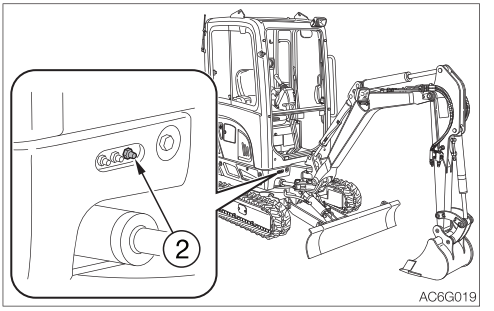

1. Use the grease gun to lubricate the grease fitting (2).
2. Wipe off the excess grease.

DRAINING THE WATER FROM THE FUEL TANK

⚠ WARNING

- **Do not smoke or permit open flames while handling fuel or working on the fuel system.**
- **Never remove the fuel cap or add fuel when the engine is running or still hot. Do not spill fuel on the hot surface of the machine.**
- **Fill the fuel tank in a well ventilated place.**
- **Do not fill the fuel tank to capacity. Allow room for oil expansion.**
- **Clean up spilled fuel immediately.**
- **Securely tighten the fuel filler cap.**
- **Use the correct grade of fuel for the operating season.**

Do the draining operation before starting the machine.

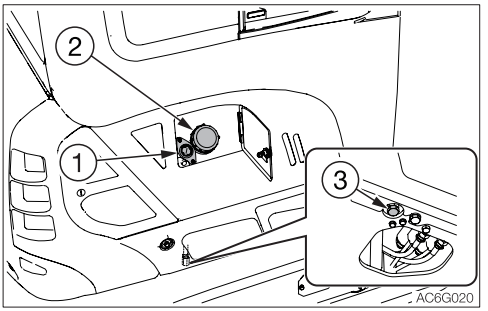

1. Slew the upperstructure to the position for easy draining.
2. Remove the fuel filler cap (2).
3. Place a pan under the drain plug (3).
4. Loosen the drain plug (3) to drain water and sediment buildup in the bottom of the tank.
5. Tighten the drain plug (3).
6. Add fuel while watching the sight gauge (1).
7. Tighten the fuel filler cap (2) and lock it.
8. Bleed air.

Bleeding air from the fuel system

Refer to “Bleeding air from the fuel system” on page 6-8.

Note: Air in the fuel system causes the engine to fail to start or to have problems. Bleed air when the fuel tank is emptied, using the same procedure above.

INSPECTING THE BATTERY FLUID LEVEL AND REPLENISHING

⚠ DANGER

- Do not use the battery when the fluid level is below the lower level limit. Doing so will hasten the deterioration of the internal portions of the battery and shorten the battery life. It also can cause rupturing (explosion).
- Batteries generate flammable hydrogen gas which may explode. Keep away from flame, sparks, fire or lighted cigarettes.
- Use a dampened cloth to clean above the fluid level line and check the fluid level. Do not clean with a dry cloth; otherwise it can cause static electricity to build up, resulting in ignition or explosion.

⚠ WARNING

- Wear protective goggle and clothing when working with batteries.
- Do not add the distilled water above the upper level limit. Doing so could cause the fluid to leak. This fluid can cause skin damage if contacted, or can cause the machine components to corrode.
- Batteries contain sulfuric acid which will damage eyes or skin if contacted.
  - If eye contact occurs, flush immediately with clean water and get prompt medical attention.
  - If accidentally swallowed, drink large quantities of water or milk and call a physician immediately.
  - If acid contacts skin or clothing, wash off immediately with a lot of water.

Inspection

1. Open the maintenance cover.

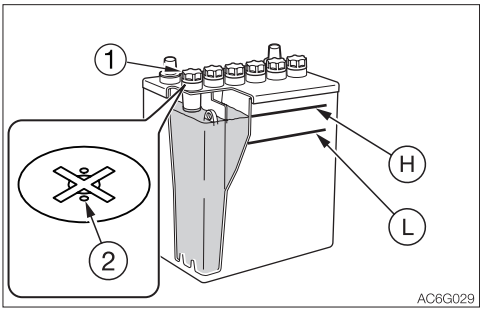

2. Inspect the fluid level.
   The fluid level must be between the upper level line (H) and lower level line (L). If not, add distilled water up to the line (H).
3. Check the terminals for looseness and dirt.

Replenishing

When adding distilled water, do so before starting operations in order to prevent freezing.

1. Remove the caps (1), and add distilled water until the upper level (H).
2. Clean the exhaust holes (2) on the cap, then tighten the caps (1) securely.

EVERY 100 HOURS

CLEANING THE WATER SEPARATOR

⚠ WARNING

- **Do not smoke or permit open flames while handling fuel or working on the fuel system.**
- **Stop the engine in a well-ventilated place and allow it to cool down before performing maintenance.**
- **Clean up spilled fuel immediately.**

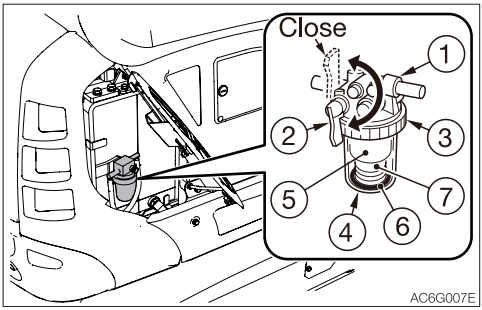

1. Open the side cover.
2. Close the valve (2).
3. Loosen the ring (3), and then remove and clean the case (4), element (5) indicator ring (6) and spring (7).
4. Inspect the O-ring and the element (5). If there are any scratches or other irregularities, replace them.
5. Install the indicator ring (6), spring (7), element (5) and case (4), and then tighten the ring (3).
6. Open the valve (2) to bleed air.
   Refer to “Bleeding air from the fuel system” on page 6-8.

CLEANING THE FUEL FILTER

⚠ WARNING

- **Do not smoke or permit open flames while handling fuel or working on the fuel system.**
- **Stop the engine in a well-ventilated place and allow it to cool down before performing maintenance.**
- **Clean up spilled fuel immediately.**

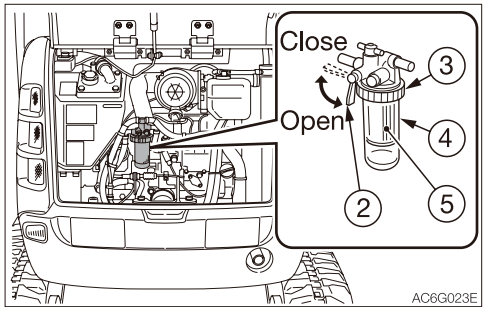

1. Open the engine hood.
2. Close the valve (2).
3. Loosen the ring (3), remove and clean the case (4) and the element (5).
4. Inspect the O-ring and the element (5). If there are any scratches or other irregularities, replace them.
5. Install the element (5) and the case (4) and tighten them with the ring (3).
6. Open the valve (2) to bleed air.
   Refer to “Bleeding air from the fuel system” on page 6-8.

AFTER THE INITIAL 250 HOURS (ONLY FOR NEW MACHINES)

REPLACING THE TRAVEL MOTOR GEAR OIL

⚠ WARNING

- Stop the engine and allow the machine to cool down before performing maintenance.
  - The travel motor is hot immediately after the engine is stopped. Touching it will cause burns.
  - The gear oil is also hot and under high pressure immediately after the engine is stopped.
    Be careful when loosening the plugs. Working on the machine under these conditions could result in burns or injuries.
- The pressure in the reduction gear case of travel motor may cause oil or the plug to fly out. Loosen the plug slowly to release the pressure.

IMPORTANT: If the percentage of the traveling time within the total operating time is high, replace the gear oil earlier than the specified time.

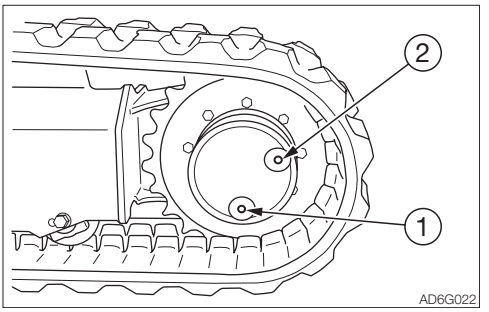

1. Set the travel motor so that plug (1) is at the very bottom.
2. Place a pan under the plug (1).
3. Remove the plugs (1) and (2) and drain the oil.
4. Rewrap the plugs with new sealing tape.
5. Tighten the plug (1).
6. Add oil through the hole of the plug (2) until oil flows out of the hole of the plug (2).
7. Tighten the plug (2).

EVERY 250 HOURS

INSPECTING AND ADJUSTING THE FAN BELT

Refer to “Inspecting and adjusting the fan belt” on page 5-25.

REPLACING THE ENGINE OIL AND THE OIL FILTER

⚠ WARNING

Stop the engine and allow the machine to cool down before performing maintenance.

- **The engine, muffler, radiator, hydraulic lines, sliding parts and many other parts of the machine are hot immediately after the engine is stopped. Touching these parts will cause burns.**
- **The engine oil is also hot. Be careful not to touch the hydraulic oil when loosening the cap or plug. Working on the machine under these conditions could result in burns or injuries.**

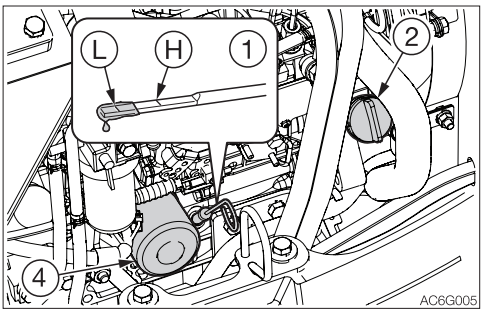

1. Open the engine hood and remove the oil filler cap (2).

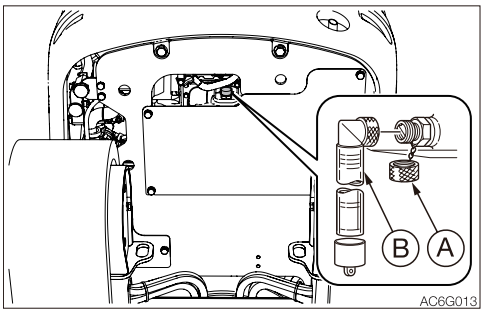

2. Place a pan for catching the waste oil under the drain plug (3).
3. Remove the cap (A), install connector (B) and drain the oil. (The oil comes out when the screw is tightened.)
4. Remove the connector (B) and install the cap (A).

IMPORTANT: Check the waste oil for metal powder. If it contains large amounts of metal powder, consult your sales or service dealer.

5. Turn the filter (4) counterclockwise with the filter wrench and remove it.
6. Clean the surface of installation of the filter stand.
7. Apply a thin layer of oil on the packing of the new filter.
8. Install the new filter by hand.
9. Tighten one more turn (with the filter wrench) after the filter packing comes in contact with the surface of installation. (Torque when tightening with filter wrench: 19.6 to 23.5 N·m or14 to 17 ft-lb)
10. Add oil up to between the upper limit (H) and the lower limit (L) of the dipstick (1). Problems could arise if the oil level is either too low or too high.
11. Tighten the oil filler cap (2).
12. Start the engine, run it at low idle for about 5 minutes, then stop it.
13. After about 10 minutes, inspect the oil level.

CLEANING THE AIR CLEANER

⚠ WARNING

- **Stop the engine and allow the machine to cool down before performing maintenance.**
  - **The engine, muffler, radiator and many other parts of the machine are hot immediately after the engine is stopped. Touching it will cause burns.**
- **Wear required appropriate equipment such as protective goggle and filter mask when using compressed air, as metal fragments or other objects can fly and cause serious injury.**

IMPORTANT: Be careful not to scratch the element. Do not use an element if it is damaged.
IMPORTANT: When operating the machine in very dusty places, perform inspection and maintenance operations every day.
IMPORTANT: Be sure to install the element and dust cap securely. If not, dust could be drawn into the cylinder, damaging the engine.

1. Open the engine hood.

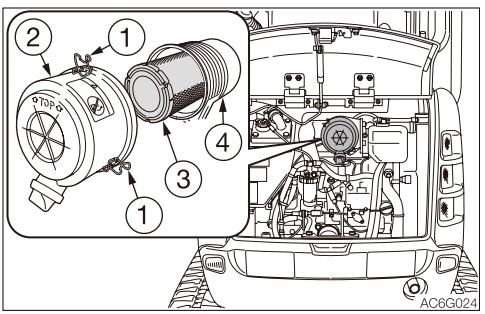

2. Loosen the clamps (1) and remove the dust cup (2).

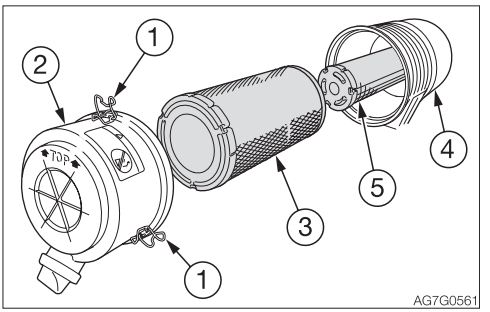

3. Clean the inside of the dust cup (2).
4. Remove the primary element (3).
5. Cover the intake hole at the back of the body (4) with cloth or tape to prevent dirt from getting in.
   <If equipped with the secondary element>
   To prevent dirt from getting inside the engine, do not remove the secondary element (5).
6. Clean the inside of the body (4).

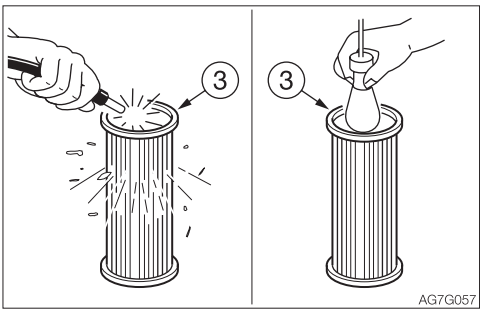

7. Clean the primary element (3) with dried compressed air (294 to 490 kPa or 43 to 71 psi).
   First blow the air from the inside of the element along the pleats. Then blow the air from the outside and finally from the inside again.
8. Light up the inside of the primary element (3) with a light bulb, inspect it, and replace it if there are small holes or thin spots.
9. Remove the cloth or tape applied in step 5.
10. Install the primary element (3).
11. Install the dust cup (2) with its "⬆ TOP ⬆" mark facing up, and then fasten it with the clamps (1).

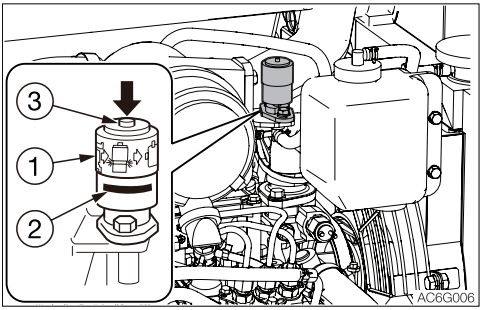

12. Push the button (3) on the dust indicator to reset the red piston (2).

INSPECTING THE THROTTLE CONTROL SYSTEM

The throttle lever and the governor on the engine side are connected with wiring. Check for stretch in the wire and looseness of it at the fixing portion.
If the wire is stretched or loosened at the fixing portion, malfunction could result.
The operation of wire replacement or adjustment requires experience. Ask your sales or service dealer for it.

CLEANING THE RADIATOR FINS AND THE OIL COOLER FINS

⚠ WARNING

Wear required appropriate equipment such as protective goggle and filter mask when using compressed air, as metal fragments or other objects can fly and cause serious injury.

IMPORTANT: Be careful not to damage the fins when cleaning.

- **When using compressed air or pressurized water, make sure the pressure is no higher than 200 kPa (28 psi) and hold the nozzle sufficiently away from the fins.**

IMPORTANT: When using water, cover the electrical system to prevent water from getting in.

IMPORTANT: When operating the machine in very dusty places, perform inspection and maintenance operations every day.

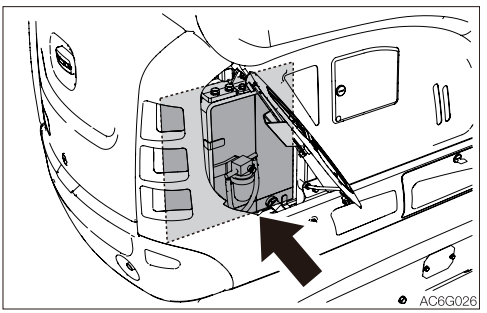

1. Open the side cover.
2. Blow compressed air on the fins to remove mud and dirt stuck on them.

REPLACING THE FUEL FILTER (CARTRIDGE TYPE)

⚠ WARNING

- **Do not smoke or permit open flames while handling fuel or working on the fuel system.**
- **Stop the engine in a well-ventilated place and allow it to cool down before performing maintenance.**
- **Clean up spilled fuel immediately.**

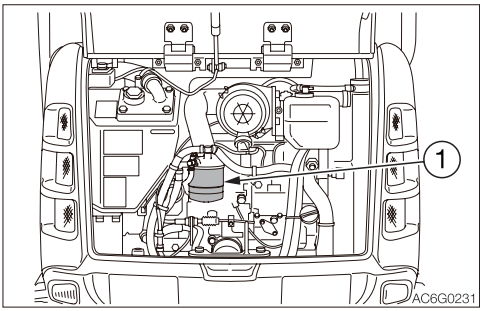

1. Open the engine hood.
2. Turn the filter (1) counterclockwise with the filter wrench and remove it.
3. Clean the surface of installation of the filter stand.
4. Apply a thin layer of oil on the packing of the new filter.
5. Install the new filter by hand.
6. Tighten one more turn after the filter packing comes in contact with the surface of installation. (Torque when tightening with filter wrench: 20 to 24 N·m or 15 to 18 ft-lb.)
7. Bleed the air.
   Refer to “Bleeding air from the fuel system” on page 6-8.

CLEANING THE AIR FILTERS

⚠ WARNING

Wear required appropriate equipment such as protective goggle and filter mask when using compressed air, as metal fragments or other objects can fly and cause serious injury.

Clean the filters immediately after operating in dusty places.
If the filters are clogged, the air flow is reduced and a booming sound is heard from the air conditioner unit.

Removing the filters

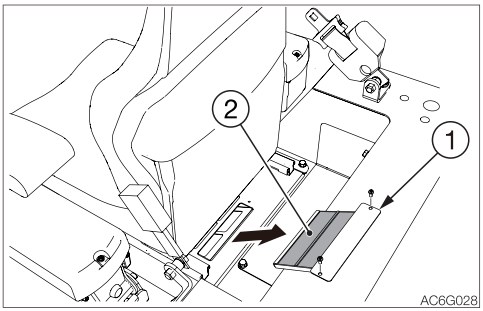

1. Move the sheet all the way forward.
2. Take out two screws and open the cover (1).
3. Remove the air filter (2).
   Air filter (2): Part No. 03345-00024
4. Use compressed air or water to clean each filter, depending on how dirty it is.

Cleaning

1. Blow dry, compressed air (138 kPa or 20 psi or less) directly on the filters from the inside, moving up and down along the pleats.
   Be sure to keep the nozzle at an adequate distance from the filters.
2. Wash the filter with neutral detergent if it is very dirty. Dry the filter completely after washing it.

Replacing

Replace the filter with a new one once a year or if it is still clogged after blow-drying with compressed air and washing.

EVERY 500 HOURS

REPLACING THE HYDRAULIC OIL RETURN FILTER

Refer to “Replacing the hydraulic oil return filter” on page 5-26.

REPLACING THE WATER SEPARATOR FILTER

⚠ WARNING

- **Do not smoke or permit open flames while handling fuel or working on the fuel system.**
- **Stop the engine in a well-ventilated place and allow it to cool down before performing maintenance.**
- **Clean up spilled fuel immediately.**

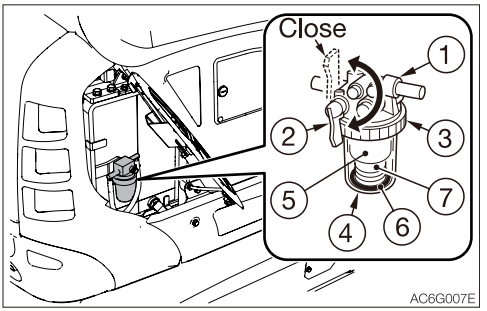

1. Open the side cover.
2. Close the valve (2).
3. Loosen the ring (3) and remove the case (4).
4. Remove the spring (7) and the indicator ring (6) from the case (4).
5. Clean the case (4).
6. Inspect the O-ring. If there are any scratches or other irregularities, replace it.
7. Replace the element (5) with a new one.
8. Install the indicator ring (6) and the spring (7) in the case (4).
9. Install the case (4) to the bracket and tighten the ring (3) by hand.
10. Open the valve (2) to bleed air. Refer to “Bleeding air from the fuel system” on page 6-8.

REPLACING THE FUEL FILTER (ELEMENT TYPE)

⚠ WARNING

- **Do not smoke or permit open flames while handling fuel or working on the fuel system.**
- **Stop the engine in a well-ventilated place and allow it to cool down before performing maintenance.**
- **Clean up spilled fuel immediately.**

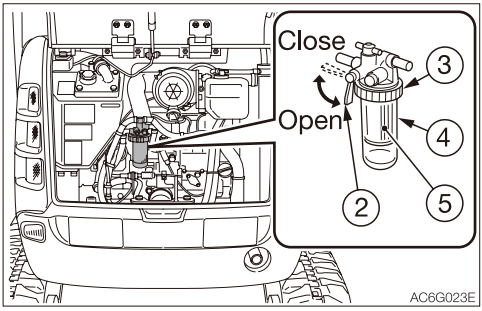

1. Open the engine hood.
2. Close the valve (2).
3. Loosen the ring (3) and remove the case (4).
4. Clean the case (4).
5. Inspect the O-ring. If there are any scratches or other irregularities, replace it.
6. Replace the element (5) with a new one.
7. Install the case (4) to the bracket and tighten the ring (3) by hand.
8. Open the valve (2) to bleed air.
   Refer to “Bleeding air from the fuel system” on page 6-8.

EVERY 1000 HOURS

REPLACING THE TRAVEL MOTOR GEAR OIL

Refer to “Replacing the travel motor gear oil” on page 5-34.

REPLACING THE AIR CLEANER ELEMENT

⚠ WARNING

Stop the engine and allow the machine to cool down before performing maintenance.

- **The engine, muffler, radiator and many other parts of the machine are hot immediately after the engine is stopped. Touching these parts will cause burns.**

IMPORTANT: Do not use an element if its pleats, gaskets or seals are damaged.
IMPORTANT: Be sure to install the element and dust cap securely. If not, dust could be drain into the cylinder, damaging the engine.

1. Open the engine hood.

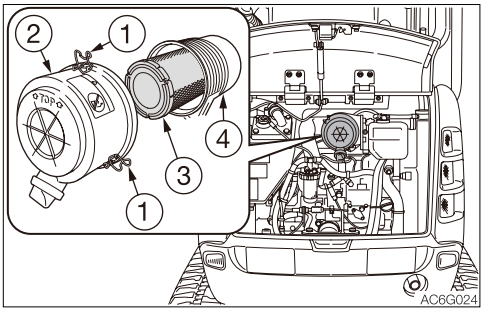

2. Loosen the clamps (1) and remove the dust cup (2).
3. Clean the inside of the dust cup (2).

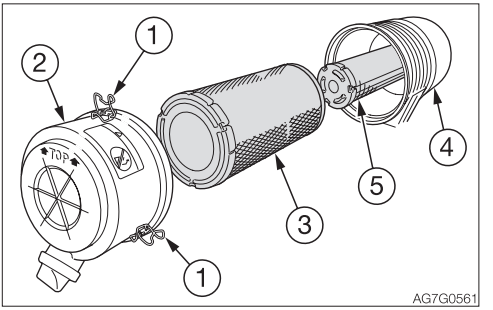

4. Remove the primary element (3).
5. Cover the intake hole at the back of the body (4) with cloth or tape to prevent dirt from getting in.
   <If equipped with the secondary element>
   Do not yet remove the secondary element (5).
6. Clean the inside of the body (4).
7. Remove the cloth or tape applied in step 5.
   <If equipped with the secondary element>
   Remove the secondary element (5).
8. Install the new elements.
9. Install the dust cup (2) with its “⬆ TOP ⬆” mark facing up, and then fasten it with the clamps (1).

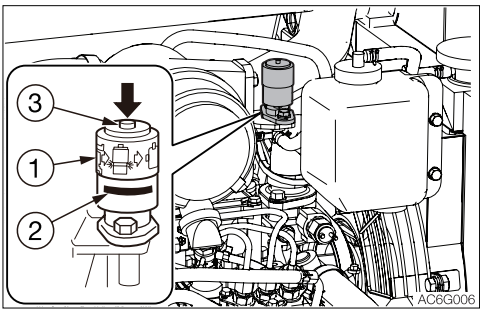

10. Push the button (3) on the dust indicator to reset the red piston (2).

REPLACING THE AIR BREATHER (IF EQUIPPED)

⚠ WARNING

Oil may spurt out if caps or filters are removed or pipes are disconnected before releasing the pressure in the hydraulic system.

- **Gradually loosen the vent plug to relieve tank pressure.**

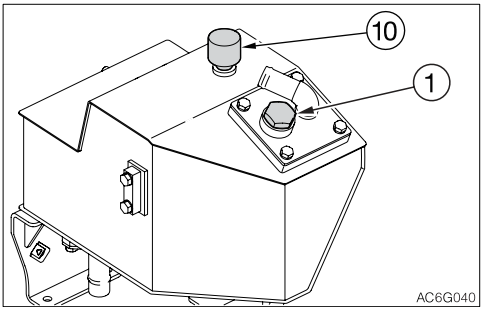

1. Open the engine hood.
2. Slowly loosen the air bleeding plug (1) to relieve the internal pressure, and then remove the plug.
3. Turn the air breather (10) counterclockwise by hand or with the wrench and remove it.
4. Apply a thin layer of oil on the packing of the new air breather.
5. Install the new air breather by hand.
   · Tightening torque: Max. 5 N·m

Note: For a machine equipped with the air breather, no pressurization is necessary.

INSPECTING AND ADJUSTING THE ENGINE VALVE CLEARANCE

This operation requires experience. Ask your service dealer for it.

EVERY 1500 HOURS

INSPECTING AND CLEANING THE ENGINE FUEL INJECTORS

This operation requires experience. Ask your sales or service dealer for it.

INSPECTING THE CRANKCASE BREATHER SYSTEM

This operation requires experience. Ask your sales or service dealer for it.

EVERY 2000 HOURS

CLEANING THE ENGINE COOLING SYSTEM

⚠ WARNING

- **Stop the engine and allow the machine to cool down before performing maintenance.**
  - **The engine, muffler, radiator and many other parts of the machine are hot immediately after the engine is stopped. Touching these parts will cause burns.**
  - **The engine coolant is also hot and under high pressure immediately after the engine is stopped. Be careful when loosening the caps or plugs. Working on the machine under these conditions could result in burns or injuries due to the hot coolant spurting out.**
- **If maintenance must be performed with the engine running, always work as a two person team communicating each other.**
  - **One person must sit in the operator's seat so that he/she can immediately stop the engine when necessary. He/she must take care not to touch the lever or pedal unless necessary.**
  - **The one who performs maintenance must make sure to keep his/her body or clothing away from the moving part of the machine.**
- **Standing at the back of the machine while the engine is running is extremely dangerous, as the machine could move suddenly. Never stand at the back of the machine while the engine is running.**
- **Do not remove the radiator cap or the drain plug when the cooling water is hot. Stop the engine and wait until the engine and the cooling water cool. Then, slowly loosen the radiator cap and the drain plug to remove them.**

When cleaning, if the temperature of the coolant is low, the thermostat will be closed and the coolant will not circulate in the radiator. Heat the coolant water to at least 90°C (194°F) before cleaning.

1. Open the engine hood.

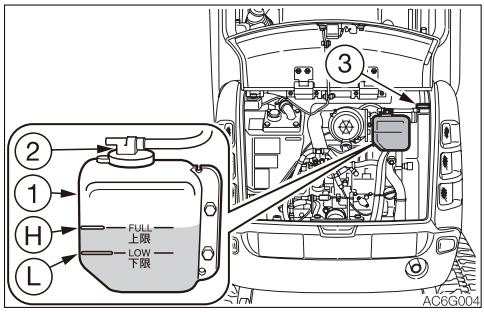

2. Gradually loosen the radiator cap (3) to release the internal pressure, and then remove the cap.

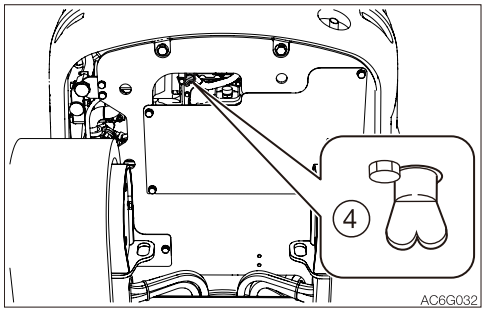

3. Place a pan for catching the waste coolant under the drain plug (4), and then loosen the drain plug (4) to drain the coolant.
4. Tighten the drain plug (4).
5. Add tap water to the radiator through the coolant fill port up to the top of the port. Take time and slowly add water, so that no air enters the radiator.
6. Close the radiator cap (3).
7. Start the engine and run it at a speed slightly above low idling. Raise the water temperature to at least 90°C (194°F), and then run the engine for about 10 minutes with the thermostat open.
8. Stop the engine, wait until the cooling water temperature becomes lower, and then remove the drain plug (4) to drain the water.

9. After draining, clean the cooling system using a cleaning agent. When using the cleaning agent, follow the instructions included with the agent.
10. Repeat the steps 4 to 8 to rinse the cooling system.
11. Tighten the drain plug (4).
12. Take time and slowly add the new coolant (mixture of antifreeze and tap water) to the radiator through the fill port until it is full.
13. Close the radiator cap (3).
14. Warm up the engine. Use the meters to check that there are no irregularities in the cooling system at this time.
15. Increase the water temperature to at least 90°C (194°F). Then, run the engine for about 10 minutes with the thermostat kept open.
16. Stop the engine, wait until the cooling water temperature becomes lower, and then check the level of coolant in the radiator.
    If necessary, add cooling water until the radiator is full.
17. Close the radiator cap (3).
18. Clean the interior of the reserve tank (1), and then add coolant to the upper limit (H).
19. When the coolant has been replaced, inspect the coolant level once again after operating the machine.
    Once the machine is operated, the coolant is distributed throughout the entire system, resulting in the lower coolant level.
    Replenish the cooling water that has been used.

LAPPING THE ENGINE VALVE SEATS

This operation requires experience. Ask your sales or service dealer for it.

INSPECTING THE ACCUMULATOR (IF EQUIPPED)

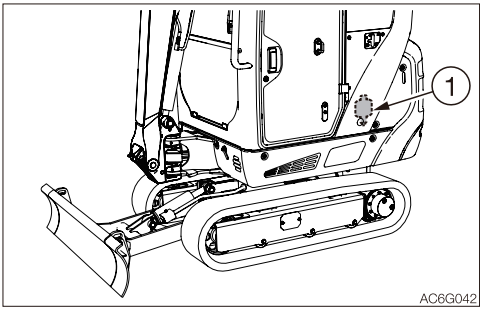

⚠ WARNING

- **High-pressure nitrogen gas is enclosed in the accumulator (1). If handled incorrectly, it could explode and cause serious injury. Strictly observe the following precautions:**
  - **Do not disassemble.**
  - **Do not allow flame nearby or throw it into a fire.**
  - **Do not drill, weld or fuse.**
  - **Do not subject it to physical shock such as hitting, rolling or dropping.**
  - **Before disposing of the unit, the sealed gas must be drained. Contact a Takeuchi sales or service dealer for help.**
- **Clear all personnel from the work area.**
- **Sound the horn to warn people around the machine.**

IMPORTANT: If the accumulator (1) fails, the boom cannot be lowered or the residual pressure in the hydraulic circuit cannot be released while the engine is stopped.

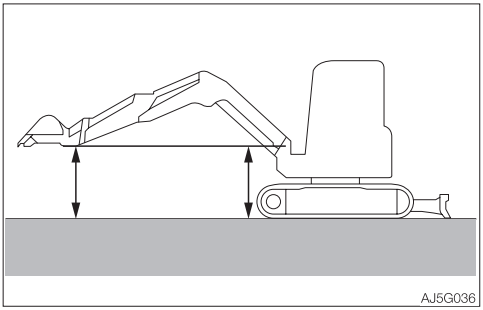

1. Start the engine, then fully retract the arm and bucket cylinders.
2. Operate the boom so that the tip of the arm is positioned at the bottom of the boom.

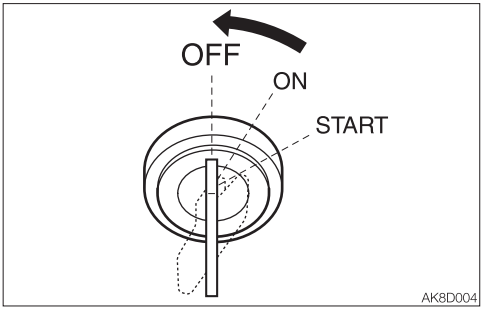

3. Turn the starter key to the OFF position to stop the engine.

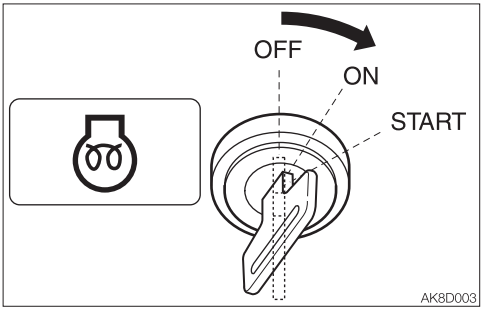

4. Turn the key to the ON position. (Do not start the engine.)

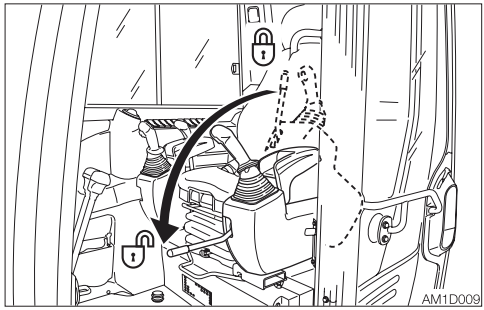

5. Fully lower the safety lock lever to disengage the lock.

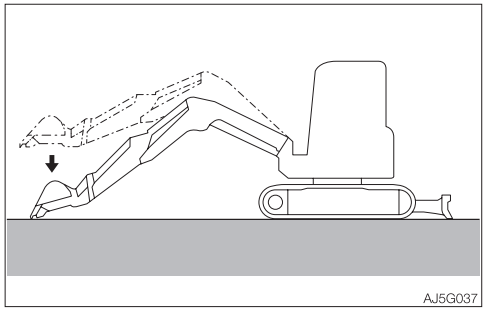

6. Lower the boom until the bucket contacts the ground.
   The machine is normal if the bucket is lowered to the ground. The accumulator (1) is probably faulty if the boom cannot be lowered or stops halfway. Consult a Takeuchi sales or service dealer for help.

Note: When the boom is lowered to lower the bucket to the ground, do it within 10 minutes of stopping the engine.

EVERY 4000 HOURS

REPLACING THE HYDRAULIC OIL AND CLEANING THE SUCTION STRAINER

⚠ WARNING

- **Stop the engine and allow the machine to cool down before performing maintenance.**
  - **The engine and the hydraulic system and many other parts of the machine are hot immediately after the engine is stopped. Touching these parts will cause burns.**
  - **The hydraulic oil is also hot and under high pressure immediately after the engine is stopped.**
    Be careful when loosening the caps or plugs. Working on the machine under these conditions could result in burns or injuries due to the hot oil spurting out.
- **Oil may spurt out if caps or filters are removed or pipes are disconnected before releasing the pressure in the hydraulic system.**
  - **Gradually loosen the vent plug to relieve tank pressure.**
  - **When removing plugs or screws, or when disconnecting hoses, stand to the side and loosen them slowly to gradually release the internal pressure before removing.**

1. Set the machine to the hydraulic oil level inspection posture.
   Refer to “Inspecting the hydraulic oil tank level and replenishing” on page 5-21.
2. Raise the safety lock lever to the locked position.

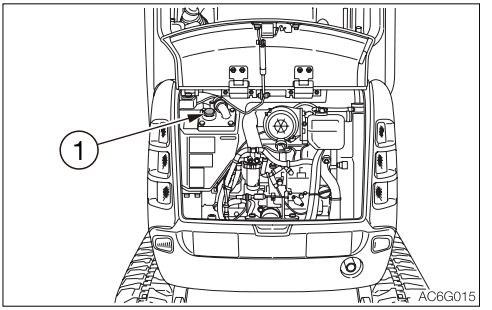

3. Open the engine hood.
4. Slowly loosen the air bleeding plug (1) to relieve the internal pressure, and then remove the plug.

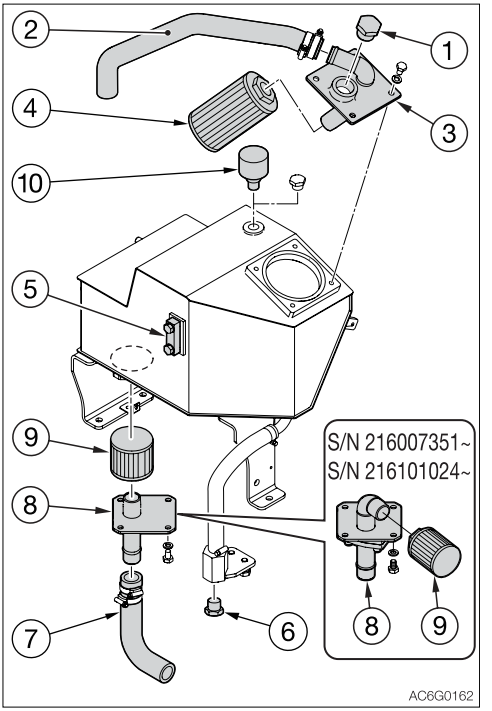

5. Loosen the hose bands and remove the hose (2) from the flange (3).
6. Place a pan for catching the waste oil under the drain plug (6).
7. Loosen the drain plug (6) and drain the hydraulic oil.
8. Loosen the bolts to take out the flange (3).
9. Remove the return filter (4).

10. Loosen the hose bands and remove the hose (7).
11. Loosen the bolts and remove the flange (8).
12. Remove the suction strainer (9) and clean it.
13. Clean the inside of the hydraulic oil tank.
14. Replace the air breather (10) (If equipped). Refer to “Replacing the air breather (If equipped)” on page 5-43.
15. Install the suction strainer (9) to the flange (8).
16. Reinstall the flange (8) and the hose (7) to their original positions.
17. Install a new return filter to the flange (3).
18. Reinstall the flange (3) to their original positions.
19. Tighten the drain plug (6).
20. Add hydraulic oil from the hole of plug (1) up to the level between the upper limit (H) and the lower limit (L) in the sight gauge (5).
21. Pressurize the hydraulic oil tank. (If not equipped with the air breather) Refer to “Pressurizing the hydraulic oil tank” on page 5-22.
22. Tighten the plug (1).
23. Bleed air from the hydraulic oil circuit following “Bleeding air” below.
24. Set the machine to the hydraulic oil level inspection posture and inspect the oil level when the oil temperature drops. Refer to “Inspecting the hydraulic oil tank level and replenishing” on page 5-21.

Note: For a machine equipped with the air breather, no pressurization is necessary.

Bleeding air

IMPORTANT: After replacing the hydraulic oil or hydraulic devices, or after performing maintenance of the hydraulic devices, bleed air from the hydraulic circuits and hydraulic devices. Failure to do so may damage the hydraulic devices.

• Hydraulic pump

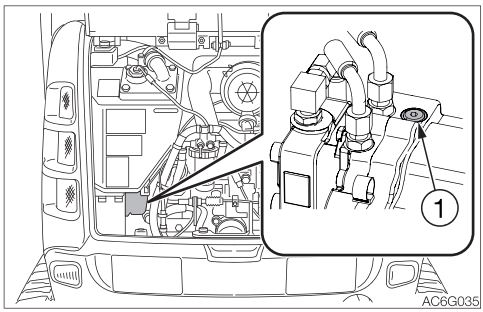

1. Open the engine hood.
2. Loosen the vent plug (1) on the hydraulic pump.
3. Once hydraulic oil overflows from the vent plug hole (1), tighten the vent plug (1).

• Cylinders

1. Start the engine, let it run at a low-idling speed for 10 minutes.
2. Maintain the engine at low idle, then extend and retract each cylinder 4 or 5 times, without let them reach the stroke end.
3. Run the engine at high speed, then extend and retract each cylinder 4 or 5 times, without let them reach the stroke end.
4. Set the engine back to a low idle, then extend and contract all the cylinders 4 or 5 times to the stroke ends.

WHEN REQUIRED

REPLACING THE BUCKET TEETH

Replace the bucket teeth if the tooth points are worn. Do not wait until the bucket is damaged.

⚠ WARNING

- **Before performing maintenance or repairs under the machine, lower all moveable working equipment to the ground or in the lowermost position.**
- **To prevent unexpected movement, firmly secure the working equipment when repairing or replacing the bucket teeth or side cutter.**
- **When using a hammer, pins may fly out or metal particles may be scattered. This may lead to serious injury.**
  - **If hard metal parts such as pins, bucket teeth, side cutter or bearings are hit with a hammer, wear protective gear such as safety goggles and gloves.**
  - **When hitting pins or bucket teeth, always check that there is no one in the surrounding area.**
- **Do not allow unauthorized personnel in the work area while working.**

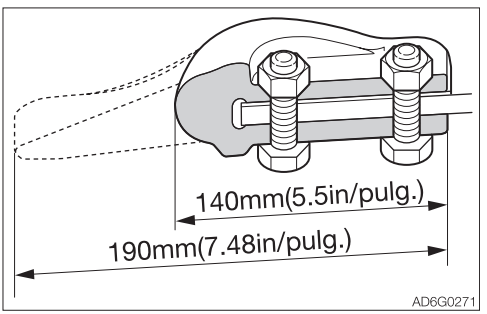

Replace the teeth if they are worn to 140 mm (5.5 in.).

Removal

1. Clean the bucket and park the machine in a flat, safe place where the ground is hard.
2. Set the bottom surface of the bucket flat and lower it on a block so that the bolt (1) can be taken out.
3. Remove the starter key, and then check that the bucket is stable.

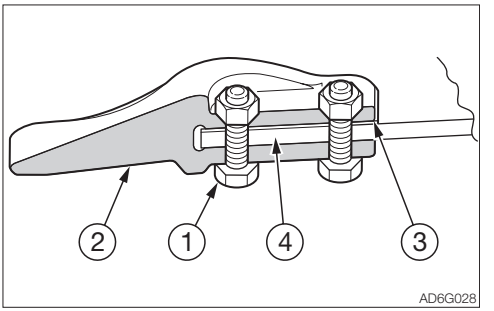

4. Remove the bolt (1).
5. Remove the teeth (2) and the shim (3).

Installation

1. Clean the section where the teeth are to be installed. If there is gravel or mud on the section, the tooth point may not go in all the way.
2. Put the teeth into the bucket.
3. If the teeth are not secured, insert a shim to reduce the clearance.
4. Insert the bolt from the outside of the bucket and tighten it with the nut.
   · Tightening torque: 102 N·m (75.2 ft-lb)

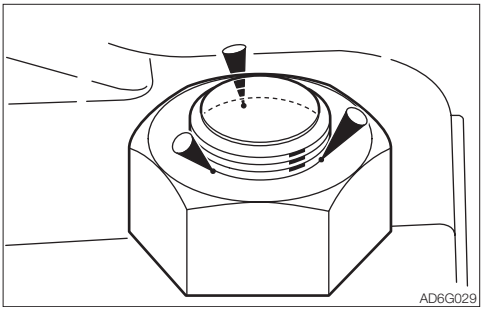

5. Caulk the bolt with a punch or weld it at three spots on the threaded portion (nut side).

REPLACING THE BUCKET

⚠ WARNING

- **Before performing maintenance or repairs under the machine, lower all working equipment to the ground or in the lowermost position.**
- **If maintenance must be performed with the engine running, always work as a two person team communicating each other.**
  - **One person must sit in the operator's seat so that he/she can immediately stop the engine when necessary. He/she must take care not to touch the lever or pedal unless necessary.**
  - **The one who performs maintenance must make sure to keep his/her body or clothing away from the moving part of the machine.**
- **When using a hammer, pins may fly out or metal particles may be scattered. This may lead to serious injury.**
  - **If hard metal parts such as pins, bucket teeth, side cutter or bearings are hit with a hammer, wear protective gear such as safety goggles and gloves.**
  - **When hitting pins or bucket teeth, always check that there is no one in the surrounding area.**
- **When aligning the pin holes, always do so by checking them visually. Do not insert your finger in the pin hole, or you could lose your finger.**

Removing

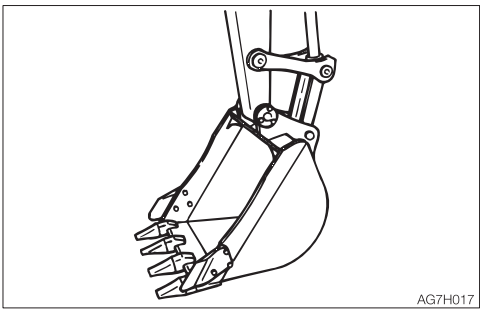

1. Lower the bucket to the ground as shown on the figure above in a stable position.

Note: When removing pins, set the bucket so that it is barely touching the ground. If the bucket is firmly touching the ground, the resistance will be great and it will be difficult to remove the pin.

2. Set the safety lock lever to the locked position and stop the engine.

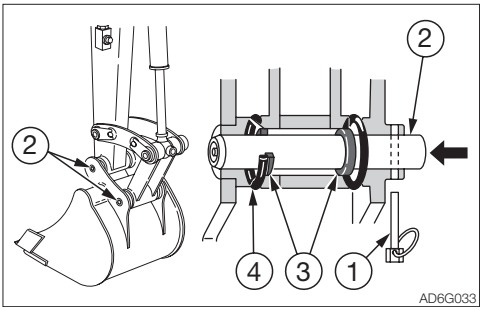

3. Disengage the ring of the lock pin (1) and remove the lock pin (1).
4. Hammer the pin (2) out of the bucket.
5. Remove the bucket.
   Inspect the pin seal (3) and replace it if it is deformed or damaged. (See next page.)

Installation

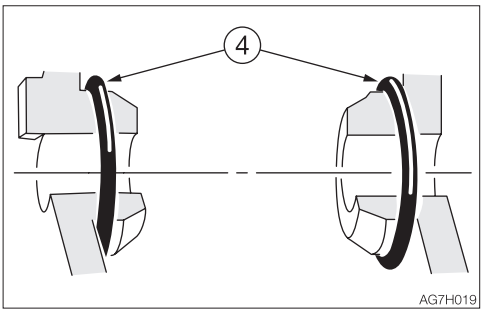

1. Set the O-ring (4) on the bucket as shown on the figure above.

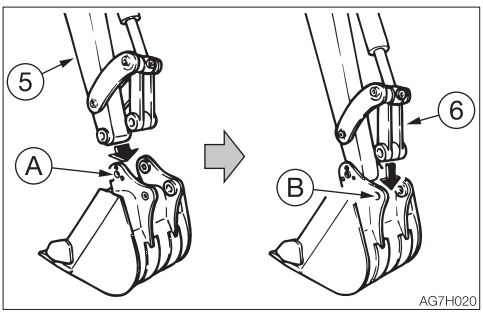

2. Align the pin hole (A) on the bucket with the pin hole on the arm (5), and install the pin (2).
3. Operate the cylinder, align the pin hole (B) on the bucket with the pin hole on the link arm (6), and install the pin (2).

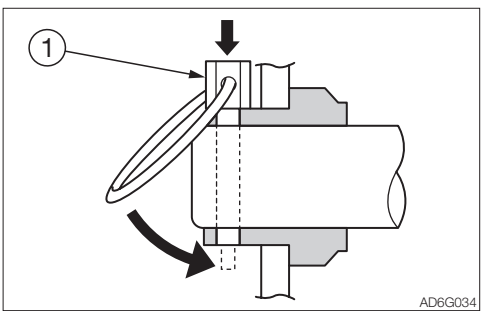

4. Align the turn prevention holes, install the lock pin (1), and then engage the ring inside.

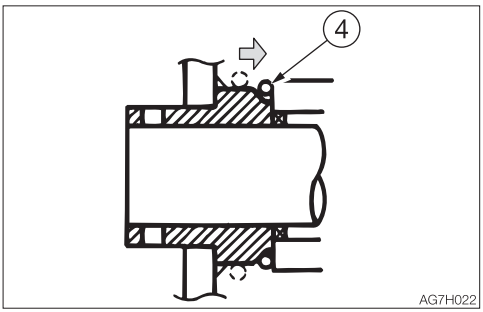

5. Slide the O-ring (4).

Replacing the pin seal

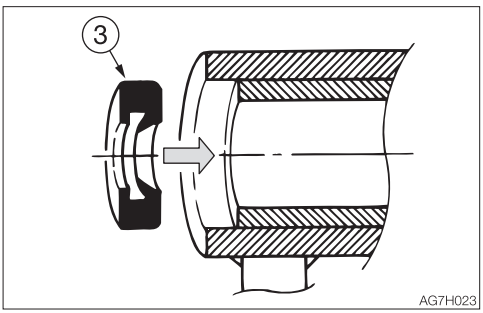

1. Set the pin seal (3) in the direction shown on the figure above.
2. Use a mallet to slowly press the pin seal in. Be careful not to damage the seal.

LUBRICATING THE LEVERS AND PEDALS

⚠ WARNING

Set the machine to the parking posture, stop the engine, remove the starter key and store it. Failure to do so may result in the machine moving abruptly, leading to serious injury or death.

If the levers or pedals no longer move smoothly, grease them.

Operating levers

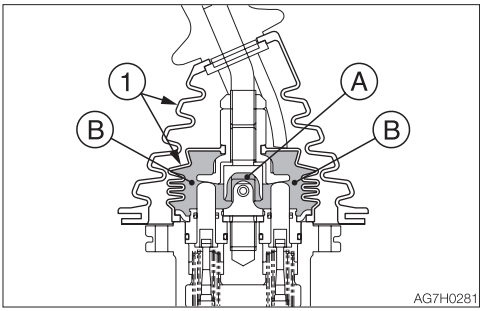

1. Remove the lower mount section of the boot (1) and turn it upward.
2. Wipe off the old grease.
3. Apply grease to points (A) and (B).
4. Set the boot (1) back as it was.

Travel levers, dozer blade lever, pedals

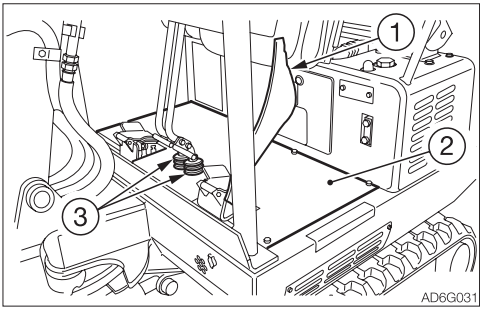

1. Remove the floor mat (1).
2. Loosen the bolts and remove the cover (2).
3. Remove the lower mount section of the boot (3) and turn it upward.

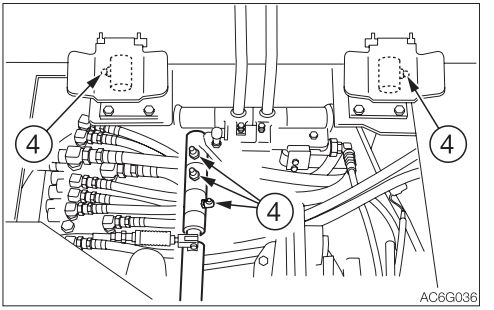

4. Use the grease gun to lubricate the grease fitting (4).
5. Wipe off the excess grease.
6. For installation, follow the same procedure as for removal in the reverse order.

INSPECTING THE RUBBER CRAWLERS

Repair or replace the rubber crawlers if their condition becomes as described below. Consult your sales or service dealer for repair or replacement.

Rubber crawler
Replace the crawler if the entire crawler is stretched and cannot be adjusted.

(1) Lug

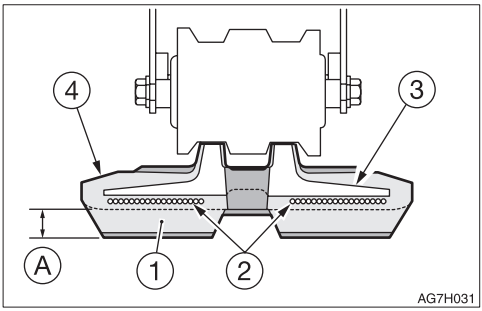

Replace if the height of (A) is 5 mm (0.2 in.) or below.

(2) Steel cord

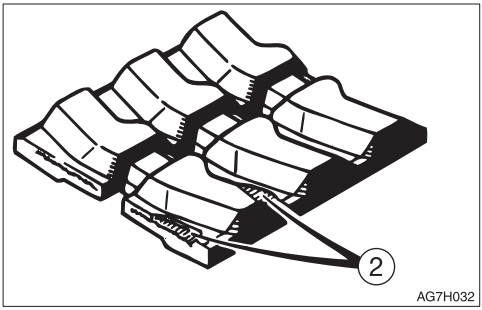

Replace if the steel cord is exposed for two links or more.
Replace if the half or more of the steel cords on one side are cut.

(3) Metal core

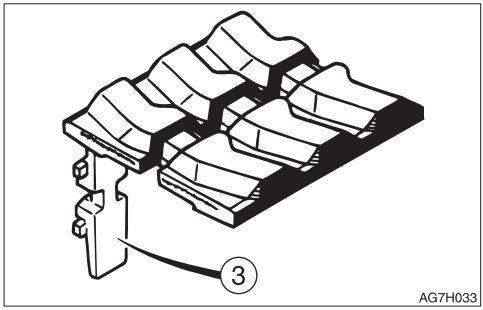

Replace if even one metal core is off.

(4) Rubber

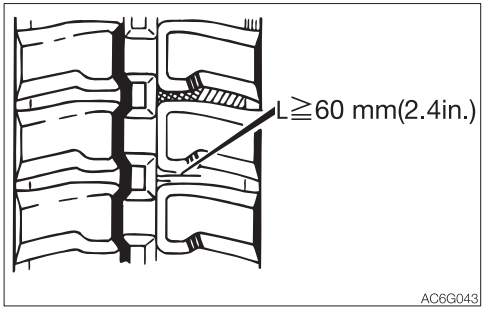

Repair if there are cracks of 60 mm (2.4 in.) or greater in length.
If the steel cord is visible, repair as soon as possible, regardless of the length of the crack.

REPLACING THE RUBBER CRAWLERS

⚠ WARNING

- **If you must work beneath the raised machine or working equipment, always use wood blocks, jack-stands or other rigid and stable supports. Never get under the machine or working equipment if they are not sufficiently supported.**
- **If maintenance must be performed with the engine running, always work as a two person team communicating each other.**
  - **One person must sit in the operator's seat so that he/she can immediately stop the engine when necessary. He/she must take care not to touch the lever or pedal unless necessary.**
  - **The one who performs maintenance must make sure to keep his/her body or clothing away from the moving part of the machine.**

Removal

1. Fully release the tension of the rubber crawler.
   Refer to "Inspecting and adjusting the crawler tension" on page 5-28.

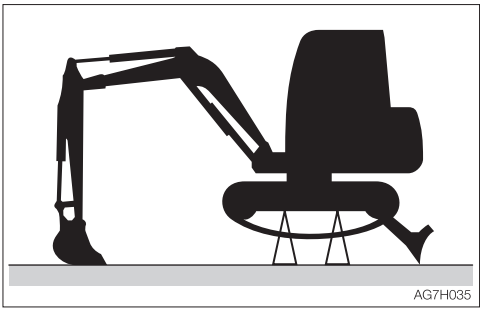

2. Use the working equipment to lift the body.

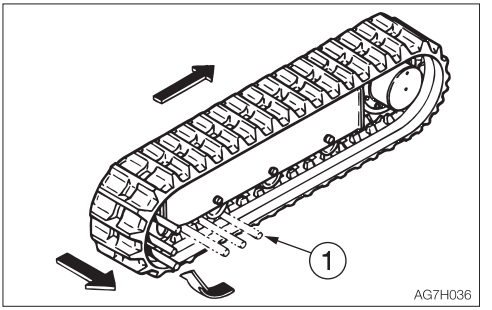

3. Set an iron pipe (1) in the rubber crawler and turn the sprocket slowly in the reverse direction.
4. Turn until the iron pipe (1) is directly next to the idler and the rubber crawler lifts away from the idler, then stop turning the sprocket.
5. Slide the rubber crawler sideways and remove it from the crawler frame.
   Remove the other rubber crawler using the same procedure.

Installation

1. Use the working equipment to lift the body.

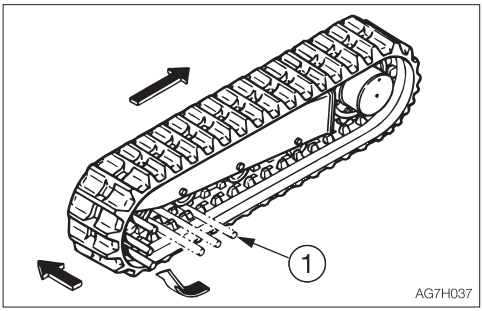

2. Set the rubber crawler on the sprocket.
3. Set an iron pipe (1) in the rubber crawler and turn the sprocket slowly in the reverse direction.
4. Turn until the iron pipe (1) is directly next to the idler and the rubber crawler lifts away from the idler, then stop turning the sprocket.
5. Slide the rubber crawler inward, engage it on the idler, then pull out the iron pipe.
6. Check that the rubber crawler is securely engaged on the sprocket and idler.
7. Tighten the rubber crawler to the standard tension.
   Refer to “Inspecting and adjusting the crawler tension” on page 5-28.
8. Install the other rubber crawler using the same procedure.

INSPECTING AND REPLENISHING THE WINDSHIELD WASHER FLUID

⚠ WARNING

Choose ethyl alcohol as washer solution. Do not use methyl alcohol as washer solution. It could damage the eyes.

Use a windshield washer fluid designed specifically for motor vehicles. Follow the instructions included with the washer fluid.

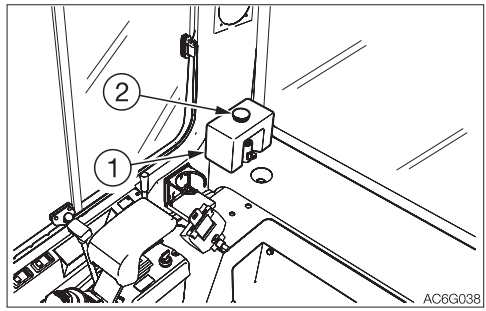

Inspection

1. Open the cab door.
2. Inspect the washer tank (1) and add washer fluid if the level is low.

Replenishing

1. Mix the washer fluid to the prescribed concentration.
2. Remove the cap (2) and add washer fluid. Keep the dust away while replenishing the washer fluid.
3. Install the cap (2).

MAINTENANCE DURING EXTENDED STORAGE PERIOD

Storage procedures

If the machine is to be stored for 30 days or more, store it indoors. If it must be stored outdoors, park the machine on a surface laid with lumber on a flat ground, and place a waterproof cover over it so that it stays dry.

1. Clean the machine.
2. Inspect for oil leakage, water leakage, cracks and loose nuts and bolts.
3. Add fuel and replace the hydraulic oil and oil.
4. To prevent rusting and freezing, replace the engine coolant with long-life coolant (LLC).
   Refer to “Cleaning the engine cooling system” on page 5-45.
5. Use the grease gun to lubricate the grease fittings.
6. Fully retract the bucket and arm cylinders and lower the bucket and dozer blade to the ground.
7. Apply rust-inhibiting oil to the hydraulic cylinder rods.
8. Disconnect the negative cable from the battery and cover the battery to prevent freezing.

During storage

⚠ WARNING

- **Do not operate the machine in an enclosed area without adequate ventilation.**
- **If natural ventilation is not possible, install ventilators, fans, exhaust extension pipes or other venting devices.**

1. To prevent rusting, operate the machine once a month so that the oil can be circulated throughout the system.
2. Inspect the battery and recharge it as necessary.
   Ask your sales or service dealer for recharging.

Starting the machine after storage

IMPORTANT: If the above “Storage procedures” have not been followed during the extended storage periods, consult your sales or service dealer before starting the machine again.

1. Wipe off the rust-inhibiting oil that was applied on the piston rods of the hydraulic oil cylinders.
2. Add oil or grease as necessary.

Returning the engine to service

1. Perform the daily checks.
2. The engine should be pre-oiled before startup.
   a. Crank the engine, leaving the fuel system shut off so the engine will not start, for 15 seconds.
   b. Then pause for 30 seconds.
   c. Repeat the procedure until you have cranked the engine for a total of one minute. This will circulate the oil in the engine’s lubrication system.
3. Prime the fuel system.
4. Start the engine. Allow the engine to idle for approximately 15 minutes while you check for:
   - Proper oil pressure
   - Fuel, engine oil or coolant leaks
   - Proper operation of the indicators and/or gauges
5. Avoid prolonged operation at minimum or maximum engine speeds and loads for the remainder of the first hour of operation.

TROUBLESHOOTING



SYMPTOMS THAT ARE NOT MALFUNCTIONS

The symptoms listed below are not malfunctions.

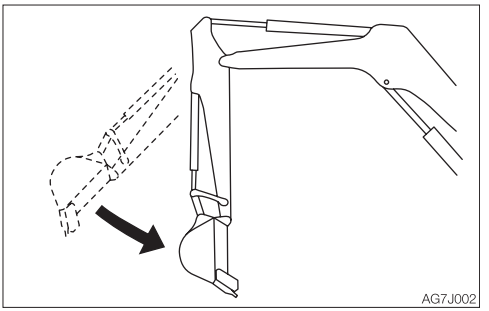

- The arm retracting speed momentarily slows down when it reaches an almost vertical position while the engine is running at low speed.

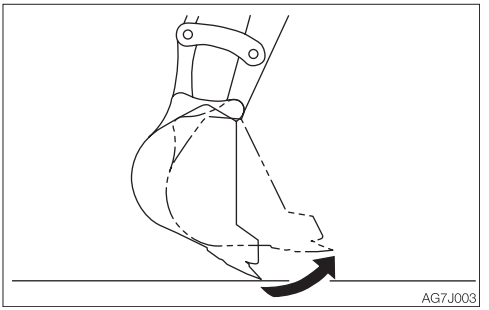

- The bucket teeth moving speed momentarily slows down when it reaches an almost horizontal position while the engine is running at low speed.
- The slew motor produces noise at the beginning and end of the slewing.
- The travel motor produces noise when stopped suddenly from its high speed traveling.
- The control valve produces noise if excessive force is applied to the working equipment or when it moved to the stroke end.
- It becomes less easy to operate the machine when an attachment weighing more than a standard arm or bucket is installed.

IF THE ENGINE OVERHEATS

⚠ WARNING

- **Do not open the engine hood and covers when steam is coming from it. The steam or hot water may spurt out and cause burns.**
- **Do not try to remove the radiator cap or the drain plug when the cooling water is hot. Stop the engine, wait until the engine and the radiator cool, and then slowly loosen the radiator cap to release the internal pressure.**
- **Before performing maintenance, stop the engine and allow the machine to cool down.**

The symptoms listed below indicate overheating.

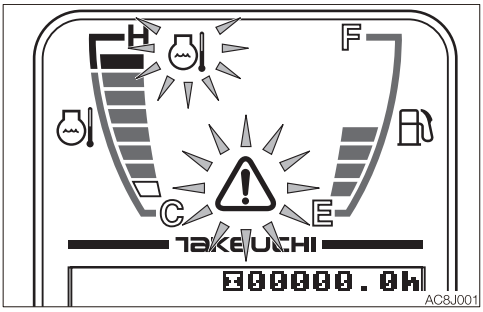

- An alarm is sounded and the engine emergency lamp and the coolant temperature warning lamp start flashing.
- The water temperature gauge LED is in the red zone.
- Steam comes from the engine room.

Remedy procedure

1. Park the machine in a safe place.
2. Check if steam is coming out of the closed engine hood and covers.
3. If there is steam, stop the engine immediately and contact your sales or service dealer for repair. If steam, is not coming out run the engine at low idle and let the water temperature cool down.
4. When the water temperature gauge LED drops in the green zone, stop the engine.
5. Perform the inspections and the remedies listed below once the engine cools down.
   - Fan belt slack..... Adjust
     Refer to page 5-25.
   - Coolant level ..... Add
     Refer to page 5-18.
   - Water leakage..... Repair
   - Radiator fins..... Clean
     Refer to page 5-38.
   - Sediment in cooling system
     ..... Clean
     Refer to page 5-45.

If the problem persists after the above remedies, contact your sales or service dealer for repair.

IF THE BATTERY GOES DEAD

The symptoms below indicate that the battery is dead.
- The starter motor does not turn or fails to start the engine.
- The horn is too weak.

Remedy procedure

Start the engine using the booster battery on the other vehicle (booster vehicle) and the jumper cables.

⚠ WARNING

- **When starting the engine using the jumper cables, be sure to connect the cables by following the proper steps. Improper use of jumper cables can result in battery explosion or unexpected machine motion.**
  - **Do not allow the booster vehicle and the machine with a dead battery (dead machine) to touch each other.**
  - **Do not allow the positive (+) and the negative (–) clips of the jumper cables to touch each other.**
  - **When connecting, attach the jumper cable to the positive (+) terminals first. When disconnecting, remove the cable from the negative (–) terminal (ground) first.**
  - **Connect the last clip of the jumper cable to a point as far away from the battery as possible.**
- **Always wear the protective goggle when jump starting the engine by using the jumper cables.**

IMPORTANT: Use the jumper cables and clips of a size suited to the capacity of battery. Do not use damaged or corroded jumper cables and clips.
IMPORTANT: Be sure that the battery of the booster vehicle has the same capacity as the battery of the dead machine.
IMPORTANT: Be sure to connect the clips securely.

Connecting the jumper cables

IMPORTANT: Set the starter keys of the booster vehicle and the dead machine to the OFF position.

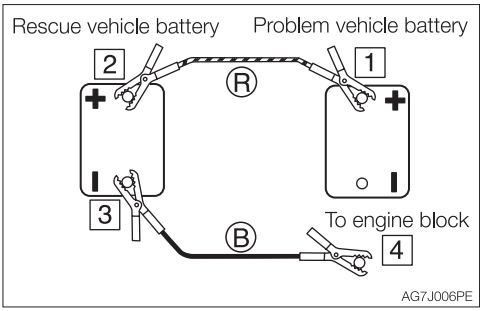

1. Connect the clip of jumper cable (R) to the positive (+) battery terminal of the dead machine.
2. Connect the other clip of jumper cable (R) to the positive (+) battery terminal of the booster vehicle.
3. Connect the clip of jumper cable (B) to the negative (–) battery terminal of the booster vehicle.
4. Connect the other clip of jumper cable (B) to the engine block of the dead machine. Connect the clip to a place as far from the battery as possible.

Starting the engine

1. Check that the clips are securely connected to the terminals.
2. Start the engine of the booster vehicle and run it at high speed.
3. Start the engine of the dead machine.

Disconnecting the jumper cables

Once the dead machine is successfully running, remove the jumper cables by following the same steps as for connection in the reverse order.

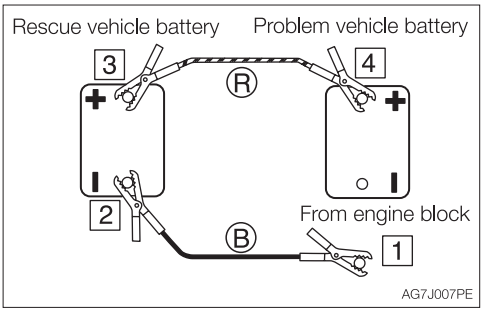

1. Disconnect the clip of jumper cable (B) from the engine block of the dead machine.
2. Disconnect the other clip of jumper cable (B) from the negative (–) battery terminal of the booster vehicle.
3. Disconnect the clip of jumper cable (R) from the positive (+) battery terminal of the booster vehicle.
4. Disconnect the clip of jumper cable (R) from the positive (+) battery terminal of the dead machine.

Recharging

Ask your sales or service dealer for recharging the dead battery.

IF A FUSE BLOWS

If a light does not come on or the electrical system does not work, a fuse may be blown. Inspect the fuses.

INSPECTING AND REPLACING THE FUSE

⚠ WARNING

If the fuse blows again soon after replacement, then the electric system is likely faulty. It may pose a fire hazard if not properly repaired. Contact your sales or service dealer for advice.

1. Turn the starter key to the OFF position to stop the engine.
2. Open the maintenance cover.

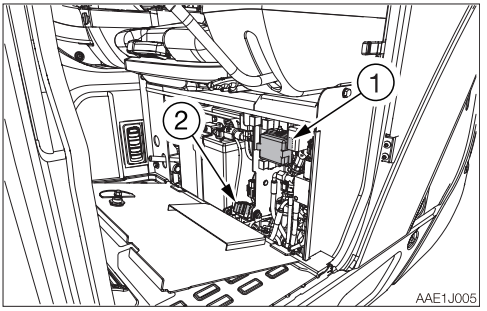

3. Open the fuse box cover (1).
4. Check for any blown fuses.

Note: Inspect the fuse box (2) too if it is provided.

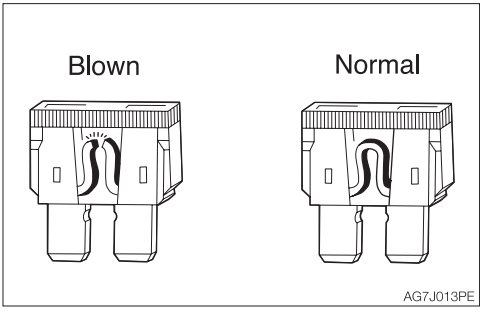

5. If a fuse is blown, replace it with a spare fuse of the same capacity.

Fuse layout and circuits protected (1)

<Applicable machine models 216000002 or later>

Capacity	Protected circuit	Capacity	Protected circuit
25A	Reserve		
10A	Cluster	**20A**	Light
10A	Horn	**5A**	Lever lock
25A	Cab interior power supply (Cab)	**10A**	Third auxiliary hydraulic
15A	Feed pump	**15A**	Option (1)
15A **20A***	Heater (Cab)	**25A**	Engine power source

*: If equipped

<Applicable machine models 216100002 or later>

Capacity	Protected circuit	Capacity	Protected circuit
25A	Controller		
10A	Cluster	**20A**	Light
10A	Horn	**5A**	Lever lock
		10A	Third auxiliary hydraulic
15A	Feed pump	**15A**	Option (1)
25A	Highland mode	**25A**	Engine power source

Fuse layout and circuits protected (2)*

Capacity	Protected circuit
20A	Rear defroster

*: If equipped

INSPECTING THE FUSIBLE LINK

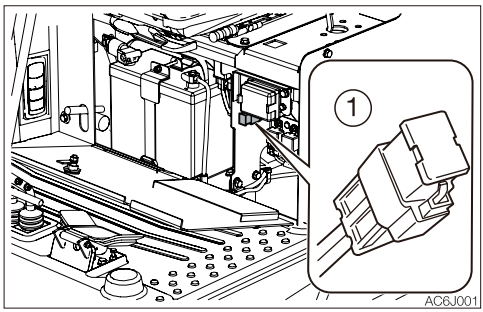

If the machine is not turned on after turning the starter switch to the ON position, the cartridge type fusible link (1) is likely blown. Open the maintenance cover and inspect. If the fusible link is blown, please contact your sales or service dealer.

Note: Fusible links are large type fuses used in high current applications. Like a regular fuse, they act as fuses by protecting the electric components and wirings from damage caused by excessive current draw.

RESTARTING AFTER ADDING FUEL

BLEEDING AIR FROM THE FUEL SYSTEM

IMPORTANT: NEVER use the starter motor to crank the engine in order to prime the fuel system. This may cause the starter motor to overheat and damage the coils, pinion gear and/or ring gear.
IMPORTANT: If the engine stalls due to fuel shortage, add fuel, turn the key to the ON position for 60 seconds, and then turn it to the START position. Running the starter for a long time before there is enough fuel is going through can cause the starter to fail.

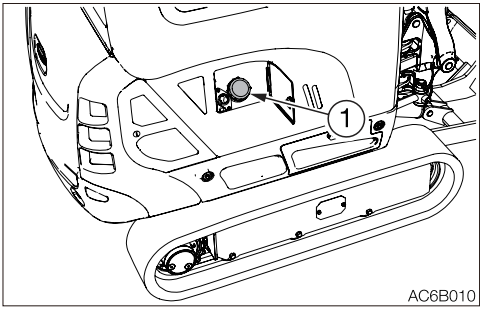

1. Add fuel.

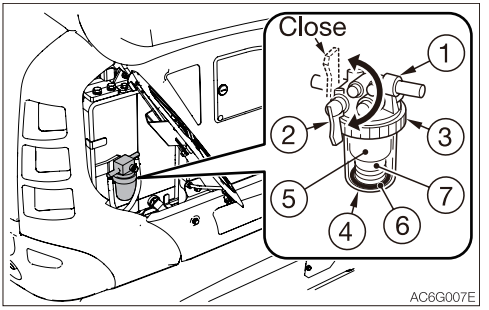

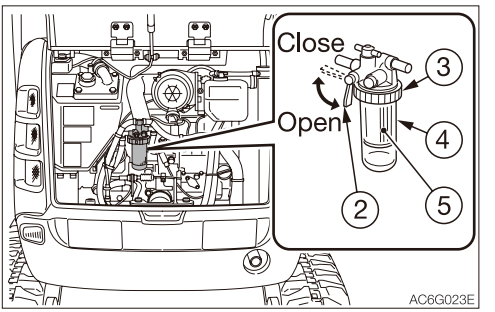

2. Open the valve (2) of the water separator and the fuel filter.

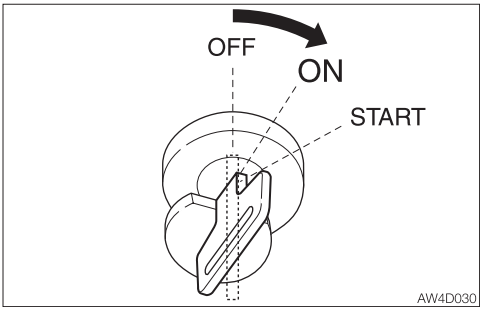

3. Turn the starter key to the ON position and hold it for about 60 seconds.
   The automatic air bleeder bleeds air from the fuel system.

Note: Air in the fuel system causes the engine to fail to start or to have other problems. Always bleed air when the fuel tank is emptied or when there is air in the fuel system.

IF A WARNING LAMP FLASHES

If an alarm is sounded or a warning lamp starts flashing during operation, park the machine in a safe place and perform the remedy procedures described below.

Warning lamp	Lamp name	Causes and remedies
 AW4J007	**Engine emergency lamp**	There is a problem in the engine. Refer to the respective warning lamp below.
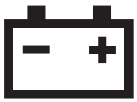 AG7J019	**Battery charge warning lamp**	There is a problem with the fan belt or charger. Check the fan belt for slack or breakage and adjust as necessary. If the lamp continues flashing after maintenance, there is likely a problem with the charger. Consult your sales or service dealer for help. Refer to “Inspecting and adjusting the fan belt” on page 5-25.
 AG7J017	**Engine oil pressure warning lamp**	A problem has occurred in the engine lubrication system. Inspect the engine oil level. If the lamp is flashing when the oil is normal or if it continues flashing after replenishment of oil, consult your sales or service dealer. Refer to “Inspecting and replenishing the engine oil” on page 5-19.
 AG7J018	**Coolant temperature warning lamp**	The coolant temperature is too high and the engine is overheating. Refer to “If the engine overheats” on page 6-3.
 AW4J010	**Fuel level warning lamp**	The fuel level is too low. Add fuel. Refer to “Inspecting the fuel level” on page 5-20.

OTHER SYMPTOMS

For symptoms not included in the table below or if the problem persists after the proper remedies have been taken, consult your sales or service dealer.

Symptoms	Major causes	Remedies
Left and right operating levers do not move smoothly	• Insufficient grease on the left and right operating levers	• Grease the levers. Refer to page 5-54.
Blade lever and throttle lever do not move smoothly	• Wire is stretched too lose	• Adjust or replace (ask your sales or service dealer).
Hoe attachment, slewing or traveling operation not possible	• Safety lock lever is raised (locked)	• Lower (release) the safety lock lever. Refer to page 2-29.
	• Fuse is blown	• Replace the fuse. Refer to page 6-6.
	• Adjustment of travel lock is faulty	• Adjust the travel lock (ask your sales or service dealer).
Digging force is insufficient	• Hydraulic oil level too low	• Add to the specified level. Refer to page 5-21.
	• Hydraulic oil is not warm enough	• Perform the warm-up. Refer to page 3-8.
	• Air cleaner is clogged	• Clean the air cleaner. Refer to page 5-36.
	• Hydraulic oil is not of suitable type	• Replace the hydraulic oil. Refer to page 5-48.
Traveling is not possible or not smooth	• Stones or foreign objects are stuck	• Remove the foreign object.
Machine veers to the right/left	• Stones or foreign objects are stuck	• Remove the foreign object.
	• Faulty crawler tension adjustment	• Adjust the crawler to the prescribed tension. Refer to page 5-28.
Travel speed cannot be changed	• Fuse is blown	• Replace the fuse. Refer to page 6-6.

Symptoms	Major causes	Remedies
Slewing is not possible or not smooth	• Insufficient grease on slew bearing	• Grease the bearing. Refer to page 5-30.
Hydraulic oil temperature is too high	• Hydraulic oil level too low	• Add up to the specified level. Refer to page 5-21.
Starter motor turns but engine does not start	• Insufficient fuel	• Add fuel. Refer to page 5-20.
	• Air in fuel system	• Bleed air. Refer to page 6-8.
	• Water in fuel system	• Drain water. Refer to page 5-31.
Crawlers come off	• Crawlers too loose	• Increase the tension. Refer to page 5-28.
Engine exhaust is white or bluish	• Excessive engine oil	• Adjust to the specified level. Refer to page 5-19.
	• Poor fuel	• Replace the fuel.
Engine exhaust is occasionally black	• Air cleaner is clogged	• Clean the air cleaner. Refer to page 5-36.
Irregular noise is produced from the engine (combustion or mechanical noise)	• Low quality fuel is being used	• Replace the fuel.
	• Engine is overheating	• Refer to “If the engine overheats” on page 6-3.
	• Damage inside the muffler	• Replace the muffler. For replacement, ask your sales or service dealer.

LOWERING THE BOOM TO THE GROUND

If the hoe attachment must be lowered to the ground while the engine is stopped, use the following procedure.
This operation is dangerous and requires experience. Ask your sales or service dealer for it.

Procedure

⚠ WARNING

- **Keep away from the working area when the hoe attachment is lowered. You may be hit by dirt falling out of the bucket or the hoe attachment as it drops.**
- **Gradually lower the boom slowly by slowly turning the set screw on the shut-off valve. Do not turn the screw more than the specified amount.**

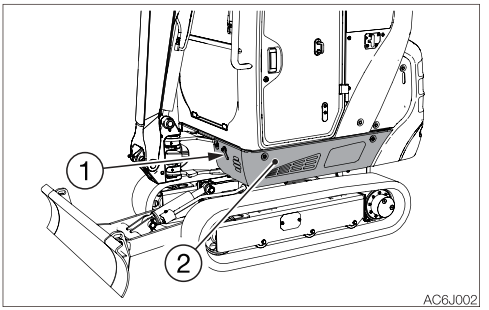

1. Remove the cover (1).
2. Take out the bolt and remove the cover (2).

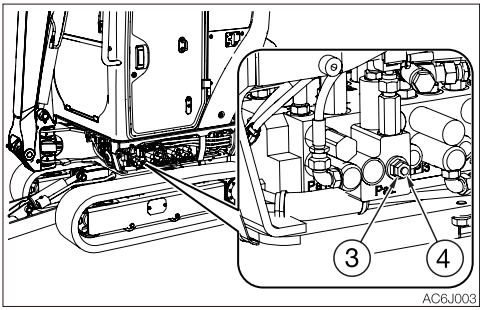

3. Loosen the lock nut (3) while holding the adjust screw (4) in place with a hexagonal wrench so that the adjust screw (4) will not be loosened together with the lock nut (3).
4. Turn the adjust screw (4) slowly 1/4 turn to lower the boom.
5. Check for safety and stability of the machine.
6. Return the adjust screw (4) to the original position.
7. Tighten the lock nut (3) while holding the adjust screw (4) in place with a hexagonal wrench so that the adjust screw (4) will not be loosened together with the lock nut (3).
   - Lock nut (3) tightening torque: 12.4 to 13.6 N·m (9.1 to 10 ft-lb.)
   - Adjust screw (4) tightening torque: 6.3 to 7.5 N·m (4.6 to 5.5 ft-lb.)
8. Reinstall the side cover (1) and the lever (2).

TOWING

⚠ WARNING

When towing, serious injury or death could result, if performed incorrectly or the wire rope being used is inappropriate or not properly inspected.

- **It becomes dangerous if the wire rope breaks or becomes disengaged. Use a wire rope appropriate for the required tractive force.**
- **Do not use a wire rope that is kinked, twisted or otherwise damaged.**
- **Do not apply heavy loads abruptly to the wire rope.**
- **Wear safety gloves when handling the wire rope.**
- **Make sure there is an operator on the machine being towed as well as on the machine that is towing.**
- **Never tow on slopes.**
- **Do not let anyone come near to the wire rope while towing.**

IMPORTANT: Do not tow a machine if its engine does not start or if the machine does not run. Doing so could damage the machine being towed.
When recovering a machine from soft terrain such as mud, hoist the machine or contact your sales or service dealer.
IMPORTANT: Be sure to follow the steps below closely when using the towing hole to tow. Failure to heed even one of the steps may cause damage to the towing hole or other parts of the frame.

Towing the machine (when the engine is started, the travel motor runs)
Use the procedure described below to tow heavy objects or the machine itself if it should get stuck in the mud and not be able to get out on its own.

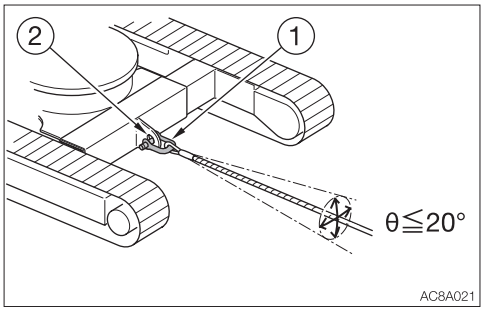

- Permissible force: 28.2 KN (6339 lbf)

1. Attach the wire rope to the shackle (1).
2. Fasten the shackle (1) to the towing holes (2).
3. Make sure that the wire rope is at a cone angle of 20° or less to the travel frame.
4. Move the machine to tension the wire rope.
5. Move the machine at a low speed of 2 km/h (1.24 mph) or less to a place (convenient location for repair) a short distance from the site.

IF THE CAB OR CANOPY IS DAMAGED

⚠ WARNING

Immediately replace the damaged cab or canopy. Serious injury or death may occur if the machine is operated with damaged cab/canopy.
Do not operate the machine until the replacement is complete. Do not try to repair the damaged cab or canopy by welding. Doing so could endanger the safety of the cab/canopy.

<Applicable machine models 216000002 or later>
<Applicable machine models 216100472 or later>
- Cab parts No. 03386-00101
- Canopy parts No.(3) 03384-00135
- Canopy parts No.(4) 03684-16300

<Applicable machine models 216100002 ~ 216100471>
- Canopy parts No.(1) 03384-00120
- Canopy parts No.(2) 03384-00128

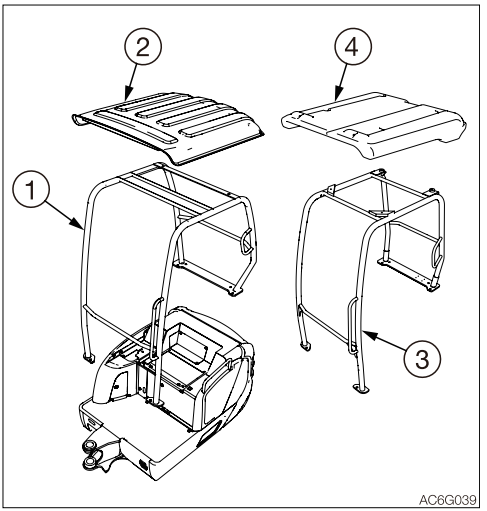

SPECIFICATIONS



BASIC SPECIFICATIONS

<Applicable machine models 216000002 or later>

Type				Cab	Canopy
MASS					
Operating mass	kg (lb)	Rubber crawlers		1865 (4110)	1770 (3900)
		Steel crawlers		1915 (4220)	1820 (4010)
PERFORMANCE					
Bucket capacity (Standard bucket)	m^3 (cu. ft.)	Heaped		0.038 (1.34)	
		Struck		0.028 (0.99)	
Slew speed	min^{-1} (rpm)			9.2 (9.2)	
Travel speed	km/h (mph)	Rubber crawlers	1st	2.2 (1.37)	
			2nd	4.2 (2.61)	
		Steel crawlers	1st	2.1 (1.30)	
			2nd	4.0 (2.49)	
Gradeability	(degrees)			15	
Ground pressure	kPa (psi)	Rubber crawlers		31.0 (4.50)	29.4 (4.26)
		Steel crawlers		34.5 (5.00)	32.8 (4.76)
ENGINE					
Manufacturer and model				Yanmar 3TNV70	
Rated output	Net (ISO 14396)	kW/min^{-1} (hp/rpm)		11.5/2400 (15.4/2400)	
	Net (ISO 9249/ SAE J1349)	kW/min^{-1} (hp/rpm)		11.1/2400 (14.9/2400)	
Displacement		ml (cu.in.)		854 (52.1)	
Amount of CO_2 emission*		g/kWh		995	
Starter		V-kW		12-1.0	
Alternator		V-kW		12-0.48	
Battery (IEC 60095-1)		V-A·h		12-45	

*: The amount of CO_2 emission refers to the value obtained by testing the parent engine representing the engine type (engine family member) being used; it shall not guarantee the performance of the machine.

Unit: dB (A)

Type		Cab	Canopy
NOISE EMISSION			
DECLARED SINGLE-NUMBER NOISE EMISSION VALUES in accordance with ISO 4871*			
Sound power level (2000/14/EC)	Guaranteed sound power level	92	
Emission sound pressure level at the operator's position**	Emission sound pressure level	78	
Measured values and Uncertainties			
Sound power level (2000/14/EC)	Measured sound power level	91	
	Uncertainty	1	
Emission sound pressure level at the operator's position**	Measured emission sound pressure level	76	
	Uncertainty	2	

*: Declared single-number noise emission values are the sum of measured values and the associated uncertainty.
**: Values determined according to noise test code given in ISO 6396.

<Applicable machine models 216100002 or later>

Type				Canopy
MASS				
Operating mass	kg (lb)	Rubber crawlers		1770 (3900)
PERFORMANCE				
Bucket capacity (Standard bucket)	m^3 (cu. ft.)	Heaped		0.038 (1.34)
		Struck		0.028 (0.99)
Slew speed	min^{-1} (rpm)			9.2 (9.2)
Travel speed	km/h (mph)	Rubber crawlers	1st	2.2 (1.37)
			2nd	4.2 (2.61)
Gradeability	(degrees)			15
Ground pressure	kPa (psi)	Rubber crawlers		29.4 (4.26)
Noise level dB (A)	Sound power level			L_{WA} 93
	Emission sound pressure level at the operator's position (ISO 6396,2008:)			L_{pA} 77
ENGINE				
Manufacturer and model				Yanmar 3TNV74F
Rated output	Net (ISO 14396)	kW/min^{-1} (hp/rpm)		11.2/2400 (15.0/2400)
	Net (ISO 9249/ SAE J1349)	kW/min^{-1} (hp/rpm)		10.8/2400 (14.5/2400)
Displacement		ml (cu.in.)		993 (60.6)
Amount of CO_2 emission*		g/kWh		1048
Starter		V-kW		12-1.0
Alternator		V-kW		12-0.48
Battery (IEC 60095-1)		V-A·h		12-45

*: The amount of CO_2 emission refers to the value obtained by testing the parent engine representing the engine type (engine family member) being used; it shall not guarantee the performance of the machine.

MEMO

MACHINE DIMENSIONS

Cab <Applicable machine models 216000002 or later>

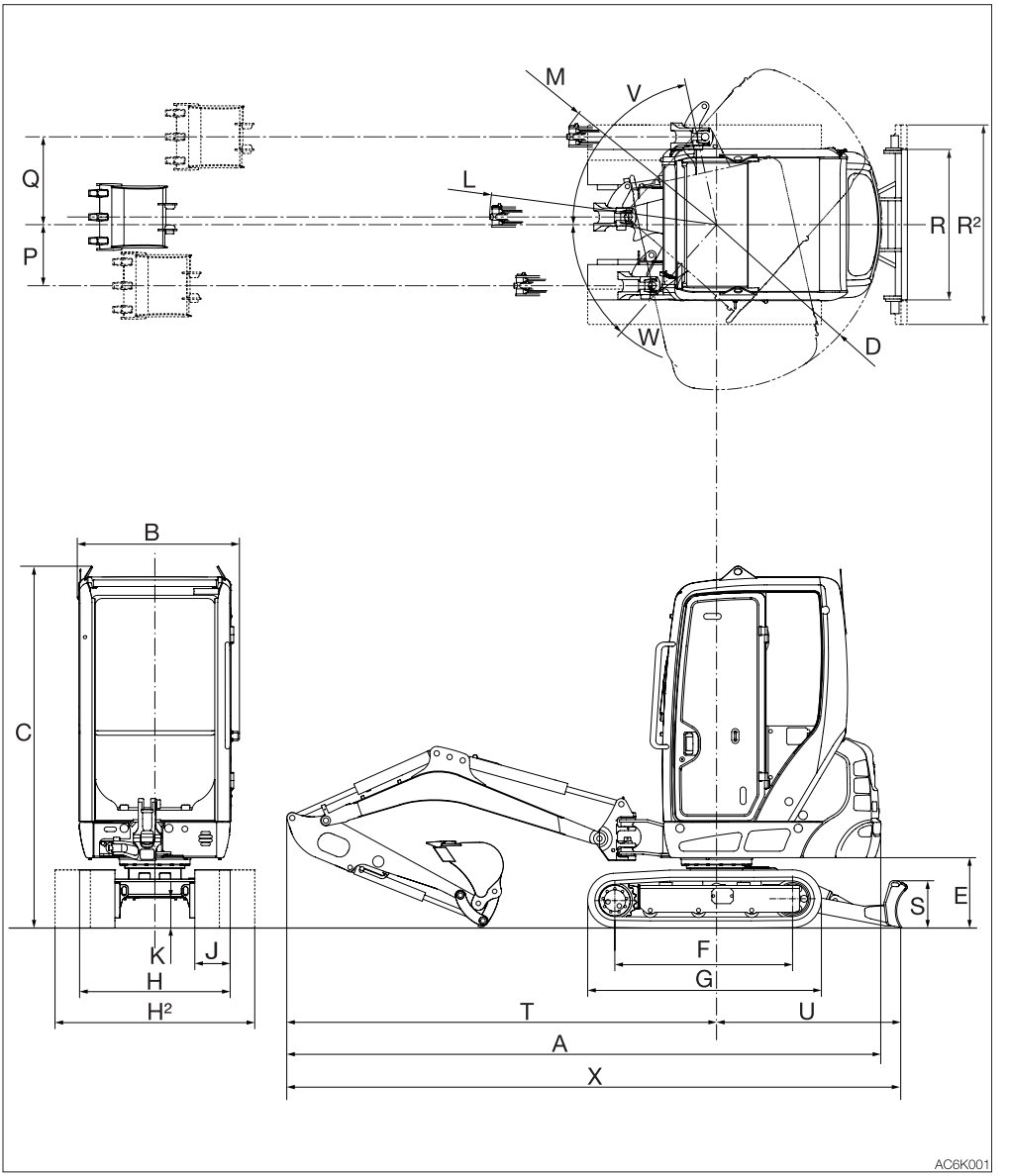

Cab <Applicable machine models 216000002 or later>

Unit: mm (inch)

	Item	Long arm		Short arm	
		Rubber crawlers	Steel crawlers	Rubber crawlers	Steel crawlers
A	Overall length	3870 (152.3)	←	3875 (152.6)	←
B	Upperstructure overall width	1055 (41.5)	←	←	←
C	Overall height	2360 (92.8)	2365 (93.0)	2360 (92.8)	2365 (93.0)
D	Slew radius	1075 (42.3)	←	←	←
E	Clearance height under upperstructure	460 (18.0)	465 (18.2)	460 (18.0)	465 (18.2)
F	Crawler base	1155 (45.6)	1135 (44.7)	1155 (45.6)	1135 (44.7)
G	Crawler overall length	1520 (59.9)	1505 (59.3)	1520 (59.9)	1505 (59.3)
H	Crawler overall width (narrow)	980 (38.6)	←	←	←
H[2]	Crawler overall width (wide)	1300 (51.2)	←	←	←
J	Crawler shoe width	230 (9.1)	←	←	←
K	Ground clearance of undercarriage	205 (8.0)	210 (8.2)	205 (8.0)	210 (8.2)
L	Minimum radius of equipment and attachment	1480 (58.2)	←	1435 (56.6)	←
M	Minimum radius of equipment at maximum front offset	1155 (45.4)	←	1120 (44.1)	←
P	Offset distance of bucket (right swing)	400 (15.7)	←	←	←
Q	Offset distance of bucket (left swing)	570 (22.5)	←	←	←
R	Dozer blade width (narrow)	980 (38.6)	←	←	←
R[2]	Dozer blade width (wide)	1300 (51.2)	←	←	←
S	Dozer blade height	310 (12.1)	←	←	←
T	Front distance to axis of rotation	2800 (110.2)	←	2805 (110.5)	←
U	Dozer blade distance to axis of rotation	1200 (47.2)	←	←	←
V	Boom swing angle (Left)	80°	←	←	←
W	Boom swing angle (Right)	50°	←	←	←
X	Overall length (dozer blade at rear)	4040 (159.1)	←	4050 (159.4)	←

Canopy

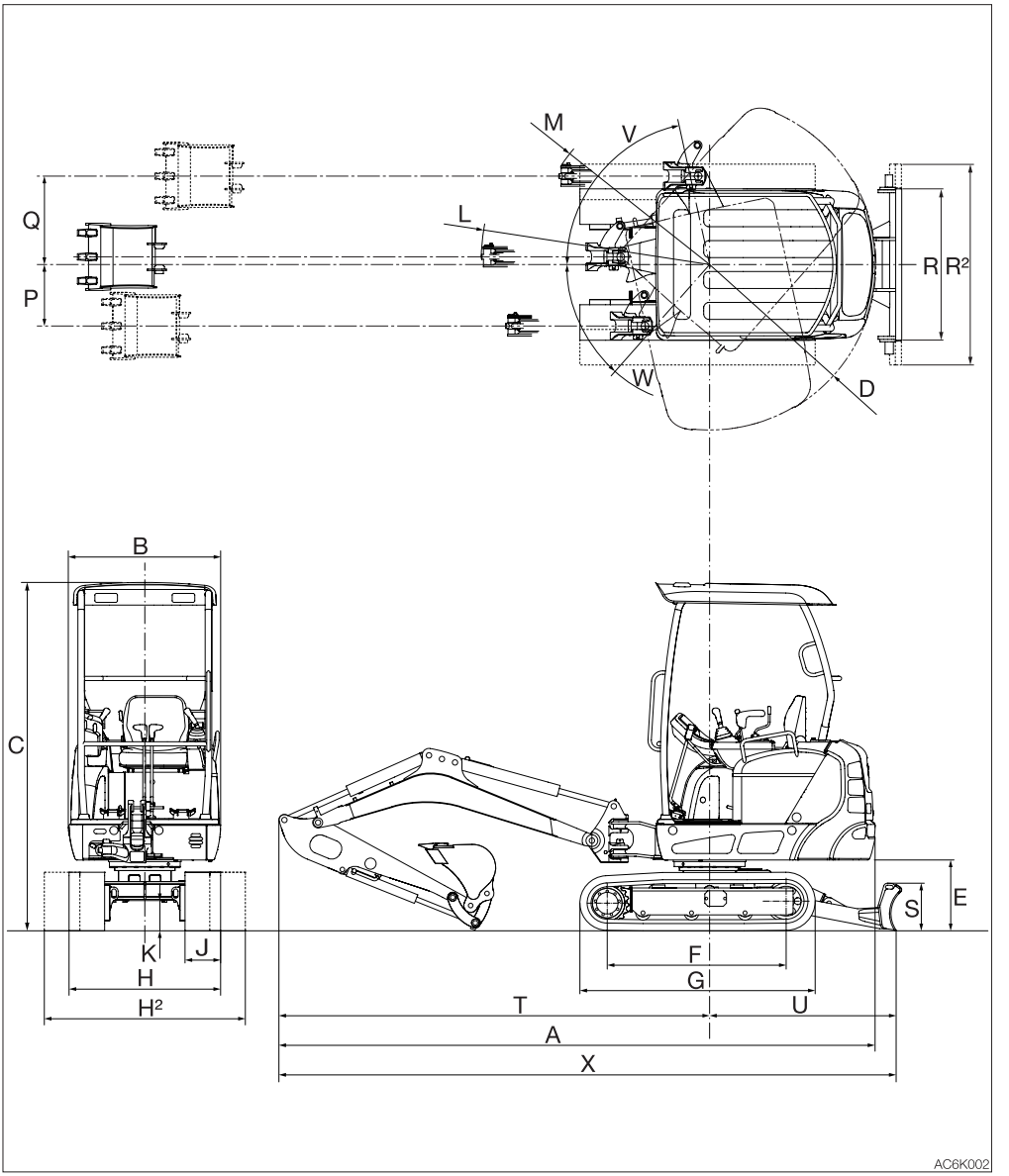

Canopy

Unit: mm (inch)

	Item	Long arm		Short arm	
		Rubber crawlers	Steel crawlers	Rubber crawlers	Steel crawlers
A	Overall length	3870 (152.3)	←	3875 (152.6)	←
B	Upperstructure overall width	985 (38.8)	←	←	←
C	Overall height	2280 (89.8)* 2255 (88.8)**	2285 (90.0)	2280 (89.8)	2285 (90.0)
D	Slew radius	1075 (42.3)	←	←	←
E	Clearance height under upperstructure	460 (18.0)	465 (18.2)	460 (18.0)	465 (18.2)
F	Crawler base	1155 (45.6)	1135 (44.7)	1155 (45.6)	1135 (44.7)
G	Crawler overall length	1520 (59.9)	1505 (59.3)	1520 (59.9)	1505 (59.3)
H	Crawler overall width (narrow)	980 (38.6)	←	←	←
H²	Crawler overall width (wide)	1300 (51.2)	←	←	←
J	Crawler shoe width	230 (9.1)	←	←	←
K	Ground clearance of undercarriage	205 (8.0)	210 (8.2)	205 (8.0)	210 (8.2)
L	Minimum radius of equipment and attachment	1480 (58.2)	←	1435 (56.6)	←
M	Minimum radius of equipment at maximum front offset	1155 (45.4)	←	1120 (44.1)	←
P	Offset distance of bucket (right swing)	400 (15.7)	←	←	←
Q	Offset distance of bucket (left swing)	570 (22.5)	←	←	←
R	Dozer blade width (narrow)	980 (38.6)	←	←	←
R²	Dozer blade width (wide)	1300 (51.2)	←	←	←
S	Dozer blade height	310 (12.1)	←	←	←
T	Front distance to axis of rotation	2800 (110.2)	←	2805 (110.5)	←
U	Dozer blade distance to axis of rotation	1200 (47.2)	←	←	←
V	Boom swing angle (Left)	80°	←	←	←
W	Boom swing angle (Right)	50°	←	←	←
X	Overall length (dozer blade at rear)	4040 (159.1)	←	4050 (159.4)	←

*: Applicable machine models 216000002 or later
Applicable machine models 216100472 or later
**: Applicable machine models 216100002 to 216100471

OPERATING RANGES

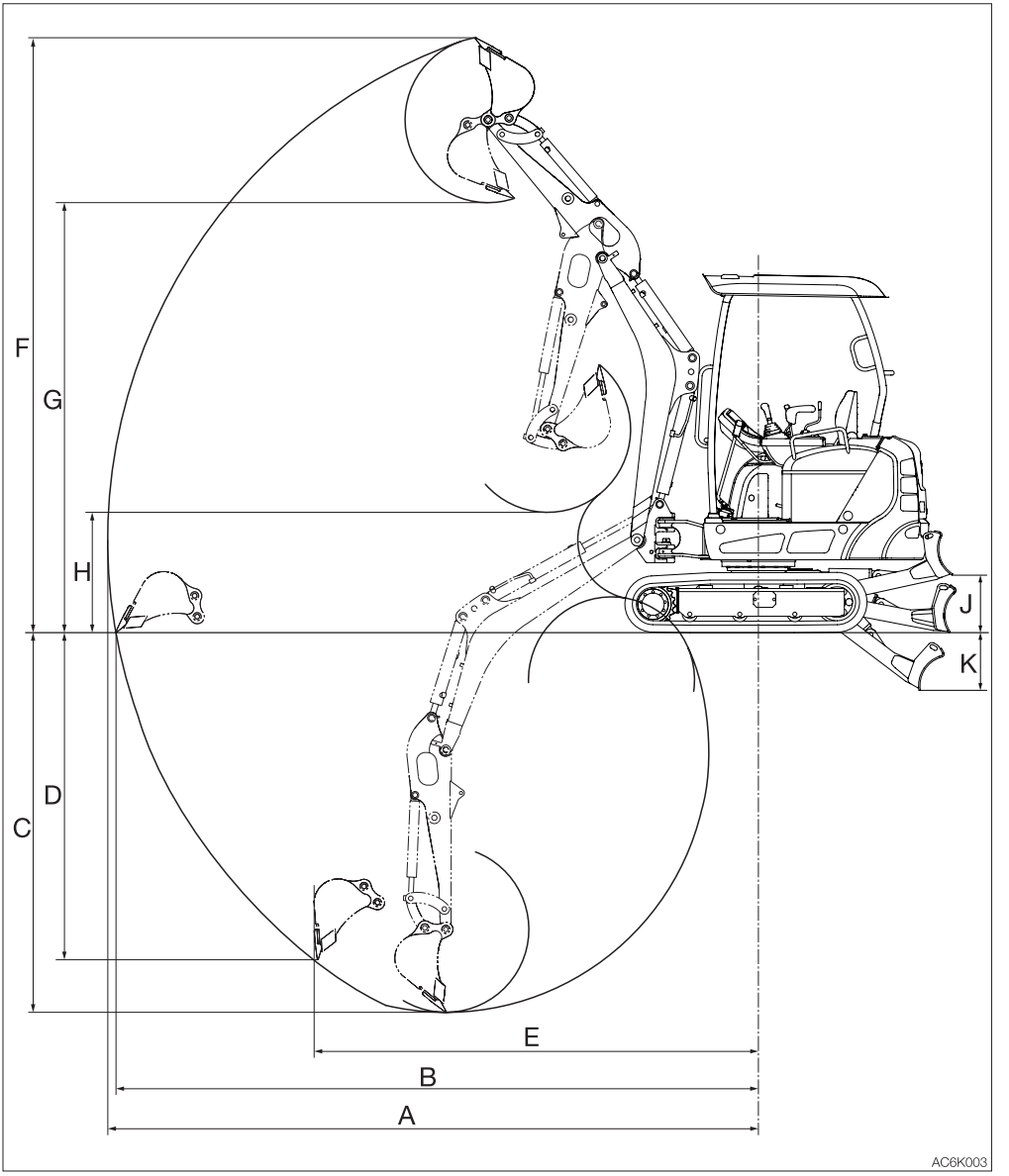

Short arm

Unit: mm (inch)

	Item	Rubber crawlers	Steel crawlers
A	Maximum reach	3900 (153.6)	←
B	Maximum reach at ground reference plane	3845 (151.5)	←
C	Maximum digging depth	2190 (86.1)	2185 (85.9)
D	Maximum vertical digging depth	1870 (73.5)	1865 (73.3)
E	Reach at maximum vertical digging depth	2735 (107.7)	←
F	Maximum height of cutting edge	3590 (141.3)	3595 (141.5)
G	Maximum dumping height	2550 (100.5)	2555 (100.7)
H	Minimum dumping height	955 (37.6)	960 (37.8)
J	Dozer blade maximum lifting	360 (14.2)	365 (14.4)
K	Dozer blade maximum lowering	365 (14.3)	360 (14.1)

Long arm

Unit: mm (inch)

	Item	Rubber crawlers	Steel crawlers
A	Maximum reach	4090 (160.9)	←
B	Maximum reach at ground reference plane	4035 (158.9)	←
C	Maximum digging depth	2390 (94.0)	2385 (93.8)
D	Maximum vertical digging depth	2060 (81.0)	2055 (80.8)
E	Reach at maximum vertical digging depth	2790 (109.9)	←
F	Maximum height of cutting edge	3740 (147.3)	3745 (147.5)
G	Maximum dumping height	2705 (106.5)	2710 (106.7)
H	Minimum dumping height	755 (29.8)	760 (30.0)
J	Dozer blade maximum lifting	360 (14.2)	365 (14.4)
K	Dozer blade maximum lowering	365 (14.3)	360 (14.1)

MEMO

LIFTING CAPACITIES

Rated lift capacity chart

- The loads in the charts do not exceed 87% of hydraulic lift capacity or 75% of tipping load.
- Figures marked with an asterisk (※) are hydraulically-limited capacities.
- The mass of slings and any other lifting devices shall be deducted from the rated load to determine the net load that may be lifted.
- The load point is the bucket hinge pin, and the bucket posture is with the standard bucket completely retracted under the arm.
- Unit: kg (lbs)

Load hooking system

A load hooking system must be provided with the following capabilities.

1. A system which can withstand two-and-a-half times the rated lift capacity no matter at what position the load is applied.
2. A system that poses no risk of the lifted load falling from the hooking device. For example, equipped with a hook slippage prevention device.
3. A system that poses no risk of the hooking system slipping from the hoe attachment.

⚠ WARNING

- **Do not attempt to lift or hold any load that is greater than these rated values at their specified load radii and height.**
- **The rated lift capacities are based on the machine being level and situated on a firm supporting surface. For safe lifting, the operator is expected to make due allowance for the particular job conditions such as soft or uneven ground, non-level condition, side loads, hazardous conditions, experience of personnel, etc. The operator and other personnel should fully acquaint themselves with the operator's manual furnished by the manufacturer before operating this machine. When operating the machine, the safety rules of the equipment must also be followed.**
- **Do not travel while lifting a load; It is very dangerous.**

Long arm <Cab>

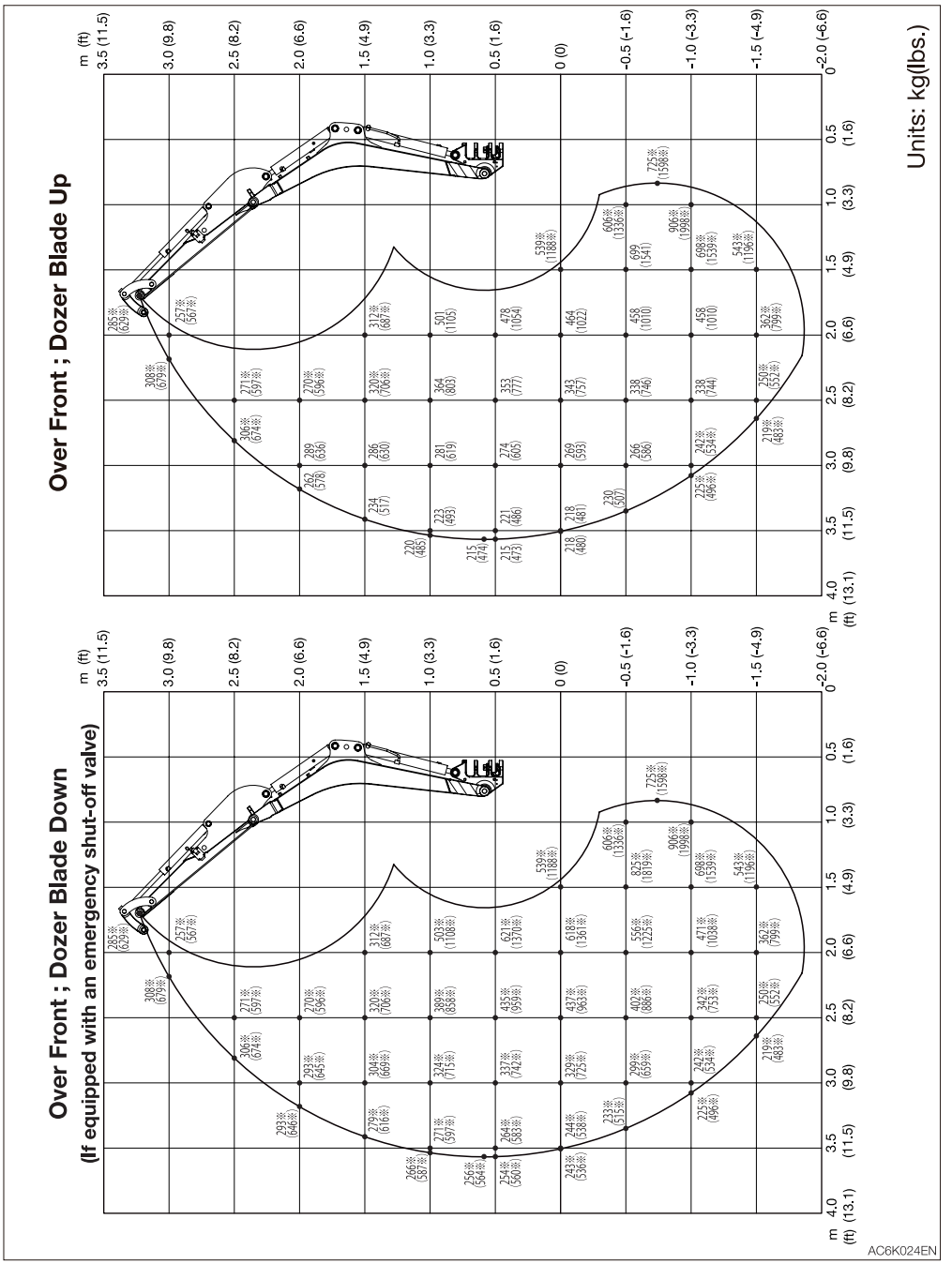
Over Front ; Dozer Blade Down
(If equipped with an emergency shut-off valve)
Over Front ; Dozer Blade Up
Units: kg(lbs.)
AC6K024EN

Long arm <Cab>

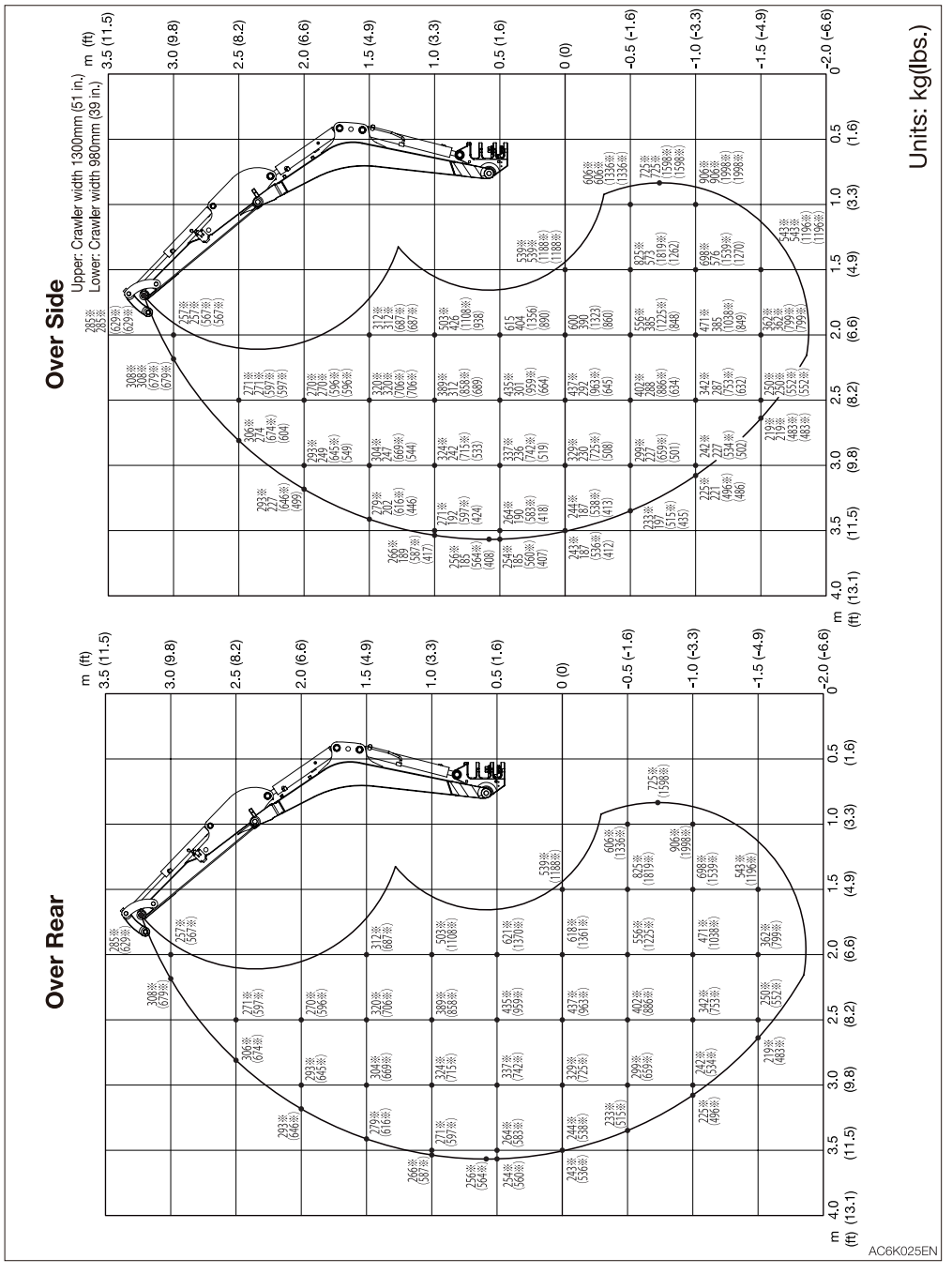
Over Side
Upper: Crawler width 1300mm (51 in.)
Lower: Crawler width 980mm (39 in.)
Over Rear
Units: kg(lbs.)
AC6K025EN

Long arm <Canopy>

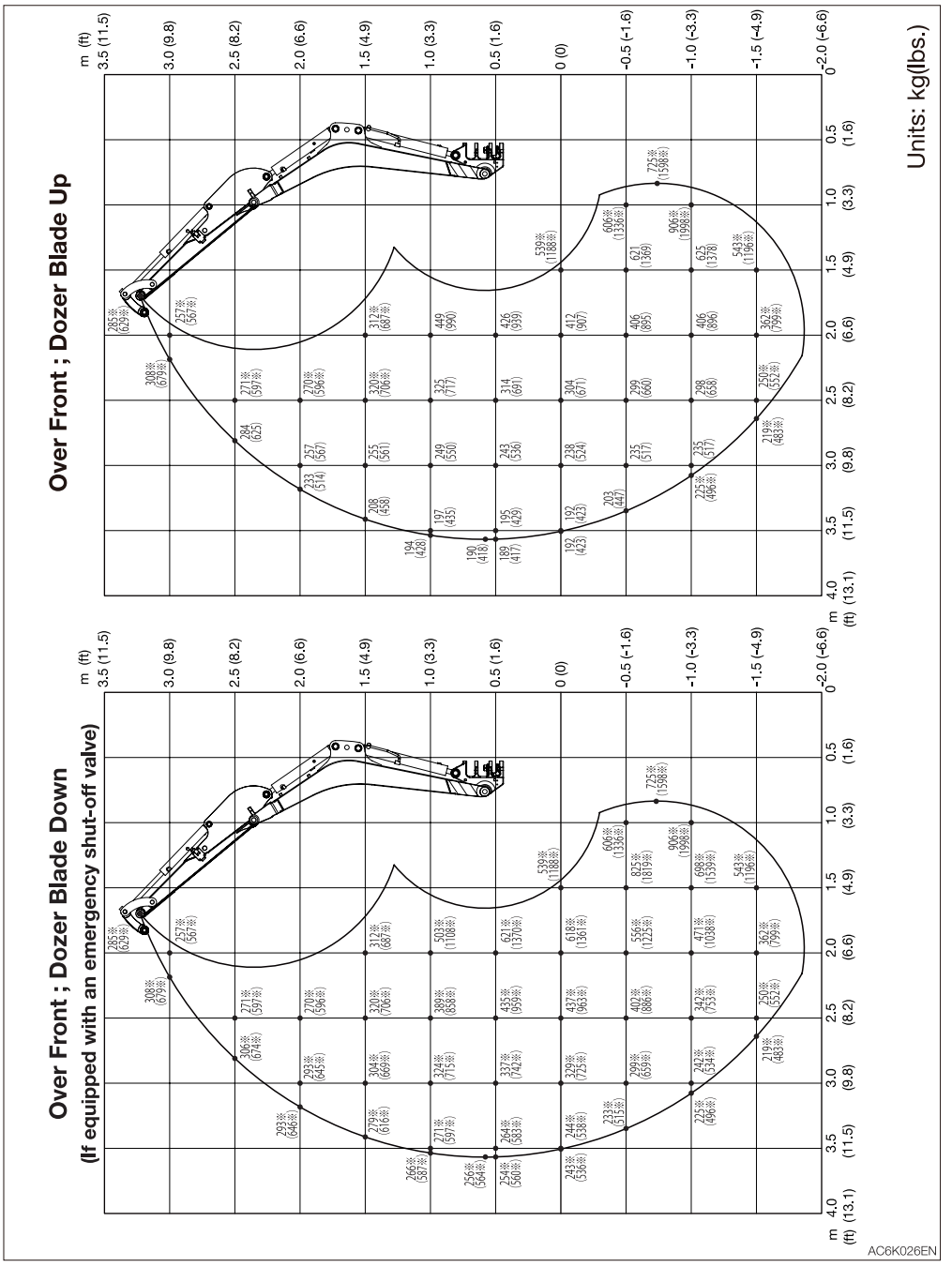

Long arm <Canopy>

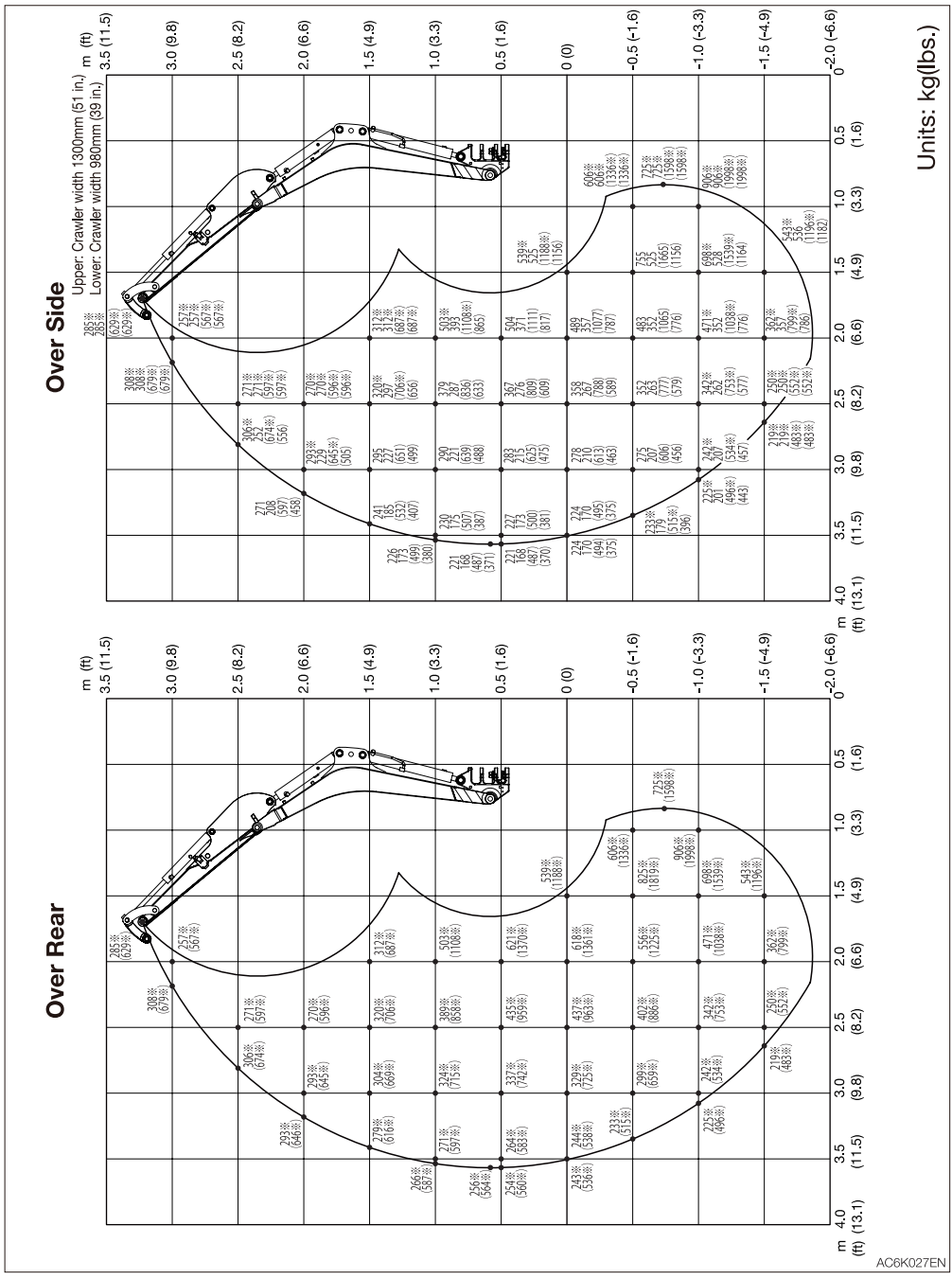

Short arm <Cab>

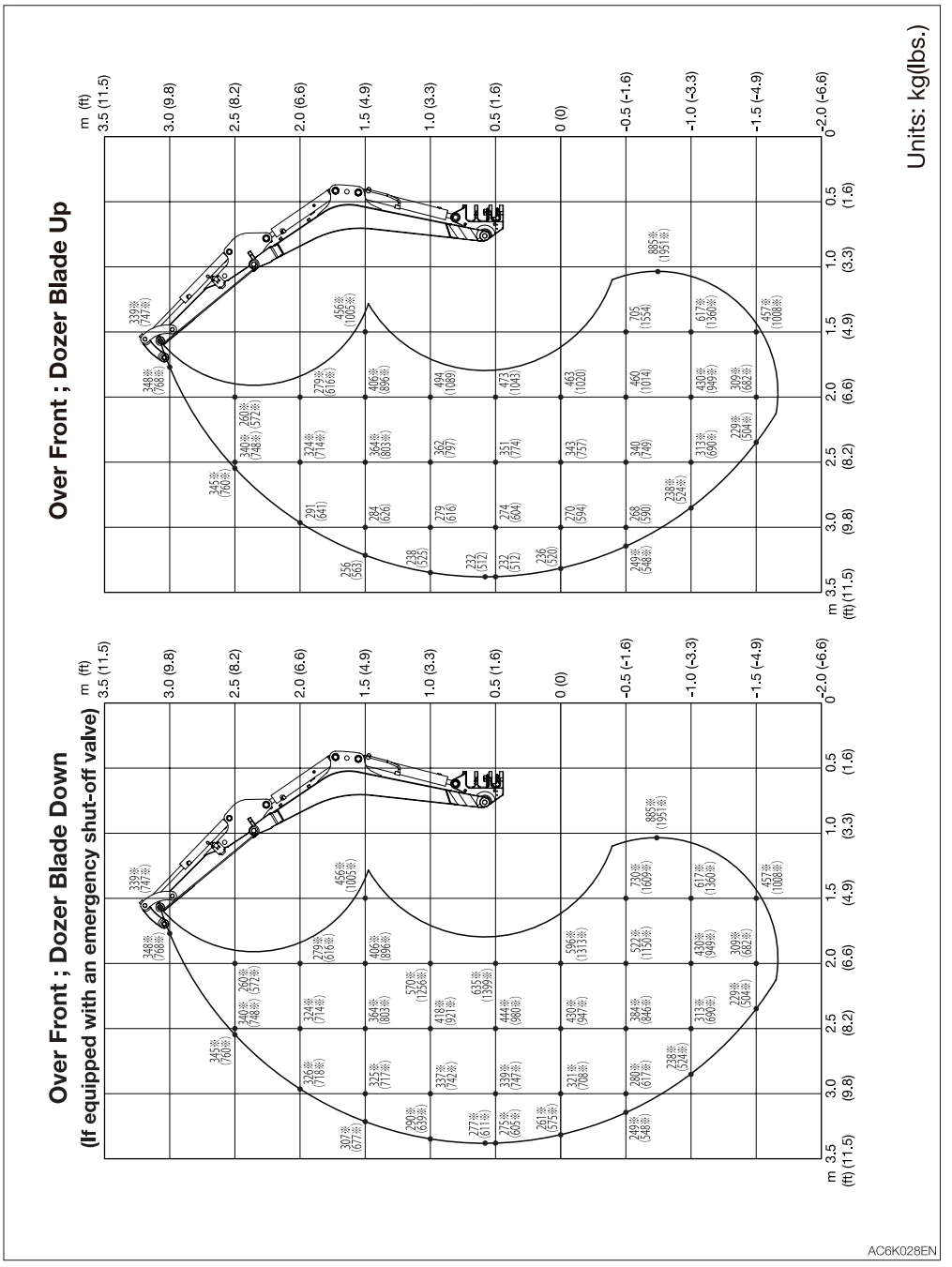

Short arm <Cab>

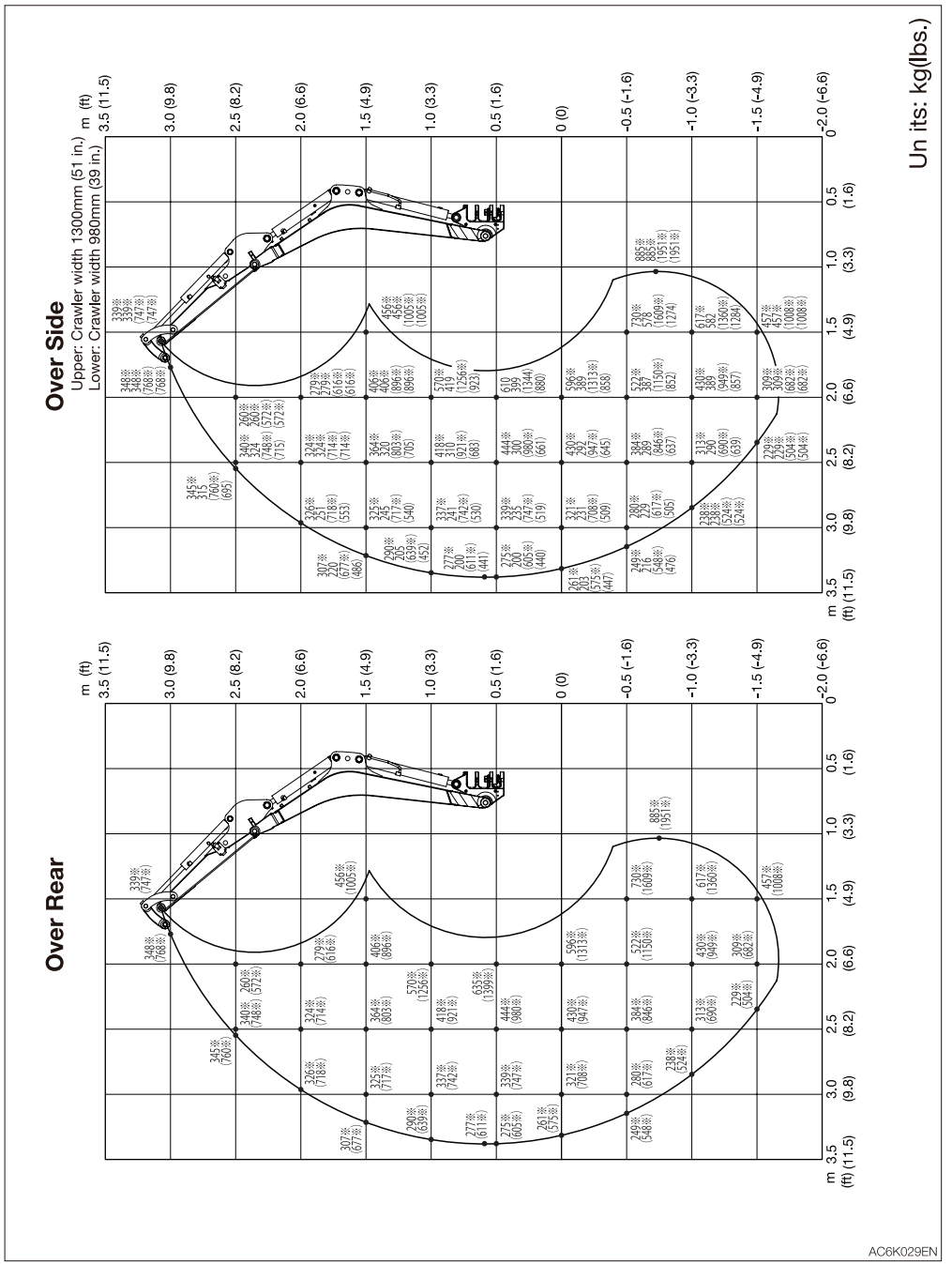

Short arm <Canopy>

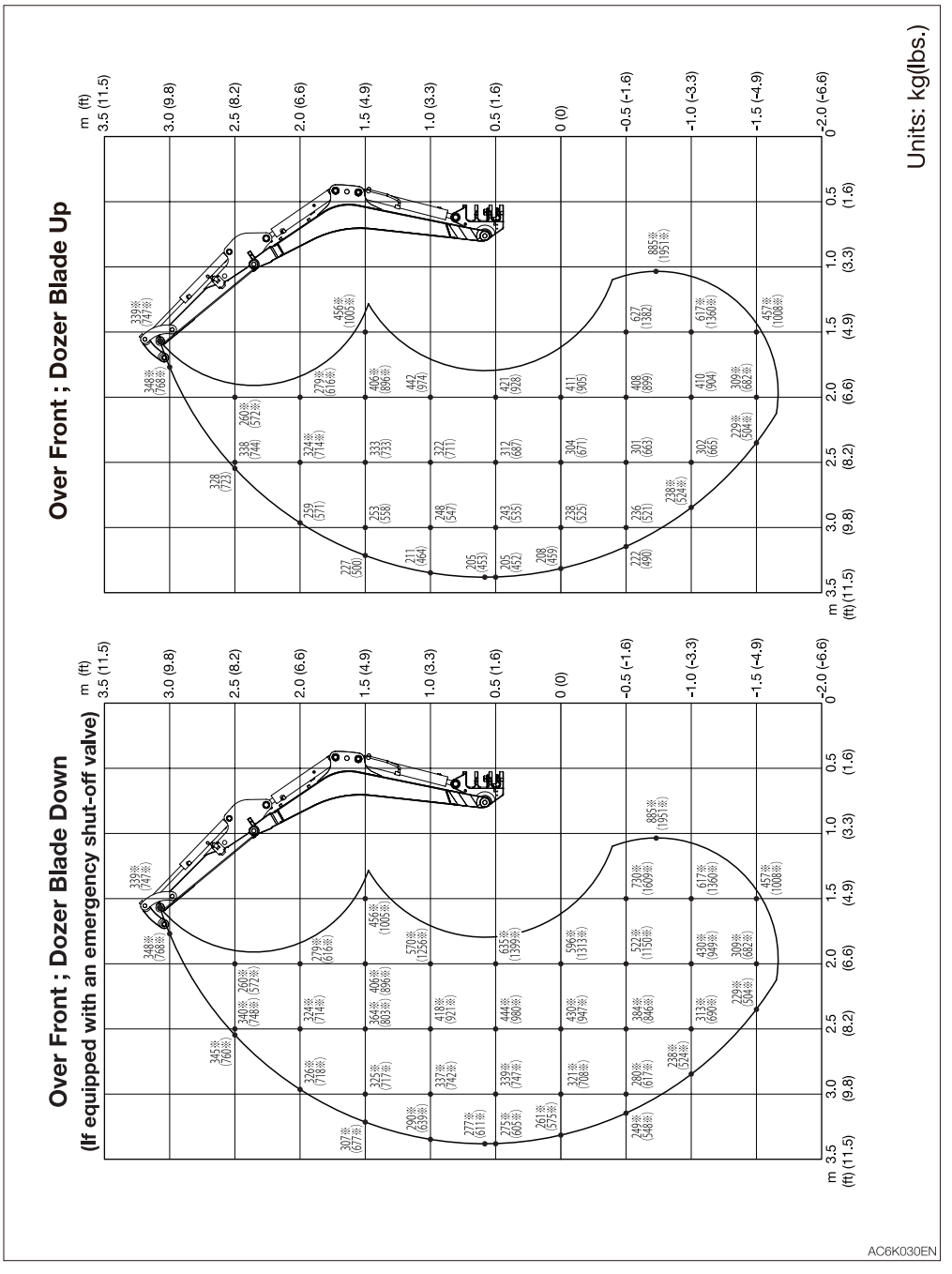

Short arm <Canopy>

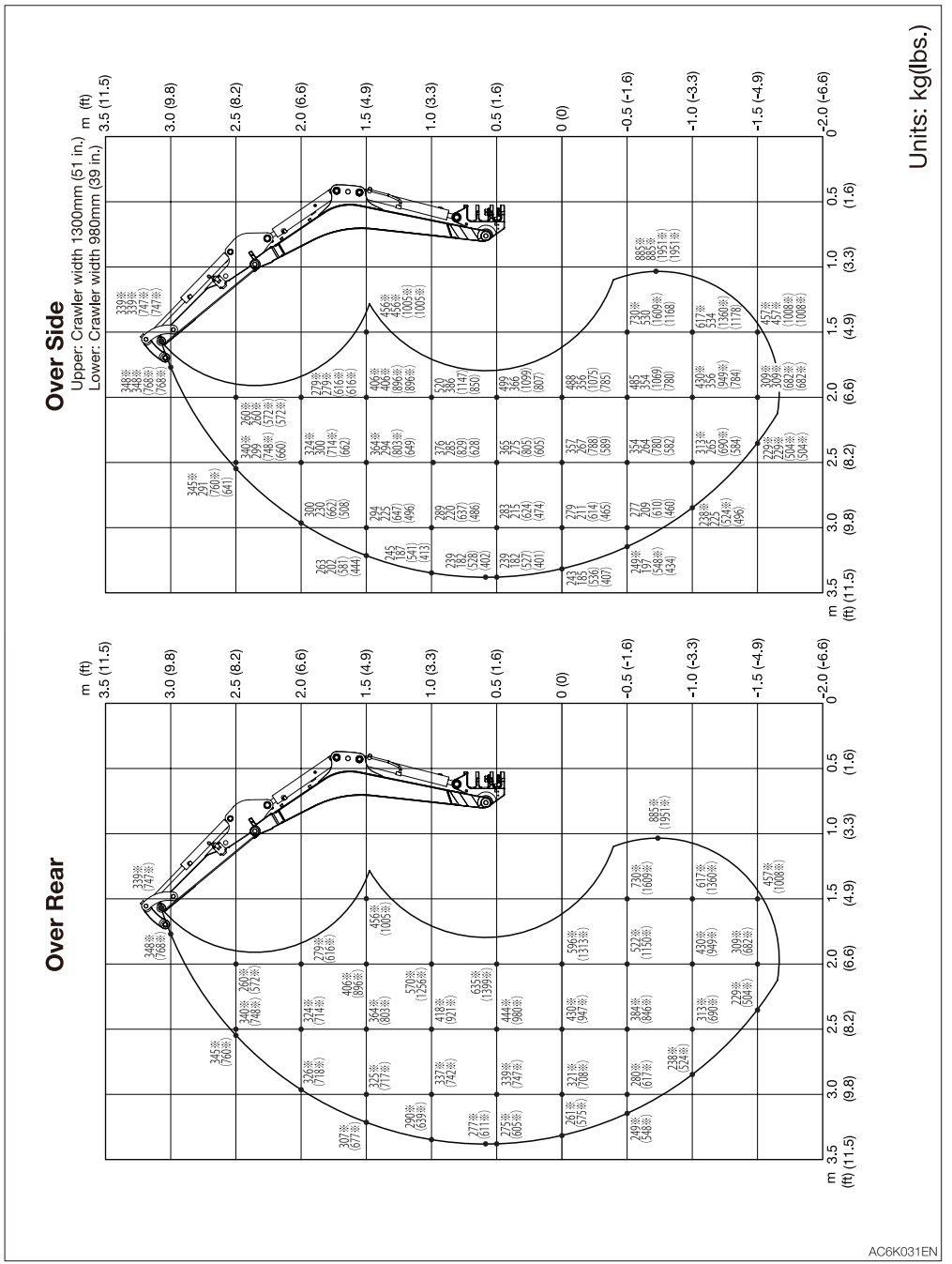

OPTIONS

GENERAL PRECAUTIONS

SAFETY PRECAUTIONS

⚠ WARNING

When removing or installing an attachment or optional part, take the following precautions.

- Consult with Takeuchi before installing an optional attachment.
- Do not use any attachments not approved by Takeuchi. Doing so may cause safety problems. Or, it may adversely affect the machine's operation or service life.
- We will not be held responsible for any injuries, accidents or damage to its products caused by the use by a non-approved attachment.
- Select a firm, level work area. Also, be sure to park in a well ventilated place.
- Clear obstacles and dangerous objects, and clean up spilled fuel immediately.
- When lifting, be sure to designate a person to act as a signalman. Follow the instructions of the signalman regarding the procedure and measures.
- When it is necessary to temporally place a heavy object or an attachment on the ground during removal or installation, be sure to place it in a stable position.
- Keep everyone out of the area when lifting. There is a hazard of objects falling or contacting with people in the area.
- Use a crane to move heavy objects (25 kg (55 lb.) or greater).
- Before removing a heavy object, be sure to put a support to it. When lifting with a crane, pay attention to the center of gravity of the load to keep the machine in balance.
- Do not operate the machine while the load is lifted by a crane stand.
- Use the proper procedure when mounting a boom or arm; otherwise serious damage could result. Consult your sales or service dealer for help.

CAUTIONS WHEN INSTALLING ATTACHMENTS

Be sure to perform a test operation after an optional or other special attachment has been replaced. Inspect the hydraulic oil level and recharge it as necessary. Consult your sales or service dealer for detailed procedures on installing/removing attachments.

CAUTIONS WHEN OPERATING ATTACHMENTS

⚠ WARNING

Long attachments reduce stability of the machine. The machine may tip over if it loses the balance when traveling or slewing on slopes.
Never perform the operations listed below as they are extremely dangerous.

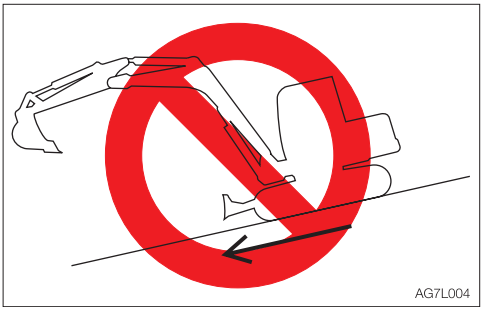

- Traveling down the slopes with the attachment raised



- Traveling across slopes

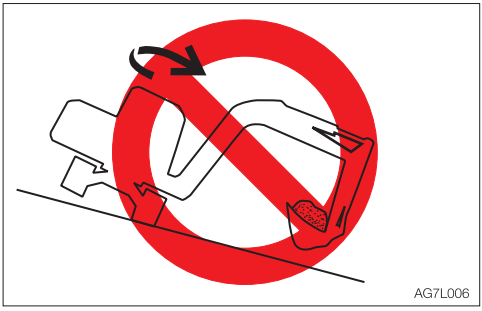

- Slewing on slopes
- If there is a heavy attachment is installed, the machine takes longer distance than usual to come to a complete stop when the stopping operation is performed. Carefully judge the distance so as not to bump into an object around the machine. Keep a safe distance from surrounding obstacles. When a heavy attachment is installed, natural drop (the gradual dropping of the attachment under its own weight when it is stopped in midair) increases.
- The machine can tip over more easily in the lateral direction than in the longitudinal direction.
  - Do not slew sideways with a heavy load at the how attachment. In particular, do not slew sideways on slopes.
  - The attachment is heavier for machines equipped with breakers or crushers than for machines equipped with the standard bucket. Do not operate such machines sideways, especially digging downhill.
- When a long arm is installed, the operating range increases. Carefully judge the distance so as not to bump into an object around the machine. Keep a safe distance from surrounding obstacles.

ATTACHMENT COMBINATION TABLE

The table below shows which bucket should be installed when the machine is using a standard arm or long arm. Select a proper bucket by following the table.

⚠ WARNING

- **Consult with Takeuchi before installing an optional attachment.**
- **Do not use any attachments not approved by Takeuchi. Doing so may cause safety problems. Or, it may adversely affect the machine's operation or service life.**
- **We will not be held responsible for any injuries, accidents or damage to its products caused by the use by a non-approved attachment.**
- **The swing stopper must be mounted when a bucket wider than a 450W bucket is mounted. Failure to mount the swing stopper may result in the bucket hitting the machine body.**

√ :Can be used.
Δ :Can be used only for light operations (digging and loading of dry and loose soil or mud)
— :Cannot be used.

Bucket	Rated capacity m^3 (cu. yd.)	Bucket cutting width mm (inch)	Long arm 1130 mm (44.5 in.)
260W	0.020 (0.026)	265 (10.4)	√
350W	0.027 (0.035)	335 (13.2)	√
450W (Standard)	0.038 (0.049)	435 (17.1)	√
500W	0.043 (0.056)	485 (19.1)	√
3-hole bucket	0.049 (0.064)	457 (18.0)	√
Total bucket mass = Within 127 kg (280 lb.)		Within 485 (19.1)	√
Hydraulic Breaker (TKB-72)			√

SELECTING A LEVER PATTERN

The operating pattern of the left and right operating levers can be changed.

⚠ WARNING

Before starting the engine, check the selector to see which operating pattern the left and right operating levers are set.

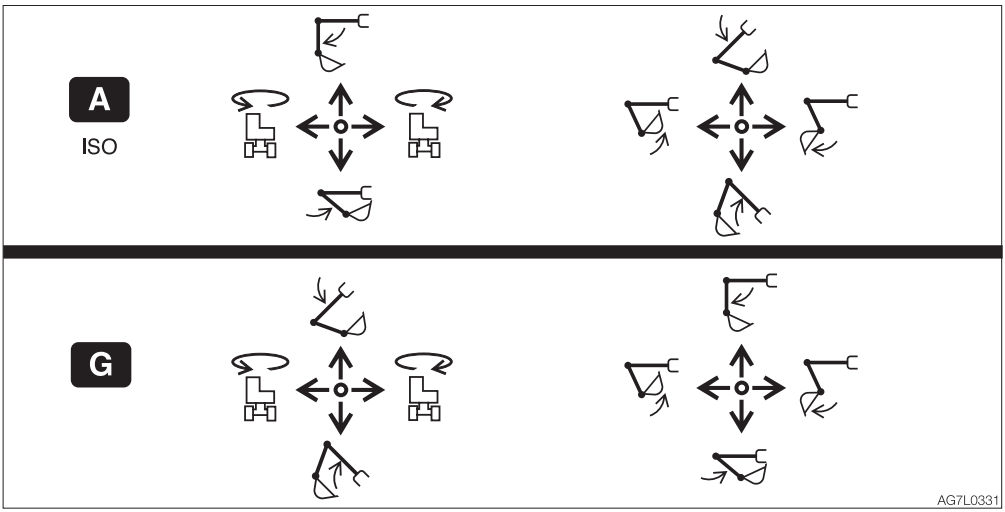

SWITCHING THE LEVER PATTERN

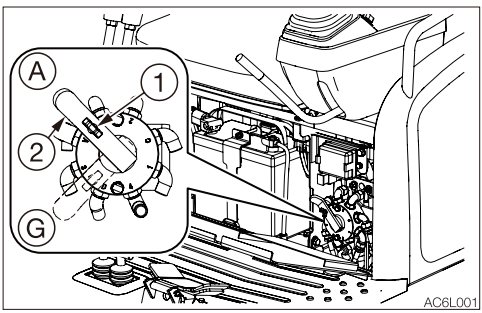

(A) : ISO pattern
(G) : G pattern

1. Park the machine on a flat and rigid ground, and stop the engine.
2. Open the maintenance cover.
3. Loosen the wing bolt (1).
4. Turn the selector valve lever (2) to switch the pattern.
5. Tighten the wing bolt (1) and fasten the lever (2) in place.
6. Close the maintenance cover.
7. Confirm the lever pattern.

HYDRAULIC BREAKER

For handling of the breaker, read the hydraulic breaker's manual, provided separately.

⚠ WARNING

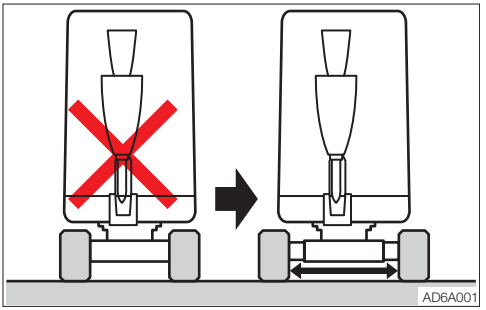

Do not use the breaker when the crawler width is narrowed!

- **Always operate the machine with the crawler width extended to 1300 mm (51.2 in.) to maximize the machine stability. If the machine is operated with the crawler width narrowed (980 mm, 38.6 in.), the machine may tip over due to its poor stability.**
- **If the machine must be operated with the narrowed crawler width (980 mm, 38.6 in.), traveling should be done after folding the hoe attachment, lowering the boom to lower the center of gravity and keeping the machine facing forward.**

When an optional attachment, such as a breaker, tilted bucket or clamshell, is operated, be sure that the crawler width is extended to 1300 mm (51.2 in.).

IMPORTANT: When installing an attachment, make sure that it is appropriate for the machine being used. Contact your sales or service dealer for advice on selecting attachments.

Cautions on operating

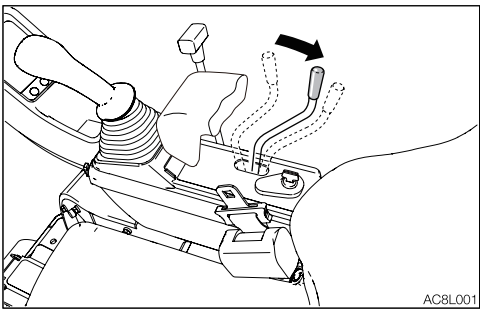

- Start the engine and run it at 75% of the maximum speed.

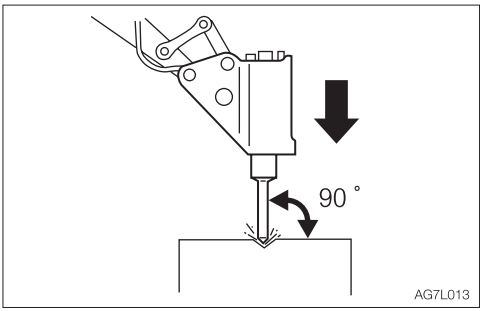

- Pound with the chisel pressed perpendicular to the surface to be pounded.
- When pounding, press the chisel properly against the object to be broken so as to avoid pounding the air.

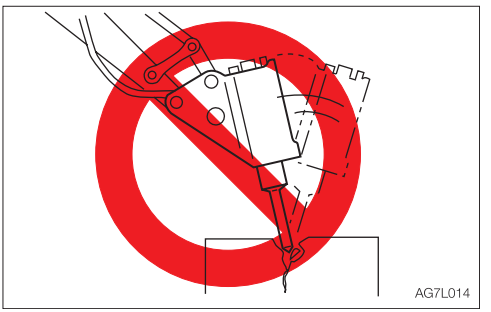

- Do not pry with the chisel or do not pry while pounding.
- Do not move the chisel while pounding.
- Do not pound continuously for over 30 seconds on the same surface.

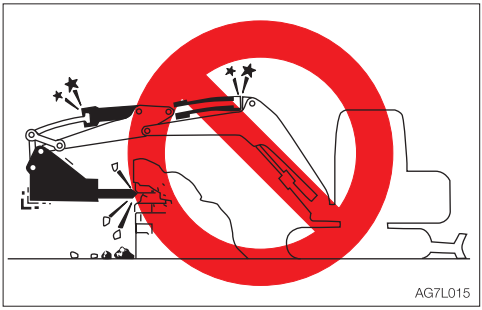

- Do not pound with the cylinder fully extended or retracted (at the stroke end). Leave a margin of at least 50mm(2 in).

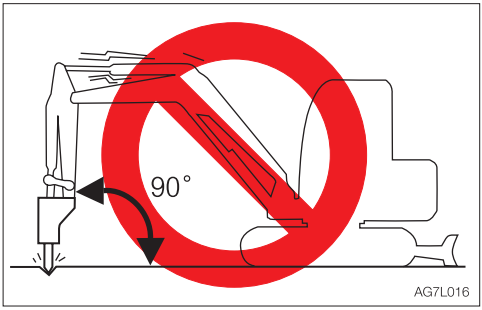

- Do not pound with the arm placed perpendicular to the ground surface.

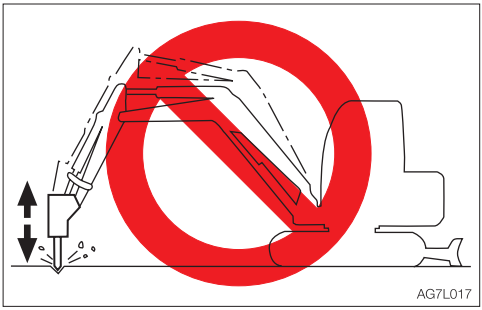

- Do not drop the breaker itself on the object to be broken in order to break it.
- Do not move objects to be broken or rocks with the breaker itself.
- Slew the machine occasionally to cool the engine.
- If a hydraulic hose is vibrating abnormally, nitrogen gas may be leaking from the accumulator. Ask for an inspection early.

REPLACING THE HYDRAULIC OIL REGULARLY

When a hydraulic breaker is used, the oil deteriorates more quickly than that used for a usual operation. Be sure to replace the hydraulic oil and the return filter elements.

- Failure to replace these in time can lead to damage to the machine and the breaker hydraulic system. To improve the service life of the hydraulic systems, be sure to replace the hydraulic oil and return filter element after the number of hours shown on the diagram below.
- When replacing the hydraulic oil, clean the suction strainer.

Replacement interval (hours)

Item	Hydraulic oil	Filter element
1st time	—	25
2nd time	—	100
Periodically	1200 (600)	200

When the breaker operating ratio is 100%.

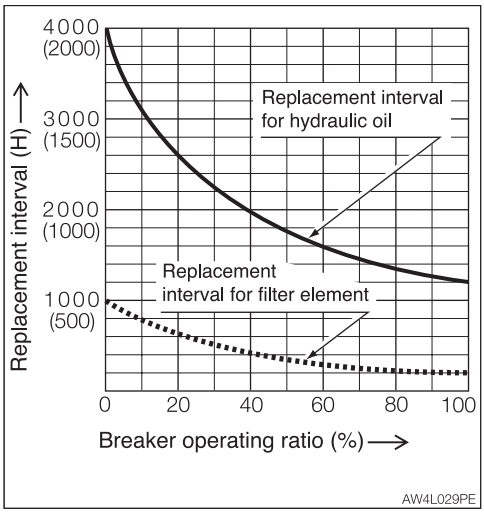

( ): When using conventional antiwear hydraulic oil.

LIFTING SAFETY DEVICE

The Lifting safety devices include an emergency shut-off valve and an overload warning device. The emergency shut-off valve prevents the boom or arm from falling. The overload warning device sounds an alarm when an excessive load is detected.

EMERGENCY SHUT-OFF VALVE

If the boom or arm cylinder hose for lifting is ruptured, the emergency shut-off valve is activated to prevent the boom or arm from falling rapidly.

⚠ WARNING

- **If the boom or arm falls and the emergency shut-off valve is activated, immediately move away from the load being lifted.**
- **If the emergency shut-off valve hose breaks, immediately stop operation.**
- **Since the emergency shut-off valve (1) and (2) is a safety device, you must not disassemble it and/or replace or adjust its internal part. Takeuchi shall not be held responsible for any injuries, accidents or product malfunction caused by disassembly.**

Boom

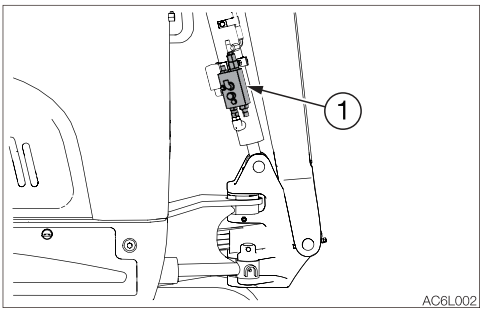

Arm

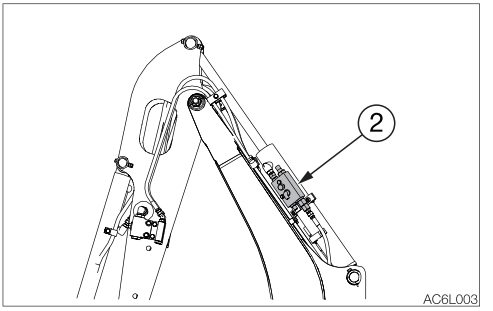

If the emergency shut-off valve (1) or (2) is activated, immediately set the operating levers to the neutral position. Do not move the operating lever to the boom or arm lowering side. Ask your sales or service dealer for repair.

If the engine can be started without problems, the boom or arm can be lowered with the operating lever. Slowly lower the boom or arm while ensuring safety.

If the engine fails to start, lower the boom or arm by performing the following steps.

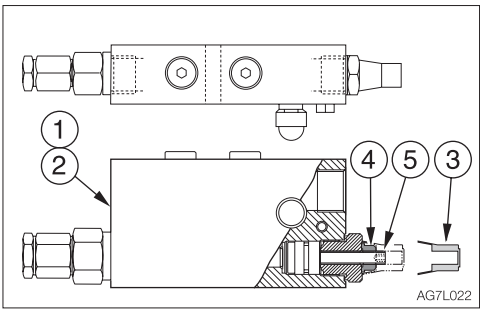

1. Check that the load being lifted and the machine are secure and the work area is safe.
2. Remove the cap (3).
3. Loosen the lock nut (4).
4. Tighten the stem (5) slowly to lower the boom or arm.
5. Check that the load and the hoe attachment are secure.
6. Loosen the stem (5) and secure it with the lock nut (4).

OVERLOAD WARNING DEVICE

If a weight greater than the lifting capacity is applied or lifted, the overload warning device is activated and the horn sounds. (When the lift overload warning switch is turned on.)

⚠ WARNING

If the overload is not removed after the overload warning horn is sounded, the machine may tip over or the emergency shut-off valve may be activated. If the horn starts sounding, stop operating the machine and lighten the load.

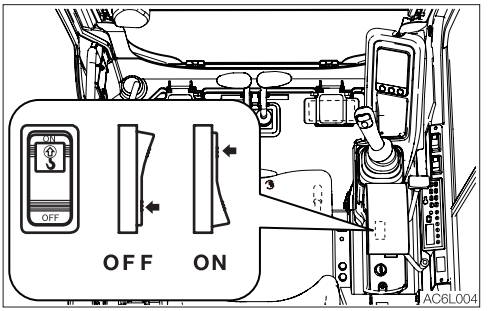

TRAVEL ALARM

The alarm sounds while the machine is traveling and stops when the machine stops traveling.
If the alarm does not sound when the machine travels, the fuse may be blown. Inspect the fuses.

⚠ WARNING

If the fuse blows again soon after replacement, then the electric system is likely faulty. It may pose a fire hazard if not properly repaired. Contact your sales or service dealer for advice.

1. Turn the starter key to the OFF position to stop the engine.
2. Open the maintenance cover.

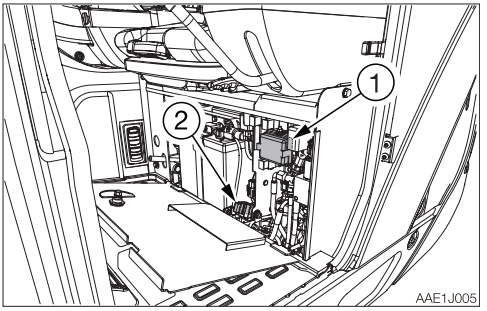

3. Open the fuse box cover (1).
4. Check for fuse.

Note: Inspect the fuse box (2) too if it is provided.

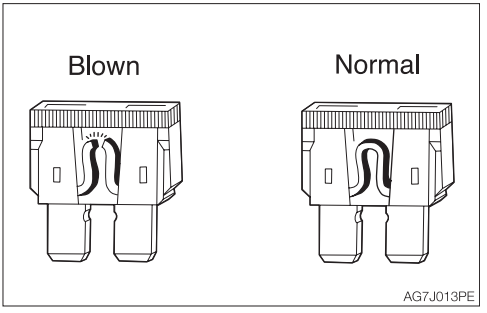

5. If a fuse is blown, replace it with a spare fuse of the same capacity.

Fuse layout and circuits protected (1)

<Applicable machine models 216000002 or later>

Capacity	Protected circuit	Capacity	Protected circuit
25A	Reserve		
10A	Cluster	**20A**	Light
10A	Horn	**5A**	Lever lock
25A	Cab interior power supply (Cab)	**10A**	Third auxiliary hydraulic
15A	Feed pump	**15A**	Option (1) **Travel alarm**
15A 20A*	Heater (Cab)	**25A**	Engine power source

*: If equipped

<Applicable machine models 216100002 or later>

Capacity	Protected circuit	Capacity	Protected circuit
25A	Controller		
10A	Cluster	**20A**	Light
10A	Horn	**5A**	Lever lock
		10A	Third auxiliary hydraulic
15A	Feed pump	**15A**	Option (1) **Travel alarm**
25A	Highland mode	**25A**	Engine power source

Fuse layout and circuits protected (2)*

Capacity	Protected circuit
20A	Rear defroster

*: If equipped

MEMO

OPTIONAL EQUIPMENT MASS

OPTION		
Steel crawlers		50 (110)
With hydraulic thumbs		120 (265)
Emergency shut-off valve	Boom + Arm	10 (20)

Units: kg (lb)

*: Mass of optional equipment is added to the standard machine mass.
*: This table only contains the optional equipment of 10kg (20lb) or more in mass.

BIODEGRADABLE OIL

Biodegradable oil is a new type of hydraulic oil that is decomposed into carbon dioxide and water by microorganisms in the soil and water. It is highly safe for living organisms and offers advantages in term of environmental protection.

- Recommended biodegradable oil: Mobile EAL Envirosyn 46H (an ester synthetic oil) and Panolin HLP Synth 46 (an ester synthetic oil).
  When replacing the mineral oil with biodegradable oil, use either of the above brand oil.
  Note that there are oils of other brands, even among ester synthetic oils, which may damage O-rings, packings and seals.
- When switching from a mineral oil to a biodegradable oil, the parking brake torque decreases by about 30%.

REPLACING THE MINERAL OIL WITH BIODEGRADABLE OIL

- A mixture of mineral oil and biodegradable oil or a mixture of different brands of biodegradable oils will result in a decrease in performance of the hydraulic oil, biodegradability and safety. The inside of the hydraulic oil system must be flushed (cleaned) before replacing. The residual mineral oil in the machine should be about 2% or less, as complying with the ISO 15380.
- This operation is dangerous and requires experience. Ask a Takeuchi sales or service dealer for help.

Flushing

To be performed by a Takeuchi sales or service outlet

1. Drain the hydraulic oil (mineral oil) from the hydraulic oil tank and clean the inside of the tank and suction strainer.
   Refer to “Replacing the hydraulic oil and cleaning the suction strainer” on page 5-48.
2. Remove the cylinder hoses and drain the hydraulic oil (mineral oil) from inside the cylinders.
3. Supply new biodegradable oil to the hydraulic oil tank.
4. Bleed the air from the hydraulic oil system.
5. Operate the hydraulic devices for 30 minutes.
6. Drain the biodegradable oil from the tank and cylinders.
7. Replace the hydraulic oil return filter with a new filter.
8. Repeat steps 3 and 4.
9. Operate the hydraulic devices for 30 minutes.
10. Drain the biodegradable oil from the tank and cylinders.
11. Repeat steps 3 and 4.
12. Operate the hydraulic devices for 1 hour.
13. Drain the biodegradable oil from the tank and cylinders.
14. Replace the return filter with a new filter.
15. Repeat steps 3 and 4.
16. Operate the hydraulic devices, then check for oil leakage.

There is no need to flush the hydraulic oil system when switching from biodegradable to mineral hydraulic oil.

CAB OPTIONS

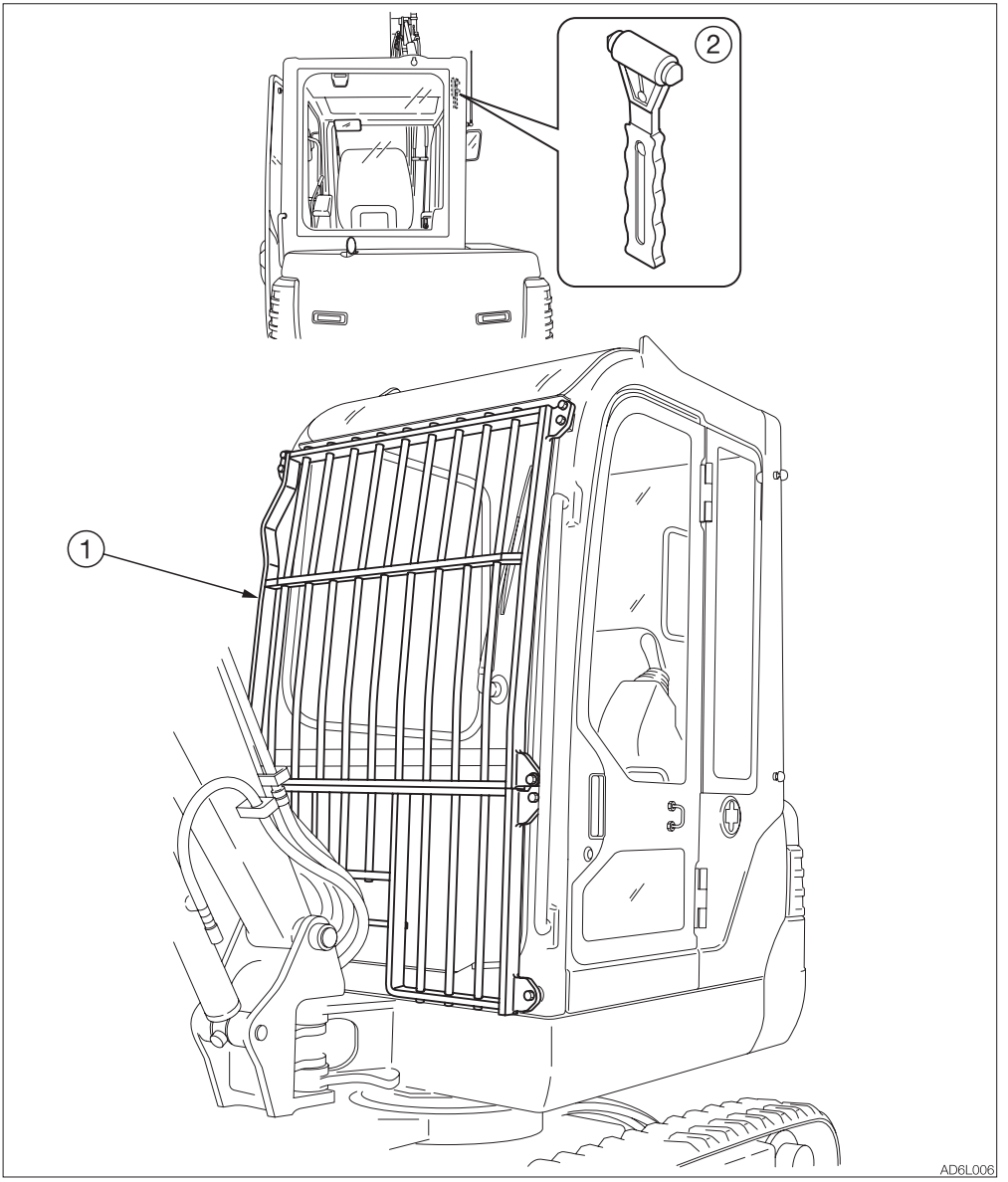

1. Front guard
2. Emergency hammer

TAKEUCHI SECURITY SYSTEM

The Takeuchi Security System is a system that allows only registered starter keys to be used for starting the engine.
The engine cannot be started with any unregistered or counterfeit starter keys. If a registered starter key is lost or stolen, you can set the system to delete the registered key information, so that the lost or stolen key cannot be used to start the engine. Although machine theft cannot be completely prevented, the system certainly helps reduce the risk of theft.

STARTER KEY

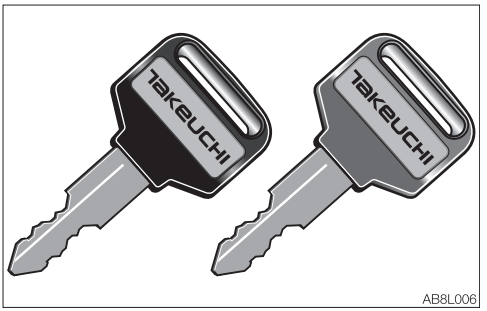

There are two types of starter key, red and black, which can be registered in the Takeuchi Security System.
The red key is the master key. The black key is the starting key.

STARTING THE ENGINE

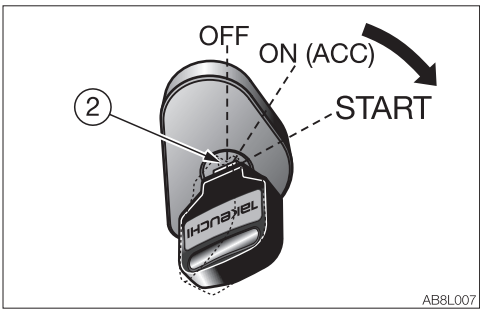

The engine can be started using the normal method with a registered BLACK key.
The engine cannot be started using the RED master key.
Refer to Chapter 3, “Starting and stopping the engine”.

If an attempt is made to start the engine with an unregistered key:

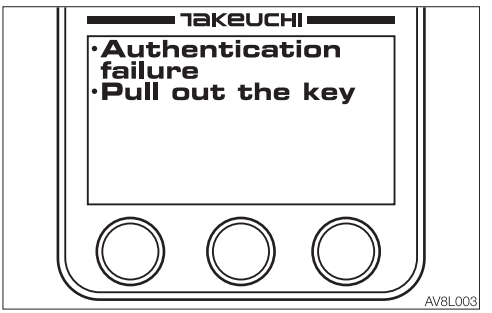

If an unregistered starter key is turned from the OFF to the ON (ACC) position, the message “Authentication failure” appears and the alarm starts sounding.
If this attempt is repeated five times in a row, the horn sounds for two minutes, and the engine cannot be started. The horn stops when the key is turned to the OFF position.

REGISTERING AND DELETING THE STARTER KEY

⚠ WARNING

- **Sit on the operator's seat.**
- **Raise the safety lock lever to the locked position.**
- **Clear all people from the machine and the area.**
- **Sound the horn to warn people around the machine.**

Registration may fail if the starter key is on a keyring or keychain; remove it before starting registration.
A malfunction could occur if multiple starter keys are brought near to the key cylinder. Be sure that no starter keys other than the correct key are near the key cylinder during registration.

Starter key registration procedure
For Steps 1 to 6 below, complete each step and proceed to the next one within five minutes. If no operation is performed for five minutes during this procedure, the system returns to the initial state.
From Step 7 onward, the system automatically ends the operation if no operation is performed for five minutes.

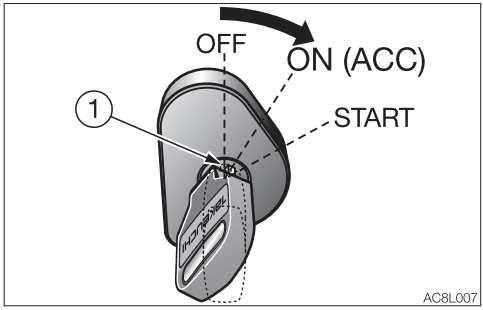

1. Insert the master key (1) into the starter switch and turn the key from the OFF to the ON (ACC) position.

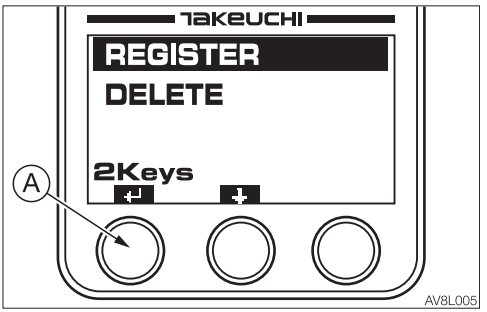

2. On the LCD, select “REGISTER” and press (A).

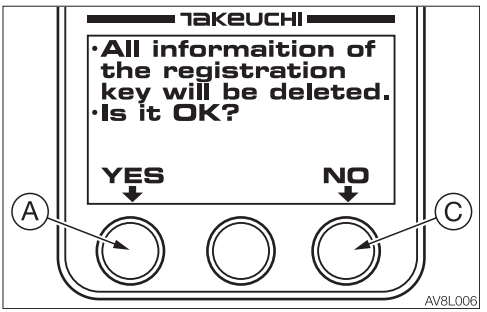

3. Select whether to delete all of the existing registration information.
   YES (A): All registration information will be deleted; register a new key.
   NO (C): A new starter key registration will be added to the existing registration information.
   Do not remove the master key (1) before making a selection, otherwise registration could fail.

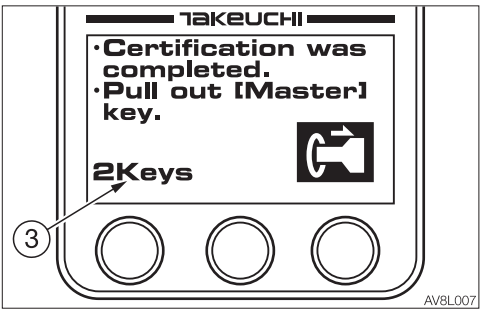

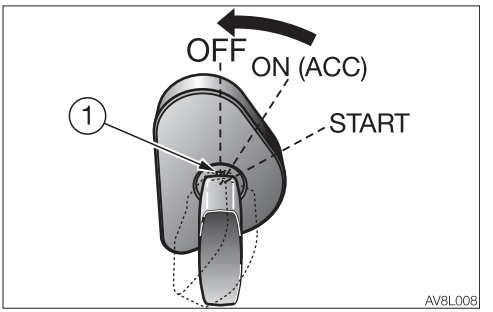

4. When the message “Certification was completed” appears on the LCD, turn the master key (1) from the ON (ACC) to the OFF position, and then remove it from the starter switch.
   The number (3) in the lower left indicates the number of starter keys currently registered. Up to 13 starter keys can be registered.

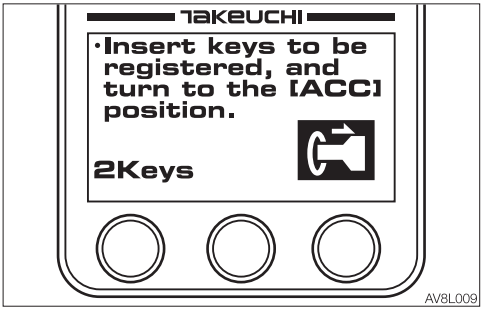

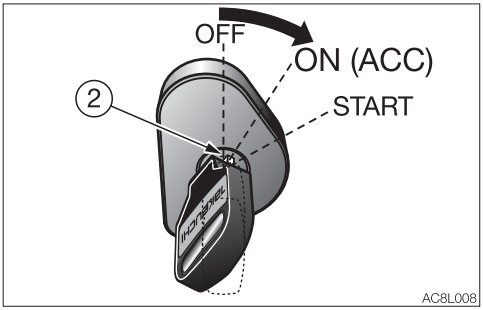

5. Insert the starter key (2) to be registered into the starter switch and turn the key from the OFF to the ON (ACC) position.

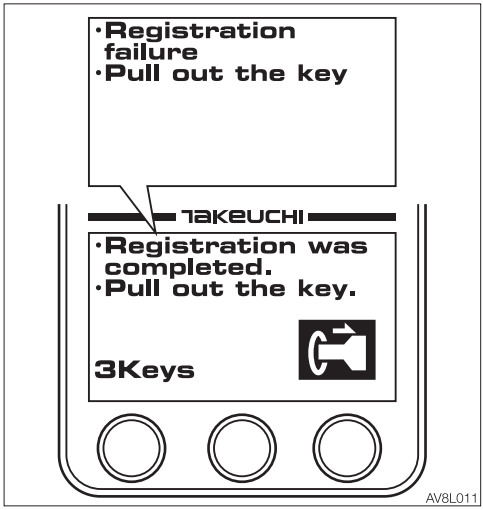

6. If the registration was successfully completed, the message “Registration was completed” appears. This means that the starter key (2) currently inserted has been registered.
   If the registration fails, the message “Registration failure” appears.

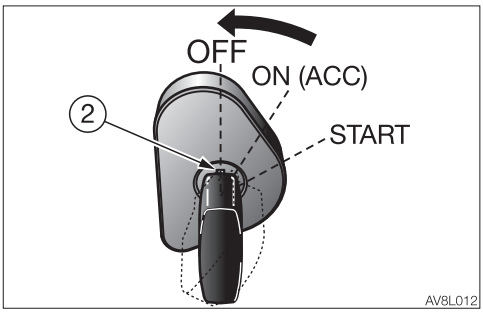

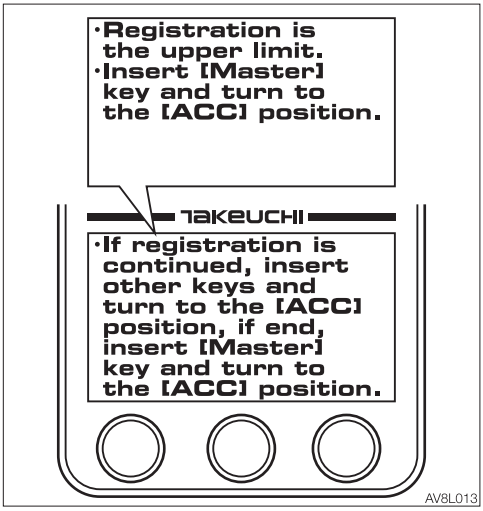

7. Turn the starter key (2) from the ON (ACC) to the OFF position, and then remove it from the starter switch.
   To continue registration, repeat the steps from Step 5.
   To end registration, proceed to Step 8.

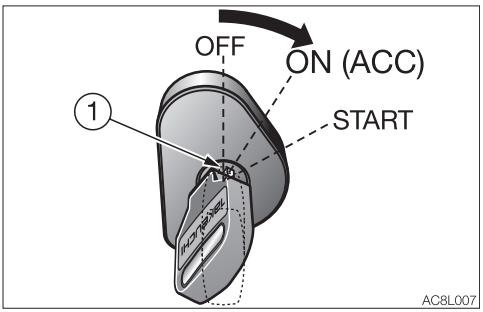

8. Insert the master key (1) into the starter switch and turn the key from the OFF to the ON (ACC) position. Or, wait for five minutes or more.

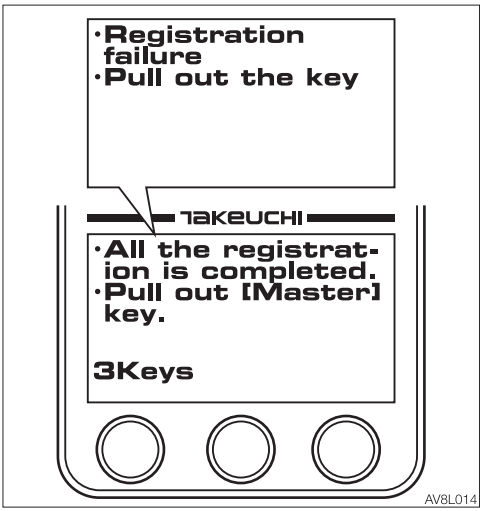

9. If any starter key has been registered, the message “All the registration is completed” appears. Turn the master key (1) from the ON (ACC) to the OFF position, and then remove it from the starter switch to complete the registration.
   If no starter key has been registered, the message “Registration failure” appears, and the registration information is returned to the initial state.

Deleting a registered starter key
The information of each registered starter key can be deleted to cancel its ability to start the engine.

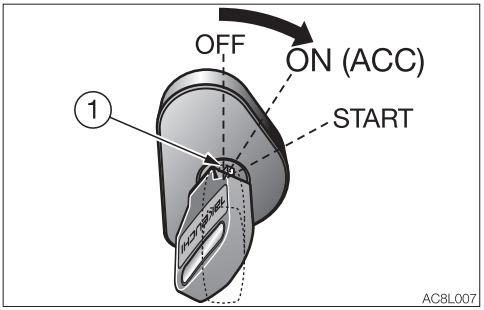

1. Insert the master key (1) into the starter switch and turn the key from the OFF to the ON (ACC) position.

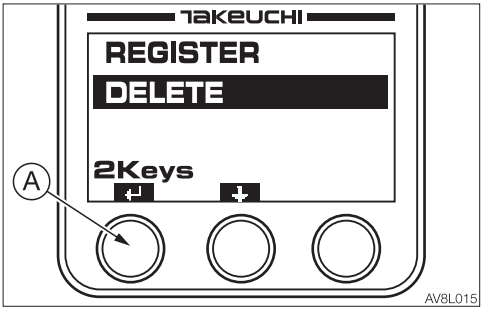

2. On the LCD, select “DELETE” and press (A).

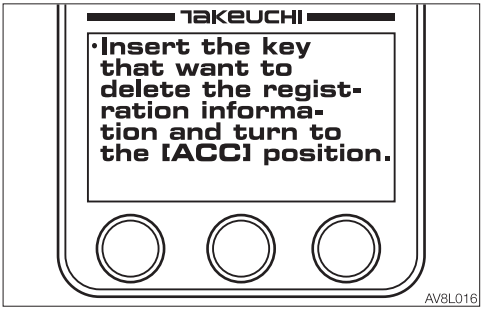

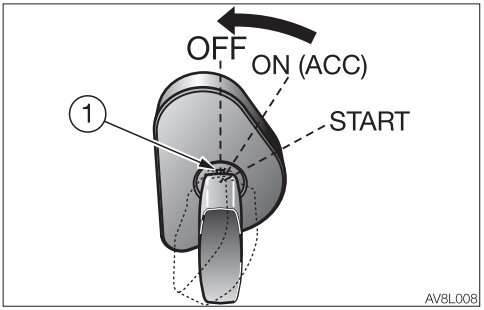

3. When the display shown as the illustration appears on the LCD, turn the master key (1) from the ON (ACC) to the OFF position, and then remove it from the starter switch.
Note: If the registered key is lost and you want to delete all registration information, please refer to STEP 3 (A) on page 8-18.

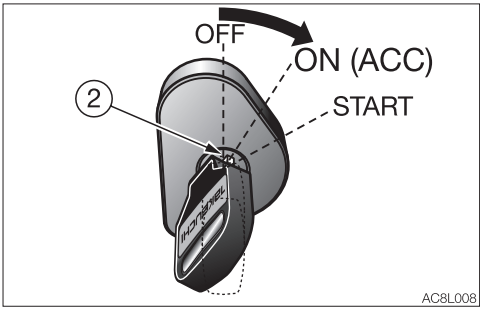

4. Insert the starter key (2) to be deleted into the starter switch and turn the key from the OFF to the ON (ACC) position.

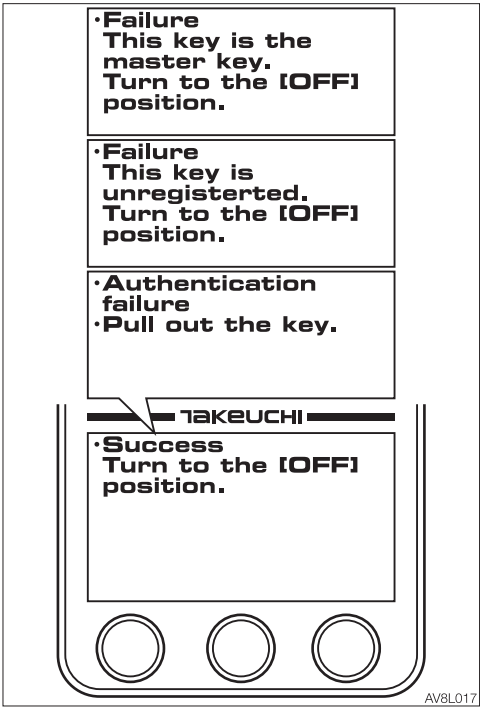

5. If the deletion is successful, the message “Success” appears. This means that the information registered for the starter key (2) currently inserted has been deleted. If the deletion fails, the message “Failure” or “Authentication failure” appears on the LCD. Remove the starter key, and then repeat the steps from Step 1 again.

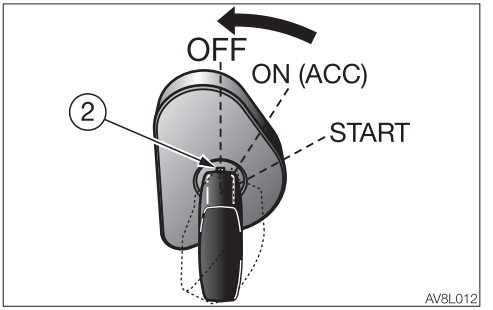

6. Turn the starter key (2) from the ON (ACC) to the OFF position, and then remove it from the starter switch.
To continue deletion, repeat the steps from Step 1.

IF THE MASTER KEY IS LOST

If you lose your master key, contact your service or sales dealer for assistance.

COUNTRIES WHERE THE SYSTEM CAN BE USED

To use the Takeuchi Security System, “radio wave authentication” must be obtained in the country where the system is to be used. The system can be used in the countries listed below, as of January 2017. Do not use the system in other countries. For details on how to disable the system, please contact your service or sales dealer for assistance.

Countries where the system can be used:
Ireland, Italy, UK, Estonia, Austria, Holland, Cyprus, Greece, Croatia, Sweden, Spain, Slovakia, Slovenia, Czech, Denmark, Germany, Hungary, Finland, France, Bulgaria, Belgium, Poland, Portugal, Malta, Latvia, Lithuania, Rumania, Luxemburg, Iceland, Norway, Liechtenstein, Switzerland, Turkey

TAKEUCHI FLEET MANAGEMENT (TFM)

⚠ CAUTION

- **Never disassemble the TFM. It may cause injury or failure.**
- **Any damage to the TFM device or wire harness may cause damage to the device and surrounding equipment.**



- Takeuchi Fleet Management (TFM) is a system that manages machine position information, operation information, and machine status using a communication device installed in the machine.
- Machines that support TFM are equipped with communication devices and are labeled as above.
- A communication contract is required to use TFM. Please contact our sales service for information regarding the contract.

IMPORTANT:

- **The TFM equipment has been tested and found to comply with the limits for a Class A and Class B digital device, pursuant to part 15 of the FCC Rules. These limits are designed to provide reasonable protection against signal interference when the equipment is operated in a commercial environment. This equipment generates, uses, and can emit radio frequency energy and, if not installed and used in accordance with the instruction manual, may cause signal interference to radio communications.**
- **Operation of this equipment in a residential area may cause signal interference in which the user may be required to take additional steps to correct the interference. To correct any interference issue, move the TFM equipped machine away from the affected device, or, if possible; relocate the affected device away from the TFM equipped machine.**
- **The TFM device uses mobile communication. Therefore, it may not function properly in places where the signal is weak (buildings, tunnels, underground, etc.).**
- **The TFM device complies with the RF radiation exposure limits of the FCC Rules. The product is tested for a separation distance of 0 mm from human bodies. It is advised for those with specific sensitive conditions to avoid close device-body exposure.**
- **Please be aware that storing a machine long-term may result in the loss of communication from the TFM device if its internal battery is drained.**
- **The TFM device consumes a small amount of machine battery power even when the key is in the OFF position. For extended storage, see “Maintenance during extended storage period” on page 5-58.**

Specification

Applicable machine models 216000002 to 216017279
Applicable machine models 216100002 or later

M8HZT-E (For Europe)

Frequency	Power
UMTS:	
900 MHz	0.316 W
1900 MHz	0.316 W
GSM:	
900 MHz	2 W
1800 MHz	2 W

M8LZT-E (For North America)

Frequency	Power
LTE:	
700 MHz	0.2 W
850 MHz	0.2 W
1700/2100 MHz (AWS)	0.2 W
1900 MHz	0.2 W
UMTS:	
850 MHz	0.224 W
1900 MHz	0.224 W
1700/2100 MHz (AWS)	0.224 W

Applicable machine models 216017280 or later

M7H (For Europe)

Frequency	Power
UMTS/HSPA:	
900 MHz	0.25 W
2100 MHz	0.25 W
GSM/GPRS:	
900 MHz	2 W
1800 MHz	1 W
GSM/EDGE:	
900 MHz	0.5 W
1800 MHz	0.4 W

M7L (For North America)

Frequency	Power
LTE Band:	
700 MHz	0.2 W
850 MHz	0.2 W
1700 MHz (AWS)	0.2 W
1900 MHz	0.2 W
UMTS Band:	
850 MHz	0.25 W
1900 MHz	0.25 W

M7MG

Frequency	Power
LTE Band:	
700 MHz	0.2 W
850 MHz	0.2 W
1700 MHz (AWS)	0.2 W
1900 MHz	0.2 W
UMTS Band:	
850 MHz	0.25 W
1900 MHz	0.25 W

CONDITIONS FOR USE OF BIO-DIESEL FUEL (B8 TO B20)

The fuel hose and the O-rings used in the machine must be compatible with bio-diesel fuel (B8 to B20). Contact your sales or service dealer to check whether the machine specifications are compatible with bio-diesel fuel.

Recommended bio-diesel fuel

- When using bio-diesel fuel (B8 to B20), select a product that meets any of the following standards:
  - European Standards: EN14214
  - American Standards: ASTM D-6751
  - Japanese Standards: JIS K 2390
  - Indonesian National Standard: 723K/10/DJE/2013
- Bio-diesel fuel of up to B20 blends must be used within three months from the date of production.

Inspection and maintenance

- Perform inspection and maintenance on the following items using a shorter interval than usual (the running time between cycles is halved):
  - Replacing the engine oil and oil filter
  - Replacing the fuel filter (cartridge type)
  - Cleaning the water separator
  - Draining the water from the fuel tank
- Inspect, clean and adjust the fuel injection equipment every 1000 hours.
- If the engine oil inspection shows that the level is higher than the previous day, replace the engine oil.
- Perform inspection and maintenance on other items using the normal procedures.

Operating environment

Use bio-diesel fuel in an appropriate operating environment for the engine as described in this manual. Do not use it where the temperature falls below 0°C.

Extended storage time

When storing a machine for a long time without running the engine, the bio-diesel fuel must be completely drained. Run the machine with light oil for five hours, and then proceed as described in this manual.

First Published August 2013
Thirty-seventh Published August 2025

AC6EN036

OPERATOR'S MANUAL

TB216 Mini excavator

Edited and issued by TAKEUCHI MFG. CO., LTD.

Printed in Japan by STATION M Co., Ltd.

ZTR Control Systems, LLC

955 Green Valley Road
London, Ontario, N6N 1E4
Tel: 1-519-452-1233
FAX: 1-519-452-7764

www.ztr.com
info@ztr.com

February 1, 2018

RE: M8HZT / M8HZT-E / M8HBZ / M8HBZ-E Radio Equipment Directives (RED)

To whom it may concern,

This letter is to confirm that ZTR products **M8HZT / M8HZT-E / M8HBZ / M8HBZ-E** sufficiently demonstrate compliance to the Radio Equipment Directives (RED). The M8HZT-E is a superset of functionality of these other three devices and thereby is represented of compliant performance for the other three models.

The results of these tests can be found in **EMC Test Report (EMC_SL17052501-CAL-004-TTU4531HEW)**, issued on June 20, 2017. The tests were carried out by a notarized 3rd party certification lab **Siemic**.

This Declaration of Conformity is issued under the sole responsibility of ZTR Control Systems (or the manufacturer)

Please direct any test results questions or concern to ZTR's Engineering Group for clarification.

Regards,

Brent Horne
Director of Product Development
ZTR Control Systems

ZTR Control Systems, LLC

955 Green Valley Road
London, Ontario, N6N 1E4
Tel: 1-519-452-1233
FAX: 1-519-452-7764

www.ztr.com
info@ztr.com

April 5, 2019

RE: M7H

To whom it may concern,

This letter is to confirm that ZTR product **M7H** sufficiently demonstrate compliance to CE and the Radio Equipment Directives (RED). The M7H satisfies all the technical regulations applicable to the product within the scope of Council Directives 2014/53/EU, 2015/35/EU and 2014/30/EU. The following tests were completed successfully.

EN 60950-1: 2006+A11: 2009+A1: 2010+A12: 2011+A2: 2013
EN62311:2008
ETSI EN 300 328 V2.1.1 (2016-05)
ETSI EN 303 413 V1.1.1 (2017-06)
Draft ETSI EN 301 489-52 V1.1.0 (2016-11)
Draft ETSI EN 301 489-17 V3.2.0 (2017-03)
Draft ETSI EN 301 489-1 V2.2.0 (2017-03)
Draft ETSI EN 301 489-19 V2.1.0 (2017-03)
EN 55032: 2015
ETSI EN 301 511 V12.5.1 (2017-03)
ETSI EN 301 908-1 V11.1.1 (2016-07)
ETSI EN 301 908-2 V11.1.2 (2017-08)

(Title(s) of regulations, standards, etc.)

All essential radio test suites have been carried out.

The tests were carried out by a notarized 3rd party certification lab MiCOM Labs inc.

This Declaration of Conformity is issued under the sole responsibility of ZTR Control Systems (or the manufacturer).

Please direct any test results questions or concern to ZTR's Engineering Group for clarification.

Regards,

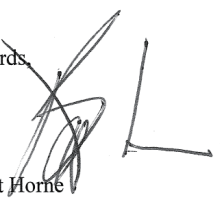

Brent Horne
Director of Product Development
ZTR Control Systems

Trackunit Aps
Gasvaerksvej 24 4.sal, 9000 Aalborg, Denmark
www.trackunit.com

EU declaration of conformity

Hereby, Trackunit Aps declares that the radio equipment type **Trackunit M7MG** complies with the essential requirements of Directive 2014/53/EU.

3.1 (a) protection of health and safety of persons and of domestic animals and the protection of property, including the objectives with respect to safety requirements set out in Directive 2014/35/EU

Standard used: EN 62368-1:2020+A11:2020
EN 62311:2020
EN 62133-2:2012

3.1 (b) adequate level of electromagnetic compatibility as set out in Directive 2014/30/EU

Standard used: EN 301 489-1 V2.2.3
EN 301 489-17 V3.2.4
EN 301 489-19 V2.2.0
EN 301 489-52 V1.2.1

3.2 the equipment is so constructed that it both effectively uses and supports the efficient use of radio spectrum in order to avoid harmful interference.

Spectrum used:	Bluetooth:	2,402 – 2,480 GHz,	Max. 10 dBm EIRP
	Positioning:	1,559 – 1,610 GHz,	Receive only
	Cellular 4G:	B1, B3, B5, B8, B20, B28,	Max. 27 dBm EIRP
	Cellular 2G:	GSM/GPRS/EDGE; 900 / 1800	Max. 33 dBm EIRP

Standard used: EN 300 328 V2.2.2
EN 303 413 V1.2.1
EN 301 511 V12.5.1
EN 301 908-1 V13.1.1
EN 301 908-13 V13.1.1

Complies with the essential requirements of Directive 2011/65/EU and Directive 2015/863/EU on the Restriction of use of certain Hazardous Substances (RoHS 3).

Complies with the essential requirements of the Regulation 1907/2006/EC regarding Registration, Evaluation, Authorization and Restriction of Chemicals (REACh).

Complies with Directive 2012/19/EU on Waste Electrical and Electronic Equipment (WEEE).

Signed for and on behalf of Trackunit Aps
Aalborg, 01 December 2022

DocuSigned by:
Søren Brogaard
DBFCD953D519425...

Søren Brogaard, CEO

ASAHI DENSO

6-2-1 Somejidai, Hamakita-ku, Hamamatsu, Shizuoka 434-0046, Japan

EU DECLARATION of CONFORMITY (DoC)

This declaration of conformity is issued under the sole responsibility of the manufacturer:

Name:	ASAHI DENSO CO.,LTD
Address:	6-2-1 Somejidai, Hamakita-ku, Hamamatsu, Shizuoka, 434-0046 Japan

We declare that the DoC is issued under our sole responsibility and belongs to the following product.

Object of the declaration:

Product Name	Meter panel Immobilizer
Model Name	CZ131,CZ131A
Accessories	N/A

The object of the declaration described above is in conformity with the relevant Union harmonization legislation:

Radio Equipment (RE) Directive (2014/53/EU)

The following harmonized standards and technical specifications have been applied:

Health & Safety (Article 3.1(a)):	EN 60065: 2014
EMC (Article 3.1(b)):	EN 301 489-1 V2.1.1 EN 301 489-3 V2.1.1 (Final draft)
Radio Spectrum (Article 3.2):	EN 300 330 V2.1.1

Japan, Shizuoka	May 29, 2017	Tomohiro Yaguchi
Place of Issue:	Date of Issue:	Tomohiro Yaguchi Section chief Engineering Department

ASAHI DENSO
6-2-1 Somejidai, Hamakita-ku, Hamamatsu, Shizuoka 434-0046, Japan

UK DECLARATION of CONFORMITY (DoC)

This declaration of conformity is issued under the sole responsibility of the manufacturer:

Name:	ASAHI DENSO CO.,LTD.
Address:	6-2-1 Somejidai, Hamakita-ku, Hamamatsu, Shizuoka, 434-0046 Japan

We declare that the DoC is issued under our sole responsibility and belongs to the following product.

Object of the declaration:

Product Name	Meter panel Immobilizer
Model Name	CZ131 CZ131A
Accessories	N/A

The object of the declaration described above is in conformity with the relevant statutory requirements:

STATUTORY INSTRUMENTS 2017 No. 1206 TELECOMMUNICATIONS (The Radio Equipment Regulations 2017)

The following designated standards and technical specifications have been applied:

Health & Safety (Regulation 6.1(a)):	EN 62368-1: 2014
EMC (Regulation 6.1(b)):	EN 301 489-1 V2.1.1 EN 301 489-3 V2.1.1 (Final draft)
Radio Spectrum (Regulation 6.2):	EN 300 330 V2.1.1

Signed for and on behalf of:

Shizuoka, Japan	September 15, 2021	Tomohiro Yaguchi
Place of Issue:	Date of Issue:	Tomohiro Yaguchi Section chief Engineering Department

Declaration of Conformity

We herewith declare that the following named machine, based on its conception and design, and in the form brought into service is in accordance with the relevant, basic safety and health requirements of the following EU directives. In case of any alteration of the machine not coordinated with us, this certificate loses its validity.

Designation of the machine	Compact Excavator
Manufacturer	TAKEUCHI MFG. CO., LTD 205 Uwadaira, Sakaki-machi, Hanishina-gun, Nagano 389-0605, Japan

Model	TB216 <S/N 216000002~>
Engine type	3TNV70-P (e13*2016/1628*2020/1040EV2/D*0040*Δ)
Engine performance	11.5 kW @ 2400 rpm

The machine is in accordance with the requirements of EU directives:

1) Machinery directive: 2006/42/EC and appendix
2) Electromagnetic Compatibility-Regulation 2014/30/EU and appendix.
3) Noise Directive 2000/14/EC (Evaluation procedure according to appendix VI), 2005/88/EC and appendices.
4) Regulations on engine emissions: Regulation (EU) 2016/1628, as last amended by Regulation 2020/1040.

Harmonized norms: EN474-1:2022, EN474-5:2022

Compiler of the technical files:
Romain Loffredi
Takeuchi France S.A.S.
Parc d'Activités des Béthunes
3, avenue de la Mare 95310 SAINT OUEN L'AUMONE,
CS 29258 – SOA

Issued in Sakaki, Japan
Toshiya Takeuchi, President

Declaration of Conformity

We herewith declare that we take full responsibility that the following named machine, based on its conception and design, and in the form brought into service is compliant with the relevant, basic safety and health requirements of the following (UK) enactments. In case of any alteration of the machine not coordinated with us, this certificate loses its validity.

Designation of the machine	Compact Excavator
Manufacturer	TAKEUCHI MFG. CO., LTD 205 Uwadaira, Sakaki-machi, Hanishina-gun, Nagano 389-0605, Japan

Model	TB216 <S/N 216000002~>
Engine type	3TNV70-P (e13*2016/1628*2020/1040EV2/D*0040*Δ)
Engine performance	11.5 kW @ 2400 rpm

The machine is compliant with the following UK enactments:

1) Supply of Machinery (Safety) Regulations 2008 (S.I. 2008/1597)
2) Electromagnetic Compatibility Regulations 2016 (S.I. 2016/1091)
3) Noise Emission in the Environment by Equipment for use Outdoors Regulations 2001 (S.I. 2001/1701)

And the Designated Standards referred to and adopted therein and particularly EN474-1:2022, EN474-5:2022

Compiler of the technical files:
Daniel Bryning (Product Manager)
TAKEUCHI MFG. (UK) Ltd.
Unit E2B, John Boyd Dunlop Drive
Kingsway Business Park Rochdale OL16 4NG

Issued in Sakaki, Japan
Toshiya Takeuchi, President

Declaration of Conformity

We herewith declare that following named machine, based on its conception and design and in the form brought into service is in accordance with the relevant, basic safety and health requirements of the following EU directives. In case of any alteration of the machine not coordinated with us, this certificate loses its validity.

Designation of the machine	Compact Excavator
Manufacturer	TAKEUCHI MFG. CO., LTD 205 Uwadaira, Sakaki-machi, Hanishina-gun, Nagano 389-0605, Japan

Model	TB216 <S/N 216100002~>
Engine type	3TNV74F-SP (e13*2016/1628*2017/656EV2/D*0006*Δ)
Engine power	11.2 kW @ 2400 rpm

The machine is in accordance with the requirements of EU directives:

1) Machinery directive: 2006/42/EC and appendix
2) Electromagnetic compatibility-regulation 2014/30/EU and appendix
3) Noise directive 2000/14/EC (Evaluation procedure according to appendix VI), 2005/88/EC and appendices.
4) Regulations on engine emissions: Regulation (EU) 2016/1628, as last amended by Regulation 2017/656.

Harmonized norms: EN474-1:2022, EN474-5:2022

Compiler of the technical files:
Romain Loffredi
Takeuchi France S.A.S.
Parc d'Activités des Béthunes
3, avenue de la Mare 95310 SAINT OUEN L'AUMONE
CS 29258 – SOA

Issued in Sakaki, Japan
Toshiya Takeuchi, President

 **WARNING:** Breathing diesel engine exhaust exposes you to chemicals known to the State of California to cause cancer and birth defects or other reproductive harm.

- Always start and operate the engine in a well-ventilated area.
- If in an enclosed area, vent the exhaust to the outside.
- Do not modify or tamper with the exhaust system.
- Do not idle the engine except as necessary.

For more information go to www.P65warnings.ca.gov/diesel.



WARNING:

Cancer and Reproductive Harm –
www.P65Warnings.ca.gov