E. Alarm



Displays the clock symbol when the alarm function is turned on. Refer to “Alarm setting” on page 2-43.

6. Function indicators (Page 2)

When the (A) key is pressed, the display changes as the following.

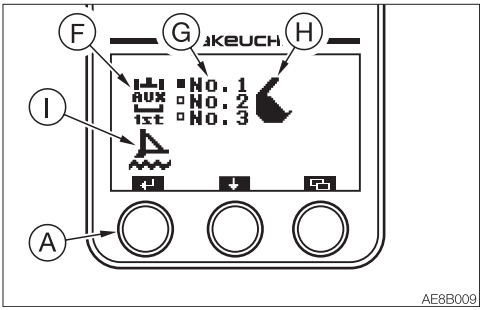

F. Auxiliary 1st indicator

G. Auxiliary 1st flow rate selection indicator

Press the (B) key to move the ■ and select the desired flow rate.
Refer to “Auxiliary 1st Flow Rate Setting” on page 2-46.

H. Attachment symbol indicators

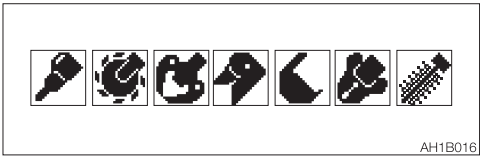

Displays the symbol of the attachment selected in the “Auxiliary 1st Flow Rate Setting” section.

I. Dozer blade float indicator

Displays the symbol of the dozer blade float when the float button is pressed.

7. Warning indicators (Page 3)

When the (A) key is pressed, the display changes as the following. If there is no warning, the screen returns to the “Functions” on Page 1.

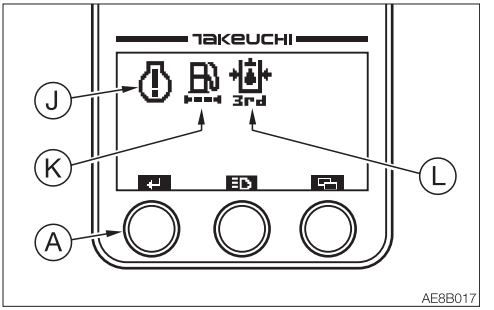

Warning display is first flashed and enlarged for three seconds and then stays displayed, if there is a problem with the machine. If multiple warnings are to be displayed, the highest priority warning is displayed. Priority from the highest to the lowest: ECM error warning, Auxiliary 3rd hydraulic pressure warning, water separator warning and fuel filter warning.
No enlarged display for the maintenance warning.
Go to the “MAINTENANCE/FAILURE RECORD/Error code display” from the Side menu screen, get the vehicle or engine error code number, and consult your sales or service dealer referring to the “Vehicle error code list” or “Engine error code list” in this manual.

J. ECM error warning indicator
This warning lamp flashes if the Electronic Control Module (ECM) detects an engine problem while the starter switch is in the ON position. The problem detected is recorded as an ECM error.
Refer to “Engine error code list” on pages 6-14 to 6-16.

K.Fuel filter warning indicator
This lamp flashes and an alarm is sounded if the fuel filter is clogged while the engine is running.

L. Auxiliary 3rd hydraulic pressure warning indicator (If equipped)
This warning lamp starts flashing and an alarm sounds if the pressure in the fixed side (left “e”) of the Auxiliary 3rd drops abnormally while the engine is running, or while the quick-hitch is being used for changing the bucket.

FUNCTION OF EACH KEY

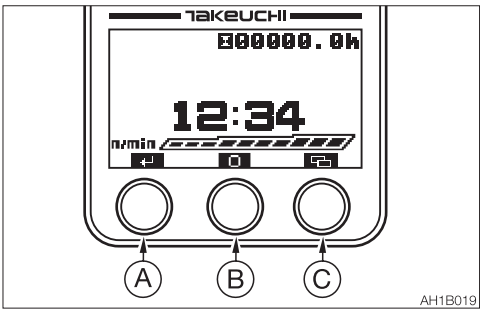

The functions are as below in the Home screen. The different functions appear in the other screens.

A. Stopping the alarm or switching the display between Functions and Warnings

- Pressing the (A) key while the alarm is sounding stops the alarm.
- Pressing the (A) key to switch the display; Functions (Page 1), Functions (Page 2), and Warnings (Page 3).

B. Meter switching

Pressing and holding the (B) key for two seconds or more each time the display changes as follows:

1. Hour meter

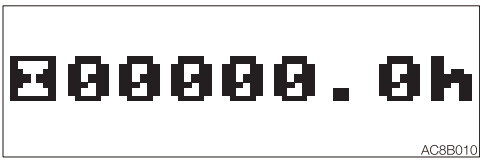

2. Trip meter 1

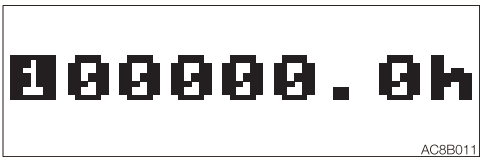

3. Trip meter 2

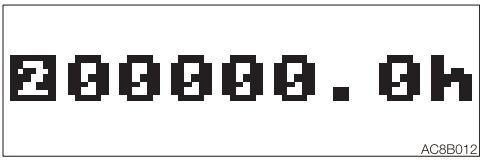

4. Trip meter 3

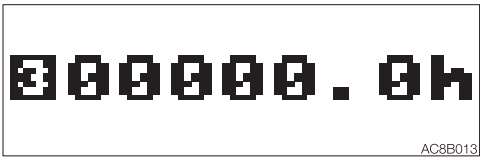

5. Returns to the hour meter

- When the (B) key is pressed, the display changes in the following order.

1. Engine RPM



2. PM accumulation rate



3. Lift load factor



4. Return to the engine RPM.

C. Menu/trip meter reset

- Pressing the (C) key switches to the Menu screen.
- Pressing and holding the (C) key for three seconds or more while the trip meter is displayed returns the trip meter to “0”.

MENU SCREEN

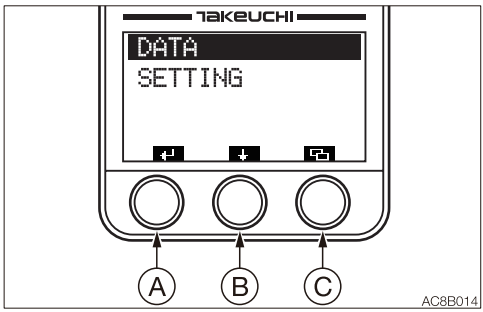

Press the (A) key to proceed to the screen selected by the bar.
Press the (B) key to move the selection bar.
Press the (C) key to return to the Home screen.

- DATA
  The trip meter for maintenance, battery and auxiliary circuits can be checked. Unlike the trip meter displayed on the Home screen, data items on the engine oil filter, hydraulic oil filter and fuel filter are included so that you can use them as a guideline for replacement.

- SETTING
  Time, alarm and contrast can be set.

DATA SCREEN (DATA)

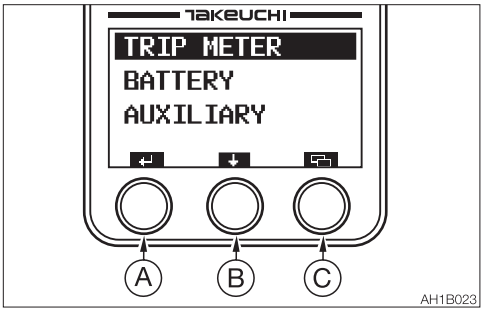

Press the (A) key to proceed to the screen selected by the bar.
Press the (B) key to move the selection bar.
Press the (C) key to return to the Menu screen.

- **Trip meter (TRIP METER) for maintenance**
  The trip meters for the engine oil filter, hydraulic oil filter or fuel filter are displayed.

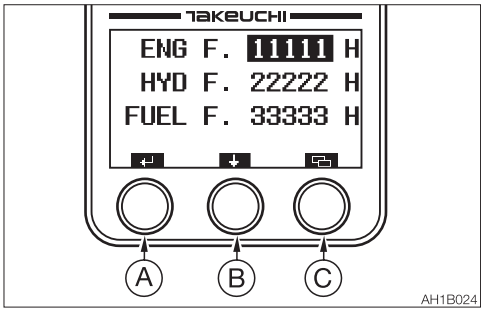

Press and hold the (A) key for at least five seconds resets the selected trip meter to "0".
Press the (B) key to move the selection bar.
Press the (C) key to return to the DATA screen.

- **Battery (BATTERY)**
  Displays the battery voltage.

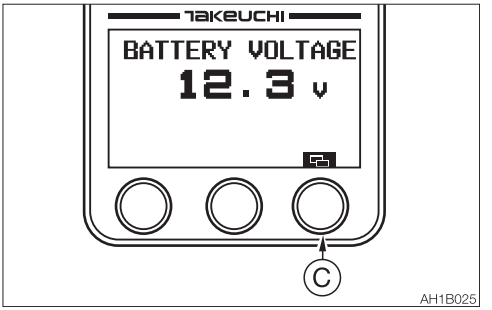

Press the (C) key to return to the DATA screen.

- **Auxiliary circuit (AUXILIARY)**
  Displays the flow rate in the auxiliary circuits of the 1st, 2nd or 3rd.

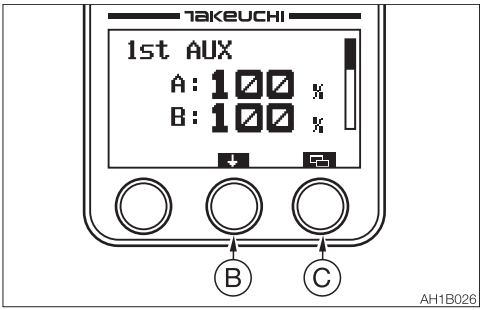

Each time the (B) key is pressed, the auxiliary circuit is displayed in this order: Auxiliary 1st, Auxiliary 2nd and Auxiliary 4th.
Press the (C) key to return to the Data screen.

SETTING SELECTION SCREEN (SETTING)

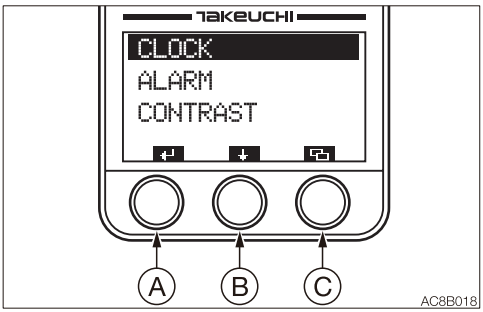

Press the (A) key to proceed to the screen selected by the bar.
Press the (B) key to move the selection bar.
Press the (C) key to return to the Menu screen.

- **Time setting (CLOCK)**
  The time to be displayed on the Home screen can be set here.

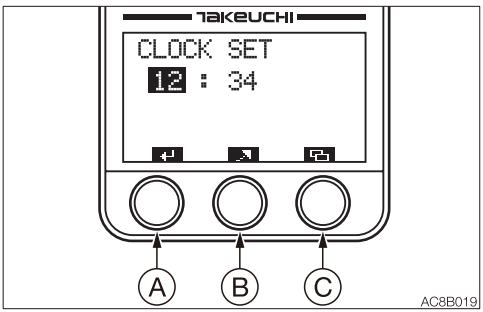

a. When the selection bar is at CLOCK, press the (A) key to proceed to the time setting screen (CLOCK SET).
b. Pressing the (A) key in this screen moves the selection bar and flashes the figures on the bar.
   Setting range: hours, 1 to 24; minutes, 00 to 59
c. Press the (B) key to increase the number value selected.
   Press and hold the (B) key to rapidly increase the number value selected.
d. Press and hold the (A) key for at least two seconds to complete the setting and to return to the Setting Selection screen.
e. Press the (C) key cancels editing and to return to the Setting Selection screen.

- **Alarm setting (ALARM)**
  Five patterns of alarm setting are available.
  Alarm function can be set to on or off within the five patterns.

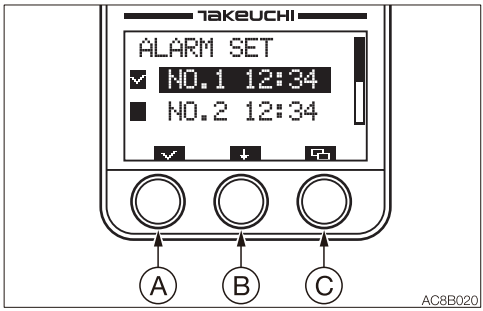

a. When the selection bar is at ALARM, press the (A) key to proceed to the alarm setting screen (ALARM SET).
b. Press the (A) key in this screen to place a checkmark in the box at the left of the setting bar. Press the (A) key again to remove the checkmark.
   The alarm setting cannot be changed only by placing or removing a checkmark.
c. Press and hold the (A) key for at least two seconds to complete the setting and to return to the Setting Selection screen.
   Be sure to perform the above operation when you wish to set the alarm.
   A clock symbol is displayed on the Home screen.
d. Press the (B) key to move the selection bar.
e. Press and hold the (B) key for at least three seconds to enter the alarm time setting mode.
f. Press the (C) key to cancel editing and to return to the Setting Selection screen.
   Checked .....On
   Unchecked .....Off

- **Alarm time setting mode**
  Sets the time for alarm.

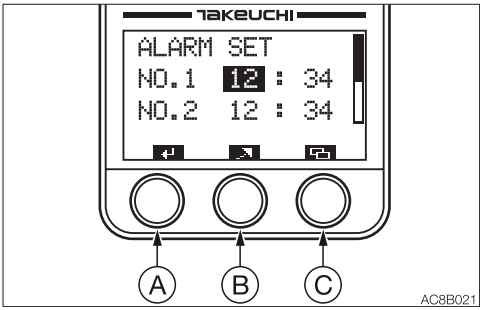

a. Select the item to be set in the alarm setting screen (ALARM SET).
b. Press and hold the (B) key for at least three seconds to enter the alarm time setting mode.
c. Press the (A) key in this screen to move the selection bar and to flash the figures on the bar.
   Setting range: hours, 1 to 24; minutes, 00 to 59
d. Press the (B) key to increase the number value selected.
   Press and hold the (B) key to rapidly increase the number value selected.
e. Press and hold the (A) key for at least two seconds to complete the setting and to return to the Setting Selection screen.
f. Press the (C) key to cancel editing and to return to the Setting Selection screen.

- **Contrast setting (CONTRAST)**
  Adjust the LCD contrast.

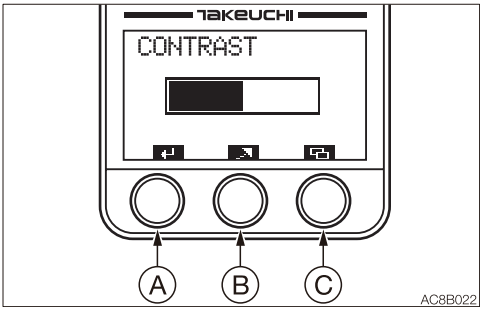

a. When the selection bar is at CONTRAST, press the (A) key to proceed to the contrast setting screen (CONTRAST).
b. To increase contrast, press the (B) key. The bar advances to the right.
   Press and hold the (B) key to rapidly advance the bar.
   Once the bar reaches the right end (highest contrast), it returns to the left end (lowest contrast).
c. Press and hold the (A) key for at least three seconds to complete the setting and to return to the Setting Selection screen.
d. Press the (C) key to cancel editing and to return to the Setting Selection screen. The changes made to the setting are reflected, but they will be removed when the starter switch is turned off.

SIDE MENU SCREEN

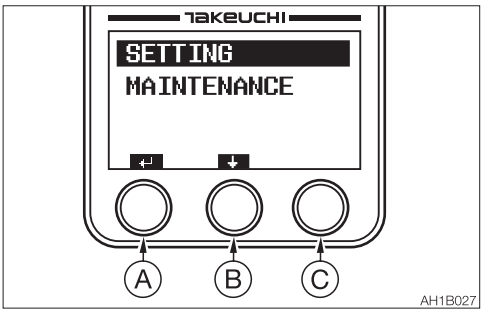

To display the side menu, turn the starter switch from the OFF to the ON position while pressing the (C) key.
Press the (A) key to proceed to the screen selected by the bar.
Press the (B) key to move the selection bar.

- SETTING
  The flow rate ratio of the auxiliary circuits (Auxiliary 1st, Auxiliary 2nd and Auxiliary 4th) can be set. The language setting is also available.

- MAINTENANCE
  Diagnosis and failure record can be checked.

SETTING SELECTION SCREEN (SETTING)

- AUXILIARY
  Refer to “Auxiliary setting screen (AUXILIARY)” on page 2-45.

- LANGUAGE
  Refer to “Language setting” on page 2-113.

- OPTION
  To change any option, contact your sales or service dealer.

AUXILIARY SETTING SCREEN (AUXILIARY)

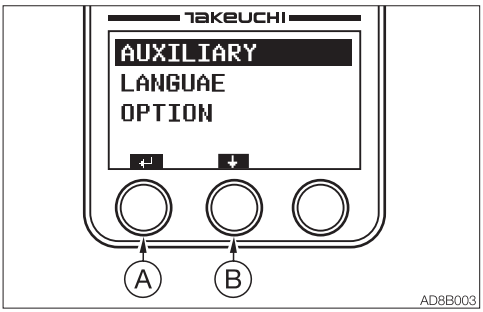

Press the (B) key to move the selection bar.
Select “AUXILIARY” and press the (A) key to move to “Auxiliary setting screen (AUXILIARY)”.

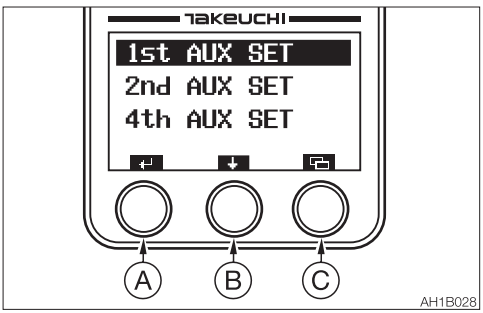

Press the (A) key to proceed to the screen selected by the bar.
Press the (B) key to move the selection bar.
Press the (C) key to return to the side menu screen.

- **Auxiliary 1st flow rate setting (1st AUX SET)**
  Set the flow rate ratio for the No. 1, No. 2 and No. 3rd in the Auxiliary 1 circuit.

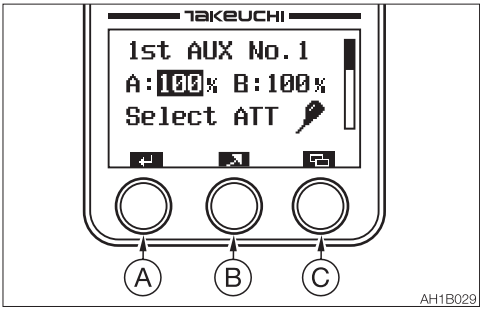

a. Pressing the (A) key in this screen moves the selection bar and flashes the figures on the bar.
b. Press the (B) key to increase the number value selected.
   Press and hold the (B) key for at least one second to rapidly increase the number value selected.

Initial condition	Standard flow	Variable range
Auxiliary 1st No. 1	100% = 60 L/min (15.9 US gpm)	10 to 100%
Auxiliary 1st No. 2	75% = 45 L/min 11.9 US gpm)	10 to 100%
Auxiliary 1st No. 3	50% = 30 L/min (7.9 US gpm)	10 to 100%

Note: The table shows the 1-way flow rate when there is no load.
Note: The 1-way flow can be performed only when the switch (A) is used.

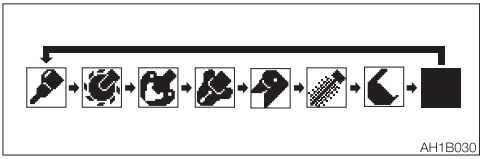

c. When the selection bar is at a symbol of attachment, press the (B) key to change it to the desired symbol.
   Select the symbol representing the attachment to be used.
d. The setting for Auxiliary 1 No. 2 and Auxiliary 1 No. 3 can be done using the same procedure as above.
e. Press and hold the (A) key for three seconds or more to complete the setting and return to the setting selection screen.
f. Press the (C) key to cancel editing and to return to the setting selection screen.

- **Auxiliary 2nd flow rate setting (2nd AUX SET)**
  Set the flow rate ratio for the Auxiliary 2nd circuit.

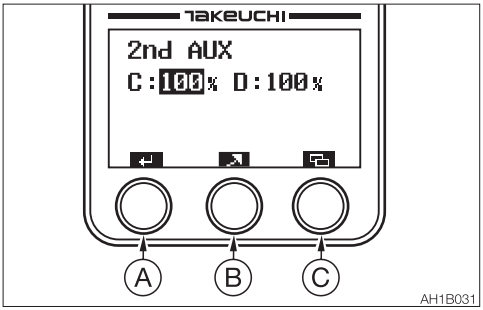

a. For the key operation, refer to the Auxiliary 1st flow rate setting section.

Initial condition	Standard flow	Variable range
Auxiliary 2nd	C/D 100% = 22 L/min (5.8 US gpm)	10 to 100%

- **Auxiliary 4th flow rate setting (4th AUX SET)**
  Set the flow rate ratio for the Auxiliary 4th circuit.

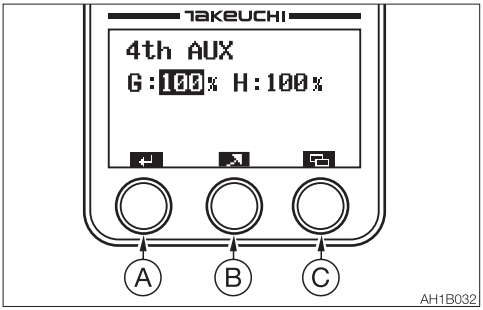

a. For the key operation, refer to the Auxiliary 1st flow rate setting section.

Initial condition	Standard flow	Variable range
Auxiliary 4th	G/H 100% = 22 L/min (5.8 US gpm)	10 to 100%

MAINTENANCE

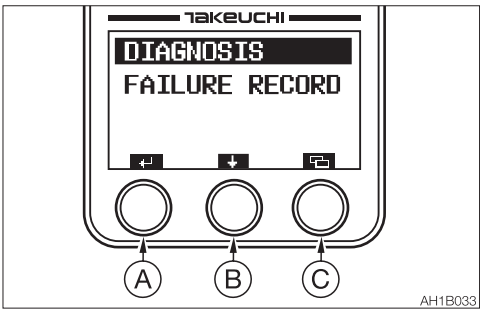

Diagnosis and failure record can be checked.
Press the (A) key to proceed to the screen selected by the bar.
Press the (B) key to move the selection bar.
Press the (C) key to return to the side menu screen.

- Diagnosis (DIAGNOSIS)
  Input/Output, Analog Input, PWM Output, Engine Control Module (ECM) can be checked.

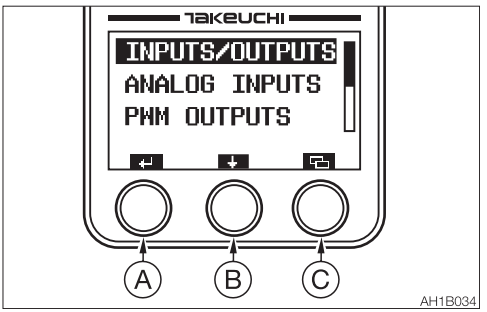

Press the (A) key to proceed to the screen selected by the bar.
Press the (B) key to move the selection bar.
Press the (C) key to return to the Maintenance screen.

· Inputs/outputs (INPUTS/OUTPUTS)

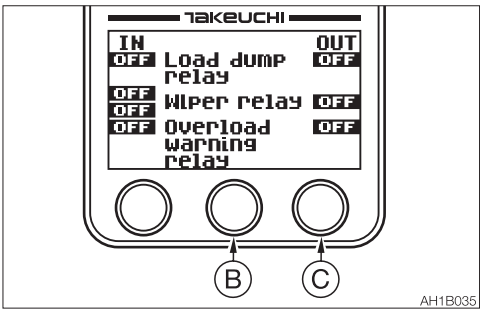

The 9-page diagnosis data can be displayed.
Press the (B) key to display a different page.
Press the (C) key to return to the Diagnosis screen.

IN	1 page	OUT
OFF/ON	Load dump relay	OFF/ON
OFF/I	Wiper relay	OFF/ON
OFF/C		
OFF/ON	Overload warning relay	OFF/ON

IN	2 page	OUT
OFF/ON	Blade float relay	OFF/ON
OFF/ON	Safety lock SOL.	OFF/ON
OFF/ON	Buzzer	OFF/ON
OFF/ON	AUX auto depress SOL.	OFF/ON

IN	3 page	OUT
OFF/G	Travel speed SOL.	OFF/ON
OFF/L		
OFF/G	AUX3 SOL.	OFF/ON
OFF/F		
OFF/2	AUX2/4 SOL.	OFF/ON
OFF/S	Swing/Adjust SOL.	OFF/ON

IN	4 page	OUT
OFF/ON	Blade right angle SOL.	OFF/ON
OFF/ON	Blade left angle SOL.	OFF/ON
OFF/ON	1 Way SOL.	OFF/ON

IN	5 page	OUT
OFF/ON	Option AUX4	OFF/ON
OFF/ON	Deceleration button	OFF/ON
OFF/ON	AUX2/4 SW	OFF/ON
OFF/ON	PWR mode SW	OFF/ON
OFF/ON	Highland mode SW	OFF/ON

IN	6 page	OUT
OFF/ON	Engine discriminate (Yanmar)	OFF/ON
OFF/ON	Automatic deceleration SW	OFF/ON

IN	7 page	OUT
OFF/ON	AUX1 flow rate select SW	OFF/ON
OFF/ON	Option 2 piece boom	OFF/ON
OFF/ON	Selector button (2 piece boom)	OFF/ON

IN	8 page	OUT
OFF/ON	AUX3 pressure SW	OFF/ON
OFF/ON	Pressure SW(auto decel)	OFF/ON
OFF/ON	Air cleaner filter clogging	OFF/ON

IN	9 page	OUT
OFF/ON	Water separator warning SW	OFF/ON
OFF/ON	Glow	OFF/ON
OFF/ON	AC compressor	OFF/ON
OFF/ON	BAT charge	OFF/ON

· Analog inputs (ANALOG INPUTS)

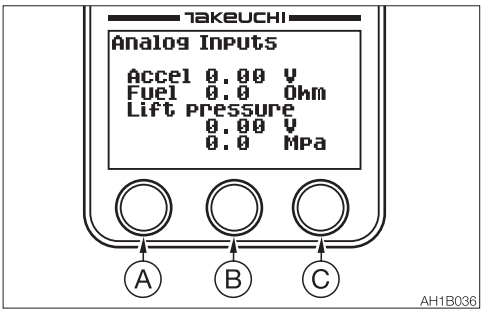

Displays the analog input information in one page.

Accel	0.00 V
Fuel	0.0 Ohm
Lift pressure	0.00 V
	0.0 Mpa

· PWM outputs (PWM OUTPUTS)

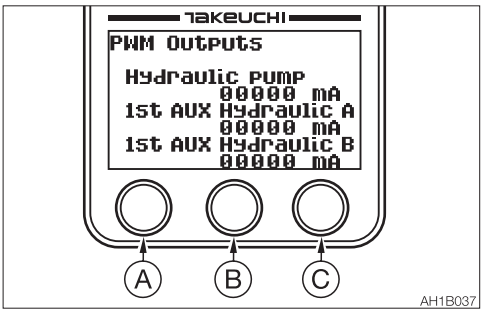

Displays the output information on the pump and the auxiliary circuits in two pages.

Page 1

Hydraulic pump	00000 mA
1st AUX Hydraulic A	00000 mA
1st AUX Hydraulic B	00000 mA

Page 2

2/4 AUX Hydraulic C/G	00000 mA
2/4 AUX Hydraulic D/H	00000 mA

· Engine Control Module (ECM)

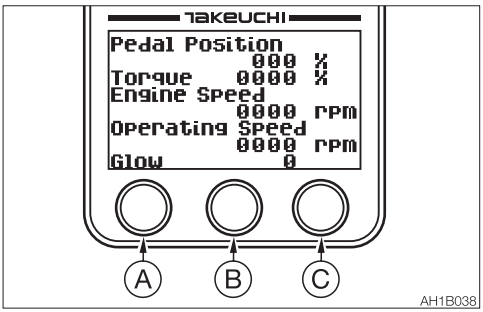

Displays the engine output information in three pages.

Page 1

Pedal Position	000 %
Torque	0000 %
Engine Speed	0000 rpm
Operating Speed	0000 rpm
Glow	0

Page 2

Coolant Temp.	000 °C
Fuel Temp.	000 °C
Oil Pressure	0000 kPa
Fuel Rate	0000 L/h
Barometric Pressure	000 kPa

Page 3

Air Inlet Temp.	000 °C
Boost Pressure	000 kPa
Boost Temp.	000 °C
Battery Voltage	0000 V

• Failure Record (FAILURE RECORD)
The Active Failure Record data and the Past Failure Record data can be checked.

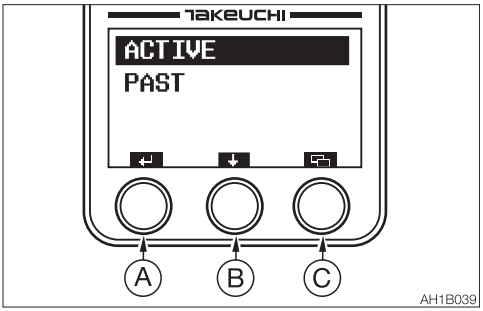

Press the (A) key to proceed to the screen selected by the bar.
Press the (B) key to move the selection bar.
Press the (C) key to return to the Maintenance screen.

· **Active Failure Record (ACTIVE)**

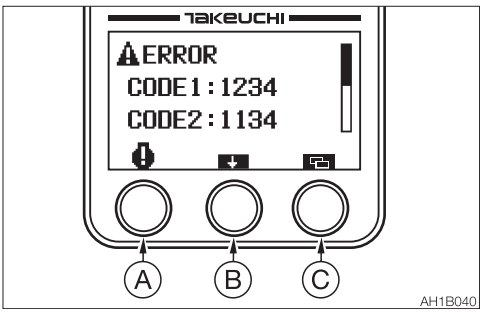

⚠..... Vehicle error code list
Pressing the (A) key while the Engine Error Code List is displayed changes the screen to the Vehicle Error Code List. Four latest codes are displayed.

..... Engine error code

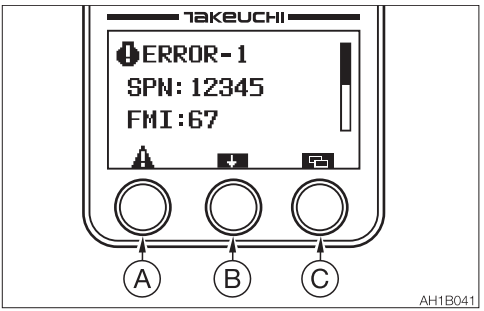

Pressing the (A) key while the Vehicle Error Code List is displayed changes the screen to the Engine Error Code List. The three latest code SPNs and the FMIs are displayed.
Press the (B) key to display a different page.
Pressing the (C) key returns to the Failure Record screen.

· **Past Fault History (PAST)**

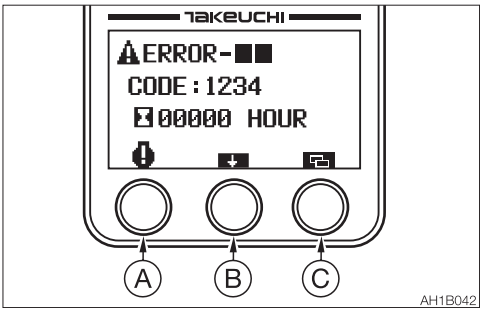

⚠..... Vehicle Error Code 1 to 12
When the (A) key is pressed while the past engine error codes are displayed, the display changes to the past vehicle error code screen. The fault history data is displayed with the latest one at the top, as well as with the serial numbers (1 to 12) attached. The most recent time of fault occurrence recorded by the hour meter is also displayed.

..... Engine error code 1 to 12

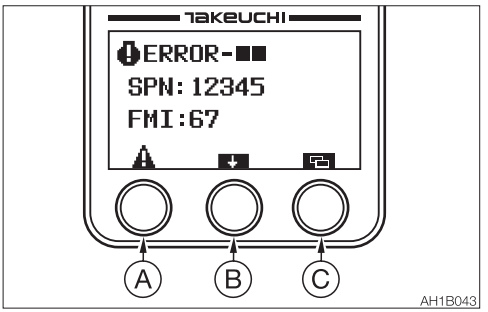

Pressing the (A) key while the past vehicle error codes are displayed changes to the past engine error code screen. The fault history data is displayed with the latest code SPNs and FMIs as well as the serial numbers of 1 to 12.
Press the (B) key to display a different page.
Pressing the (C) key returns to the Failure Record screen.

SWITCHES

STARTER SWITCH

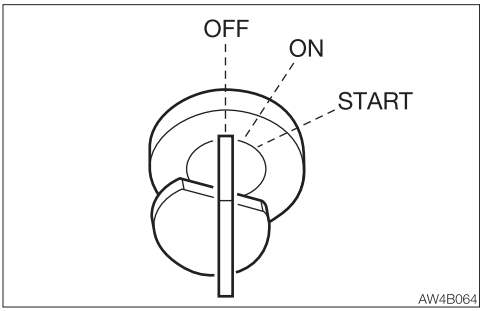

IMPORTANT: Do not repeatedly switch the key from OFF to ON and ON to OFF over a short period. Doing so will cause engine breakdown.

OFF ..... Position for stopping the engine and inserting or removing the key.
ON ..... Position in which the engine is running. At this position, all the electrical equipment is functional. When the coolant temperature is too low, the engine is automatically preheated.
START ..... Position for starting the engine. When the key is released, the switch automatically returns to the ON position.

ENGINE SHUTDOWN SWITCH

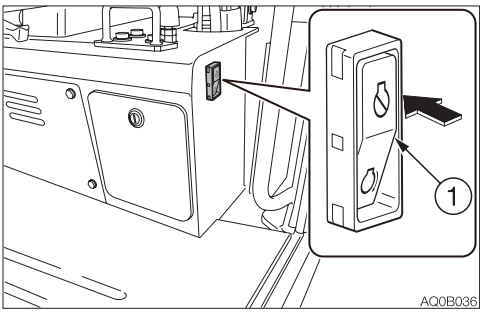

This switch is used to shutdown the engine if it fails to stop, due to machine failure or breakage, when the starter switch is set to the OFF position.
1. Press the switch (1).
2. After use, reset the switch (1).

THROTTLE CONTROLLER

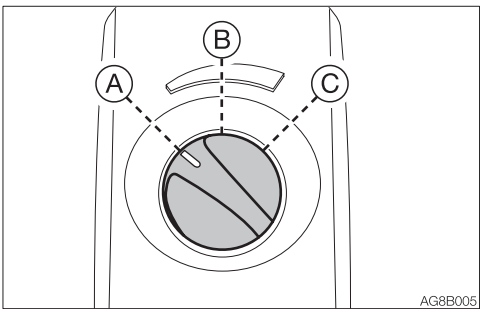

This controls the engine speed.
(A).....Low idling
(B) .....Medium speed
(C) .....Maximum speed

HORN BUTTON

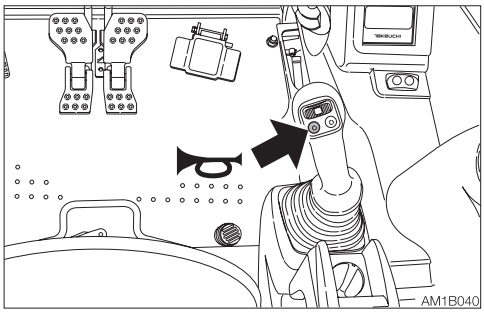

Press the button situated on the right operating lever to blow the horn.

DECELERATION BUTTON

⚠ WARNING

Before operating the deceleration button, set the operating lever to the neutral position and take your foot off the pedals. If the deceleration button is pressed while driving, the machine's operating speed will abruptly change to result in a dangerous situation.

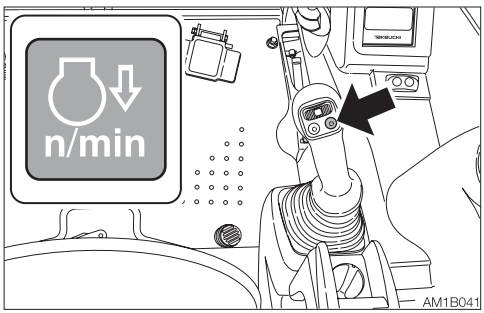

Press this button on the right operating lever to lower the engine speed to low idling. Press the button again to return to the engine speed set with the throttle controller. For safety reasons, it is designed that the deceleration function is activated to set the engine revolutions to low idling whenever the engine is started.
Cancel the deceleration mode by pressing the deceleration button as necessary.

Note: This deceleration button is capable of decreasing the engine speed and reducing the fuel consumption, with a simple operation, in a situation such as when little engine output is required and thus the operating or the travel levers are in neutral.

TRAVEL SPEED BUTTON

⚠ WARNING

When a load greater than a set value is applied during traveling in 2nd (high) speed, the speed will automatically slow down to 1st (low) speed. When the load becomes lighter, the speed will increase and return to 2nd (high) speed. It should be noted that the travel speed changes depending on the load condition (for machines with the automatic travel shift-down system).

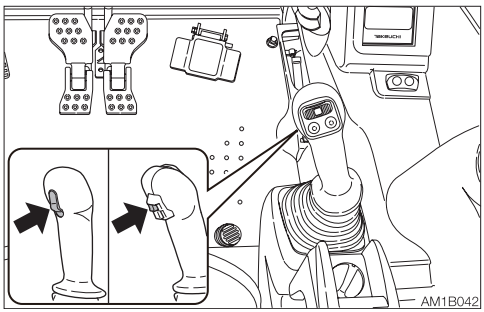

Press this switch to set the travel speed to 2nd (high) speed. Press it again to return to 1st (low) speed.

AUXILIARY 1ST SWITCHES

Auxiliary hydraulic buttons

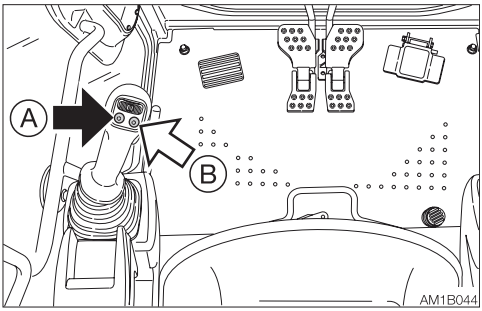

Press those buttons to control the flow of the oil in the first auxiliary hydraulic lines.
- Proportional control of the auxiliary hydraulic circuit is not possible.

(A).....Hydraulic oil flows to the left auxiliary line (a).
(B) .....Hydraulic oil flows to the right auxiliary line (b).

Slider switch (Proportional control)

Proportional control allows for slow-to-fast/ fast-to-slow movement of attachment. Example: If you move the slider switch half way, the attachment will move at approximately one-half the speed.

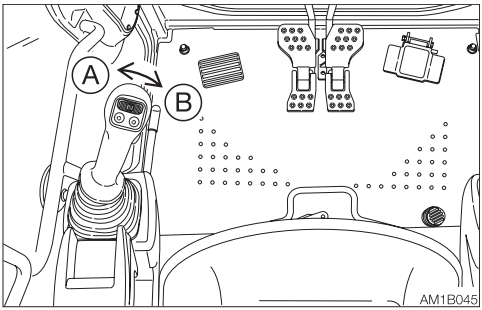

Move this switch to control the flow of the oil in the first auxiliary hydraulic lines.
(A).....Hydraulic oil flows to the left auxiliary line (a).
(B) .....Hydraulic oil flows to the right auxiliary line (b).

Refer to “Auxiliary hydraulic lines (If equipped)” on pages 2-102 to 2-107.

AUXILIARY 2ND/4TH SWITCH (IF EQUIPPED)

Slider switch
(Proportional control)
Proportional control allows for slow-to-fast/ fast-to-slow movement of attachment.
Example: If you move the slider switch half way, the attachment will move at approximately one-half the speed.

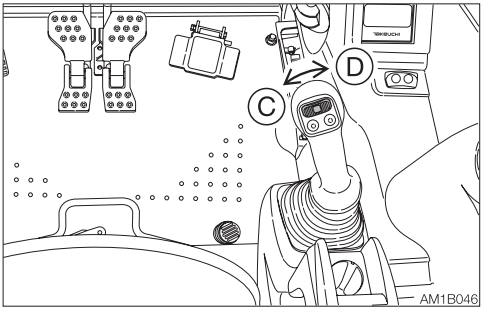

Move this switch to control the flow of the oil in the second auxiliary hydraulic lines.
(C): .....Hydraulic oil flows to the left auxiliary line (c).
(D): .....Hydraulic oil flows to the right auxiliary line (d).

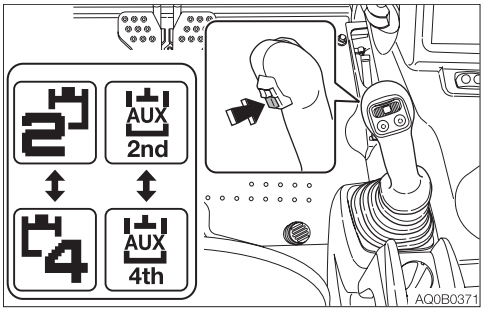

To use the auxiliary 4th hydraulic line, press the auxiliary 2/4 select button to change to the operation of the auxiliary 4th.
Refer to “Auxiliary hydraulic lines (If equipped)” on page 2-102 to 2-107.

THIRD AUXILIARY HYDRAULIC SWITCH AND BUTTON (IF EQUIPPED)

Refer to “Third auxiliary hydraulic switch and button (If equipped)” on page 2-105.

THIRD AUXILIARY HARD-LOCK SWITCH (IF EQUIPPED)

Refer to “Third auxiliary hard-lock switch (If equipped)” on page 2-106.

AUXILIARY 2/4 SELECT BUTTON (IF EQUIPPED)

Refer to “Auxiliary 2/4 select button (If equipped)” on page 2-107.

LIGHT SWITCH

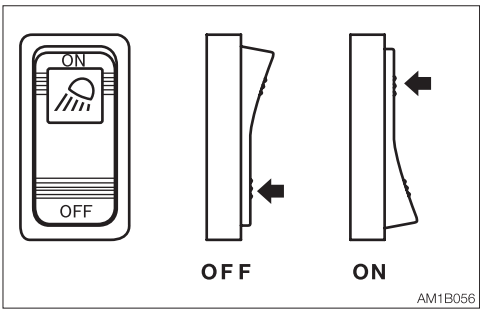

When this switch is turned while the starter switch is at ON, the lights turn on as follows:

OFF ....Off
ON .....Switch lamps, front light, boom light, side lights and tail lamps will be lit. (switch lamp is lit)

FRONT WIPER SWITCH

IMPORTANT: If no washer fluid is discharged, do not operate the washer. Doing so may damage the pump.
IMPORTANT: Operating the wiper with no moisture on the windshield will scratch the glass. Use water or washer fluid when operating the wiper.
IMPORTANT: In cold climates, the wiper blade may freeze to the glass. Operating the wiper forcibly may damage the wiper motor.

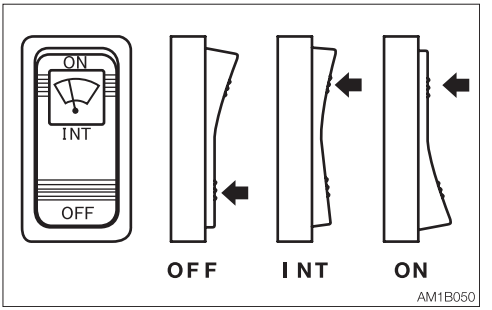

OFF ....Off
INT .....Intermittence operation
ON .....Continuous operation

FRONT WASHER SWITCH

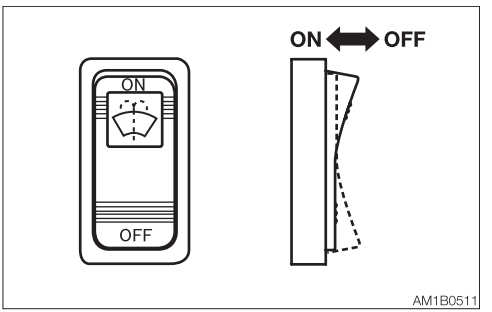

ON .....Pressing the ON side of the switch causes the washer to spray washer fluid. To stop spraying, release the switch.

REAR WIPER/WASHER SWITCH (IF EQUIPPED)

IMPORTANT: If no washer fluid is discharged, do not operate the washer. Doing so may damage the pump.
IMPORTANT: Operating the wiper with no moisture on the windshield will scratch the glass. Use water or washer fluid when operating the wiper.
IMPORTANT: In cold climates, the wiper blade may freeze to the glass. Operating the wiper forcibly may damage the wiper motor.

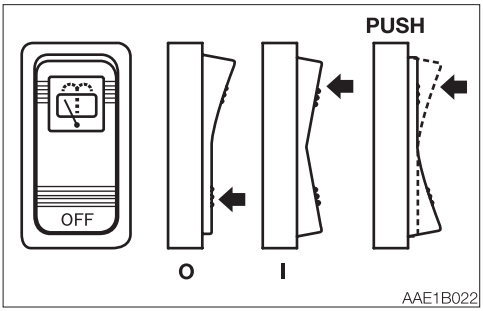

O..... Off
I ..... Wiper operates
PUSH..... Sprays washer fluid when pressed. Stops when released.

REAR DEFROSTER SWITCH (IF EQUIPPED)

⚠ CAUTION

When the rear defroster is in operation, the heating wires in the rear window become hot. Do not touch them as it may cause burns.

IMPORTANT: When cleaning the inside of the rear window, wipe around the heating wires to avoid damaging them.

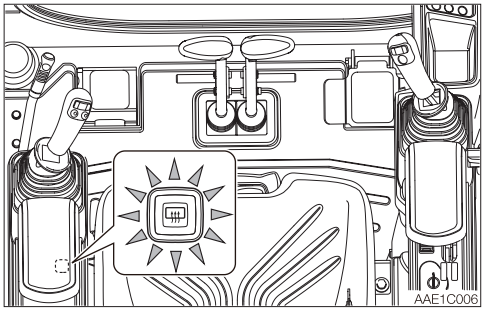

The rear defroster switch turns on or off the rear defroster.
When the rear defroster is turned on, its switch lamp lights up to indicate that the heating wires in the rear window are hot. The function automatically turns off 20 minutes after the rear defroster is turned on, and the lamp goes out.

Note: Even before 20 minutes have elapsed, the rear defroster automatically turns off and the lamp on the rear defroster switch goes out when the engine is stopped.

AUTOMATIC DECELERATION SWITCH

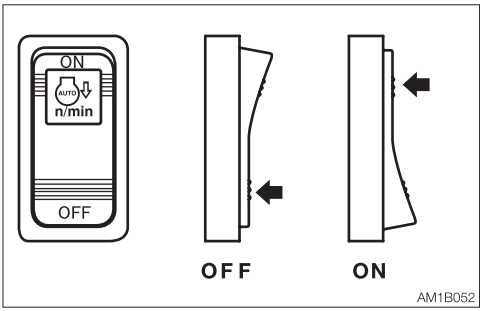

When the ON side of the switch is pressed, the deceleration lamp in the multi-information display or the instrument cluster flashes. This flashing stops when the deceleration function starts working, and the lamp remains lit while in the deceleration mode. The engine speed automatically drops to low idle (deceleration mode) four seconds after the control levers are set to neutral, to reduce fuel consumption. Moving the control levers will cause the speed to return to the original engine speed.
Switching from the deceleration button to the auto-deceleration switch will first return to the engine speed set with the throttle controller. Then, the engine will automatically enter the deceleration mode (low idling) if the control levers are not operated within four seconds.

ECO/HIGHLAND MODE SWITCH

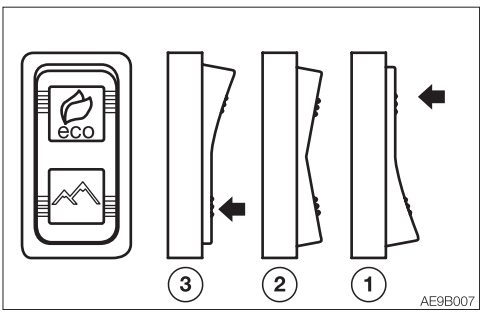

(1) ECO mode

- Pressing the ECO symbol side of the switch turns on the ECO mode indicator lamp on the multi-information display or the instrument cluster.
  The engine RPM and hydraulic horse power are set to economically optimal values to improve the fuel economy.
  Refer to “13. ECO mode indicator lamp” on 2-19.

(2) STD mode

Setting the switch to the neutral position turns off the ECO mode indicator lamp.

(3) Highland mode

This switch is used to reduce the engine load due to the hydraulic pump. When the machine is operated at a high-altitude site, the engine output is decreased due to thin air. In such cases, the hydraulic horse power is automatically adjusted to prevent the engine from stalling. Use this switch when the machine is operated at a high-altitude site.

- Pressing the highland mode symbol side of the switch lights up the highland mode indicator lamp in the multi-information display or the instrument cluster.
- To cancel the highland mode, press the ECO symbol side halfway to set to the neutral position. The highland mode indicator lamp goes out and enters the lowland mode.
  Refer to “Multi-information display” on page 2-16.
  Refer to “Instrument cluster” on page 2-33.

DETENT MODE SWITCH (AUXILIARY 1ST) (IF EQUIPPED)

IMPORTANT: Do not operate the machine in the detent mode for a long time. Doing so will increase the hydraulic oil temperature and shorten the service life of the hydraulic units.

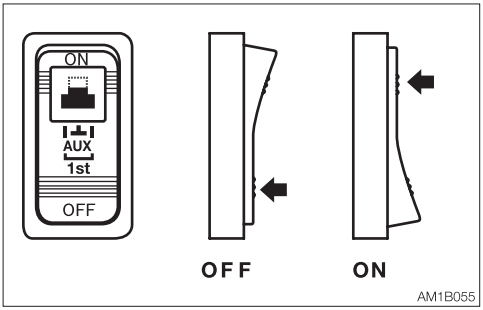

This switch is used to change the operation mode of the auxiliary 1st button (A). Pressing the ON side of the switch causes the auxiliary button (A) to enter the detent mode. Pressing the OFF side changes to the momentary mode.

AUXILIARY 1ST AUTO TANK SWITCH (IF EQUIPPED)

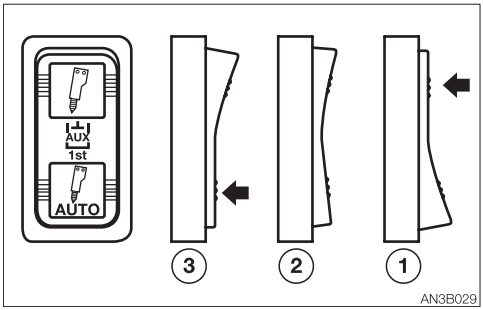

Use this switch to change the direction of hydraulic oil flow in the Aux. 1st line.

(1) When using a hydraulic breaker (1-way flow)
(2) When using a reversible attachment (2-way flow)
(3) The one-way flow can be set only when the button “A” of the Aux. 1 is pressed. (The tank circuit is automatically opened.)

LIFT OVERLOAD WARNING SWITCH (IF EQUIPPED)

⚠ WARNING

If the overload is not removed after the overload warning horn is sounded, the machine may tip over. If the horn starts sounding, stop operating the machine and lighten the load.

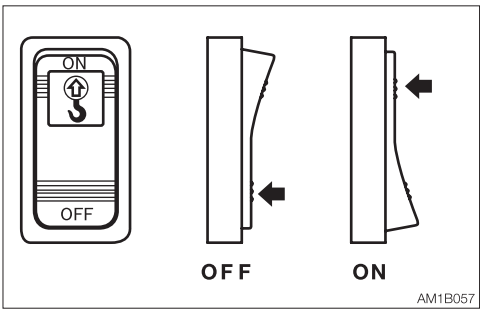

If a weight greater than the lifting capacity is applied or lifted, the overload warning device is activated and the horn sounds. (When the lift overload warning switch is turned on.)
OFF ....Off
ON .....On

BEACON LAMP SWITCH (IF EQUIPPED)

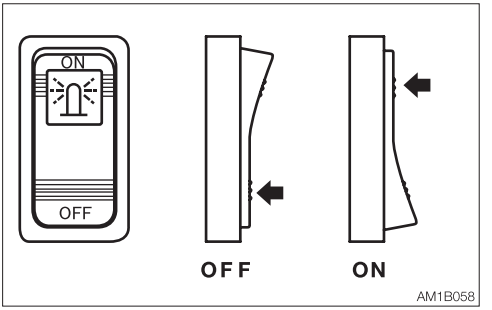

When this switch is turned on while the starter switch is at ON, the lamp turns on as follows:
OFF ....Off
ON .....Beacon lamp is lit

LEVERS AND PEDALS

SAFETY LOCK LEVER

⚠ WARNING

- **Before standing up from the operator's seat to open/close the window or remove/install the lower window, lower the working equipment to the ground, raise the safety lock lever to engage the lock and stop the engine. If any controls should be accidentally touched when the safety lock lever is lowered (unlocked), the machine will suddenly move and cause serious injury or death.**
- **Be careful not to touch the operating levers when raising or lowering the safety lock lever.**
- **Before leaving the operator's seat, lower the working equipment to the ground, raise the safety lock lever to engage the lock and stop the engine. Also, be sure to remove the key, lock the door and covers, take it with you and store it in a specified place.**

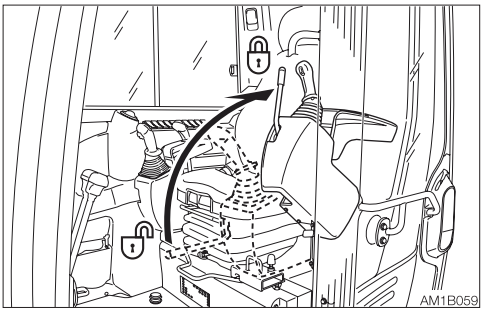

This device is for locking the operations of hoe attachment, slewing, auxiliary, dozer blade and traveling.
When the lever is raised, the lever stand springs up to lock the lever.

Safety start function
When the lever is in the unlock position, the engine cannot be started.

OPERATING LEVERS

⚠ WARNING

- **Before starting operation, carefully check which lever pattern you are going to use.**
- **It is described using the ISO pattern in this manual.**

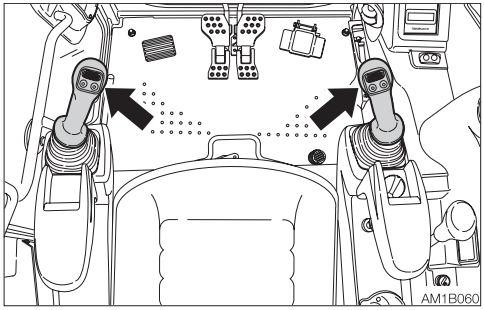

Use these levers to operate the boom, arm, bucket and upperstructure.
Refer to "Lever pattern" on pages 3-6 and 3-7.
Refer to "Operating the working equipment" on pages 3-14 and 3-15.

BLADE LEVER

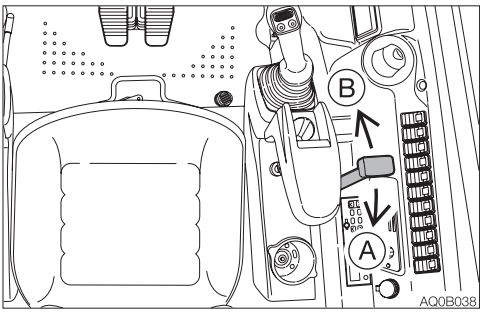

Use this lever to operate the dozer blade.
(A).....Blade up
(B) .....Blade down
Refer to “Operating the dozer blade” on page 3-15.

Float button (If equipped)

⚠ WARNING

- **Do not press the float button while the machine is raised by the blade. Doing so will cause the machine to fall. If you must work beneath the raised machine, always use a secure support to keep the machine raised.**
- **Do not press the float button while the blade is raised. Doing so will cause the blade to fall. Lower the blade to the ground before pressing the float button.**
- **Do not travel forward while the blade is in the float mode.**

Float operation

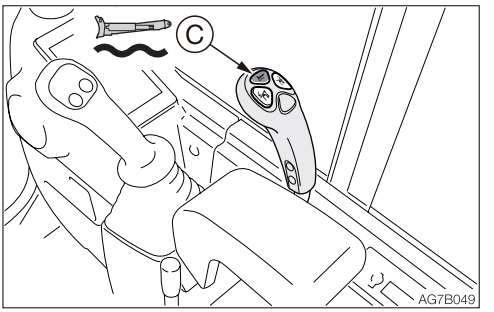

Button (C).....Float mode
Press the float button (C) to set the dozer blade to the float mode.
To cancel the float mode, press the float button (C) again. The float mode is temporally cancelled when the blade lever is tilted backward. To return to the float mode, tilt the blade lever back to the neutral position. Take caution when returning to the float mode.

TRAVEL LEVERS/PEDALS

⚠ WARNING

- **Before operating the travel levers/pedals, make sure that the dozer blade is to the front of the operator's seat. Remember that when the dozer blade is to the rear of the operator's seat, the travel levers/pedals must be operated in the reverse direction from when it is to the front.**
- **Do not rest your foot on the pedal unless operating it for traveling. If the pedal is accidentally stepped while working, the machine may suddenly move and cause serious injury or death.**

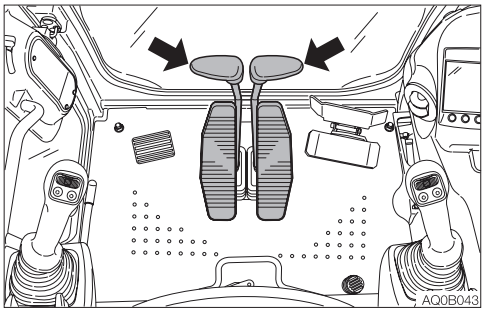

Use these levers/pedals to move forward or backward and to change directions.
Refer to "Operating the travel levers/pedals" on page 3-10.

BOOM SWING PEDAL

⚠ WARNING

Keep the pedal cover to the locked position when not using the pedal. Stepping on a pedal accidentally when it is not locked may cause accidents.

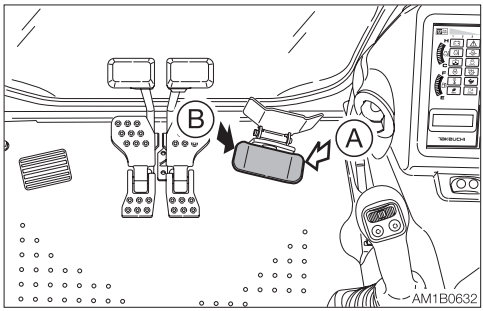

Use this pedal to operate the boom swing.
(A).....Boom swing right
(B) .....Boom swing left
Refer to "Operating the boom swing" on page 3-15.

Pedal lock

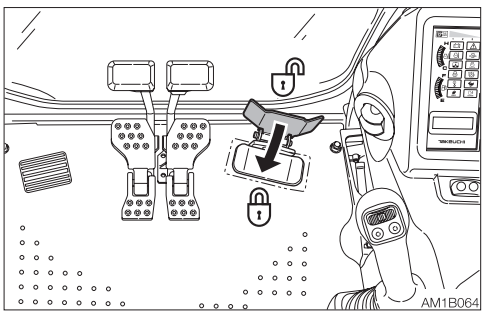

Set the pedal cover over the pedal to lock it.
Open the pedal cover from the pedal to unlock it.

ACCESSORIES

AIR CONDITIONER (IF EQUIPPED)

CAUTIONS ON USE

Ventilate periodically

- When using the air conditioner over an extended period of time, open the windows about once each hour to let in fresh air.
- Your eyes may become irritated if you smoke while using the air conditioner. If this happens, open the windows to let in fresh air. Smoking particularly irritates the eyes when the air conditioner is being used. Since the humidity in the cab drops, the cornea becomes dry.
- If the outside air is dirty, set the air conditioner to the circulation mode.

Always maintain good visibility

Working with dirty windows or fogged windows restricts visibility and is dangerous. Always clean dirt and moisture off the windows before working.

- The windows tend to get foggy when the humidity is high. If this happens, turn on the air conditioner to use outside air and the defroster to get rid of the fog.
- If the air conditioner is set to high when using the defroster, the difference between the external and internal temperatures increases, resulting in frost on the outside of the windows. If this happens, either turn off the air conditioner or move the temperature control knob to the right end to increase the internal temperature.
- Mist may blow out of the air outlets. This is not a malfunction. When moist air passes through the evaporator on the air conditioner unit, water particles in the air freeze and are emitted as mist.

Do not overcool

For health reasons, the air inside the cab should be kept at a temperature at which you feel a little cool when entering the cab from outside (a difference of 5 to 6°C (9 to 12°F)). Remember to adjust the temperature properly.

Do not turn on the air conditioner until the engine is started

To avoid placing an excessive load on the compressor, wait until the engine is started and is running smoothly before turning on the air conditioner.

Let hot air out first

If the machine has been parked in the sun, open the windows and door to let the hot air out of the cab before using the air conditioner.

Caution on refrigerant (gas)

If the refrigerant comes in contact with skin or eyes, it may cause frostbite or eye damage. Never touch the refrigerant or loosen the parts on the cooling circuit.
If the refrigerant gas leaks, keep flames away.

Off-season inspection

Even off season, run the air conditioner for 3 to 5 minutes at least once a week to maintain oil in the various parts of the compressor.

NAMES OF COMPONENTS

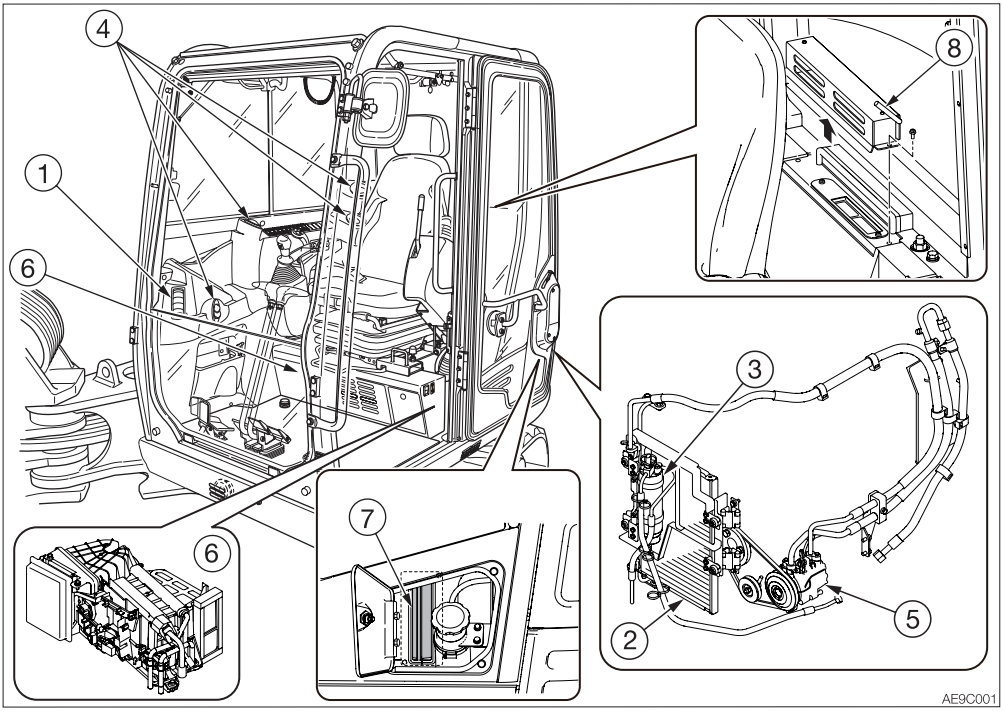

1. Defroster
2. Condenser
3. Receiver dryer
4. Outlets
5. Compressor
6. Air conditioner unit
7. Filter
8. Ventilation/Circulation select lever

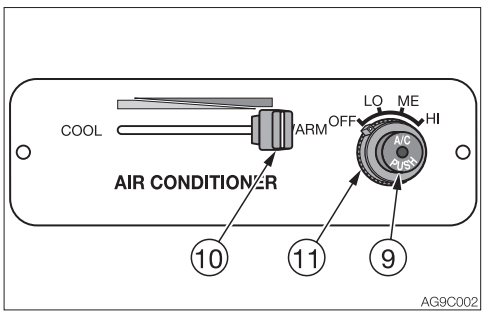

Control panel

9. Air conditioner switch
10. Temperature control knob
11. Fan dial

Air conditioner switch

IMPORTANT: To avoid placing an excessive load on the compressor, wait until the engine is started and is running smoothly before turning on the air conditioner.

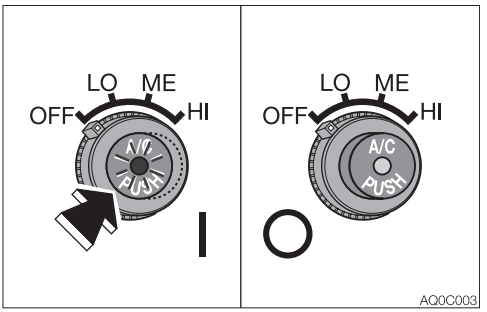

Use this switch to turn on or off the cooling/dehumidifying function. When this switch is pressed while the engine is running with the fan dial set to ON, the lamp lights up and the cooling/dehumidifying function is turned on. Press this switch again or turn the fan dial to OFF to turn off the cooling/dehumidifying function.
Lamp is off ....OFF
Lamp is on ....ON
Note: To prevent leakage of refrigerant gas from the compressor's seal, operate the air conditioner at least once a week, regardless of the season.
Note: The air conditioner will not function if the temperature in the cab is low (3°C (38°F) or lower).

Fan dial

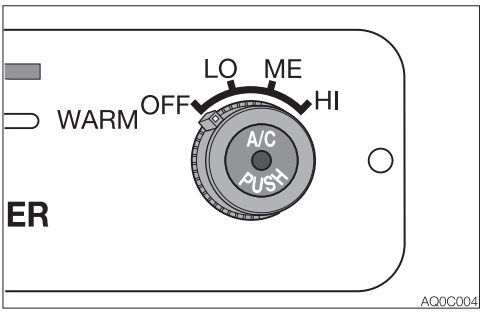

Use this dial to select the fan speed from the three levels. Turning this dial to the OFF position turns off the air conditioner.

OFF ....Turning off the fan and the air conditioner.
LO .....Low
ME .....Medium
HI .....High

Temperature control knob

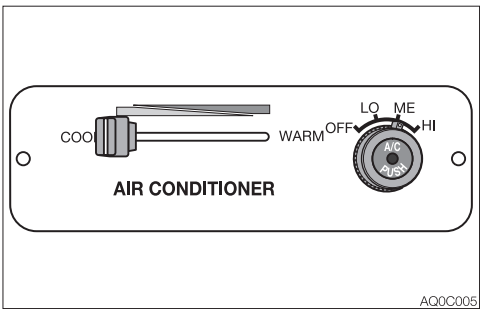

Use this knob to adjust the air temperature.
COOL..... Decreases the temperature
WARM..... Increases the temperature
Note: No warm air is emitted if the temperature of the engine coolant is low.

Outlets

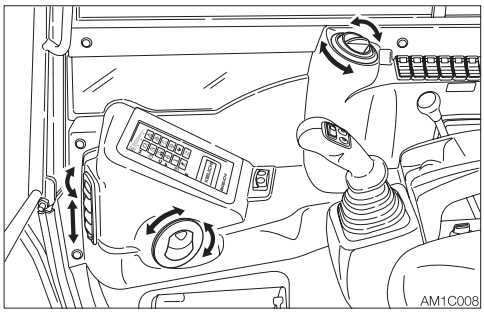

Move the louvers up and down or left and right to adjust the air flow direction and amount.

Ventilation/Circulation select lever

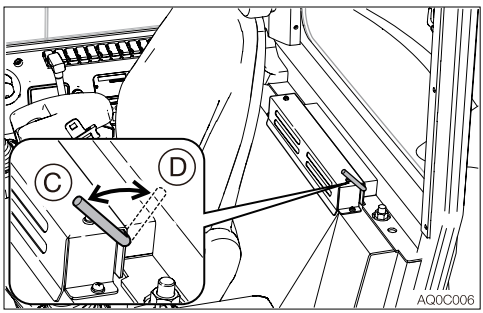

Use this lever to select between Ventilation and Circulation.
(C) .....Circulation
• Cool or heat the cab quickly
• When external air is dirty
(D) .....Ventilation
• Lets in fresh air
• Removes frosting from the windows
• Ventilates while cooling or heating

Operation

Dehumidifying and Heating (in cold climates or when the humidity is high)

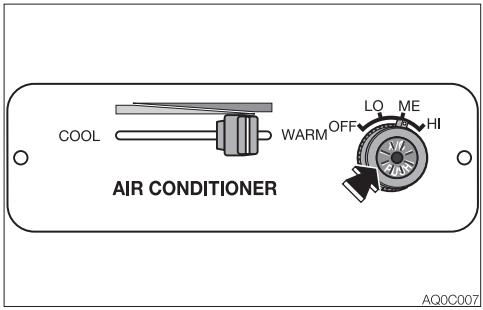

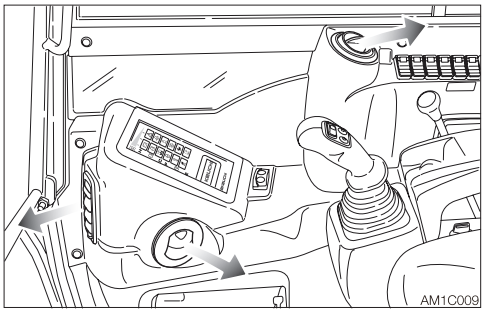

Arrange the foot outlets and the defroster so that they are directed to the front window. Let the dehumidified warm air blow on the front window, to prevent frosting.
1. Set the desired temperature by turning the temperature control knob to between the center and the right end.
2. Set the fan dial to the desired position.

Cooling

⚠ CAUTION

- **When the air conditioner is set to the circulation mode, the air in the cab gradually becomes dirty. Switch to the "ventilation" to ventilate once a comfortable temperature is obtained.**
- **Excessive cooling can be harmful to your health. It is best to keep the air inside the cab only about 5 to 6°C (9 to 12°F) cooler than the outside air.**

Note: If the machine has been parked in the sun, open the windows and door to let the hot air out of the cab before using the air conditioner.

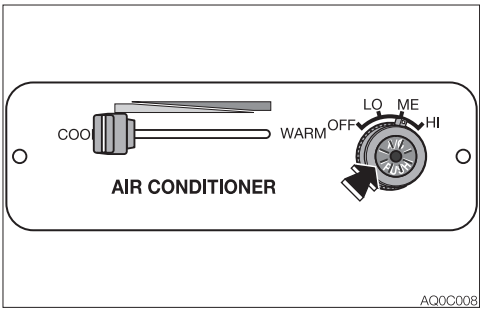

1. Set the fan outlet to the desired position.
2. Set the temperature by moving the temperature control knob to between the center and the left end.
3. Set the fan dial to the desired position.

Quick cooling

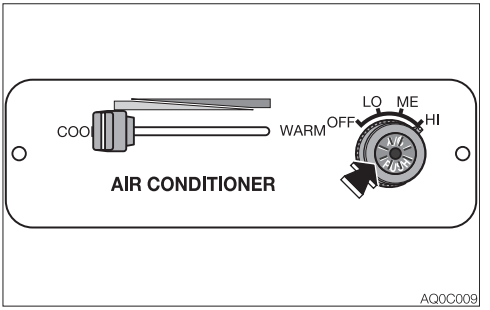

1. Set the fan outlet to the desired position.
2. Move the temperature control knob to the left end.
3. Set the fan dial to "HI".
4. Tilt the Ventilation/Circulation select lever forward to select Circulation.

Heating

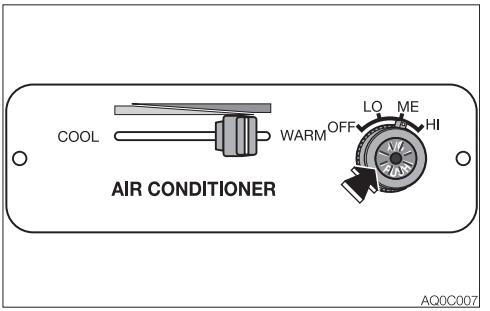

1. Arrange the outlet louvers so that air can be directed to the feet.
2. Set the fan dial to the desired position.
3. Set the temperature by moving the temperature control knob to between the center and the right end.
   For the highest temperature, move the knob all the way to the right.
4. Turn the fan dial to the OFF position to turn off heating.

Defrosting or defogging the windows
Note: If the air conditioner fan is set to High when using the defroster, the difference between the external and internal temperatures increases, resulting in frost on the outside of the windows. If this happens, either turn off the air conditioner or move the temperature control knob to the right end to increase the internal temperature.

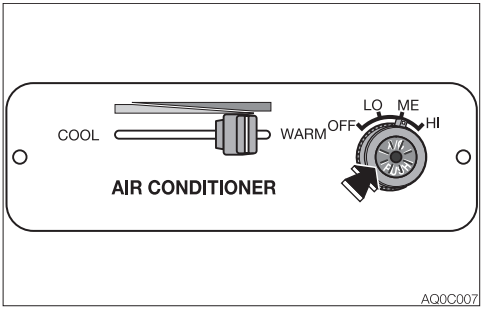

1. Set the temperature by moving the temperature control knob to between the center and the right end.
2. Set the fan dial to the desired position.
3. Tilt the Ventilation/Circulation select lever backward to select Ventilation.
4. Arrange the foot and defroster outlets so that they are directed to the front window.

CUP HOLDER

⚠ CAUTION

- **Drinks may be spilled due to vibration when the machine is operating or traveling. Be particularly careful not to burn yourself with hot drinks.**
- **Note that the power supply socket or other electric parts may be damaged if drinks are spilled on them. Be careful not to spill fluid on them.**

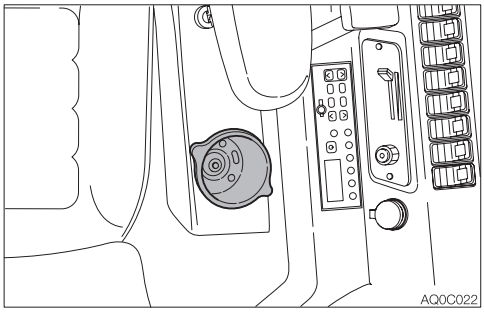

Use to hold cups or bottles.

ASHTRAY

⚠ WARNING

- **Be sure to extinguish cigarettes and matches completely before putting them in the ashtray, and close the ashtray after each use.**
- **Do not overfill the ashtray with cigarette butts or put in paper or other easily burnable objects. Doing so could cause fire.**

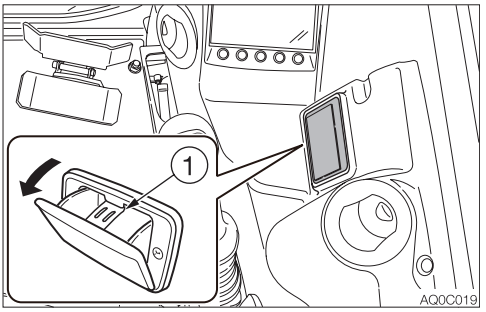

Pull the ashtray out towards you to use it. To clean, press the ash discharge button (1) and pull out the ashtray.

POWER SUPPLY SOCKET

⚠ WARNING

Use only those electric products which comply with the specifications of these sockets.

<Canopy>

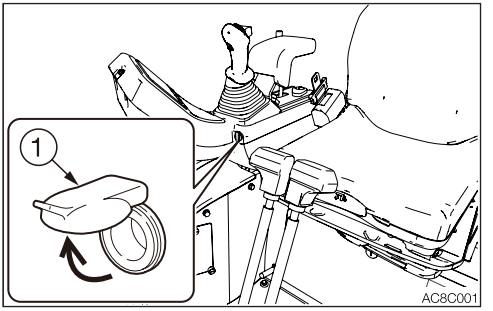

<Cab>

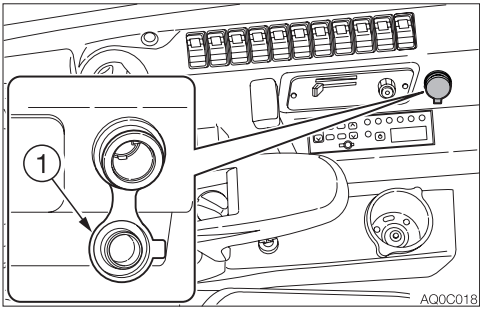

This socket is used to supply power to the interior electrical components. When using, be careful not to exceed 12V/5A.
To use, open the cap (1).

INTERIOR LIGHT

IMPORTANT: The battery capacity decreases if the interior light is left on for a long time when the engine is stopped.

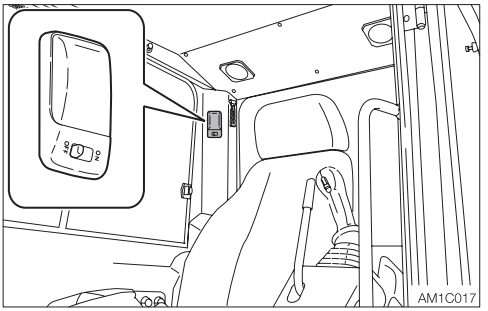

OFF ..... Remains off all the time.
Neutral position
..... Lights up for 30 seconds when the starter switch is turned to OFF from ON.
ON ..... Lights up all the time.

MIRRORS

⚠ WARNING

Adjust the mirrors before operating the machine.
If the visibility is poor, death or serious injury could result.

The mirror can be adjusted by moving it by hand. If it is too hard to move by hand or too loose, use a tool to adjust it. Set the machine to the travel posture, and then adjust the mirrors by following the instructions in this manual.

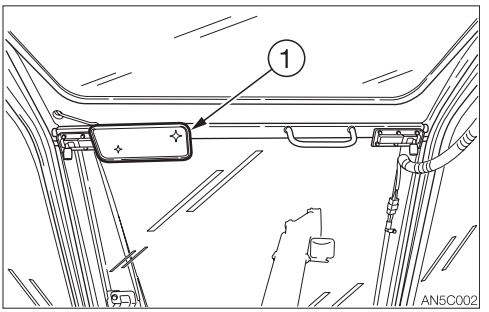

• Adjust the mirror (1) so that you can see the area behind the machine.

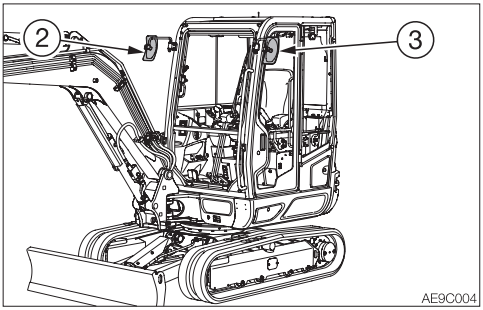

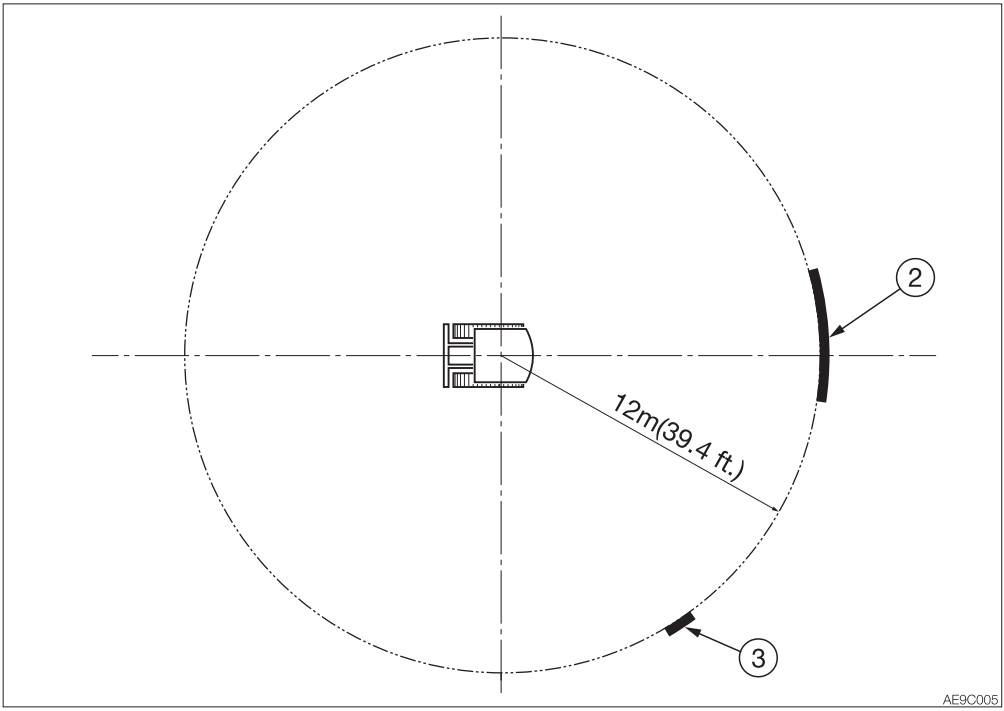

- Adjust the mirror (2) so that you can see the rear portion obstructed by the seat, which is on the circumference of the 12-meter radius circle centered at the operator.
- Adjust the mirror (3) so that you can see the left rear portion obstructed by the cabin, which is on the circumference of the 12-meter radius circle centered at the operator.

EXTERNAL POWER SOCKETS

⚠ WARNING

Use only those electric products which comply with the specifications of these sockets.

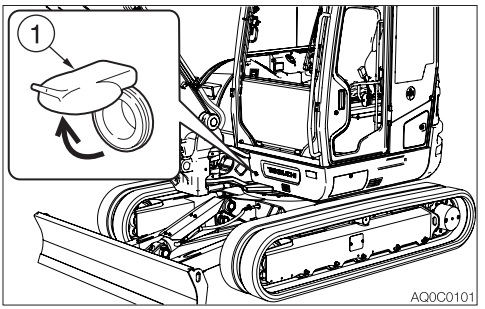

For beacon

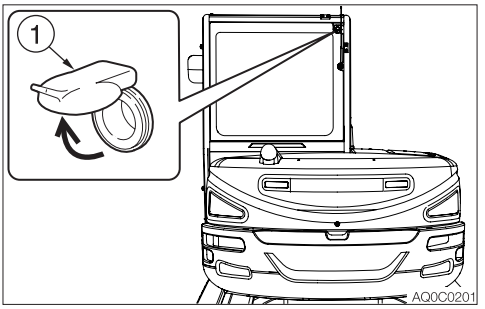

Use these sockets to connect the external power supply. When using, be careful not to exceed 12V/5A.
To use, open the cap (1).

HEATER

⚠ WARNING

- **Always be sure to allow sufficient ventilation.**
- **Do not place combustible or explosive objects near the air outlets.**

Heater fan switch

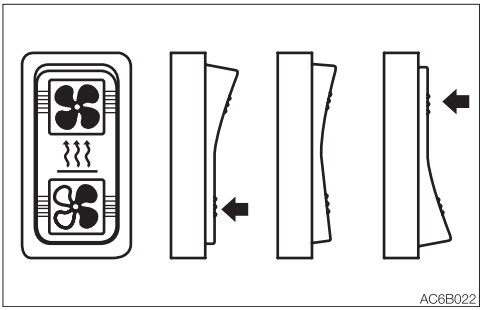

..... Low
Neutral .... OFF
..... High

Ventilation/Circulation lever

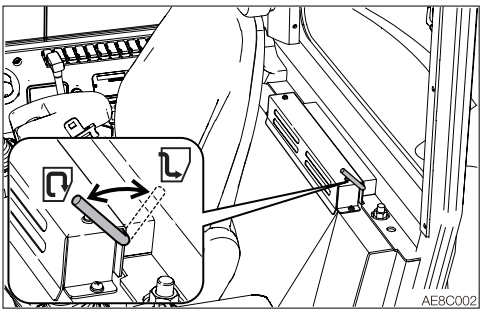

Use this lever to switch between Ventilation and Circulation.
...Full ventilation: For heating with ventilation. Intake of external air. Defrosting the windows.
..... Circulation: Quick heating or when external air is dirty.

Outlets

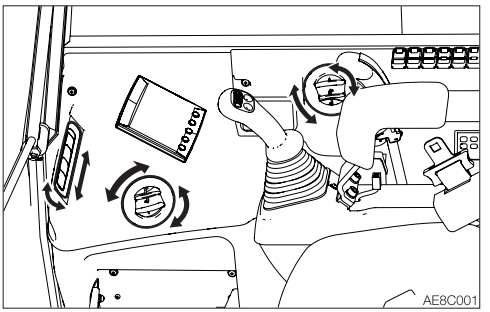

Move the louver up and down or left and right to adjust the air flow direction and amount.

Heater valve

Coolant circulates in the heater even when the heater switch is turned off.
When the heater is no longer needed, stop coolant circulation as follows.

IMPORTANT: Use the valve (1) either fully open or fully closed.
Cooling water could leak when the valve is partly opened.

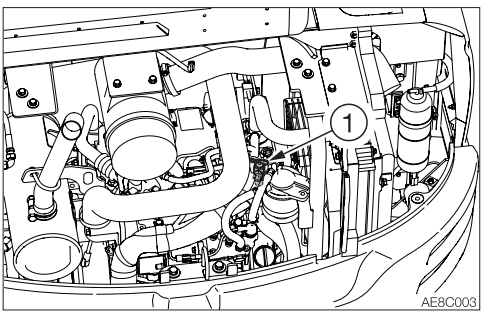

1. Park the machine on a level surface and stop the engine.
2. Open the engine hood.
3. Turn the valve (1) clockwise until it stops to close it.

Filters

Clean the filters immediately after operating in dusty places.
If the filters are clogged, the air flow is reduced and a booming sound is heard from the heater unit.
Refer to “Cleaning the air filter (AC)” on page 5-41.

RADIO (DIGITAL AUDIO BROADCASTING NOT SUPPORTED)

The type of radio installed varies depending on the machine.
Check which type of radio is installed and refer to the applicable page.
Refer to “Radio (Digital Audio Broadcasting not supported)” on page 2-78.
Refer to “Radio (Digital Audio Broadcasting supported)” on page 2-90.

CAUTIONS ON USE

- **To ensure safe operation of the machine, always be sure to keep the volume of the radio down to a level where you can easily hear sounds from outside the machine.**
- **Do not use the radio for a long time when the engine is stopped. Doing so will drain the battery and make it difficult or impossible to restart the engine.**
- **Be careful not to allow water or other liquids to come into contact with the radio. Otherwise, it may result in malfunction.**

NAMES OF COMPONENTS

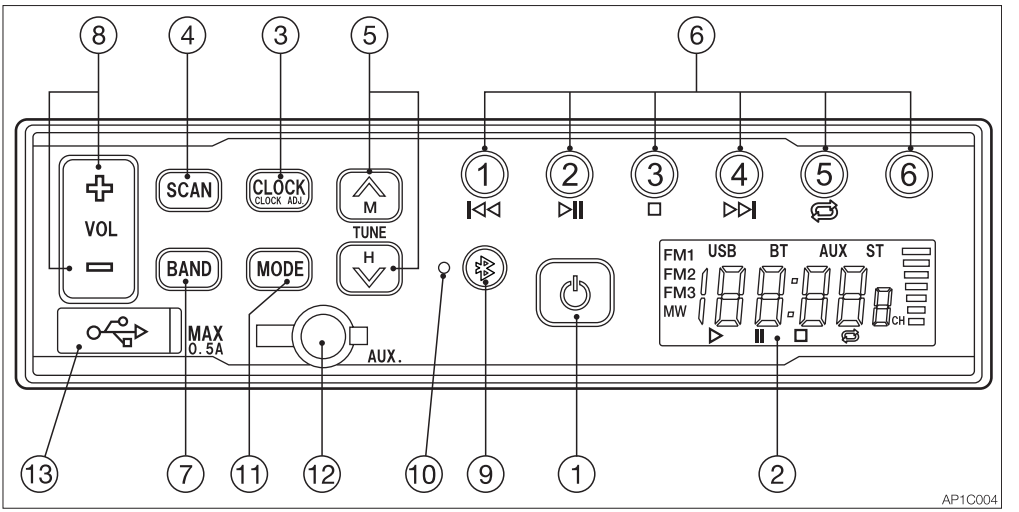

(1) POWER button
Use this button to turn on or off the radio.

(2) LCD
<Home screen>

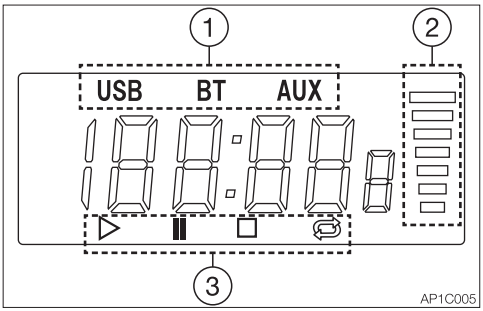

(1) Operation mode
USB: USB audio mode
BT: Bluetooth mode
AUX: Auxiliary in mode
(2) Volume level
(3) Audio control (For USB audio or Bluetooth mode only)

<Radio mode screen>

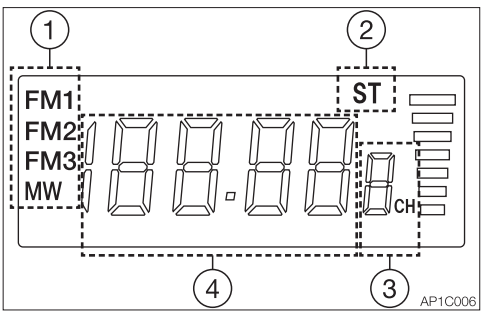

(1) Radio band display
FM1, FM2 FM3: FM band (Six stations can be preset to each band.)
MW: AM band
(2) Stereo display
Turns on when receiving stereo.
(3) Preset station
(4) Display of frequency/clock

Displays the time/the receiving frequency and the operation mode.

(3) Clock button (CLOCK)
Pressing this button changes the display to the clock. Pressing the button again displays the frequency. If the button is not pressed for three seconds, the display returns to the frequency. Pressing and holding the button enters the clock setting mode.

(4) Auto store/Auto seek station (SCAN)
Press this button to automatically assign receivable radio stations to preset buttons (1 to 6).

(5) Tuning button (TUNE ⏶ ⏷)
Press and hold this button (TUNE ⏶ or TUNE ⏷) for two seconds or more to start seeking the receivable stations. The seeking stops when a station is found. To cancel tuning halfway, press the button again.
Pressing the TUNE ⏶ button starts seeking stations with higher frequency.
Pressing the TUNE ⏷ button starts seeking stations with lower frequency.

(6) Preset buttons (1 to 6) (PRESET STATION)
Each button can store three FM stations (FM1, FM2, FM3) and one MW (AM) station.

(7) Band button (BAND)
Pressing this button changes the band from FM1 to FM2, FM3 and MW (AM), in this order.

(8) Volume control button (VOL ✙ ▭)
Press the VOL ✙ button to increase the volume and the VOL ▭ button to decrease the volume.

(9) Bluetooth button (B)
Press this button to connect to the already paired and most recently connected Bluetooth-enabled device.

(10) Bluetooth LED
Lights up when a Bluetooth-enabled device is connected. Flashes while in the pairing standby mode.

(11) Operation mode select button (MODE)
Pressing this button changes the operation mode from FM or MW (AM) to Bluetooth, USB and AUX, in this order.

(12) Auxiliary input jack (AUX)
Open the rubber cap and connect to an earphone jack of a smartphone or portable audio player with a commercially available stereo mini-plug (3.5 mm) cable. Be sure that jack is closed with the rubber cap when not in use.

(13) USB jack
Open the rubber cap and connect to a USB flash drive with a commercially available USB extension cable.
Be sure that jack is closed with the rubber cap when not in use.

Setting the clock

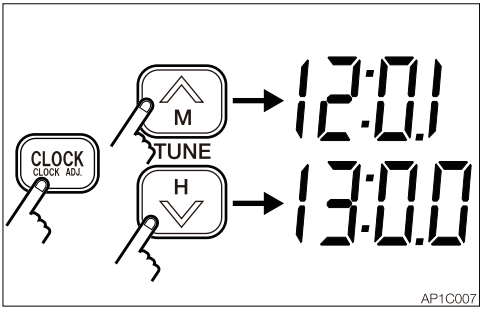

1. Press and hold the CLOCK button for at least two seconds to enter the clock setting mode. (The time display starts flashing.)
2. Use the tune ⏶ button to set the minute. Use the tune ⏷ button to set the hour.
3. Press the CLOCK button again to return to the clock display.

Playing the radio
1. Select the band, FM or MW (AM) by pressing the BAND button.
2. Select the station with the preset button or the tuning button.
3. Adjust the volume with the VOL (− or +) button.

Seeking stations (auto)
Press and hold the TUNE ∧ button for two seconds or one to start seeking stations in the higher frequencies direction. Press and hold the TUNE ∨ button for two seconds or more to start seeking stations in the lower frequencies direction. The radio will stop seeking when it finds a receivable station and start playing.

Manual tuning
Press the TUNE ∧ button to increase the frequency by one step. Press the TUNE ∨ button to decrease the frequency by one step.

Presetting stations
1. Press the BAND button to select a band (MW (AM) or FM), and then select the desired station.
2. To assign the selected station to a preset button, press and hold the button to be assigned for three seconds or more. The number of the preset button appears on the LCD to indicate that it is stored in the preset memory.
3. For more stations to preset, repeat the steps 1 and 2 above.
   - Each preset button (1 to 6) can store three FM stations (FM1, FM2, FM3) and one MW (AM) station.

Auto storing stations (SCAN)
Press the SCAN button while playing the radio. The radio automatically starts seeking the receivable stations in the band currently selected and assign each preset button (1 to 6) a station.

Note: The previous stations stored will be cleared (cancelled) by the auto storing. If the station stored in the preset button is not desirable, try to preset the station manually.

Playing back audio content stored on a USB flash drive
To enter the USB playback mode, first insert the USB flash drive while playing the radio and then press the MODE button. (The LCD changes to the time display and “USB” appears on the LCD.)
When playing back audio content stored on the USB drive, the following operations are available using the buttons (1) to (5).

(1) **Backward (⏮) button**
Moves one track backward and starts playing back from the beginning of it.

(2) **Playback/Pause (⏯) button**
Pauses playback when pressed during playback. When pressed again, starts playback from the point where the playback was paused.

(3) **Stop (⏹) button**
Stops playback when pressed during playback. When the Play/Pause button is pressed, the unit starts playing back the stopped track from the beginning.

(4) **Forward (⏭) button**
Moves one track forward and starts playing back from the beginning of it. Pressing and holding the button will fast forward the current track.

(5) **Repeat (🔁) button**
When pressed during playback, the unit repeats the current track.
To cancel repeating, press the button again.

Notes:
- When in the USB playback mode, do not insert or remove the USB drive.
- ESPERIA makes no warranty that the unit is compatible with every USB storage device.
- To connect the USB flash drive to the unit, use a commercially available USB extension cable.
- Do not connect any device other than a USB flash drive. The USB jack cannot be used to charge a device such as a smartphone.
- Please be advised that ESPERIA bears no responsibility for any damage to or loss of data on the USB drive arising from the use of the unit.

Using the Bluetooth wireless technology
You can use your Bluetooth-enabled mobile phone or audio device by connecting it to the unit.
When a mobile phone is connected, incoming calls will be announced.
Note: Since the unit is not equipped with a microphone, the unit cannot be used for phone calls.

To use the Bluetooth device, certain profiles must be able to interpreted.
The unit is compatible with the following profiles:

Incoming mobile phone call
HFP (Hands-Free Profile)

Bluetooth audio
A2DP (Advanced Audio Profile)
AVRCP (Audio Video Remote Control Profile)
Note: The Bluetooth® word mark and logos are owned by the Bluetooth SIG, Inc. and any use of such marks by ESPERIA is under license.

Pairing a Bluetooth-enabled device
When pairing the unit with a Bluetooth device for the first time, you have to pair with each other.
Once pairing is done, the unit and the paired Bluetooth device can recognize each other.

Note: Before pairing with the unit, turn on the Bluetooth feature on the Bluetooth device. Refer to the instruction manual of the Bluetooth device for further instructions.

1. Press the MODE button to switch to the Bluetooth mode.
2. Turn on the Bluetooth feature on the Bluetooth-enabled device.
3. Press and hold the Bluetooth button until two short beeps are heard, indicating the unit has entered the paring standby mode.
4. Select “CAR RADIO” on the Bluetooth-enabled device.

Note: Only one Bluetooth-enabled device can be paired and used at a time. To use a different device, follow the steps 1 to 4 for pairing again.
Note: At power-up, the unit automatically reconnects to the device most recently connected. When you leave the machine, cancel pairing by pressing and holding the Bluetooth button until two short beeps are heard, to avoid misconnection.

Playing back audio content stored on a Bluetooth-enabled device
When a Bluetooth-enabled device has been paired with the unit, check if the Bluetooth LED is lit, and then press the MODE button to enter the Bluetooth mode.
While the Bluetooth device is connected, the following operations are available using the buttons (1) to (5).

(1) Backward (⏮) button
Starts playing back from the beginning of the track currently playing. Pressing and holding the button will skip backward to the desired track.

(2) Playback/Pause (⏯) button
Pauses playback when pressed during playback. When pressed again, starts playback from the point where the playback was paused.

(3) Stop (⏹) button
Stops the currently playing audio.

(4) Forward (⏭) button
Moves one track forward and starts playing back from the beginning of it.

(5) Repeat (🔁) button
Disabled in the Bluetooth mode.

Note: If no sound is heard from the unit, check to see that the output destination of the music from the Bluetooth device is set to “CAR RADIO”.

Receiving an incoming call on the Bluetooth-enabled device

If a Bluetooth-enabled device has been connected, the unit enters the standby mode and waits for a call. When an incoming call arrives, “CALL” appears on the display, the volume of the car stereo is set to mute and the ringtone is heard from the speaker.

Auxiliary input (AUX)

- Connect a portable audio player and listen to your favorite music.
- Plug a stereo mini plug (3.5 mm) into the AUX-IN jack on the radio.
- Press the MODE button and select “AUX” to switch to the AUX mode. (The “AUX” display appears on the LCD and the frequency display is changed to the time display.)
- To return to the radio, press the MODE button again.
- When connecting, adjust the sound volume level of the audio player so that it is same as that of the radio.
- The sound volume can be adjusted with the volume control buttons on the unit.
- Do not connect a device with a larger output compared with a portable audio player.

Resetting the radio

If there is a problem such as display of incorrect frequency or failure in selecting, reset the unit by pressing the POWER button while pressing the Bluetooth button [B]. (In this case, the preset memory stations and clock are cleared.)
If you cannot reset the unit, please contact your sale or service dealer for help.

SPECIFICATIONS

Power source: .....12/24 VDC (negative ground)
Max. power consumption: .....2 A or less (at max. volume, 24 V)
Max. output power: ..16 W + 16 W (4Ω)
Rated output power: 14 W + 14 W (10% distortion, 4Ω)
Dimensions:.....178 (W) x 50 (H) x 91 (D) mm (without projections)
Receiving frequency: MW (AM): 531 to 1602 kHz (EU), 530 to 1710 kHz (USA)
FM: 87.5 to 108 MHz (EU), 87.9 to 108 MHz (USA)
Practical sensitivity: ..MW (AM) 20 µV (S/N 20 dB)
FM 3 µV (S/N 30 dB)
S/N ratio:.....FM 50 dB
AUX IN: .....Stereo mini jack (3.5 mm); max. input, 1 V; rated input, 90 mV
Bluetooth standard: ..Ver. 2.1 + EDR
Output:.....Class 2 (max. communication range 10 m)
Receiving frequency: 2.4 to 2.48 GHz
Supported profiles: ...HFP V. 1.5, A2DP V. 1.2, AVRCP V. 1.0
USB standard:.....USB 2.0/1.0
Supported audio formats
• MP3: .....MPEG 1/2/2.5 .....Audio Layer 2/3
• WMA: .....Windows Media ™ Audio
Supported format: ....FAT16/FAT32 file system
Max. output power: ..0.5 A

Note: The appearance and specifications are subject to change for improvement without prior notice.

TROUBLESHOOTING

For symptoms not included in the table below or if the problem persists after the proper remedies have been taken, consult your sales or service dealer.

General

Symptoms	Major causes	Remedies
Radio does not operate or the display is inaccurate when the button is pressed.	• CPU malfunction due to noises, etc.	• Reset the unit by referring to "Resetting the radio". Note that once reset, all settings are cleared; set the unit again.

Radio

Symptoms	Major causes	Remedies
Sound is noisy.	• Incorrect frequency for the station	• Tune to the correct frequency for the station.
	• Antenna (pillar antenna) is not extended.	• Be sure to extend the pillar antenna when using the radio.
	• Antenna is not grounded or properly installed.	• Consult your sales or service dealer for help.
	• The antenna is not connected to the power supply	• The power supply must be connected to the antenna with a built-in booster. For details on the connection, contact your sales or service dealer.
Unrealistic frequency is displayed.	• CPU malfunction due to noise, etc.	• Reset the unit by referring to "Resetting the radio". Note that once reset, all settings are cleared; set the unit again.

USB

Symptoms	Major causes	Remedies
No sound is heard.	• The USB flash drive has no MP3/WMA files.	• Write the MP3/WMA files correctly on the USB flash drive.
	• The files on the drive are not MP3/WMA.	• Use the MP3/WMA files properly encoded.
Sound skipping occurs. Noises are heard.	• The MP3/WMA files are not properly encoded.	• Use the MP3/WMA files properly encoded.
A USB device is not recognized.	• The USB flash drive is damaged.	• Replace the USB flash drive with a new one.
	• The USB connector is not properly connected.	• Disconnect the USB connector from the unit, and then reconnect it.
	• The USB flash drive is not formatted to FAT32/16.	• Format the USB flash drive to FAT32/FAT16, and then rewrite the MP3/WMA file. Be sure to back up the files on the drive before formatting it.

Bluetooth

Symptoms	Major causes	Remedies
A Bluetooth device cannot be connected.	• The Bluetooth device is not connected.	• Some Bluetooth devices require longer time for connection and cannot be reconnected automatically. Check if the Bluetooth button is lit. If it does not turn on after a while, re-pair the device by referring to “Pairing a Bluetooth-enabled device”.
	• Another Bluetooth device is connected.	• If another Bluetooth device is connected, re-pair the device by referring to “Pairing a Bluetooth-enabled device”.
A Bluetooth device cannot be remote controlled.	• The AVRCP profile is not connected.	• Remove all Bluetooth devices connected to the Bluetooth-enabled device, and then re-pair the device by referring to “Pairing a Bluetooth-enabled device”.
	• The connection link between the unit and the device may be corrupted.	• Pair the Bluetooth device again with the unit by referring to “Pairing a Bluetooth-enabled device”.
	• AVRCP is not supported	• Check the profiles supported by the Bluetooth-enabled device.

Bluetooth

Symptoms	Major causes	Remedies
No sound is heard from the Bluetooth audio.	• The volume on the Bluetooth-enabled device is too low.	• The volume of the Bluetooth audio playback is dependent on the volume level set on the Bluetooth device Set the volume on the Bluetooth device to a proper level.
	• Output destination of the Bluetooth device is not set to “CAR RADIO”.	• Make sure that the Bluetooth device’s output destination for music, etc. is set to “CAR RADIO”.
Phone function is not available.	• The radio (Digital Audio Broadcasting not supported) does not support phone calls using Bluetooth. Some types of mobile phone may connect to the unit using the call profile.	• Change the microphone setting from the unit to the mobile phone microphone by referring to the instruction manual of the mobile phone being used.
The Bluetooth audio is interrupted after receiving an incoming call.	• Some mobile phones cannot resume the Bluetooth audio after a phone call interruption.	• After the phone call, re-pair the mobile phone with the unit by referring to “Pairing a Bluetooth-enabled device”.

Regional limitation
To use a Bluetooth-equipped radio, “radio wave authentication” must be obtained in the country where the radio is to be used.
It can be used in the countries listed below, as of August 2017. To use it in other countries, please contact your service or sales dealer for assistance.

Countries where a Bluetooth-equipped radio can be used
Ireland, Italy, UK, Estonia, Austria, Holland, Cyprus, Greece, Croatia, Sweden, Spain, Slovakia, Slovenia, Czech, Denmark, Germany, Hungary, Finland, France, Bulgaria, Belgium, Poland, Portugal, Malta, Latvia, Lithuania, Rumania, Luxemburg, Iceland, Norway, Liechtenstein, Switzerland, Turkey, USA, Canada, Japan

RADIO (DIGITAL AUDIO BROADCASTING SUPPORTED)

The type of radio installed varies depending on the machine.
Check which type of radio is installed and refer to the applicable page.
Refer to “Radio (Digital Audio Broadcasting not supported)” on page 2-78.
Refer to “Radio (Digital Audio Broadcasting supported)” on page 2-90.

CAUTIONS ON USE

- **To ensure safe operation of the machine, always be sure to keep the volume of the radio down to a level where you can easily hear sounds from outside the machine.**
- **Do not use the radio for a long time when the engine is stopped. Doing so will drain the battery and make it difficult or impossible to restart the engine.**
- **Be careful not to allow water or other liquids to come into contact with the radio. Otherwise, it may result in malfunction.**

NAMES OF COMPONENTS

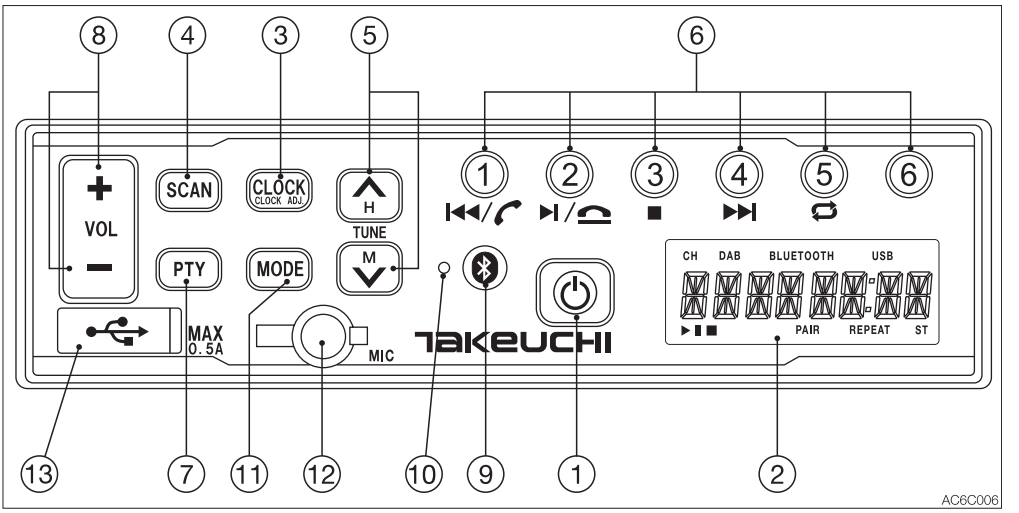

(1) POWER button
Use this button to turn on or off the radio.

(2) LCD
Home screen

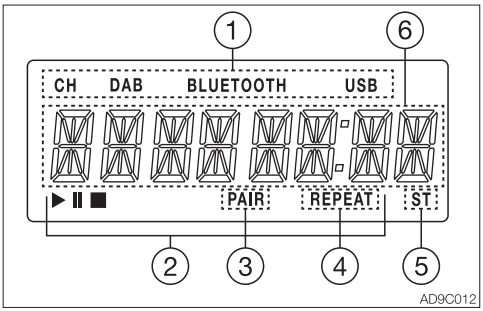

(1) Operation mode
CH: Radio mode
DAB: DAB mode
BLUETOOTH: Bluetooth mode
USB: USB mode
(2) Audio control (for USB or Bluetooth mode only)
(3) Bluetooth paired
(4) Only when the USB mode is set
(5) FM stereo reception
(6) Radio mode, Frequency, Preset Station/ Volume/Clock/Text

(3) Clock button (CLOCK/CLOCK ADJ.)
Press this button while playing the radio to display the clock. Press the button again to display the frequency.
Pressing and holding this button for at least two seconds displays ADJ and makes the time flash on the LCD, indicating that the unit is in the clock adjustment mode.
Press this button in the DAB mode to change the LCD display as follows:
Clock → CH frequency → CH list

(4) Auto store/Auto seek station (SCAN)
Press this button to automatically assign receivable radio stations to preset buttons (1 to 6).

(5) Tuning button (TUNE ⏶ ⏷)
Press and hold this button (TUNE ⏶ or TUNE ⏷) for two seconds or more to start seeking the receivable stations. The seeking stops when a station is found. To cancel tuning halfway, press the button again.
Pressing the TUNE ⏶ button starts seeking stations with higher frequency.
Pressing the TUNE ⏷ button starts seeking stations with lower frequency.

(6) Preset buttons (1 to 6) (PRESET STATION)
One FM and one MW (AM) station can be stored in each button.

(7) Program type button (PTY)
Press the PTY button in the DAB mode to display the currently received service component label, service label and PTY information.
Service component label → Service label → PTY

(8) Volume control button (VOL ✚ ▭)
Press the VOL ✚ button to increase the volume and the VOL ▭ button to decrease the volume.

(9) Bluetooth button (ᛒ)
Press this button to connect to the already paired and most recently connected Bluetooth-enabled device.

(10)Bluetooth LED
Lights up when a Bluetooth device is connected and turns off when disconnected. Flashes while searching for a Bluetooth device.

(11)Operation mode select button (MODE)
Pressing this button changes the operation mode in order: FM → MW (AM) → DAB →Bluetooth → USB.

(12)Microphone input jack (MIC)
Open the rubber cap and connect a commercial microphone (3.5 mm dia.). Be sure to close the jack with the rubber cap when not in use.

(13)USB jack
Open the rubber cap and connect to a USB flash drive with a commercially available USB extension cable.
Be sure to close the jack with the rubber cap when not in use.

Setting the clock

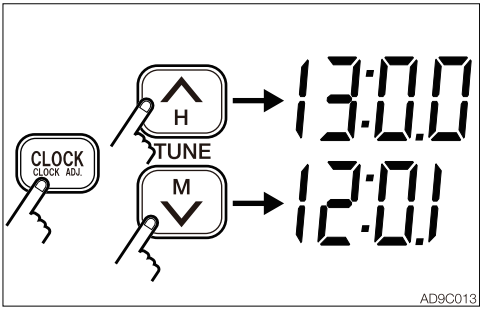

1. Press and hold the clock (CLOCK/CLOCK ADJ.) button for at least two seconds. ADJ appears on the LCD and the time starts flashing to indicate that the unit has entered the clock adjustment mode.
2. Use the [⌂] button to set the hours and the [⌄] button to set the minutes.
3. Press the clock (CLOCK/CLOCK ADJ.) button again to return to the clock display (frequency in the radio mode).

Playing DAB/DAB+

Digital audio broadcasting (DAB) is one of the digital radio broadcasting systems available today.
It delivers digital quality sound without annoying interference and signal distortion. It can also transmit text and data.

1. Select DAB by using the MODE button.
2. Press the SCAN button to automatically start seeking receivable stations and assign a station to each preset button (1 to 6).
3. Select the desired station by using any of the buttons: 1 to 6, [⏶] and [⏷].

Clock Display, DAB/DAB+ PTY

Press the PTY button to display the currently received service component label, service label and PTY information. Press the [CLOCK] button to display the clock, CH frequency and CH list.

Playing the radio

1. Select the band, FM or MW (AM) by pressing the MODE button.
2. Select the station with the preset button or the tuning button.
3. Adjust the volume with the VOL (− or +) button.

Seeking stations (auto)

Press and hold the TUNE ⏶ button for two seconds or more to start seeking stations in the higher frequency direction. Press and hold the TUNE ⏷ button for two seconds or more to start seeking stations in the lower frequency direction. The radio will stop seeking when it finds a receivable station and start playing.

Manual tuning

Press the TUNE ⏶ button to increase the frequency by one step. Press the TUNE ⏷ button to decrease the frequency by one step.

Presetting stations

1. Press the MODE button to select a band (MW (AM) or FM), and then select the desired station.
2. To assign the selected station to a preset button, press and hold the button to be assigned for three seconds or more. The number of the preset button appears on the LCD to indicate that it is stored in the preset memory.
3. To preset more stations, repeat steps 1 and 2 above.
   - One FM and one MW (AM) station can be stored in each button.

Auto storing stations (SCAN)

Press the SCAN button while playing the radio. The radio automatically starts seeking the receivable stations in the band currently selected and assigns a station to each preset button (1 to 6).
Note: The previous stations stored will be cleared (cancelled) by the auto storing. If the station stored in a preset button is not wanted, try to preset the station manually.

Playing back audio content stored on a USB flash drive

To enter the USB playback mode, first insert a USB flash drive while playing the radio and then press the MODE button. (The LCD changes to the time display and “USB” appears on the LCD.)

When playing back audio content stored on the USB drive, the following operations are available using buttons (1) to (5).

(1) Backward (I◁◁) button

Moves one track backward and starts playing it back from the beginning.

(2) Playback/Pause (▷II) button

Pauses playback when pressed during playback. When pressed again, starts playback from the point where the playback was paused.

(3) Stop (□) button

Stops playback when pressed during playback. When the Play/Pause button is pressed, the unit starts playing back the stopped track from the beginning.

(4) Forward (▷▷I) button

Moves one track forward and starts playing it back from the beginning. Pressing and holding the button will fast forward the current track.

(5) Repeat (⟲) button

When pressed during playback, the unit repeats the current track.

To cancel repeating, press the button again.

Notes:

- Do not insert or remove the USB flash drive while in the USB playback mode.
- ESPERIA makes no warranty that the unit is compatible with every USB storage device.
- Use a commercial USB extension cable to connect a USB flash drive to the unit. If you have no extension cable, use a short-type USB flash drive.
- Do not connect any device other than a USB flash drive. The USB jack cannot be used to charge a device such as a smartphone.
- Please note that ESPERIA bears no responsibility for any damage to or loss of data on the USB drive arising from the use of the unit.
- A USB flash drive supports compressed audio formats such as MPEG-1 audio layer 3 (MP3, up to 192 kbps) and Windows Media Audio (WMA).

Using Bluetooth wireless technology

You can use your Bluetooth-enabled mobile phone or audio device by connecting it by Bluetooth to the unit.

When a mobile phone is connected, incoming calls will be announced.

To use a Bluetooth device, certain profiles must be able to be interpreted.

The unit is compatible with the following profiles:

Incoming mobile phone call
HFP (Hands-Free Profile)

Bluetooth audio
A2DP (Advanced Audio Profile)
AVRCP (Audio Video Remote Control Profile)
Note: The Bluetooth® word mark and logos are owned by the Bluetooth SIG, Inc. and any use of such marks by ESPERIA is under license.

Pairing a Bluetooth-enabled device
The unit must be paired with a Bluetooth-enabled device for the first time.
Once pairing is done, the unit and the paired Bluetooth device can recognize each other.
Note: Before pairing with the unit, turn on the Bluetooth feature on the Bluetooth device. Refer to the instruction manual of the Bluetooth device for further instructions.

1. Press the MODE button to switch to the Bluetooth mode.
2. Turn on the Bluetooth feature on the Bluetooth-enabled device.
3. Press and hold the Bluetooth button until two short beeps are heard, indicating the unit has entered the pairing standby mode.
4. Select “CAR RADIO 2” on the Bluetooth-enabled-device.
5. The Bluetooth LED lights up or PAIR appears on the LCD to indicate that the pairing is complete.
6. If the pairing fails, cancel it by pressing and holding the [ⓑ] button until a beep sound is heard, and then pair the device again.

Note: Only one Bluetooth-enabled device can be paired and used at a time. To use a different device, follow steps 1 to 6 for pairing again.
Note: At power-up, the unit automatically reconnects to the device most recently connected. When you leave the machine, cancel pairing by pressing and holding the Bluetooth button until two short beeps are heard, to avoid misconnection.

Playing back audio content stored on a Bluetooth-enabled device
When a Bluetooth-enabled device has been paired with the unit (the Bluetooth LED is lit or PAIR is displayed on the LCD), press the MODE button to enter the Bluetooth mode. When the Bluetooth device is connected, use buttons (1), (2) and (4) to control the playback.

(1) Backward (⏮) button
Starts playing back from the beginning of the track currently playing. Pressing and holding the button will skip backward to the desired track.

(2) Playback/Pause (⏯) button
Pauses playback when pressed during playback. When pressed again, starts playback from the point where the playback was paused.

(4) Forward (⏭) button
Moves one track forward and starts playing it back from the beginning.

Note: The backward, playback and forward operations may not be available depending on the type of your mobile phone.
Note: If no sound is heard from the unit, check that the output destination of the music from the Bluetooth device is set to “CAR RADIO 2”.

Hands-free calling with a Bluetooth-enabled device
If a Bluetooth-enabled device has been connected, the unit enters the standby mode and waits for a call. When an incoming call arrives, “CALL IN” appears on the display, the volume of the car stereo is set to mute and the ringtone is heard from the speaker.

1. Press the start call [ ] button to answer the call.
2. Press the end call [ ] button to end the call.

Note: This unit does not guarantee connectivity between all types of mobile phones.
Note: This unit has no internal microphone for calling; please have your microphone ready.
Note: Depending on the type of mobile phone, it may not be possible to operate the unit when a call arrives, sound may not be heard, or calls may not be available.
Note: After connecting to a mobile phone, calls may not be possible if the phone is set to “Prioritize Bluetooth-enabled device”.
Note: We recommend that you perform a test call before use.

Selecting the reception area
1. Press and hold both the SCAN and the CLOCK/CLOCK ADJ. buttons for at least two seconds.
2. AREA SEL appears on the LCD.
3. Press the preset buttons (1 to 5) to display a different area on the LCD.
4. When the desired area appears, press the preset button 6 to confirm the reception area.

Area	DAB	Preset button
Japan	No	1
USA	No	2
Europe	Yes	3
Asia, Oceania	No	4
Asia, Oceania	Yes	5

Resetting the radio
If you experience problems such as buttons not working or the frequency display being incorrect, reset the unit.
Hold down Bluetooth button [ ] and press POWER button.

Note: In this case the preset memory station, the clock will be cleared.

If the device cannot be reset by the procedure above, reset it forcibly as follows.

1. Turn the starter switch to OFF.
2. Remove the fuse (Fuse No. F14) for horn. Refer to “Fuse layout and circuits protected” on page 6-6.
3. Wait for 10 seconds, and install the fuse to its initial position.

SPECIFICATIONS

Power source: .....12/24 VDC (negative ground)
Max. power consumption: .....2.0 A (at max. volume, 28.8 VDC)
Max. output power: ..16 W + 16 W (4Ω, 28.8 VDC)
Rated output power: 14 W + 14 W (1 kHz, 10%, 4Ω, 28.8 VDC)
Dimensions:.....178 (W) x 48 (H) x 100 (D) mm
DAB section
Receiving frequency range: .....174.928 to 239.200 MHz
FM section
Receiving frequency range: .....87.5 to 108.0 MHz (EU), 87.9 to 108 MHz (USA)
Usable sensitivity: .....12 dBµV
S/N Ratio:.....60 dB
MW section
Receiving frequency range: .....531 to 1602 kHz (EU), 530 to 1710 kHz (USA)
Usable sensitivity: .....32 dBµV
S/N Ratio:.....40 dB
Bluetooth standard: ..Ver. 5.0
Output:.....Class 2 (max. communication range 10 m)
Supported profiles: ...HFP V. 1.7, A2DP V. 1.3, AVRCP V. 1.6
USB standard:.....USB 2.0/1.0
Folder structure: .....8 levels
Supported files: .....65,545 files

Supported audio formats
- MP3: .....MPEG 1 Audio Layer 3
- WMA: .....Windows Media™ Audio

Supported format: ....FAT16/FAT32 file system
Max. output power: ..DC5V, 0.5 A
Mic-in jack
Size: .....3.5 mm dia.
Output voltage:.....5 VDC

Note: The appearance and specifications are subject to change for improvement without prior notice.

TROUBLESHOOTING

For symptoms not included in the table below or if the problem persists after the proper remedies have been taken, consult your sales or service dealer.

General

Symptoms	Major causes	Remedies
Radio does not operate or the display is inaccurate when the button is pressed.	• CPU malfunction due to noises, etc.	• Reset the unit by referring to “Resetting the radio”. Note that once reset, all settings are cleared; set the unit again.

DAB/DAB+

Symptoms	Major causes	Remedies
DAB/DAB+ is not received.	• The selected service may not be broadcasting.	• Select a service currently broadcasting.

Radio

Symptoms	Major causes	Remedies
Sound is noisy.	• Incorrect frequency for the station	• Tune to the correct frequency for the station.
	• Antenna (pillar antenna) is not extended.	• Be sure to extend the pillar antenna when using the radio.
	• Antenna is not grounded or properly installed.	• Consult your sales or service dealer for help.
	• The antenna is not connected to the power supply	• The power supply must be connected to the antenna with a built-in booster. For details on the connection, contact your sales or service dealer.

Radio

Symptoms	Major causes	Remedies
Unrealistic frequency is displayed.	• CPU malfunction due to noise, etc.	• Reset the unit by referring to "Resetting the radio". Note that once reset, all settings are cleared; set the unit again.

USB

Symptoms	Major causes	Remedies
No sound is heard.	• The USB flash drive has no MP3/WMA files.	• Write the MP3/WMA files correctly on the USB flash drive.
	• The files on the drive are not MP3/WMA.	• Use the MP3/WMA files properly encoded.
Sound skipping occurs. Noises are heard.	• The MP3/WMA files are not properly encoded.	• Use the MP3/WMA files properly encoded.
A USB device is not recognized.	• The USB flash drive is damaged.	• Replace the USB flash drive with a new one.
	• The USB connector is not properly connected.	• Disconnect the USB connector from the unit, and then reconnect it.
	• The USB flash drive is not formatted to FAT32/16.	• Format the USB flash drive to FAT32/FAT16, and then rewrite the MP3/WMA file. Be sure to back up the files on the drive before formatting it.

Bluetooth

Symptoms	Major causes	Remedies
A Bluetooth device cannot be connected.	• The Bluetooth device is not connected.	• Some Bluetooth devices require longer time for connection and cannot be reconnected automatically. Check if the Bluetooth button is lit. If it does not turn on after a while, re-pair the device by referring to “Pairing a Bluetooth-enabled device”.
	• Another Bluetooth device is connected.	• If another Bluetooth device is connected, re-pair the device by referring to “Pairing a Bluetooth-enabled device”.
A Bluetooth device cannot be remote controlled.	• The AVRCP profile is not connected.	• Remove all Bluetooth devices connected to the Bluetooth-enabled device, and then re-pair the device by referring to “Pairing a Bluetooth-enabled device”.
	• The connection link between the unit and the device may be corrupted.	• Pair the Bluetooth device again with the unit by referring to “Pairing a Bluetooth-enabled device”.
	• AVRCP is not supported	• Check the profiles supported by the Bluetooth-enabled device.

Bluetooth

Symptoms	Major causes	Remedies
No sound is heard from the Bluetooth audio.	• The volume on the Bluetooth-enabled device is too low.	• The volume of the Bluetooth audio playback is dependent on the volume level set on the Bluetooth device Set the volume on the Bluetooth device to a proper level.
	• Output destination of the Bluetooth device is not set to “CAR RADIO 2”.	• Make sure that the Bluetooth device’s output destination for music, etc. is set to “CAR RADIO 2”.
The Bluetooth audio is interrupted after receiving an incoming call.	• Some mobile phones cannot resume the Bluetooth audio after a phone call interruption.	• After the phone call, re-pair the mobile phone with the unit by referring to “Pairing a Bluetooth-enabled device”.

Regional limitation

To use a Bluetooth-equipped radio, “radio wave authentication” must be obtained in the country where the radio is to be used.
It can be used in the countries listed below, as of August 2017. To use it in other countries, please contact your service or sales dealer for assistance.

Countries where a Bluetooth-equipped radio can be used
Ireland, Italy, UK, Estonia, Austria, Holland, Cyprus, Greece, Croatia, Sweden, Spain, Slovakia, Slovenia, Czech, Denmark, Germany, Hungary, Finland, France, Bulgaria, Belgium, Poland, Portugal, Malta, Latvia, Lithuania, Rumania, Luxemburg, Iceland, Norway, Liechtenstein, Switzerland, Turkey, USA, Canada, Japan

AUXILIARY HYDRAULIC LINES (IF EQUIPPED)

There are two layouts used for the auxiliary lines.
Refer to the figure below to confirm which layout is used in the machine.

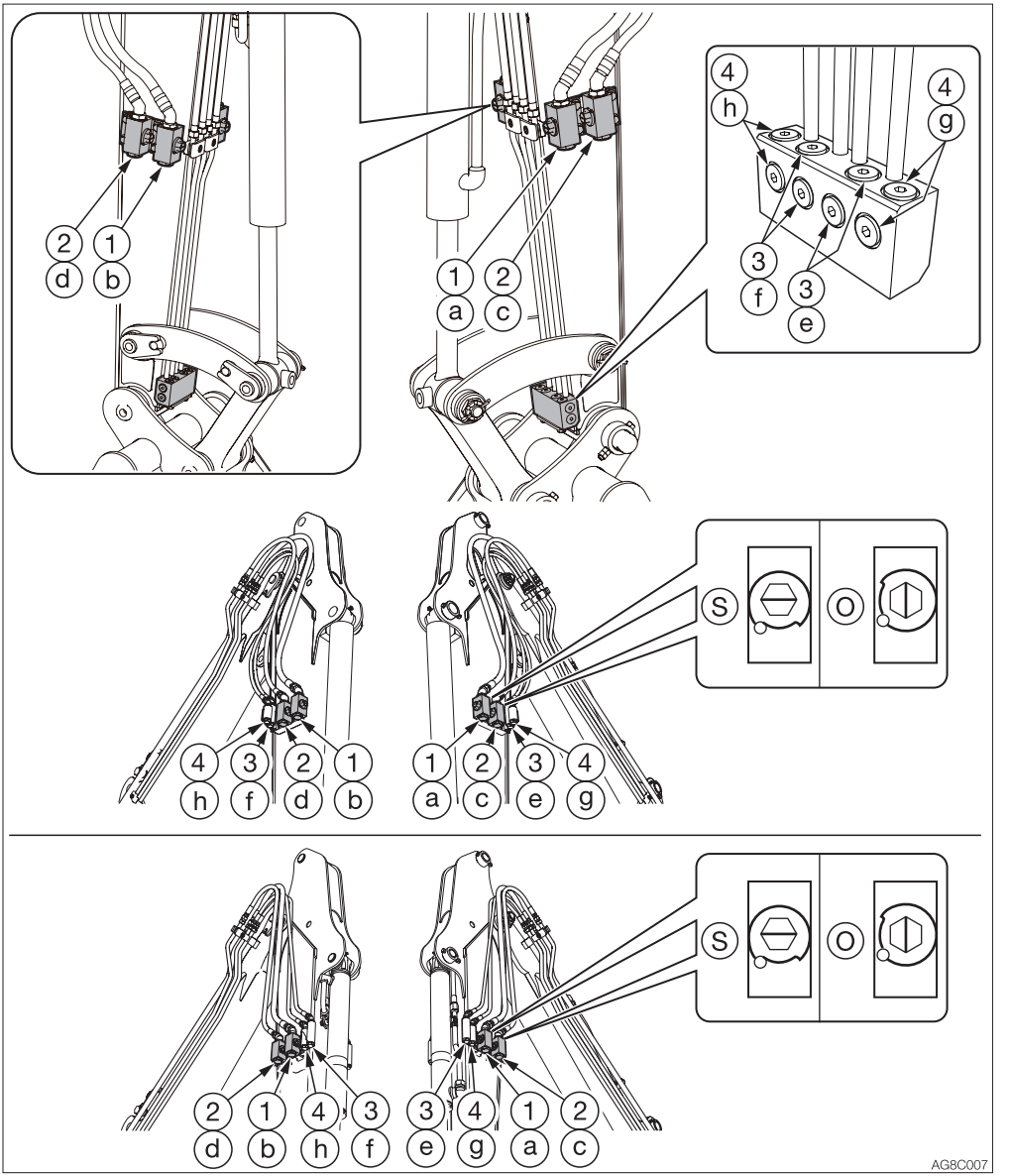

⚠ WARNING

Oil may spurt out if pipes disconnected before releasing the pressure in the hydraulic system.

- **Immediately after the engine is stopped and while the safety lock lever is still in the unlock position, turn the starter switch to ON and press each auxiliary hydraulic switch several times to release the pressure from the auxiliary hydraulic circuit.**
- **Press the air breather button to relieve the tank pressure.**
- **When disconnecting hoses, stand to the side and loosen them slowly to gradually release the internal pressure before removing.**

These lines deliver the hydraulic oil necessary for operating a hydraulic breaker, crusher or other attachments.

(1).....First auxiliary hydraulic lines
(2).....Second auxiliary hydraulic lines
(3).....Third auxiliary hydraulic lines
(4).....Fourth auxiliary hydraulic lines

Stop valve
(S) : Close
(O) : Open

Connecting the hydraulic circuits

To connect the attachment hydraulic lines, observe the following procedures:

1. Release the pressure remaining in the lines, and then close the stop valve. Refer to “Releasing the residual pressure” on page 2-104.
2. Remove the plugs.
3. Connect the attachment hydraulic lines to ports (a/c) and (b/d). When installing a hydraulic breaker, connect the supply circuit to the port (a) and the return circuit to port (b).
4. Open the stop valves. When installing a hydraulic breaker, open the selector valve (1).
   Refer to “Selector valve” on page 2-105.
5. When connecting is complete, purge air from the hydraulic lines.
   a. Start the engine and run it at a low idle speed with no load for 10 minutes.
   b. With the engine running in low idle, operate the auxiliary hydraulic switches repeatedly (approx. 10 times) to purge air from the hydraulic lines.
   c. Stop the engine and wait for at least 5 minutes until bubbles escape from the hydraulic oil in the tank.

IMPORTANT: Follow the procedures for purging air as instructed by the attachment manufacturer, if applicable.

6. Check for oil leaks.

Disconnecting the hydraulic circuits

1. Release the pressure remaining in the lines, and then close the stop valve. Refer to “Releasing the residual pressure” on page 2-104.
2. Disconnect the lines from the ports (a/c) and (b/d).
3. Install the plugs.

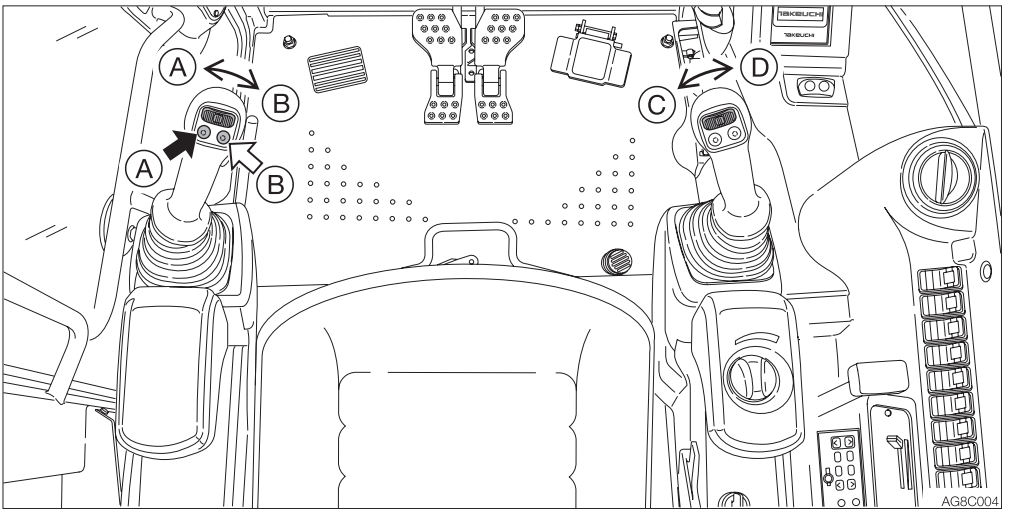

Operating

Press those buttons to control the flow of the oil in the first/second auxiliary hydraulic lines.

(A).....Hydraulic oil flows to left auxiliary line (a).

(B) .....Hydraulic oil flows to right auxiliary line (b).

(C) .....Hydraulic oil flows to left auxiliary line (c).

(D) .....Hydraulic oil flows to right auxiliary line (d).

Releasing the residual pressure

After the auxiliary hydraulic circuits have been used, pressure remains in the circuits. This is called the residual pressure. Release this residual pressure before disconnecting the lines.

Perform the residual pressure releasing within 10 minutes after the engine stopping.

1. Park the machine on a flat, rigid and safe ground.
2. Stop the engine.
3. Lower the safety lock lever to the unlocked position.
4. Turn the starter switch to the ON position.
5. Press the auxiliary hydraulic switches several times to release the residual pressure in the auxiliary hydraulic circuitry.

Selector valve

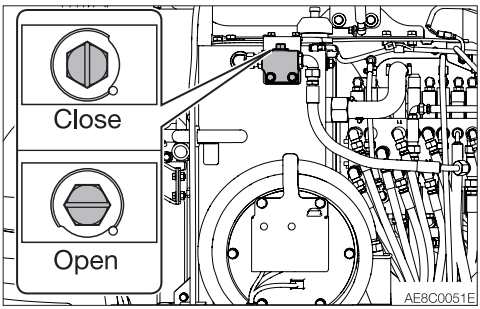

Open ..... When using a hydraulic breaker (1-way flow)
Close..... When using a reversible attachment (2-way flow)

Change the direction of the hydraulic oil flow by opening or closing the selector valve (1) inside the right side cover.

For the machine with the auxiliary 1st auto tank switch, use the switch to select the flow.

Refer to “Auxiliary 1st auto tank switch (If equipped)” on page 2-61.

Third auxiliary hydraulic switch and button (If equipped)

IMPORTANT: The specifications of the third auxiliary service differ depending on the machine used (the pipe (e) is high- or low-pressure type). Install the attachment that meets the specifications. For details on the specifications of the third auxiliary service, contact your sales or service dealer.

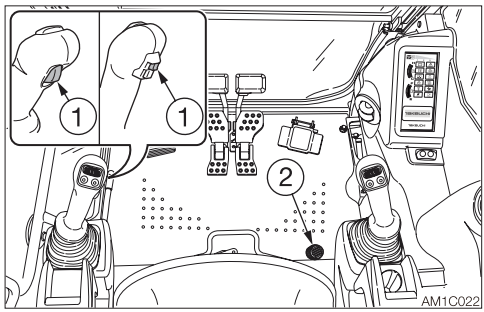

The auxiliary 3rd is mainly used for the attachment that can quickly connect/disconnect the bucket. After the engine is started, hydraulic oil constantly flows into the pipe (e). This allows the pressure in the (e) side to increase, preventing the pin inserted on the bucket from coming out. If the pressure in the (e) side drops, the warning lamp starts flashing to warn that the bucket may come out. For a safety reason, the bucket can be disconnected only when the button (1) and the switch (2) are pressed at the same time. When they are pressed, the hydraulic oil flows into the line (f) to increase the pressure there. As the result, the pin on the bucket comes out and the bucket is removed from the machine.

- **Bleeder unit for simultaneous use with the auxiliary 1st and 2nd (If equipped)**
  Pressing both the auxiliary 3rd button (1) and the switch (2) makes it possible to release internal pressure from the auxiliary 3rd (e side), auxiliary 1st and auxiliary 2nd at the same time. (The pressure is kept drawn for six seconds after the button and the switch are released.) This enables faster attachment change.

Third auxiliary hard-lock switch (If equipped)

IMPORTANT: For handling of the attachment, follow the instructions provided in the attachment manual.

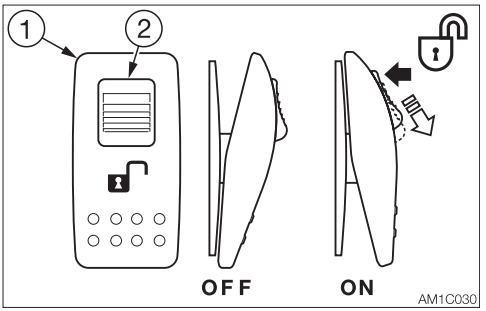

The third auxiliary hard-lock switch should be installed in the third auxiliary if the attachment to be installed on the piping of the third auxiliary is capable of hard locking.
When operating the third auxiliary, this switch is used.
The third auxiliary is mainly used to control the “quick attachment” that connects/ disconnects the bucket.
After the engine is started, hydraulic oil flows into the pipe (e) if the switch is off. This allows the pressure in the (e) side to increase, preventing the pin inserted into the bucket from coming off.
When the switch is turned on by pressing the switch (1) while pulling the orange portion (2), the warning lamp starts flashing. The hydraulic oil flows into the line (f) to increase the pressure there. As a result, the pin on the bucket comes off and the bucket is removed from the machine.

Third auxiliary hydraulic warning lamp

<Canopy>

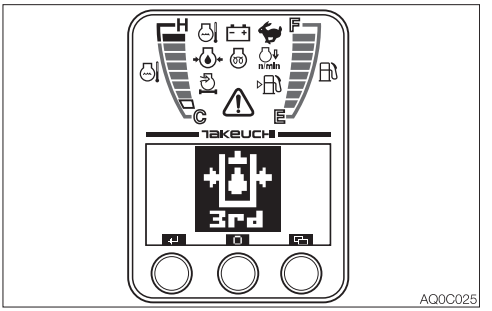

<Cab>

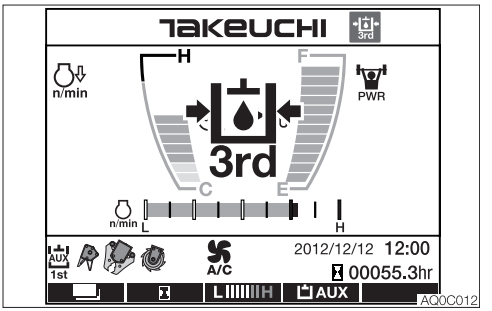

This lamp illuminates and an alarm sounds if the auxiliary 3rd hydraulic pressure drops abnormally while the engine is running.
For the machine with the hard lock feature, the lamp lights up and an alarm is sounded only when the third auxiliary hard-lock switch is turned on.

Auxiliary 2/4 select button (If equipped)

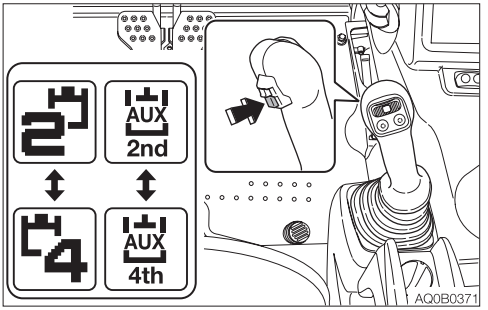

This button is used to change from the second auxiliary operation to the fourth auxiliary operation.
Pressing this button displays the second auxiliary on the LCD to indicate that the second auxiliary operation is enabled.
Pressing this button again displays the auxiliary 4th on the LCD to indicate that the auxiliary 4th operation is enabled.
The actual operation is performed with the auxiliary 2nd/4th switch (slider switch).
Refer to “Auxiliary 2nd/4th switch (If equipped)” on page 2-57.

Setting the flow rate
The flow rate in the auxiliary 1st, 2nd and 4th can be set to the desired values.
For details, refer to “Auxiliary 1st flow rate setting” on page 2-26, “Auxiliary 2nd/4th flow rate setting” on page 2-27, “Auxiliary 1st flow rate setting (1st AUX SET)” on page 2-46, “Auxiliary 2nd flow rate setting (2nd AUX SET)” on page 2-47 and “Auxiliary 4th flow rate setting (4th AUX SET)” on page 2-47.
IMPORTANT: The set values are not the guaranteed values. They should be used as rough guides.

OPERATING THE MACHINE WITH AN ACCUMULATOR (IF EQUIPPED)

⚠ WARNING

Be sure to handle the high-pressure nitrogen gas enclosed in the accumulator with care. If handled incorrectly, it could explode and cause serious injury. Strictly observe the following precautions:

- **Do not disassemble.**
- **Do not allow flame near or throw it into a fire.**
- **Do not drill, weld or fuse.**
- **Do not subject it to physical shock such as hitting, rolling or dropping.**
- **Before disposing of the unit, the sealed gas must be drained. Contact a Takeuchi service agent for help.**

For a machine with an accumulator, the residual pressure in the auxiliary hydraulic circuit or the working equipment circuit can be released even after the engine is stopped.

Releasing residual pressure

Residual pressure refers to the pressure that remains in the hydraulic circuit after the operation. Release the residual pressure as necessary by using the following steps. Perform the residual pressure releasing within 10 minutes after the engine stopping.

1. Return the throttle controller to idle the engine at low speed.
2. Lower the bucket and dozer blade to the ground.
3. Check that the safety lock lever is in the released position.
4. Stop the engine.
5. Turn the starter switch to the ON position.

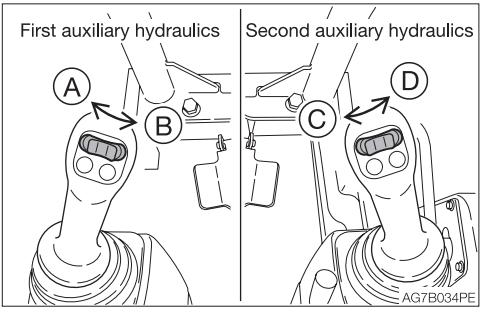

6. Move or press the auxiliary hydraulic switches several times to release the residual pressure in the circuitry.
7. Move all the control levers and pedals several times in all directions to release the pressure from the working equipment circuitry.
8. Raise the safety lock lever to engage the lock.

Lowering the boom when the engine has stopped

Perform this operation within 10 minutes after the engine stopping.

1. Sit at the operator's seat.
2. Turn the starter switch to the ON position.
3. Lower the safety lock lever to the unlock position
4. Slowly push the operating lever forward to lower the boom.

LIFTING SAFETY DEVICE (IF EQUIPPED)

The lifting safety devices include an emergency shut-off valve and an overload warning device.

Emergency shut-off valve

⚠ WARNING

- **If the boom or arm stops due to the breakage of hose, immediately move away from the load being lifted and go to a safe location.**
- **If the emergency shut-off valve hose breaks, immediately stop operation.**
- **Since the emergency shut-off valve (1) is a safety device, you must not disassemble it and/or replace or adjust its internal part. Takeuchi shall not be held responsible for any injuries, accidents or product malfunction caused by disassembly.**

The emergency shut-off valve (1) prevents the boom or arm from falling rapidly in case the hydraulic hose is broken.

Boom

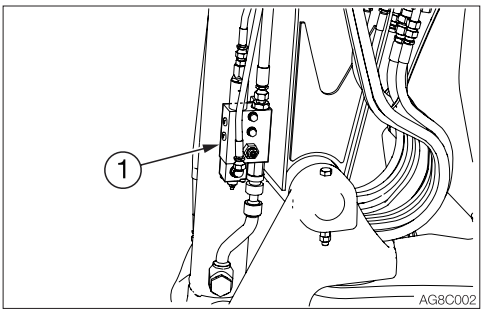

Arm (option)

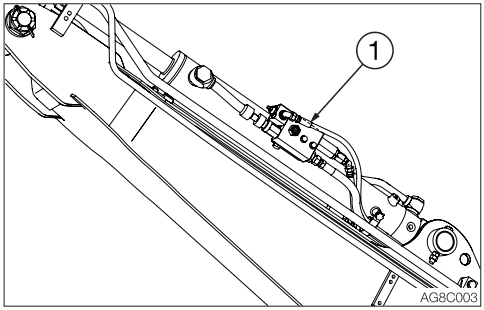

If the hose breaks and the emergency shut-off valve (1) is activated to stop the operation of boom or arm, lower the boom or arm by slowly operating the lever while ensuring safety. Ask your sales or service dealer for repair.

Overload warning device

⚠ WARNING

If the overload is not removed after the overload warning horn is sounded, the machine may tip over. If the horn starts sounding, stop operating the machine and lighten the load.

If a weight greater than the lifting capacity is applied or lifted, the overload warning device is activated and the horn sounds. (When the lift overload warning switch is turned on.)

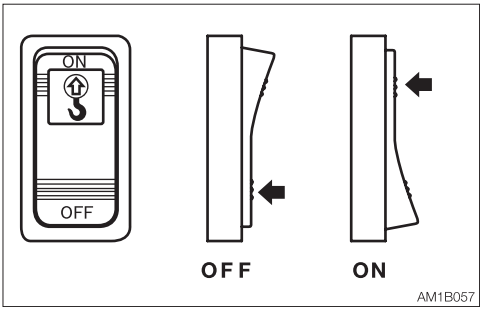

Lift overload warning switch
OFF ....Off
ON .....On

FUEL SUPPLY PUMP (IF EQUIPPED)

⚠ DANGER

Do not use the fuel supply pump for gasoline or hydraulic oil. Doing so could result in explosion or damage.
Only use the fuel supply pump for diesel fuel.

⚠ WARNING

- **Do not keep the right side cover open on a windy day or if the machine is parked on a slope.**
- **When opening and closing the right side cover, be careful not to get your hands or other parts of your body caught by the cover.**

⚠ CAUTION

Do not fill the tank with additional fuel after the fuel supply pump stops. Doing so could cause the fuel to spurt out.

This device automatically supplies fuel to the fuel tank and stops automatically when the fuel tank is full.

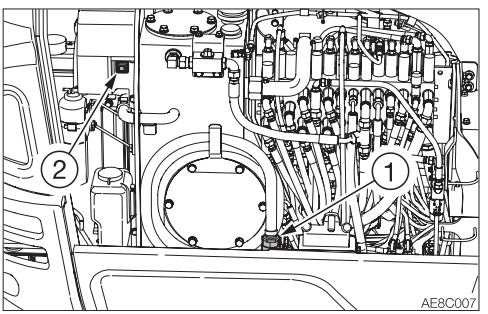

1. Open the right side cover.
2. Insert the pump's nozzle (1) in the fuel supply tank.
3. Press the switch (2).
   The pump stops automatically once the fuel tank is full.

Note: To stop filling at a desired level, press the switch (2).

4. Store the nozzle.

ENGINE AUTO STOP

⚠ WARNING

Do not leave the machine when the attachment is raised.

The term “engine auto stop” refers to a function that automatically stops the engine. When the engine auto stop function is on, the machine engine automatically stops to reduce fuel consumption, under the conditions listed below.
When the following conditions are met, the buzzer sounds and the engine stops in three minutes.
1. Safety lock lever is raised
2. Vehicle error code is not generated.
3. Engine error code is not generated.

For details about turning on or off this function, ask your sales or service dealer for help.

IMPORTANT: If the certain conditions are met when the engine auto stop is on, the buzzer sounds once every minute. The buzzer continues to sound once every minute even after the engine stops. Leaving the starter switch at the ON position will deplete the battery. Be sure to turn the switch to the OFF position after the engine is stopped.

Note:
- When the engine is stopped due to the auto stop function, the engine will not start again unless the starter key is turned to the OFF position.
- If the safety lock lever is raised to the lock position when the engine auto stop is on, the engine speed will be changed to Low Idle; control of the engine RPM will be disabled. To enable the engine RPM control, lower the safety lock lever to the unlock position.

LANGUAGE SETTING

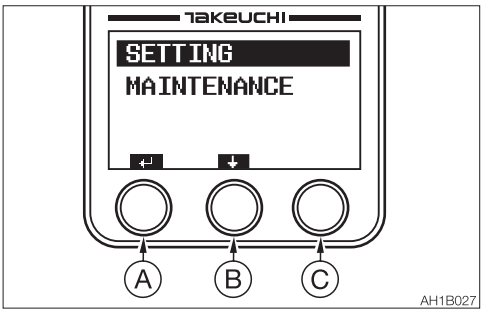

To display the side menu, turn the starter switch from the OFF to the ON position while pressing the key (C).
Press the key (A) to proceed to the screen selected by the bar.
Press the key (B) to move the selection bar.
Move to the setting selection screen (SETTING).

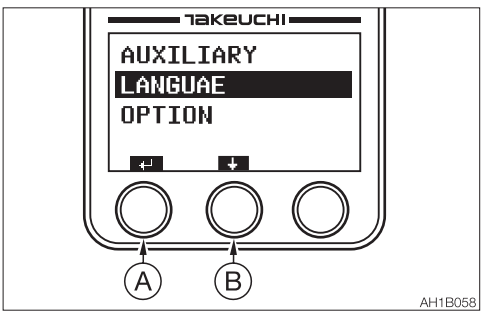

Press the key (B) to move the selection bar.
Select “LANGUAGE” and then press the key (A) to go to the language selection screen.

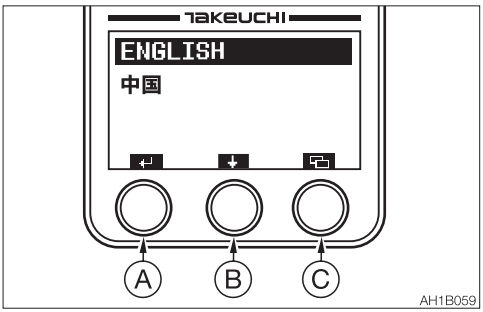

Press the key (A) to set to the language being selected
Press the key (B) to move the selection bar.
Press the key (C) to return to the language setting screen.

OPERATION



BEFORE STARTING OPERATION

GETTING ON OR OFF THE MACHINE

⚠ WARNING

- **Do not jump on or down from the machine. Never attempt to get on or off the moving machine.**
- **When getting on or off the cab, first fully open the door to the locked position and check that it does not move.**

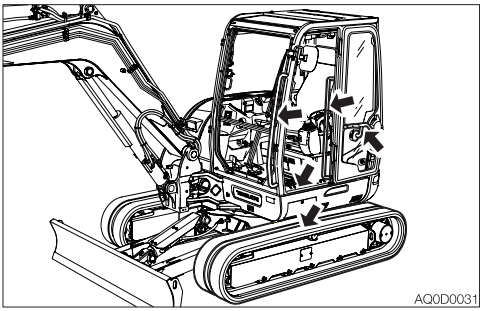

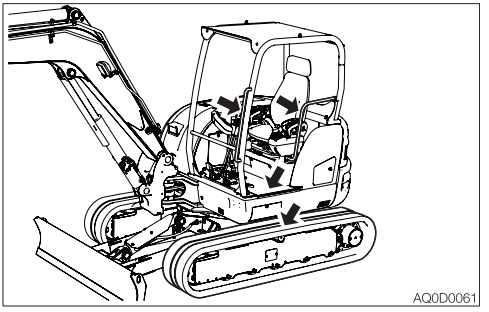

- **Climb up/down the steps holding the handrail to support your weight in a three point secure stance (hand and feet).**
- **Never use the safety lock lever or control levers as hand holds.**

WALK-AROUND INSPECTION

Perform the walk-around inspections once a day before starting the engine for the first time that day.
Refer to “MAINTENANCE, Walk-around inspection”, on pages 5-16 and 5-17.

DAILY INSPECTION

Perform the daily inspections once a day before starting the engine for the first time.
Refer to “MAINTENANCE, Daily inspection”, on pages 5-18 to 5-23.

STARTING AND STOPPING THE ENGINE

BEFORE STARTING THE ENGINE

1. Adjust the seat for a comfortable operating position.
2. Fasten the seat belt.

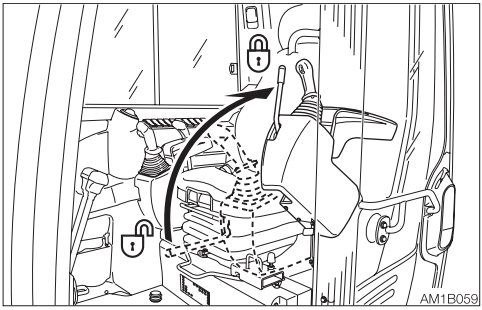

3. Check that the safety lock lever is in the locked position.

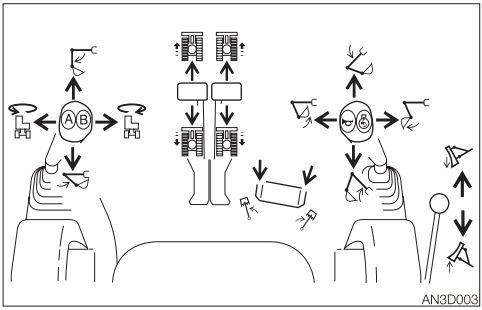

4. Check that all levers and pedals are in the neutral position.

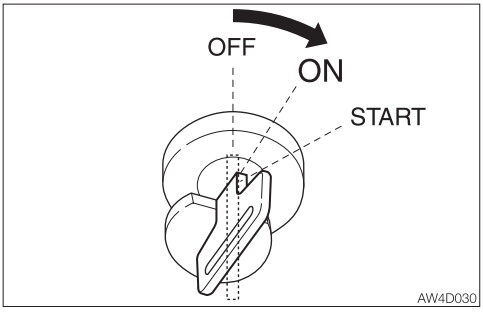

5. Insert the key into the starter switch, turn it to the ON position, then perform the following inspections:

<Canopy>

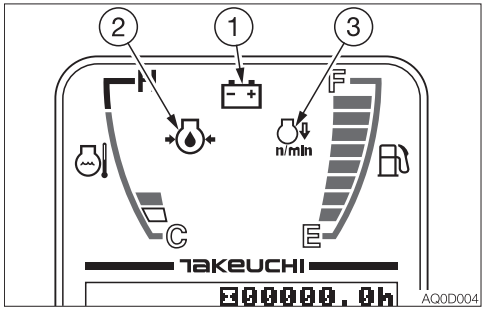

<Cab>

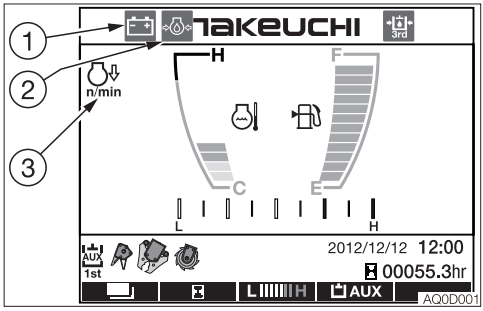

- All warning lamps flash and an alarm is sounded for two seconds. The meters also start functioning. After two seconds, the deceleration lamp (3) stops flashing and remains lit, while the battery charge warning lamp (1) and engine oil pressure warning lamp (2) remain flashing. (If the auxiliary 3rd is selected, it is also flashing.) The other lamps go out.
- Turn on the light switch to check that the boom light, front light and tail lamps turn on.
- Check the fuel level.

If a lamp does not light or the alarm is not sounded, the display or a wire may be damaged. Ask your sales or service dealer for repair.

STARTING THE ENGINE

⚠ WARNING

- **Clear all personnel from the work area.**
- **Sound the horn to warn people around the machine.**

IMPORTANT: Do not run the starter motor for more than 15 consecutive seconds. If the engine fails to start, wait for 30 seconds, and then try again to start the engine.
IMPORTANT: If the engine stalls due to fuel shortage, add fuel, turn the key to the ON position for 60 seconds, and then turn it to the START position. Running the starter for a long time before there is enough fuel is going through can cause the starter to fail.

Normal starting

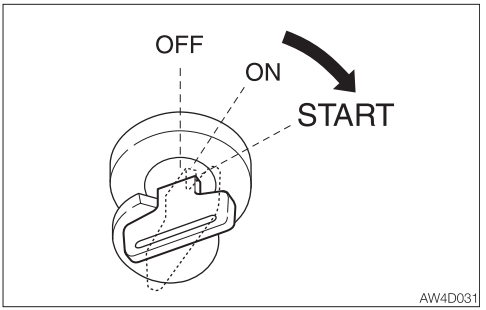

1. Turn the starter key to the START position and start the engine.
   The engine does not start unless the safety lock lever is in the locked position at this point.
   Refer to “Safety lock lever” on page 2-63.
2. Once the engine starts, release the key.
   The key automatically returns to the ON position.
3. Check that the warning lamps are off.
   For safety reasons, it is designed that the deceleration function is activated to set the engine revolutions to low idling whenever the engine is started.
   Cancel the deceleration mode by pressing the deceleration button as necessary.
4. Warm up the engine.
   Refer to “Warming up the engine” on page 3-5.
5. After the completion of the warming up, press the deceleration button to cancel the deceleration mode.

Starting in cold climates

⚠ WARNING

Never use starting fluid on this engine, as the starting fluid could cause an explosion.

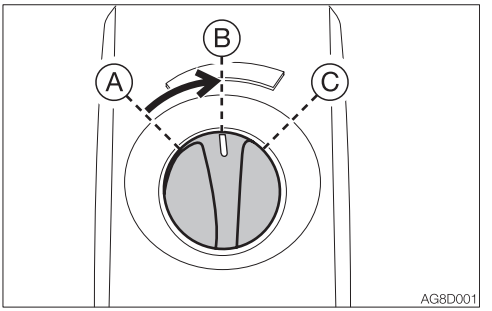

1. Turn the throttle controller to the middle position.

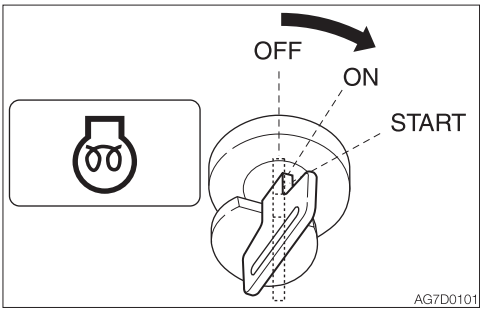

2. Turn the starter key to the ON position, and confirm that the glow lamp is on. (The glow lamp stays lit for 15 seconds when the coolant temperature is –10°C (14°F).)
3. After the glow lamp goes out, press the deceleration button (to cancel the deceleration mode), and then turn the key to the START position to start the engine.
   The engine does not start unless the safety lock lever is in the locked position at this point.
   Refer to “Safety lock lever” on page 2-63.

4. Once the engine starts, release the key. The key automatically returns to the ON position.
5. Check that the warning lamps are off.
6. Return the throttle controller to the original position and warm up the engine. Refer to “Warming up the engine” on page 3-5.

WARMING UP THE ENGINE

IMPORTANT: Do not accelerate the engine and run it without load until the engine warm up is complete.
Do not warm up the engine for a long time (20 minutes or more). When idling is required, occasionally place a load or run the engine at medium speed.

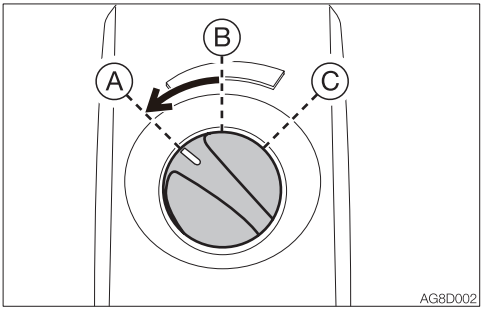

1. Return the throttle controller, and then run at a low idle with no load for 5 minutes.

STOPPING THE ENGINE

IMPORTANT: Do not stop the engine suddenly when operating with heavy loads or at the maximum speed. Doing so may cause the engine to overheat or seize. Never stop running the engine suddenly except in emergency.

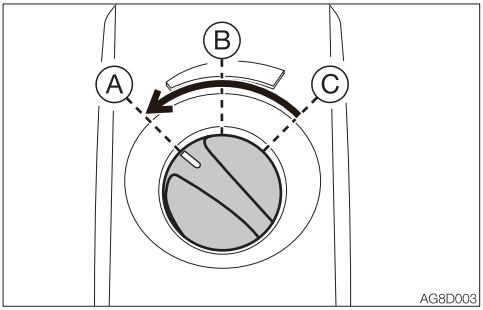

1. Return the throttle controller.
2. Idle the engine for about 5 minutes to gradually let it cool.

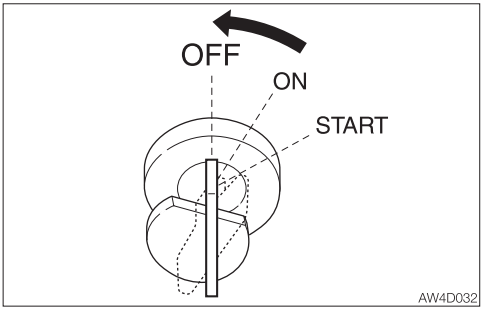

3. Turn the starter key to the OFF position to stop the engine.

OPERATING THE MACHINE

LEVER PATTERN (ISO PATTERN)

⚠ WARNING

- Before starting operation, carefully check which lever pattern you are going to use.
- It is described using the ISO pattern in this manual.

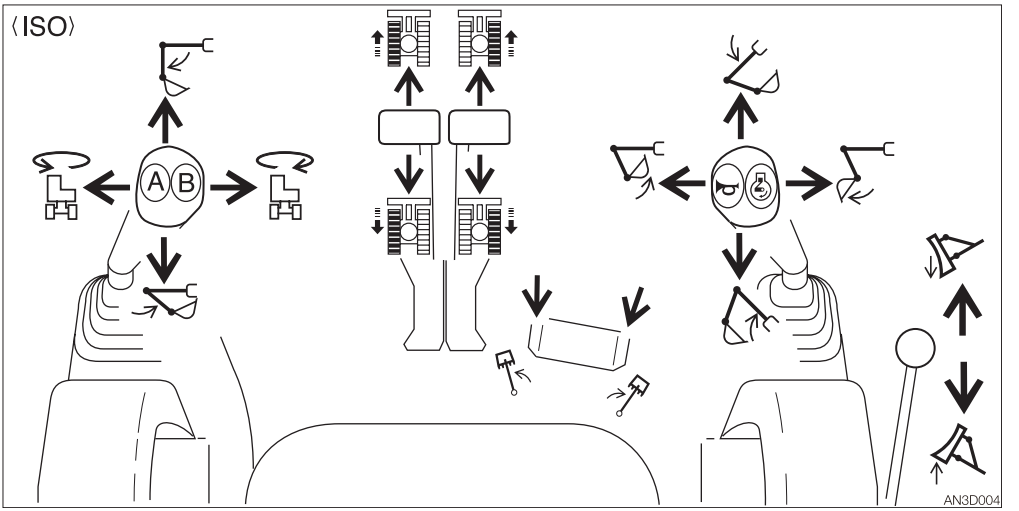

	Left crawler forward		Right crawler forward
	Left crawler reverse		Right crawler reverse
	Arm out		Boom lower
	Arm in		Boom raise
	Upperstructure slew left		Bucket load
	Upperstructure slew right		Bucket dump
	Boom swing left		Dozer blade lower
	Boom swing right		Dozer blade raise

LEVER PATTERN (G PATTERN) (IF EQUIPPED)

⚠ WARNING

- **Before starting operation, carefully check which lever pattern you are going to use.**
- **It is described using the ISO pattern in this manual.**

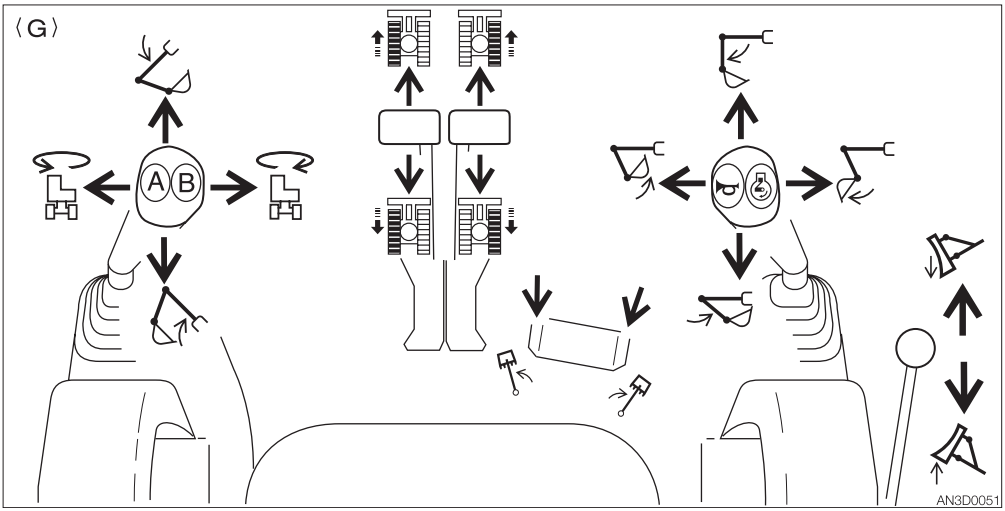

	Left crawler forward		Right crawler forward
	Left crawler reverse		Right crawler reverse
	Boom lower		Arm out
	Boom raise		Arm in
	Upperstructure slew left		Bucket load
	Upperstructure slew right		Bucket dump
	Boom swing left		Dozer blade lower
	Boom swing right		Dozer blade raise

Refer to “Selecting a lever pattern” on page 8-5.

WARMING UP THE MACHINE (HYDRAULIC OIL)

⚠ WARNING

Operating the working equipment without warming up the machine (hydraulic oil) is dangerous, as the working equipment cannot response to controls quickly or may move in unexpected ways, and the safety devices may not operate properly. Be sure to sufficiently warm up the machine.

IMPORTANT: Do not operate the levers too quickly when the hydraulic oil temperature is below 20°C (68°F). The proper hydraulic oil temperature during operation is 50 to 80°C (122 to 176°F). If operations must be performed at lower temperatures, heat up the hydraulic oil to at least 20°C (68°F).

Normal warm-up

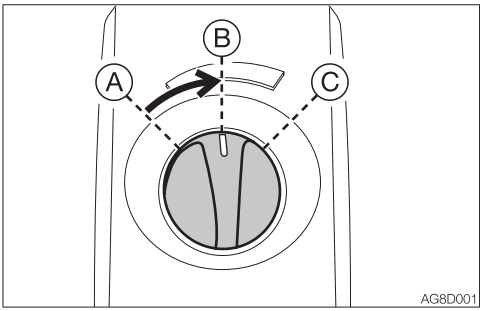

1. Turn the throttle controller to the middle position, and then run the engine at medium speed for about five minutes with no load.

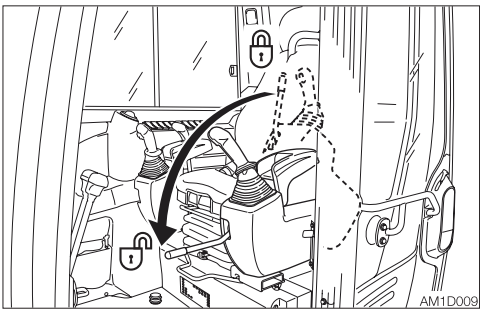

2. Fully lower the safety lock lever to disengage the lock and lift the bucket from the ground.

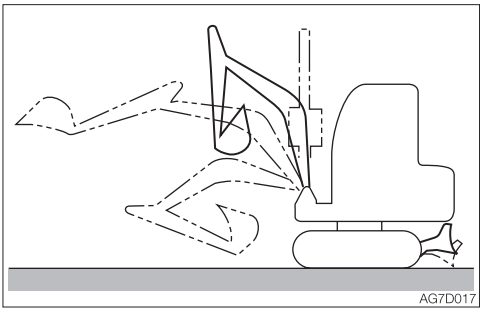

3. Extend and retract each of the cylinders slowly several times with no load.

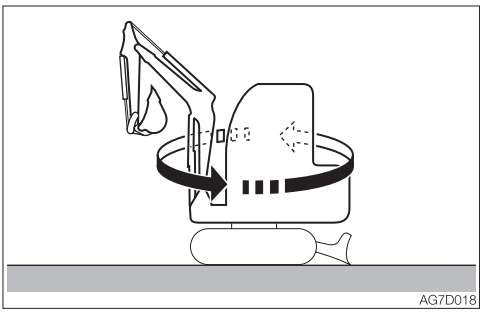

4. Slew slowly to the left and the right several times.

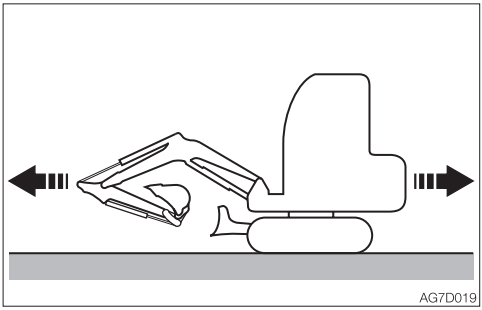

5. Travel slowly forward and in reverse several times.

Warm-up in cold climates

1. Perform the normal warm-up procedure.

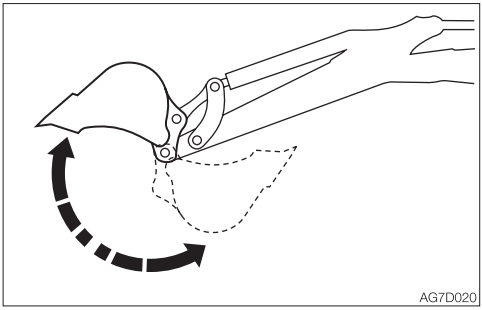

2. Set the bucket cylinder at the stroke end and keep it there.
   Do not keep this condition for more than 30 seconds.
3. Repeat Step 2 until the bucket operating speed becomes normal.

INSPECTION AFTER WARM-UP

After warming up the engine and machine (hydraulic oil), perform the checks and inspections described below, and repair if necessary.

<Canopy>

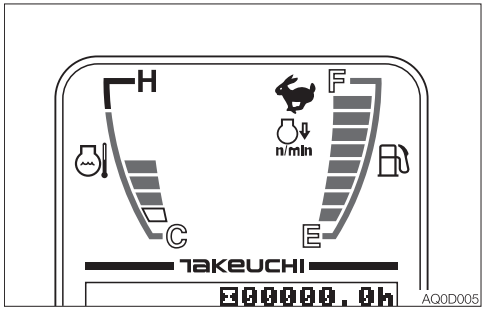

<Cab>

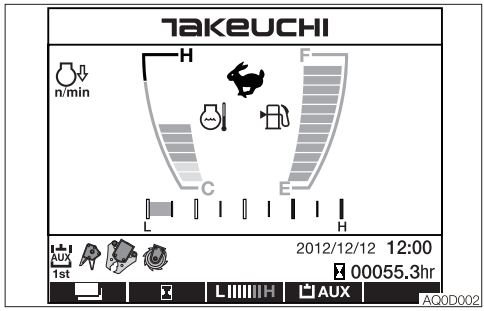

1. Check that the warning lamps and meters are as follows:
   · Are all warning lamps off?
   · Is the water temperature level within the green range?
2. Check that there are no irregularities in the exhaust color, sound and vibrations.

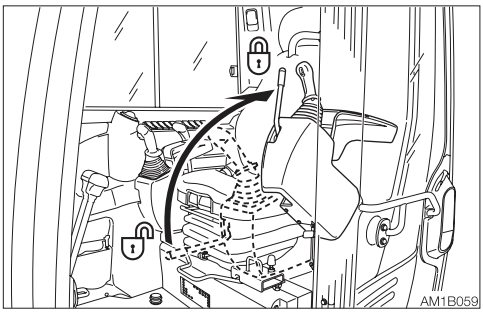

3. Raise the safety lock lever to the locked position, and then check that the operating and travel levers are locked.

OPERATING THE TRAVEL LEVERS/ PEDALS

⚠ WARNING

- Never allow anyone to enter the machine's slewing radius and path.
- Signal your intention to move by sounding the horn.
- There is a blind spot in the rear of the machine. Before traveling in reverse, as necessary, swing the cab around in reverse to check that the area is safe and clear.

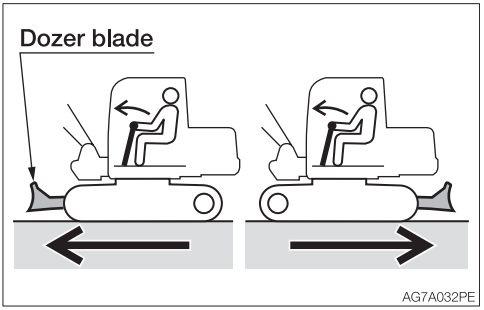

- Before operating the travel levers/ pedals, make sure that the dozer blade is to the front of the operator's seat. Remember that when the dozer blade is to the rear of the operator's seat, the travel levers/pedals must be operated in the reverse direction from when it is to the front.
- Clear all obstacles from the path of the machine.

Moving the machine forward and backward

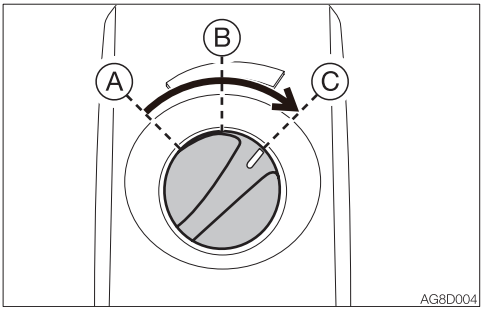

1. Turn the throttle controller and increase the engine speed.

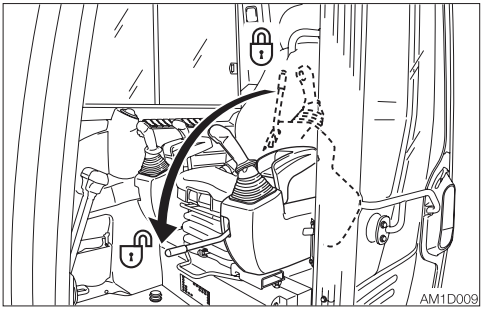

2. Fully lower the safety lock lever to disengage the lock.

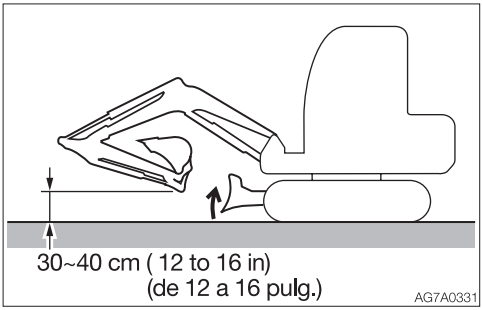

3. Fold the hoe attachment and lower it 30 to 40 cm (12 to 16 in.) above the ground.
4. Lift the dozer blade.
5. Operate the left and right travel levers as below.

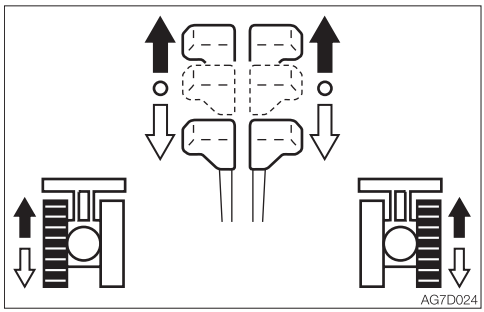

When the dozer blade is in front of the operator's seat:

➡ To move forward:
Tilt the levers forward.

⇨ To move backward:
Tilt the levers backward.

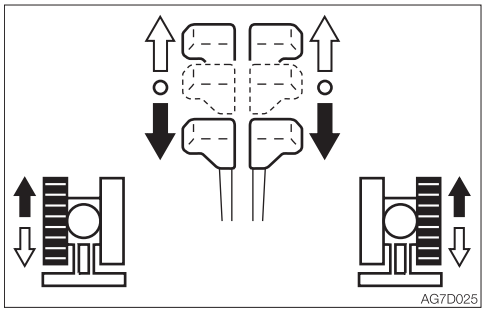

When the dozer blade is behind the operator's seat:

➡ To move forward:
Tilt the levers backward.

⇨ To move backward:
Tilt the levers forward.

Traveling in 2nd (High) speed

⚠ WARNING

When a load greater than a set value is applied during traveling in 2nd (high) speed, the speed will automatically slow down to 1st (low) speed. When the load becomes lighter, the speed will increase and return to 2nd (high) speed. It should be noted that the travel speed changes depending on the load condition (for machines with the automatic travel shift-down system).

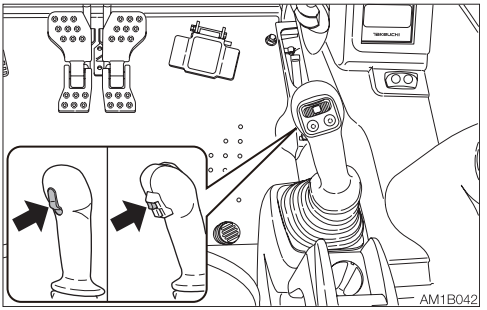

Press the travel speed switch to set to the 2nd (high) speed, and press it again to return to the 1st (low) speed.

Pivot turn

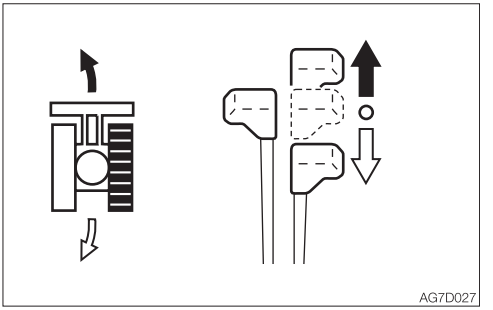

Turning to the left when stopped:

➡ To turn forward to the left:
Tilt the right lever forward.

⇨ To turn backward to the left:
Tilt the right lever backward.

To turn to the right, operate the left lever in the same way as for the right lever.

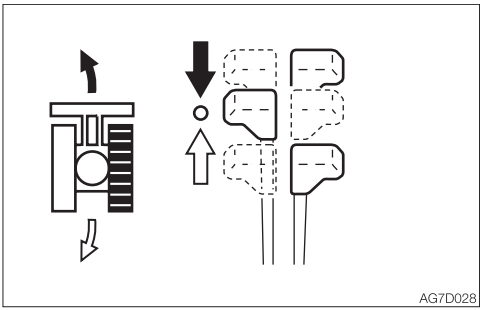

Turning to the left while traveling:

➡ To turn left while traveling forward:
Set the left lever to neutral.

⇨ To turn left while traveling backward:
Set the left lever to neutral.

To turn to the right while traveling, operate the right lever in the same way as for the left lever.

Spin turn

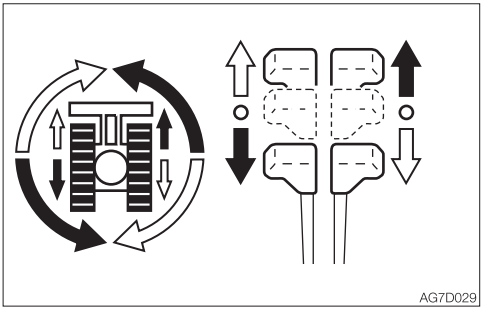

➡ To spin left:
Tilt the left lever backward and the right lever forward.

⇨ To spin right:
Tilt the right lever backward and the left lever forward.

STOPPING TRAVEL

⚠ WARNING

- **Park the machine on a flat, rigid and safe ground. Set the parking brake. If you must park on a slope, chock the tracks to block the machine.**
- **If any control is accidentally touched when the safety lock lever is not locked, the machine may suddenly move and cause serious injury or death.**

⚠ CAUTION

Never stop running the machine suddenly except in emergency. Stop in good time, if possible.

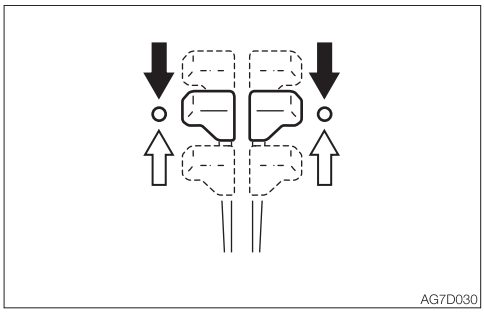

1. Set the left and right travel levers slowly to the neutral position. The machine stops.

OPERATING THE WORKING EQUIPMENT

⚠ WARNING

- **Before starting operation, carefully check which lever pattern you are going to use.**
- **It is described using the ISO pattern in this manual.**

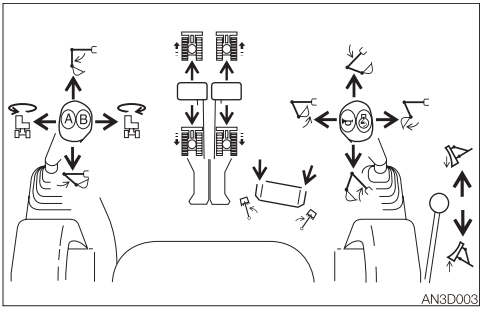

Use the right operating lever to operate the boom and bucket.
Use the left operating lever to operate the arm and slewing.
Return the operating levers to the neutral position to stop the hoe attachments.

1. Lower the safety lock lever to the unlocked position.
2. Set the pedal cover to the unlocked position.

Slewing

⚠ WARNING

Check the surrounding area for safety before slewing.

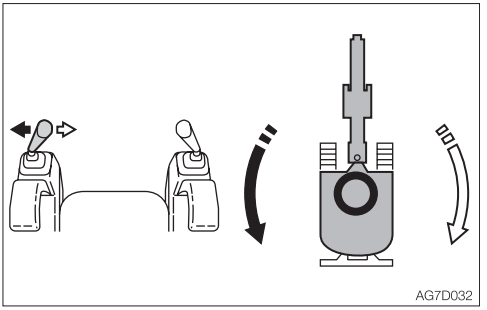

➡ Upperstructure slew left:
Tilt the left operating lever to the left.
⇨ Upperstructure slew right:
Tilt the left operating lever to the right.

Operating the boom

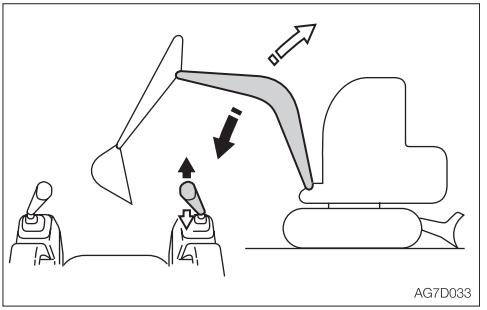

➡ Boom lower:
Tilt the right operating lever forward.
⇨ Boom raise:
Tilt the right operating lever backward.