LEVERS AND PEDALS

SAFETY LOCK LEVER

⚠ WARNING

- **Before standing up from the operator's seat to open/close the window or remove/install the lower window, lower the working equipment to the ground, raise the safety lock lever to engage the lock and stop the engine. If any controls should be accidentally touched when the safety lock lever is lowered (unlocked), the machine will suddenly move and cause serious injury or death.**
- **Be careful not to touch the operating levers when raising or lowering the safety lock lever.**
- **Before leaving the operator's seat, lower the working equipment to the ground, raise the safety lock lever to engage the lock and stop the engine. Also, be sure to remove the key, lock the door and covers, take it with you and store it in a specified place.**

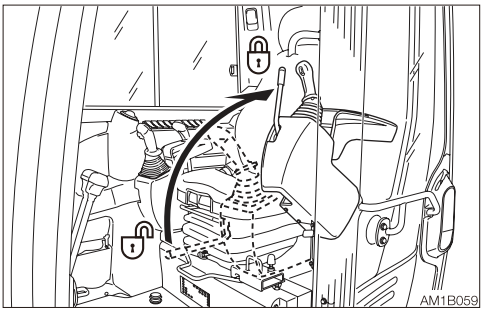

This device is for locking the operations of hoe attachment, slewing, auxiliary, dozer blade and traveling.
When the lever is raised, the lever stand springs up to lock the lever.

Safety start function
When the lever is in the unlock position, the engine cannot be started.

OPERATING LEVERS

⚠ WARNING

- **Before starting operation, carefully check which lever pattern you are going to use.**
- **It is described using the ISO pattern in this manual.**

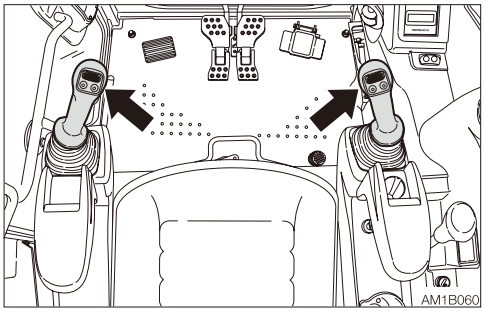

Use these levers to operate the boom, arm, bucket and upperstructure.
Refer to "Lever pattern" on pages 3-6 and 3-7.
Refer to "Operating the working equipment" on pages 3-14 and 3-15.

BLADE LEVER

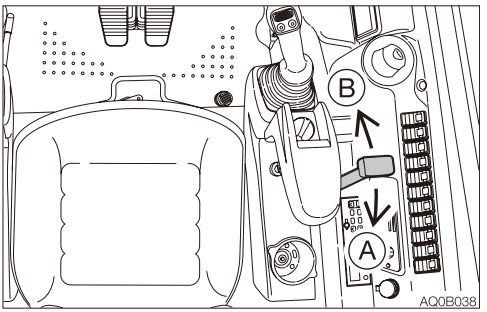

Use this lever to operate the dozer blade.
(A).....Blade up
(B) .....Blade down
Refer to “Operating the dozer blade” on page 3-15.

Float button (If equipped)

⚠ WARNING

- **Do not press the float button while the machine is raised by the blade. Doing so will cause the machine to fall. If you must work beneath the raised machine, always use a secure support to keep the machine raised.**
- **Do not press the float button while the blade is raised. Doing so will cause the blade to fall. Lower the blade to the ground before pressing the float button.**
- **Do not travel forward while the blade is in the float mode.**

Float operation

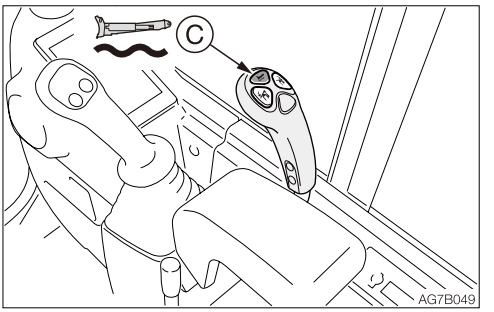

Button (C).....Float mode
Press the float button (C) to set the dozer blade to the float mode.
To cancel the float mode, press the float button (C) again. The float mode is temporally cancelled when the blade lever is tilted backward. To return to the float mode, tilt the blade lever back to the neutral position. Take caution when returning to the float mode.

TRAVEL LEVERS/PEDALS

⚠ WARNING

- **Before operating the travel levers/pedals, make sure that the dozer blade is to the front of the operator's seat. Remember that when the dozer blade is to the rear of the operator's seat, the travel levers/pedals must be operated in the reverse direction from when it is to the front.**
- **Do not rest your foot on the pedal unless operating it for traveling. If the pedal is accidentally stepped while working, the machine may suddenly move and cause serious injury or death.**

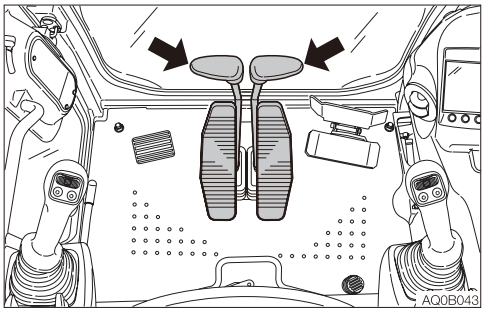

Use these levers/pedals to move forward or backward and to change directions.
Refer to "Operating the travel levers/pedals" on page 3-10.

BOOM SWING PEDAL

⚠ WARNING

Keep the pedal cover to the locked position when not using the pedal. Stepping on a pedal accidentally when it is not locked may cause accidents.

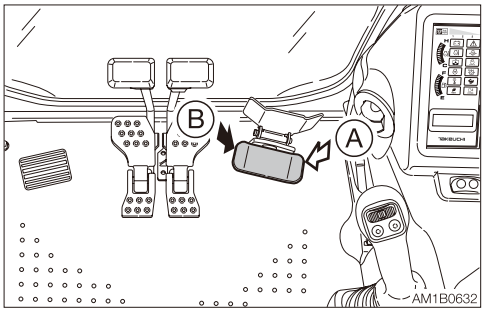

Use this pedal to operate the boom swing.
(A).....Boom swing right
(B) .....Boom swing left
Refer to "Operating the boom swing" on page 3-15.

Pedal lock

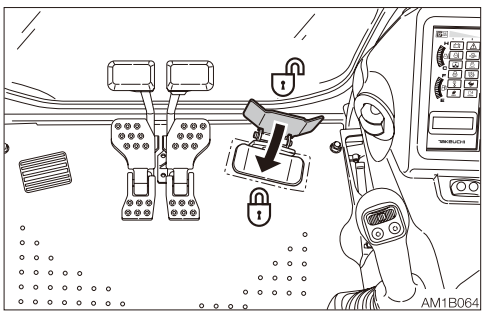

Set the pedal cover over the pedal to lock it.
Open the pedal cover from the pedal to unlock it.

MEMO

ACCESSORIES

HEATER

⚠ WARNING

- Always be sure to allow sufficient ventilation.
- Do not place combustible or explosive objects near the air outlets.

Heater fan switch

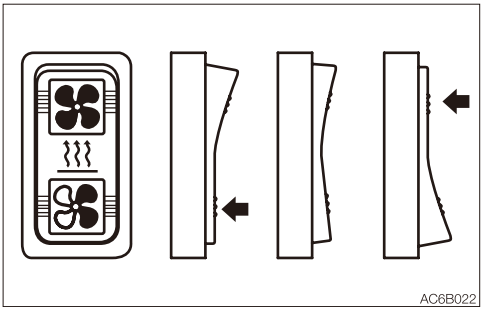

..... Low
Neutral .... OFF
..... High

Ventilation/Circulation lever

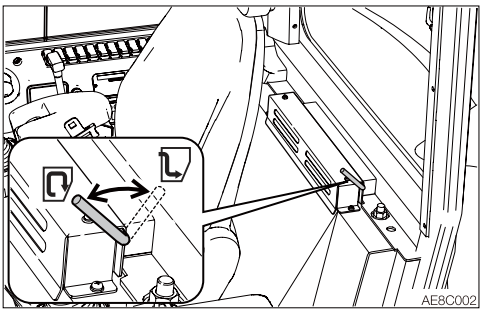

Use this lever to switch between Ventilation and Circulation.
..... Full ventilation: For heating with ventilation. Intake of external air. Defrosting the windows.
..... Circulation: Quick heating or when external air is dirty.

Outlets

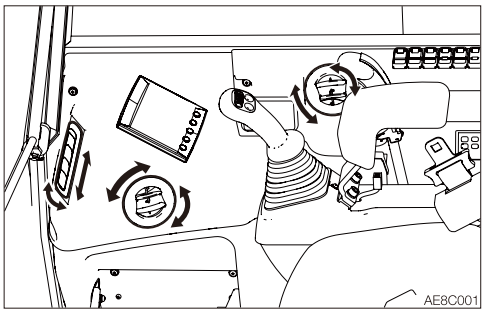

Move the louver up and down or left and right to adjust the air flow direction and amount.

Heater valve
Coolant circulates in the heater even when the heater switch is turned off.
When the heater is no longer needed, stop coolant circulation as follows.

IMPORTANT: Use the valve (1) either fully open or fully closed.
Cooling water could leak when the valve is partly opened.

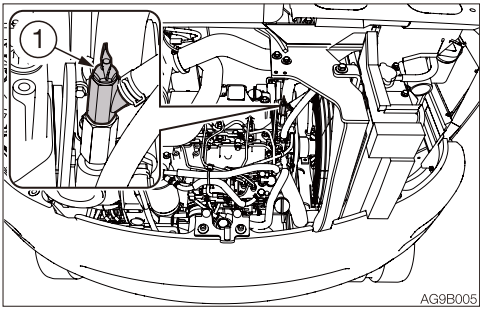

1. Park the machine on a level surface and stop the engine.
2. Open the engine hood.
3. Turn the valve (1) clockwise until it stops to close it.

Filters
Clean the filters immediately after operating in dusty places.
If the filters are clogged, the air flow is reduced and a booming sound is heard from the heater unit.
Refer to “Cleaning the air filter (AC)” on page 5-37.

AIR CONDITIONER (IF EQUIPPED)

CAUTIONS ON USE

Ventilate periodically

- When using the air conditioner over an extended period of time, open the windows about once each hour to let in fresh air.
- Your eyes may become irritated if you smoke while using the air conditioner. If this happens, open the windows to let in fresh air. Smoking particularly irritates the eyes when the air conditioner is being used. Since the humidity in the cab drops, the cornea becomes dry.
- If the outside air is dirty, set the air conditioner to the circulation mode.

Always maintain good visibility

Working with dirty windows or fogged windows restricts visibility and is dangerous. Always clean dirt and moisture off the windows before working.

- The windows tend to get foggy when the humidity is high. If this happens, turn on the air conditioner to use outside air and the defroster to get rid of the fog.
- If the air conditioner is set to high when using the defroster, the difference between the external and internal temperatures increases, resulting in frost on the outside of the windows. If this happens, either turn off the air conditioner or move the temperature control knob to the right end to increase the internal temperature.
- Mist may blow out of the air outlets. This is not a malfunction. When moist air passes through the evaporator on the air conditioner unit, water particles in the air freeze and are emitted as mist.

Do not overcool

For health reasons, the air inside the cab should be kept at a temperature at which you feel a little cool when entering the cab from outside (a difference of 5 to 6°C (9 to 12°F)). Remember to adjust the temperature properly.

Do not turn on the air conditioner until the engine is started

To avoid placing an excessive load on the compressor, wait until the engine is started and is running smoothly before turning on the air conditioner.

Let hot air out first

If the machine has been parked in the sun, open the windows and door to let the hot air out of the cab before using the air conditioner.

Caution on refrigerant (gas)

If the refrigerant comes in contact with skin or eyes, it may cause frostbite or eye damage. Never touch the refrigerant or loosen the parts on the cooling circuit.
If the refrigerant gas leaks, keep flames away.

Off-season inspection

Even off season, run the air conditioner for 3 to 5 minutes at least once a week to maintain oil in the various parts of the compressor.

NAMES OF COMPONENTS

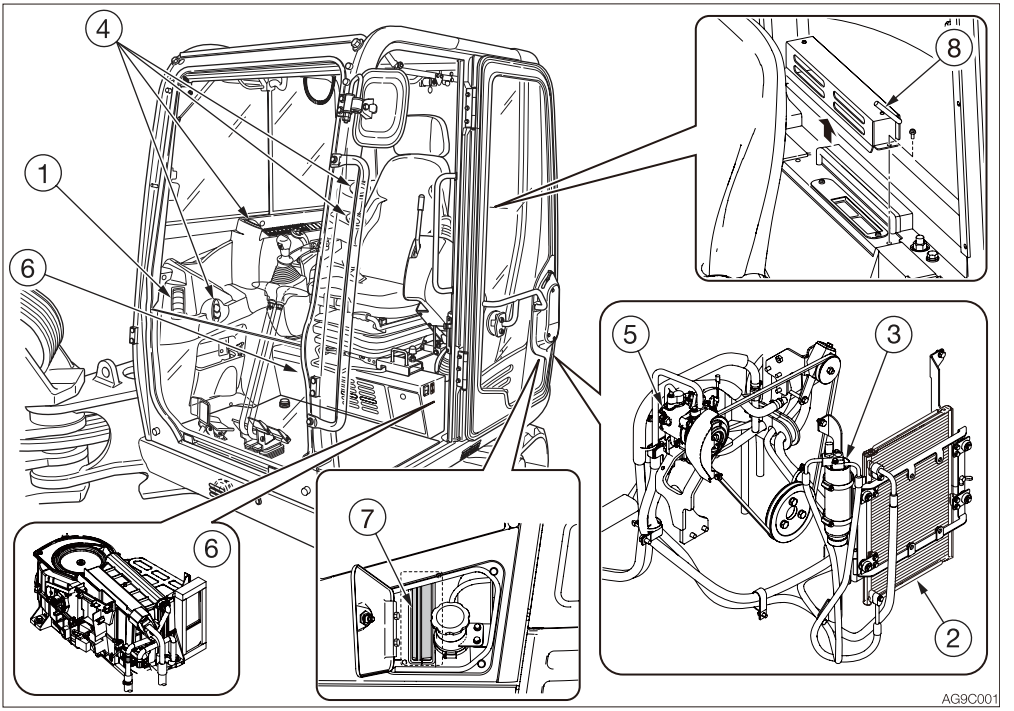

1. Defroster
2. Condenser
3. Receiver dryer
4. Outlets
5. Compressor
6. Air conditioner unit
7. Filter
8. Ventilation/Circulation select lever

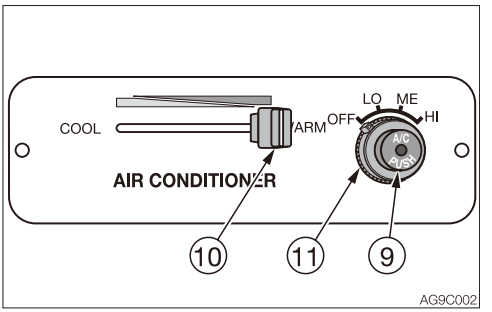

Control panel

9. Air conditioner switch
10. Temperature control knob
11. Fan dial

Air conditioner switch

IMPORTANT: To avoid placing an excessive load on the compressor, wait until the engine is started and is running smoothly before turning on the air conditioner.

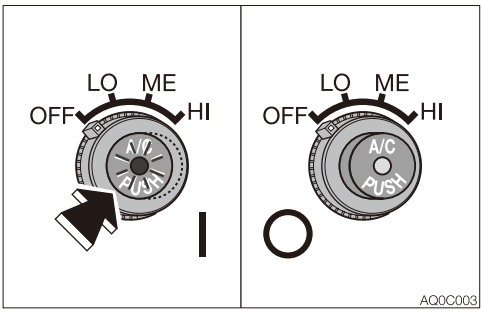

Use this switch to turn on or off the cooling/dehumidifying function. When this switch is pressed while the engine is running with the fan dial set to ON, the lamp lights up and the cooling/dehumidifying function is turned on. Press this switch again or turn the fan dial to OFF to turn off the cooling/dehumidifying function.
Lamp is off ....OFF
Lamp is on ....ON
Note: To prevent leakage of refrigerant gas from the compressor's seal, operate the air conditioner at least once a week, regardless of the season.
Note: The air conditioner will not function if the temperature in the cab is low (3°C (38°F) or lower).

Fan dial

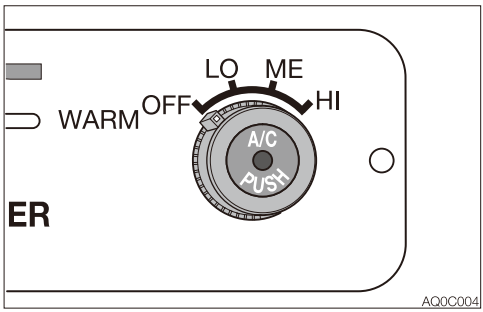

Use this dial to select the fan speed from the three levels. Turning this dial to the OFF position turns off the air conditioner.

OFF ....Turning off the fan and the air conditioner.
LO .....Low
ME .....Medium
HI .....High

Temperature control knob

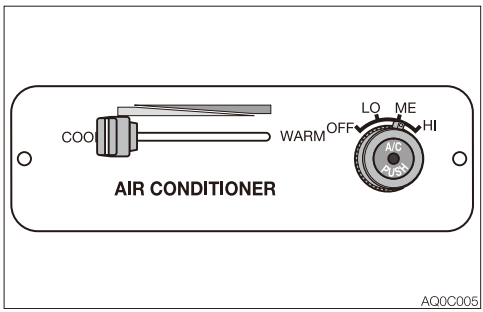

Use this knob to adjust the air temperature.
COOL..... Decreases the temperature
WARM..... Increases the temperature
Note: No warm air is emitted if the temperature of the engine coolant is low.

Outlets

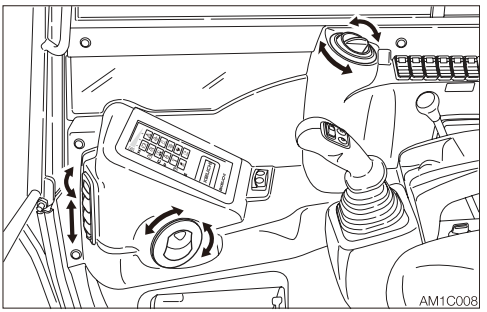

Move the louvers up and down or left and right to adjust the air flow direction and amount.

Ventilation/Circulation select lever

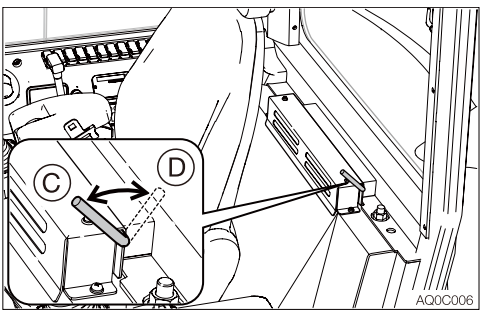

Use this lever to select between Ventilation and Circulation.
(C) .....Circulation
• Cool or heat the cab quickly
• When external air is dirty
(D) .....Ventilation
• Lets in fresh air
• Removes frosting from the windows
• Ventilates while cooling or heating

Operation

Dehumidifying and Heating (in cold climates or when the humidity is high)

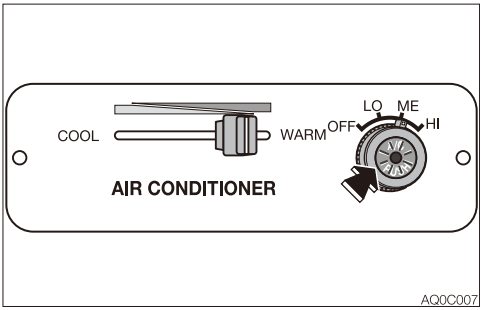

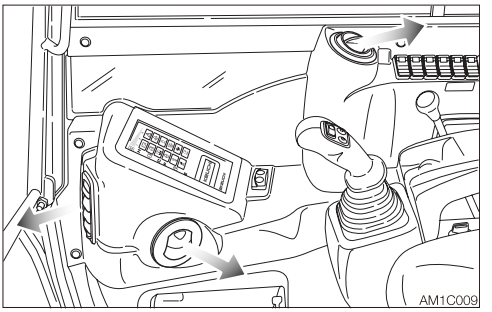

Arrange the foot outlets and the defroster so that they are directed to the front window. Let the dehumidified warm air blow on the front window, to prevent frosting.

1. Set the desired temperature by turning the temperature control knob to between the center and the right end.
2. Set the fan dial to the desired position.

Cooling

⚠ CAUTION

- **When the air conditioner is set to the circulation mode, the air in the cab gradually becomes dirty. Switch to the "ventilation" to ventilate once a comfortable temperature is obtained.**
- **Excessive cooling can be harmful to your health. It is best to keep the air inside the cab only about 5 to 6°C (9 to 12°F) cooler than the outside air.**

Note: If the machine has been parked in the sun, open the windows and door to let the hot air out of the cab before using the air conditioner.

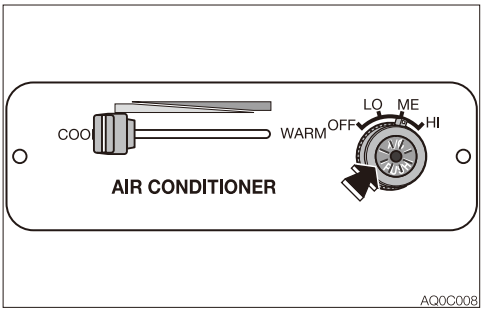

1. Set the fan outlet to the desired position.
2. Set the temperature by moving the temperature control knob to between the center and the left end.
3. Set the fan dial to the desired position.

Quick cooling

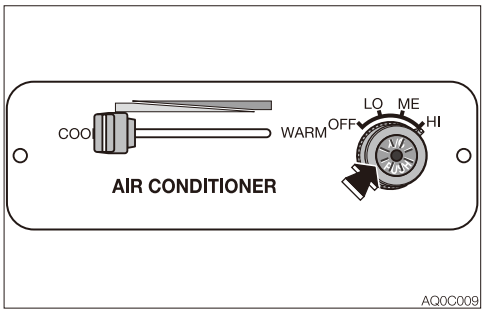

1. Set the fan outlet to the desired position.
2. Move the temperature control knob to the left end.
3. Set the fan dial to "HI".
4. Tilt the Ventilation/Circulation select lever forward to select Circulation.

Heating

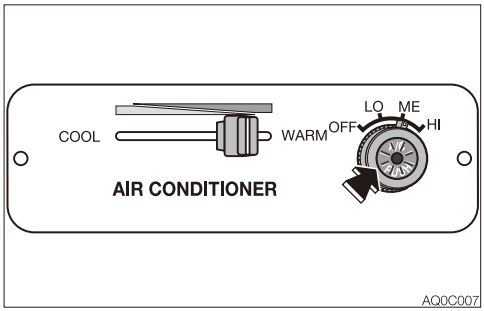

1. Arrange the outlet louvers so that air can be directed to the feet.
2. Set the fan dial to the desired position.
3. Set the temperature by moving the temperature control knob to between the center and the right end.
   For the highest temperature, move the knob all the way to the right.
4. Turn the fan dial to the OFF position to turn off heating.

Defrosting or defogging the windows
Note: If the air conditioner fan is set to High when using the defroster, the difference between the external and internal temperatures increases, resulting in frost on the outside of the windows. If this happens, either turn off the air conditioner or move the temperature control knob to the right end to increase the internal temperature.

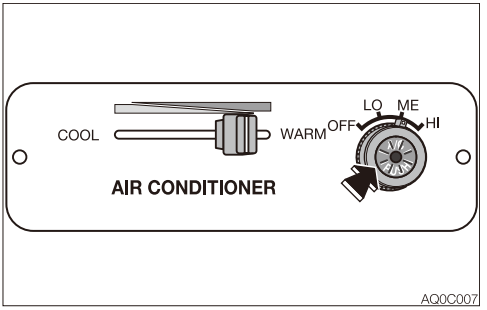

1. Set the temperature by moving the temperature control knob to between the center and the right end.
2. Set the fan dial to the desired position.
3. Tilt the Ventilation/Circulation select lever backward to select Ventilation.
4. Arrange the foot and defroster outlets so that they are directed to the front window.

CUP HOLDER

⚠ CAUTION

- Drinks may be spilled due to vibration when the machine is operating or traveling. Be particularly careful not to burn yourself with hot drinks.
- Note that the power supply socket or other electric parts may be damaged if drinks are spilled on them. Be careful not to spill fluid on them.

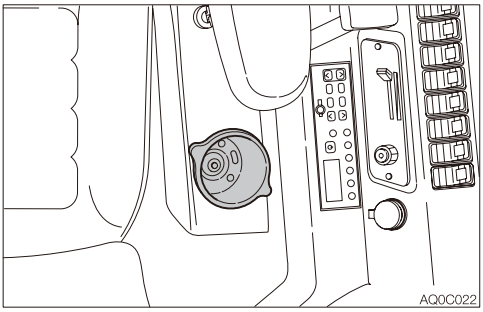

Use to hold cups or bottles.

ASHTRAY

⚠ WARNING

- Be sure to extinguish cigarettes and matches completely before putting them in the ashtray, and close the ashtray after each use.
- Do not overfill the ashtray with cigarette butts or put in paper or other easily burnable objects. Doing so could cause fire.

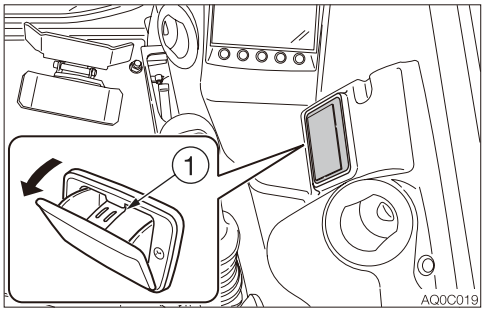

Pull the ashtray out towards you to use it. To clean, press the ash discharge button (1) and pull out the ashtray.

POWER SUPPLY SOCKET

⚠ WARNING

Use only those electric products which comply with the specifications of these sockets.

<Canopy>

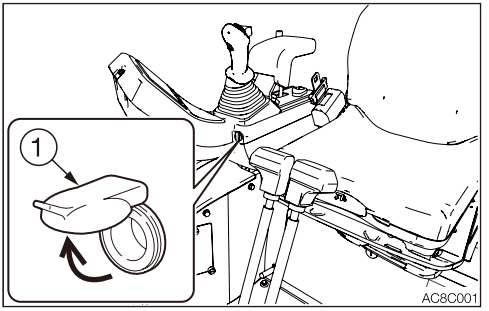

<Cab>

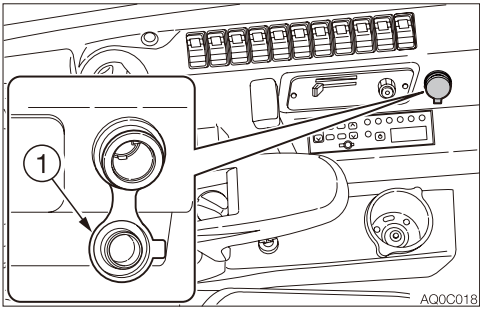

This socket is used to supply power to the interior electrical components. When using, be careful not to exceed 12V/5A.
To use, open the cap (1).

INTERIOR LIGHT

IMPORTANT: The battery capacity decreases if the interior light is left on for a long time when the engine is stopped.

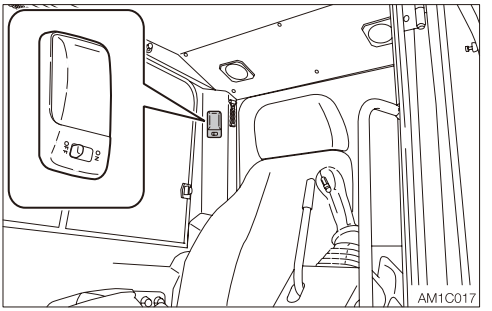

OFF ..... Remains off all the time.
Neutral position
..... Lights up for 30 seconds when the starter switch is turned to OFF from ON.
ON ..... Lights up all the time.

MIRRORS

⚠ WARNING

Adjust the mirrors before operating the machine.
If the visibility is poor, death or serious injury could result.

The mirror can be adjusted by moving it by hand. If it is too hard to move by hand or too loose, use a tool to adjust it. Set the machine to the travel posture, and then adjust the mirrors by following the instructions in this manual.

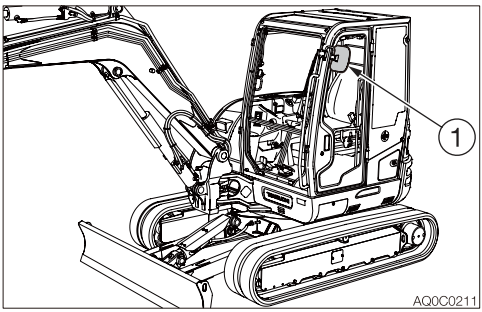

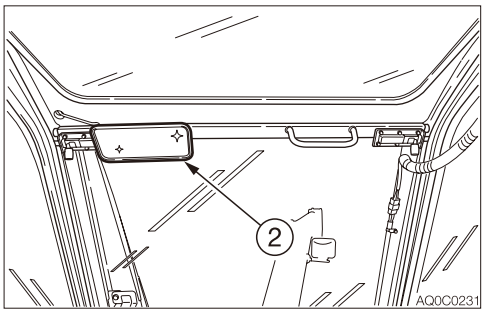

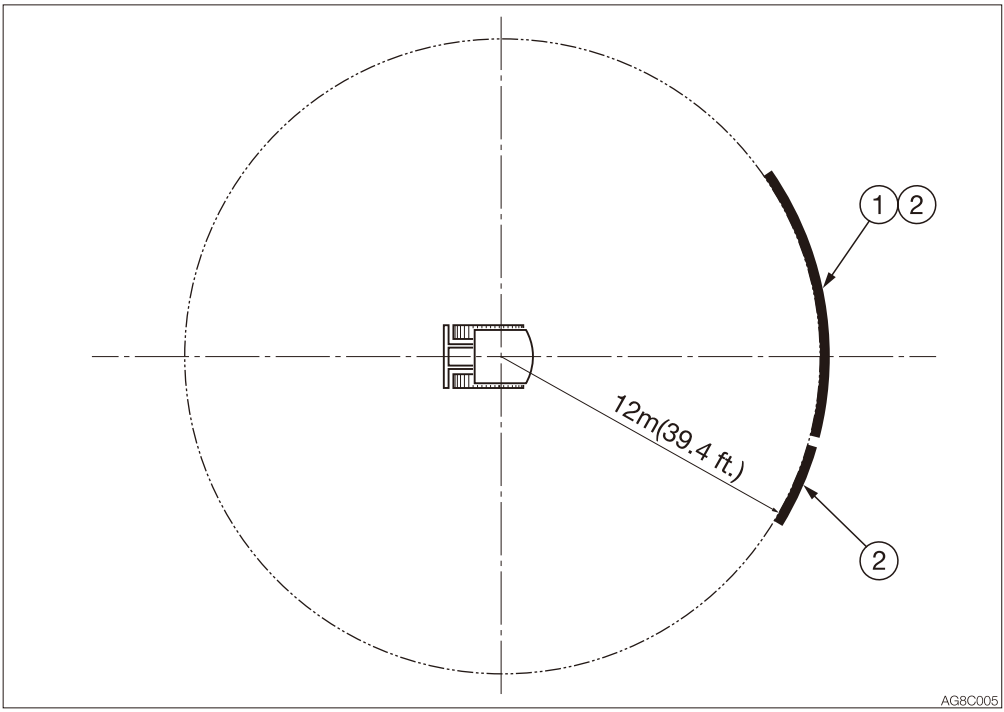

- Adjust the mirrors (1) and (2) so that you can see the rear portion obstructed by the cabin, which is on the circumference of the 12-meter radius circle centered at the operator.

EXTERNAL POWER SOCKETS

⚠ WARNING

Use only those electric products which comply with the specifications of these sockets.

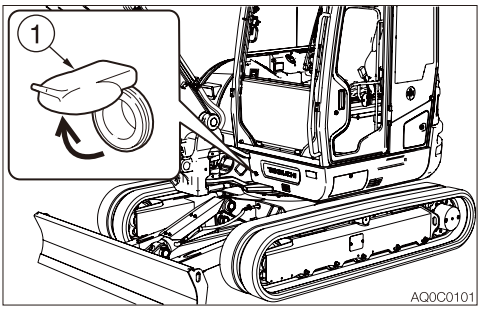

For beacon

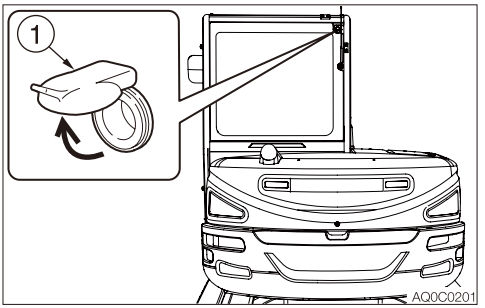

Use these sockets to connect the external power supply. When using, be careful not to exceed 12V/5A.
To use, open the cap (1).

MEMO

RADIO

CAUTIONS ON USE

- To ensure safe operation of the machine, always be sure to keep the volume of the radio down to a level where you can easily hear sounds from outside the machine.
- Do not use the radio for a long time when the engine is stopped. Doing so will drain the battery and make it difficult or impossible to restart the engine.
- Be careful not to allow water or other liquids to come into contact with the radio. Otherwise, it may result in malfunction.

NAMES OF COMPONENTS

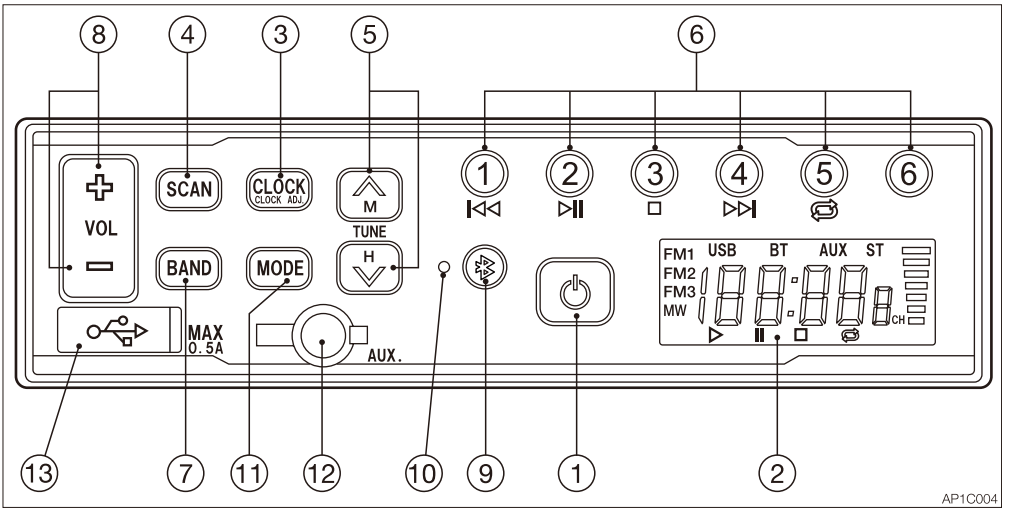

(1) POWER button
Use this button to turn on or off the radio.

(2) LCD
<Home screen>

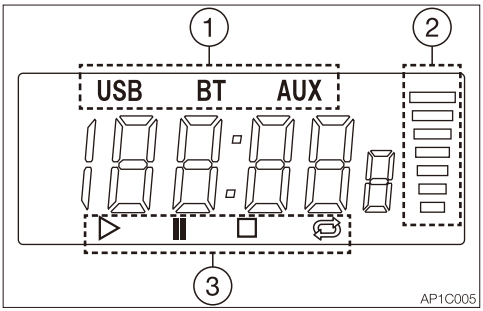

(1) Operation mode
USB: USB audio mode
BT: Bluetooth mode
AUX: Auxiliary in mode
(2) Volume level
(3) Audio control (For USB audio or Bluetooth mode only)

<Radio mode screen>

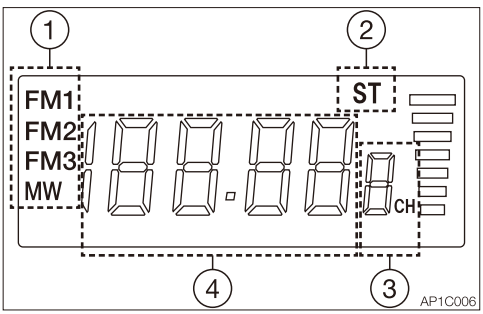

(1) Radio band display
FM1, FM2 FM3: FM band (Six stations can be preset to each band.)
MW: AM band
(2) Stereo display
Turns on when receiving stereo.
(3) Preset station
(4) Display of frequency/clock

Displays the time/the receiving frequency and the operation mode.

(3) Clock button (CLOCK)
Pressing this button changes the display to the clock. Pressing the button again displays the frequency. If the button is not pressed for three seconds, the display returns to the frequency. Pressing and holding the button enters the clock setting mode.

(4) Auto store/Auto seek station (SCAN)
Press this button to automatically assign receivable radio stations to preset buttons (1 to 6).

(5) Tuning button (TUNE ⏶ ⏷)
Press and hold this button (TUNE ⏶ or TUNE ⏷) for two seconds or more to start seeking the receivable stations. The seeking stops when a station is found. To cancel tuning halfway, press the button again.
Pressing the TUNE ⏶ button starts seeking stations with higher frequency.
Pressing the TUNE ⏷ button starts seeking stations with lower frequency.

(6) Preset buttons (1 to 6) (PRESET STATION)
Each button can store three FM stations (FM1, FM2, FM3) and one MW (AM) station.

(7) Band button (BAND)
Pressing this button changes the band from FM1 to FM2, FM3 and MW (AM), in this order.

(8) Volume control button (VOL ✚ ▭)
Press the VOL ✚ button to increase the volume and the VOL ▭ button to decrease the volume.

(9) Bluetooth button (B)
Press this button to connect to the already paired and most recently connected Bluetooth-enabled device.

(10) Bluetooth LED
Lights up when a Bluetooth-enabled device is connected. Flashes while in the pairing standby mode.

(11) Operation mode select button (MODE)
Pressing this button changes the operation mode from FM or MW (AM) to Bluetooth, USB and AUX, in this order.

(12) Auxiliary input jack (AUX)
Open the rubber cap and connect to an earphone jack of a smartphone or portable audio player with a commercially available stereo mini-plug (3.5 mm) cable. Be sure that jack is closed with the rubber cap when not in use.

(13) USB jack
Open the rubber cap and connect to a USB flash drive with a commercially available USB extension cable.
Be sure that jack is closed with the rubber cap when not in use.

Setting the clock

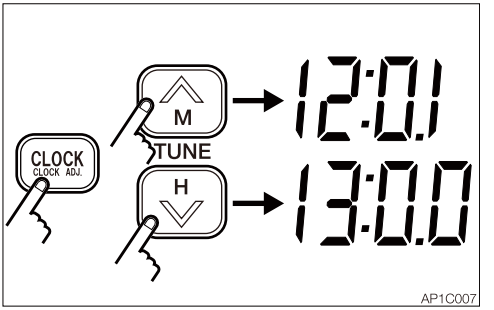

1. Press and hold the CLOCK button for at least two seconds to enter the clock setting mode. (The time display starts flashing.)
2. Use the tune ⏶M button to set the minute. Use the tune ⏷H button to set the hour.
3. Press the CLOCK button again to return to the clock display.

Playing the radio

1. Select the band, FM or MW (AM) by pressing the BAND button.
2. Select the station with the preset button or the tuning button.
3. Adjust the volume with the VOL (− or +) button.

Seeking stations (auto)

Press and hold the TUNE ⌃ button for two seconds or one to start seeking stations in the higher frequencies direction. Press and hold the TUNE ⌄ button for two seconds or more to start seeking stations in the lower frequencies direction. The radio will stop seeking when it finds a receivable station and start playing.

Manual tuning

Press the TUNE ⌃ button to increase the frequency by one step. Press the TUNE ⌄ button to decrease the frequency by one step.

Presetting stations

1. Press the BAND button to select a band (MW (AM) or FM), and then select the desired station.
2. To assign the selected station to a preset button, press and hold the button to be assigned for three seconds or more. The number of the preset button appears on the LCD to indicate that it is stored in the preset memory.
3. For more stations to preset, repeat the steps 1 and 2 above.
   - Each preset button (1 to 6) can store three FM stations (FM1, FM2, FM3) and one MW (AM) station.

Auto storing stations (SCAN)

Press the SCAN button while playing the radio. The radio automatically starts seeking the receivable stations in the band currently selected and assign each preset button (1 to 6) a station.

Note: The previous stations stored will be cleared (cancelled) by the auto storing. If the station stored in the preset button is not desirable, try to preset the station manually.

Playing back audio content stored on a USB flash drive

To enter the USB playback mode, first insert the USB flash drive while playing the radio and then press the MODE button. (The LCD changes to the time display and "USB" appears on the LCD.)

When playing back audio content stored on the USB drive, the following operations are available using the buttons (1) to (5).

(1) **Backward (⏮) button**
Moves one track backward and starts playing back from the beginning of it.

(2) **Playback/Pause (⏯) button**
Pauses playback when pressed during playback. When pressed again, starts playback from the point where the playback was paused.

(3) **Stop (⏹) button**
Stops playback when pressed during playback. When the Play/Pause button is pressed, the unit starts playing back the stopped track from the beginning.

(4) **Forward (⏭) button**
Moves one track forward and starts playing back from the beginning of it. Pressing and holding the button will fast forward the current track.

(5) **Repeat (🔁) button**
When pressed during playback, the unit repeats the current track.
To cancel repeating, press the button again.

Notes:

- When in the USB playback mode, do not insert or remove the USB drive.
- ESPERIA makes no warranty that the unit is compatible with every USB storage device.
- To connect the USB flash drive to the unit, use a commercially available USB extension cable.
- Do not connect any device other than a USB flash drive. The USB jack cannot be used to charge a device such as a smartphone.
- Please be advised that ESPERIA bears no responsibility for any damage to or loss of data on the USB drive arising from the use of the unit.

Using the Bluetooth wireless technology

You can use your Bluetooth-enabled mobile phone or audio device by connecting it to the unit.

When a mobile phone is connected, incoming calls will be announced.

Note: Since the unit is not equipped with a microphone, the unit cannot be used for phone calls.

To use the Bluetooth device, certain profiles must be able to interpreted.

The unit is compatible with the following profiles:

Incoming mobile phone call
HFP (Hands-Free Profile)

Bluetooth audio
A2DP (Advanced Audio Profile)
AVRCP (Audio Video Remote Control Profile)
Note: The Bluetooth® word mark and logos are owned by the Bluetooth SIG, Inc. and any use of such marks by ESPERIA is under license.

Pairing a Bluetooth-enabled device
When pairing the unit with a Bluetooth device for the first time, you have to pair with each other.
Once pairing is done, the unit and the paired Bluetooth device can recognize each other.

Note: Before pairing with the unit, turn on the Bluetooth feature on the Bluetooth device. Refer to the instruction manual of the Bluetooth device for further instructions.

1. Press the MODE button to switch to the Bluetooth mode.
2. Turn on the Bluetooth feature on the Bluetooth-enabled device.
3. Press and hold the Bluetooth button until two short beeps are heard, indicating the unit has entered the paring standby mode.
4. Select “CAR RADIO” on the Bluetooth-enabled device.

Note: Only one Bluetooth-enabled device can be paired and used at a time. To use a different device, follow the steps 1 to 4 for pairing again.
Note: At power-up, the unit automatically reconnects to the device most recently connected. When you leave the machine, cancel pairing by pressing and holding the Bluetooth button until two short beeps are heard, to avoid misconnection.

Playing back audio content stored on a Bluetooth-enabled device
When a Bluetooth-enabled device has been paired with the unit, check if the Bluetooth LED is lit, and then press the MODE button to enter the Bluetooth mode.
While the Bluetooth device is connected, the following operations are available using the buttons (1) to (5).

(1) Backward (⏮) button
Starts playing back from the beginning of the track currently playing. Pressing and holding the button will skip backward to the desired track.

(2) Playback/Pause (⏯) button
Pauses playback when pressed during playback. When pressed again, starts playback from the point where the playback was paused.

(3) Stop (⏹) button
Stops the currently playing audio.

(4) Forward (⏭) button
Moves one track forward and starts playing back from the beginning of it.

(5) Repeat (🔁) button
Disabled in the Bluetooth mode.

Note: If no sound is heard from the unit, check to see that the output destination of the music from the Bluetooth device is set to “CAR RADIO”.

Receiving an incoming call on the Bluetooth-enabled device
If a Bluetooth-enabled device has been connected, the unit enters the standby mode and waits for a call. When an incoming call arrives, “CALL” appears on the display, the volume of the car stereo is set to mute and the ringtone is heard from the speaker.

Auxiliary input (AUX)
- Connect a portable audio player and listen to your favorite music.
- Plug a stereo mini plug (3.5 mm) into the AUX-IN jack on the radio.
- Press the MODE button and select “AUX” to switch to the AUX mode. (The “AUX” display appears on the LCD and the frequency display is changed to the time display.)
- To return to the radio, press the MODE button again.
- When connecting, adjust the sound volume level of the audio player so that it is same as that of the radio.
- The sound volume can be adjusted with the volume control buttons on the unit.
- Do not connect a device with a larger output compared with a portable audio player.

Resetting the radio
If there is a problem such as display of incorrect frequency or failure in selecting, reset the unit by pressing the POWER button while pressing the Bluetooth button [B]. (In this case, the preset memory stations and clock are cleared.)
If you cannot reset the unit, please contact your sale or service dealer for help.

SPECIFICATIONS

Power source: .....12/24 VDC (negative ground)
Max. power consumption: .....2 A or less (at max. volume, 24 V)
Max. output power: ..16 W + 16 W (4Ω)
Rated output power: 14 W + 14 W (10% distortion, 4Ω)
Dimensions:.....178 (W) x 50 (H) x 91 (D) mm (without projections)
Receiving frequency: MW (AM) 522 to 1629 kHz
FM 76.0 to 95.0 MHz
Practical sensitivity: ..MW (AM) 20 µV (S/N 20 dB)
FM 3 µV (S/N 30 dB)
S/N ratio:.....FM 50 dB
AUX IN: .....Stereo mini jack (3.5 mm); max. input, 1 V; rated input, 90 mV
Bluetooth standard: ..Ver. 2.1 + EDR
Output:.....Class 2 (max. communication range 10 m)
Receiving frequency: 2.4 to 2.48 GHz
Supported profile:.....HFP V 1.5, A2DP V 1.2, AVRCP V 1.0
USB standard:.....USB 2.0/1.0
Supported file
• MP3: .....MPEG 1/2/2.5 .....Audio Layer 2/3
• WMA: .....Windows Media ™ Audio
Supported format: ....FAT16/FAT32 file system
Max. output power: ..0.5 A

Note: The appearance and specifications are subject to change for improvement without prior notice.

TROUBLESHOOTING

For symptoms not included in the table below or if the problem persists after the proper remedies have been taken, consult your sales or service dealer.

General

Symptoms	Major causes	Remedies
Radio does not operate or the display is inaccurate when the button is pressed.	• CPU malfunction due to noises, etc.	• Reset the unit by referring to “Resetting the radio”. Note that once reset, all settings are cleared; set the unit again.
The clock is not displayed.	• Backup power supply (orange cable) is not connected.	• Consult your sales or service dealer for help.

Radio

Symptoms	Major causes	Remedies
Sound is noisy.	• Incorrect frequency for the station	• Tune to the correct frequency for the station.
	• Antenna (pillar antenna) is not extended.	• Be sure to extend the pillar antenna when using the radio.
	• Antenna is not grounded or properly installed.	• Consult your sales or service dealer for help.
	• The antenna is not connected to the power supply	• The power supply must be connected to the antenna with a built-in booster. For details on the connection, contact your sales or service dealer.
Unrealistic frequency is displayed.	• CPU malfunction due to noises, etc.	• Reset the unit by referring to “Resetting the radio”. Note that once reset, all settings are cleared; set the unit again.

USB

Symptoms	Major causes	Remedies
No sound is heard.	• The USB flash drive has no MP3/WMA files.	• Write the MP3/WMA files correctly on the USB flash drive.
	• The files on the drive are not MP3/WMA.	• Use the MP3/WMA files properly encoded.
Sound skipping occurs. Noises are heard.	• The MP3/WMA files are not properly encoded.	• Use the MP3/WMA files properly encoded.
A USB device is not recognized.	• The USB flash drive is damaged. • The USB connector is not properly connected.	• Disconnect the USB flash drive from the unit, and then reconnect it. If the drive is still not recognized, replace it with a new one.
	• The USB flash drive is not formatted to FAT32/16.	• Format the USB flash drive to FAT32/FAT16, and then rewrite the MP3/WMA file. Be sure to back up the files on the drive before formatting it.

Bluetooth

Symptoms	Major causes	Remedies
A Bluetooth device cannot be connected.	• The Bluetooth device is not connected.	• Some Bluetooth devices require longer time for connection and cannot be reconnected automatically. Check if the Bluetooth button is lit. If it does not turn on after a while, re-pair the device by referring to “Pairing a Bluetooth-enabled device”.
	• Another Bluetooth device is connected.	• If another Bluetooth device is connected, re-pair the device by referring to “Pairing a Bluetooth-enabled device”.
A Bluetooth device cannot be remote controlled.	• The AVRCP profile is not connected.	• Remove all Bluetooth devices connected to the Bluetooth-enabled device, and then re-pair the device by referring to “Pairing a Bluetooth-enabled device”.
	• The connection link between the unit and the device may be corrupted.	• Pair the Bluetooth device again with the unit by referring to “Pairing a Bluetooth-enabled device”.
	• AVRCP is not supported	• Check the profiles supported by the Bluetooth-enabled device.

Bluetooth

Symptoms	Major causes	Remedies
No sound is heard from the Bluetooth audio.	• The volume on the Bluetooth-enabled device is too low.	• The volume of the Bluetooth audio playback is dependent on the volume level set on the Bluetooth device Set the volume on the Bluetooth device to a proper level.
	• Output destination of the Bluetooth device is not set to “CAR RADIO”.	• Check to see that the output destination of the music from the Bluetooth device is set to “CAR RADIO”.
Phone function is not available.	• The unit does not support phone calls. Some mobile phone models may connect to the unit via the “phone call” profile.	• Change the microphone setting from the unit to the mobile phone microphone by referring to the instruction manual of the mobile phone being used.
The Bluetooth audio is interrupted after receiving an incoming call.	• Some mobile phones cannot resume the Bluetooth audio after a phone call interruption.	• After the phone call, re-pair the mobile phone with the unit by referring to “Pairing a Bluetooth-enabled device”.

Regional limitation

To use a Bluetooth-equipped radio, “radio wave authentication” must be obtained in the country where the radio is to be used.
It can be used in the countries listed below, as of August 2017. To use it in other countries, please contact your service or sales dealer for assistance.

Countries where a Bluetooth-equipped radio can be used
Ireland, Italy, UK, Estonia, Austria, Holland, Cyprus, Greece, Croatia, Sweden, Spain, Slovakia, Slovenia, Czech, Denmark, Germany, Hungary, Finland, France, Bulgaria, Belgium, Poland, Portugal, Malta, Latvia, Lithuania, Rumania, Luxemburg, Iceland, Norway, Liechtenstein, Switzerland, Turkey, USA, Canada, Japan

AUXILIARY HYDRAULIC LINES (IF EQUIPPED)

There are two layouts used for the auxiliary lines.
Refer to the figure below to confirm which layout is used in the machine.

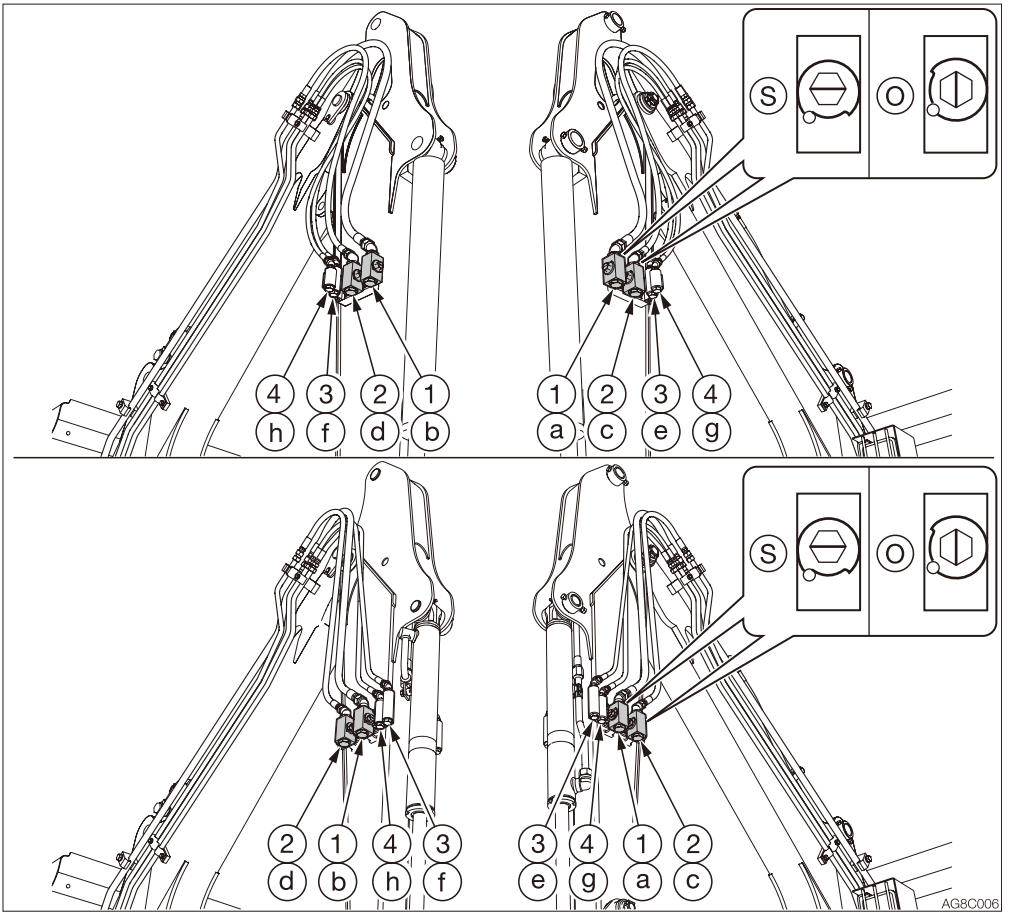

⚠ WARNING

Oil may spurt out if pipes disconnected before releasing the pressure in the hydraulic system.

- **Immediately after the engine is stopped and while the safety lock lever is still in the unlock position, turn the starter switch to ON and press each auxiliary hydraulic switch several times to release the pressure from the auxiliary hydraulic circuit.**
- **Press the air breather button to relieve the tank pressure.**
- **When disconnecting hoses, stand to the side and loosen them slowly to gradually release the internal pressure before removing.**

These lines deliver the hydraulic oil necessary for operating a hydraulic breaker, crusher or other attachments.

(1).....First auxiliary hydraulic lines
(2).....Second auxiliary hydraulic lines
(3).....Third auxiliary hydraulic lines
(4).....Fourth auxiliary hydraulic lines

Stop valve
(S) : Close
(O) : Open

Connecting the hydraulic circuits
To connect the attachment hydraulic lines, observe the following procedures:
1. Release the pressure remaining in the lines, and then close the stop valve. Refer to “Releasing the residual pressure” on page 2-92.
2. Remove the plugs.
3. Connect the attachment hydraulic lines to ports (a/c) and (b/d). When installing a hydraulic breaker, connect the supply circuit to the port (a) and the return circuit to port (b).
4. Open the stop valves. When installing a hydraulic breaker, open the selector valve (1).
   Refer to “Selector valve” on page 2-93.
5. When connecting is complete, purge air from the hydraulic lines.
   a. Start the engine and run it at a low idle speed with no load for 10 minutes.
   b. With the engine running in low idle, operate the auxiliary hydraulic switches repeatedly (approx. 10 times) to purge air from the hydraulic lines.
   c. Stop the engine and wait for at least 5 minutes until bubbles escape from the hydraulic oil in the tank.

IMPORTANT: Follow the procedures for purging air as instructed by the attachment manufacturer, if applicable.

6. Check for oil leaks.

Disconnecting the hydraulic circuits
1. Release the pressure remaining in the lines, and then close the stop valve. Refer to “Releasing the residual pressure” on page 2-92.
2. Disconnect the lines from the ports (a/c) and (b/d).
3. Install the plugs.

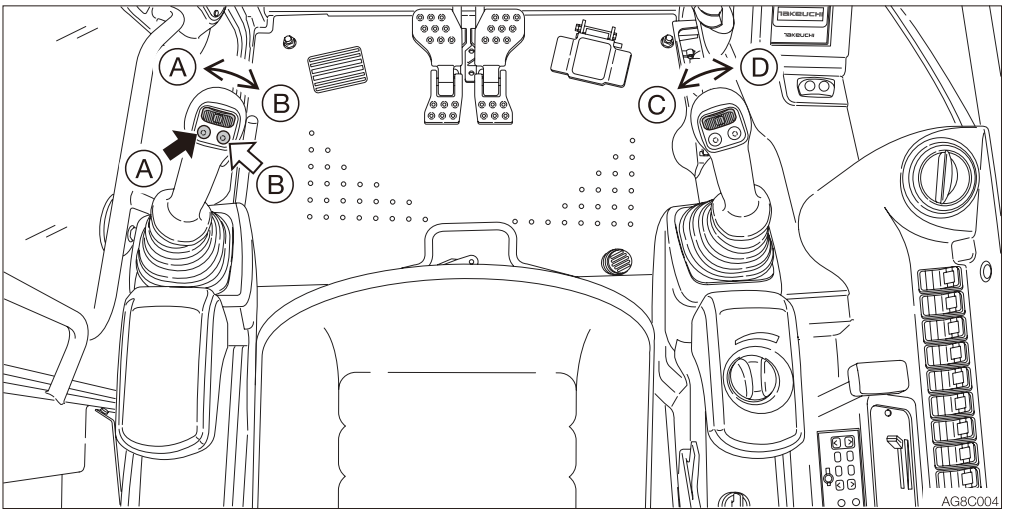

Operating

Press those buttons to control the flow of the oil in the first/second auxiliary hydraulic lines.

(A).....Hydraulic oil flows to left auxiliary line (a).

(B) .....Hydraulic oil flows to right auxiliary line (b).

(C) .....Hydraulic oil flows to left auxiliary line (c).

(D) .....Hydraulic oil flows to right auxiliary line (d).

Releasing the residual pressure

After the auxiliary hydraulic circuits have been used, pressure remains in the circuits. This is called the residual pressure. Release this residual pressure before disconnecting the lines.

Perform the residual pressure releasing within 10 minutes after the engine stopping.

1. Park the machine on a flat, rigid and safe ground.
2. Stop the engine.
3. Lower the safety lock lever to the unlocked position.
4. Turn the starter switch to the ON position.
5. Press the auxiliary hydraulic switches several times to release the residual pressure in the auxiliary hydraulic circuitry.

Selector valve

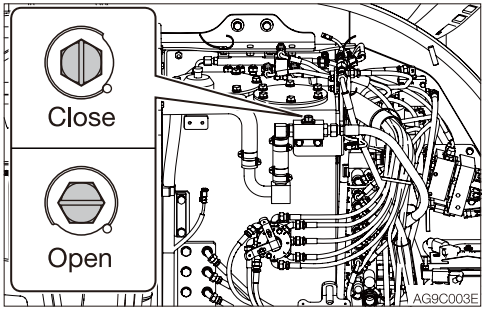

Open ..... When using a hydraulic breaker (1-way flow)
Close..... When using a reversible attachment (2-way flow)

Change the direction of the hydraulic oil flow by opening or closing the selector valve (1) inside the right side cover.

For the machine with the auxiliary 1st auto tank switch, use the switch to select the flow.

Refer to “Auxiliary 1st auto tank switch (If equipped)” on page 2-59.

Third auxiliary hydraulic switch and button (If equipped)

IMPORTANT: The specifications of the third auxiliary service differ depending on the machine used (the pipe (e) is high- or low-pressure type). Install the attachment that meets the specifications. For details on the specifications of the third auxiliary service, contact your sales or service dealer.

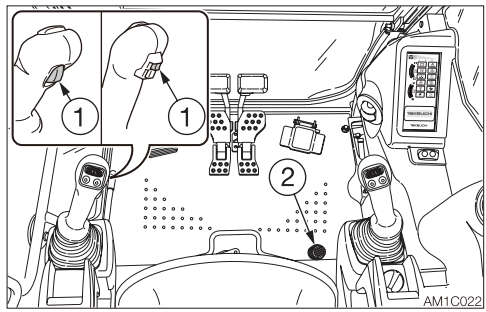

The auxiliary 3rd is mainly used for the attachment that can quickly connect/disconnect the bucket. After the engine is started, hydraulic oil constantly flows into the pipe (e). This allows the pressure in the (e) side to increase, preventing the pin inserted on the bucket from coming out. If the pressure in the (e) side drops, the warning lamp starts flashing to warn that the bucket may come out. For a safety reason, the bucket can be disconnected only when the button (1) and the switch (2) are pressed at the same time. When they are pressed, the hydraulic oil flows into the line (f) to increase the pressure there. As the result, the pin on the bucket comes out and the bucket is removed from the machine.

- **Bleeder unit for simultaneous use with the auxiliary 1st and 2nd (If equipped)**
  Pressing both the auxiliary 3rd button (1) and the switch (2) makes it possible to release internal pressure from the auxiliary 3rd (e side), auxiliary 1st and auxiliary 2nd at the same time. (The pressure is kept drawn for six seconds after the button and the switch are released.) This enables faster attachment change.

Third auxiliary hard-lock switch (If equipped)

IMPORTANT: For handling of the attachment, follow the instructions provided in the attachment manual.

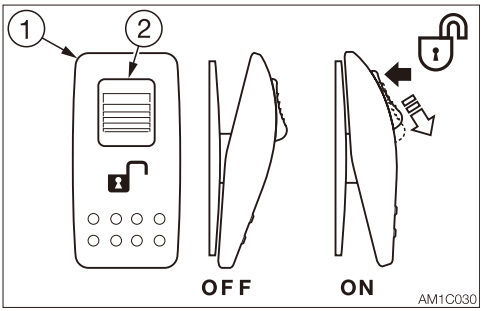

The third auxiliary hard-lock switch should be installed in the third auxiliary if the attachment to be installed on the piping of the third auxiliary is capable of hard locking.
When operating the third auxiliary, this switch is used.
The third auxiliary is mainly used to control the “quick attachment” that connects/ disconnects the bucket.
After the engine is started, hydraulic oil flows into the pipe (e) if the switch is off. This allows the pressure in the (e) side to increase, preventing the pin inserted into the bucket from coming off.
When the switch is turned on by pressing the switch (1) while pulling the orange portion (2), the warning lamp starts flashing. The hydraulic oil flows into the line (f) to increase the pressure there. As a result, the pin on the bucket comes off and the bucket is removed from the machine.

Third auxiliary hydraulic warning lamp

<Canopy>

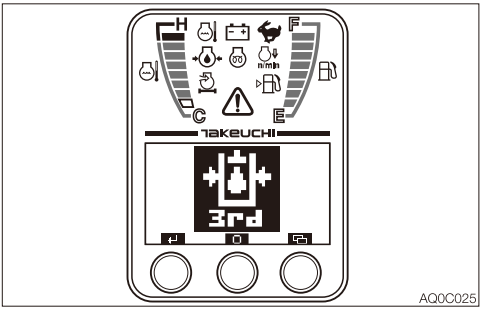

<Cab>

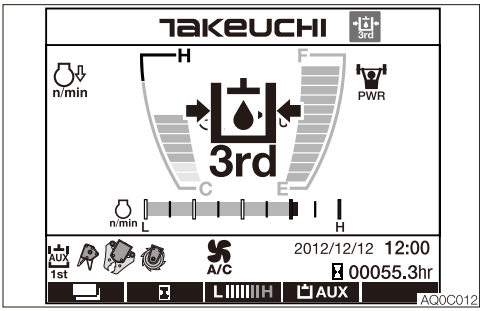

This lamp illuminates and an alarm sounds when the third auxiliary hydraulic pressure drops abnormally, when the safety lock lever is fully lowered to the unlocked position while the engine is running.
For the machine with the hard lock feature, the lamp lights up and an alarm is sounded only when the third auxiliary hard-lock switch is turned on.

Auxiliary 2/4 select button (If equipped)

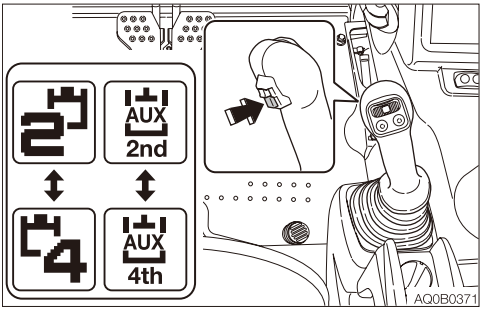

This button is used to change from the second auxiliary operation to the fourth auxiliary operation.
Pressing this button displays the second auxiliary on the LCD to indicate that the second auxiliary operation is enabled.
Pressing this button again displays the auxiliary 4th on the LCD to indicate that the auxiliary 4th operation is enabled.
The actual operation is performed with the auxiliary 2nd/4th switch (slider switch).
Refer to “Auxiliary 2nd/4th switch (If equipped)” on page 2-54.

Setting the flow rate
The flow rate in the auxiliary 1st, 2nd and 4th can be set to the desired values.
For details, refer to “Auxiliary 1st flow rate setting” on page 2-24, “Auxiliary 2nd/4th flow rate setting” on page 2-25, “Auxiliary 1st flow rate setting (1st AUX SET)” on page 2-43, “Auxiliary 2nd flow rate setting (2nd AUX SET)” on page 2-44 and “Auxiliary 4th flow rate setting (4th AUX SET)” on page 2-44.
IMPORTANT: The set values are not the guaranteed values. They should be used as rough guides.

OPERATING THE MACHINE WITH AN ACCUMULATOR (IF EQUIPPED)

⚠ WARNING

Be sure to handle the high-pressure nitrogen gas enclosed in the accumulator with care. If handled incorrectly, it could explode and cause serious injury. Strictly observe the following precautions:

- **Do not disassemble.**
- **Do not allow flame near or throw it into a fire.**
- **Do not drill, weld or fuse.**
- **Do not subject it to physical shock such as hitting, rolling or dropping.**
- **Before disposing of the unit, the sealed gas must be drained. Contact a Takeuchi service agent for help.**

For a machine with an accumulator, the residual pressure in the auxiliary hydraulic circuit or the working equipment circuit can be released even after the engine is stopped.

Releasing residual pressure

Residual pressure refers to the pressure that remains in the hydraulic circuit after the operation. Release the residual pressure as necessary by using the following steps. Perform the residual pressure releasing within 10 minutes after the engine stopping.

1. Return the throttle controller to idle the engine at low speed.
2. Lower the bucket and dozer blade to the ground.
3. Check that the safety lock lever is in the released position.
4. Stop the engine.
5. Turn the starter switch to the ON position.

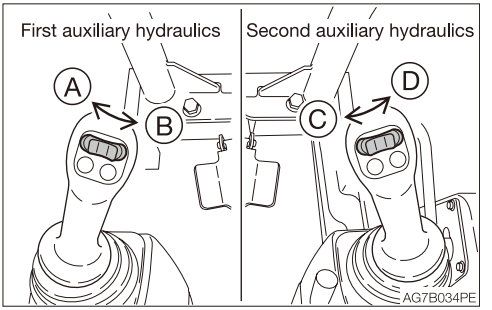

6. Move or press the auxiliary hydraulic switches several times to release the residual pressure in the circuitry.
7. Move all the control levers and pedals several times in all directions to release the pressure from the working equipment circuitry.
8. Raise the safety lock lever to engage the lock.

Lowering the boom when the engine has stopped

Perform this operation within 10 minutes after the engine stopping.

1. Sit at the operator's seat.
2. Turn the starter switch to the ON position.
3. Lower the safety lock lever to the unlock position
4. Slowly push the operating lever forward to lower the boom.

LIFTING SAFETY DEVICE (IF EQUIPPED)

The lifting safety devices include an emergency shut-off valve and an overload warning device.

Emergency shut-off valve

⚠ WARNING

- **If the boom or arm stops due to the breakage of hose, immediately move away from the load being lifted and go to a safe location.**
- **If the emergency shut-off valve hose breaks, immediately stop operation.**
- **Since the emergency shut-off valve (1) is a safety device, you must not disassemble it and/or replace or adjust its internal part. Takeuchi shall not be held responsible for any injuries, accidents or product malfunction caused by disassembly.**

The emergency shut-off valve (1) prevents the boom or arm from falling rapidly in case the hydraulic hose is broken.

Boom

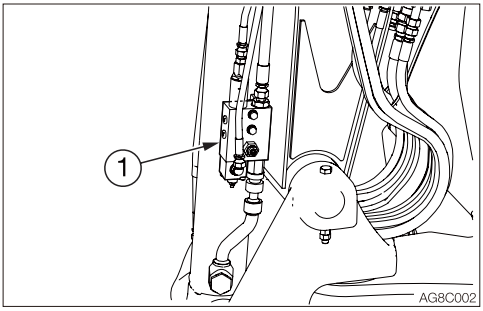

Arm (option)

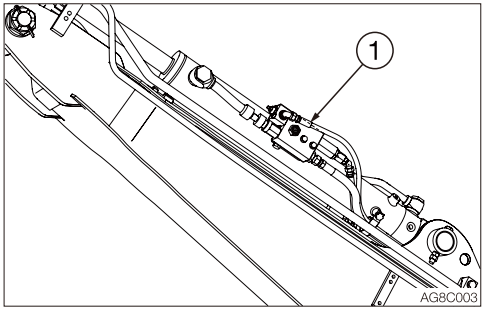

If the hose breaks and the emergency shut-off valve (1) is activated to stop the operation of boom or arm, lower the boom or arm by slowly operating the lever while ensuring safety. Ask your sales or service dealer for repair.

Overload warning device

⚠ WARNING

If the overload is not removed after the overload warning horn is sounded, the machine may tip over. If the horn starts sounding, stop operating the machine and lighten the load.

If a weight greater than the lifting capacity is applied or lifted, the overload warning device is activated and the horn sounds. (When the lift overload warning switch is turned on.)

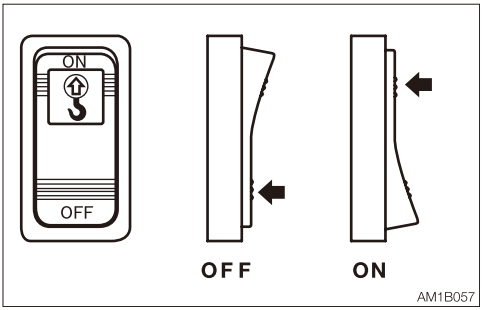

Lift overload warning switch
OFF ....Off
ON .....On

FUEL SUPPLY PUMP (IF EQUIPPED)

⚠ DANGER

Do not use the fuel supply pump for gasoline or hydraulic oil. Doing so could result in explosion or damage.
Only use the fuel supply pump for diesel fuel.

⚠ WARNING

- **Do not keep the right side cover open on a windy day or if the machine is parked on a slope.**
- **When opening and closing the right side cover, be careful not to get your hands or other parts of your body caught by the cover.**

⚠ CAUTION

Do not fill the tank with additional fuel after the fuel supply pump stops. Doing so could cause the fuel to spurt out.

This device automatically supplies fuel to the fuel tank and stops automatically when the fuel tank is full.

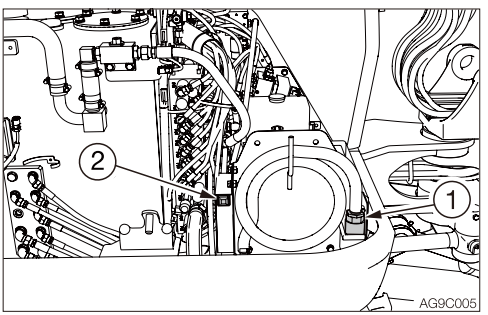

1. Open the right side cover.
2. Insert the pump's nozzle (1) in the fuel supply tank.
3. Press the switch (2).
   The pump stops automatically once the fuel tank is full.

Note: To stop filling at a desired level, press the switch (2).

4. Store the nozzle.

ENGINE AUTO STOP

⚠ WARNING

Do not leave the machine when the attachment is raised.

The term “engine auto stop” refers to a function that automatically stops the engine. When the engine auto stop function is on, the machine engine automatically stops to reduce fuel consumption, under the conditions listed below.
When the following conditions are met, the buzzer sounds and the engine stops in three minutes.
1. Safety lock lever is raised
2. Vehicle error code is not generated.
3. Engine error code is not generated.

For details about turning on or off this function, ask your sales or service dealer for help.

IMPORTANT: If the certain conditions are met when the engine auto stop is on, the buzzer sounds once every minute. The buzzer continues to sound once every minute even after the engine stops. Leaving the starter switch at the ON position will deplete the battery. Be sure to turn the switch to the OFF position after the engine is stopped.

Note:
- The engine auto stop does not function during the DPF auto regeneration.
- When the engine is stopped due to the auto stop function, the engine will not start again unless the starter key is turned to the OFF position.
- If the safety lock lever is raised to the lock position when the engine auto stop is on, the engine speed will be changed to Low Idle; control of the engine RPM will be disabled. To enable the engine RPM control, lower the safety lock lever to the unlock position.

LANGUAGE SETTING

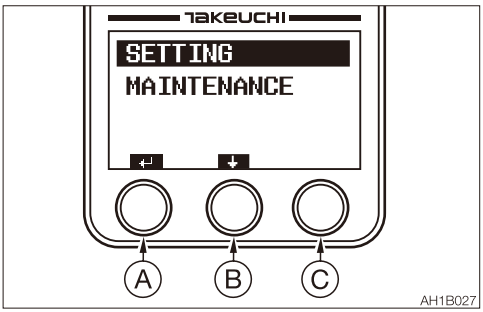

To display the side menu, turn the starter switch from the OFF to the ON position while pressing the key (C).
Press the key (A) to proceed to the screen selected by the bar.
Press the key (B) to move the selection bar.
Move to the setting selection screen (SETTING).

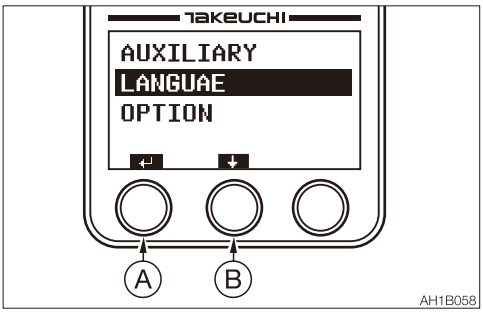

Press the key (B) to move the selection bar.
Select “LANGUAGE” and then press the key (A) to go to the language selection screen.

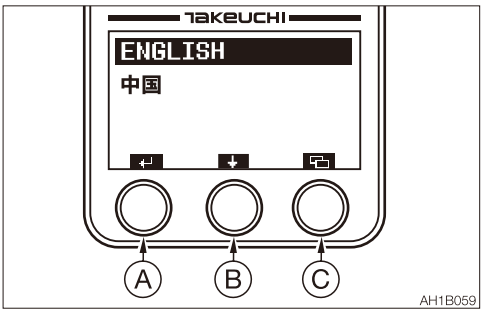

Press the key (A) to set to the language being selected
Press the key (B) to move the selection bar.
Press the key (C) to return to the language setting screen.

OPERATION



BEFORE STARTING OPERATION

GETTING ON OR OFF THE MACHINE

⚠ WARNING

- **Do not jump on or down from the machine. Never attempt to get on or off the moving machine.**
- **When getting on or off the cab, first fully open the door to the locked position and check that it does not move.**

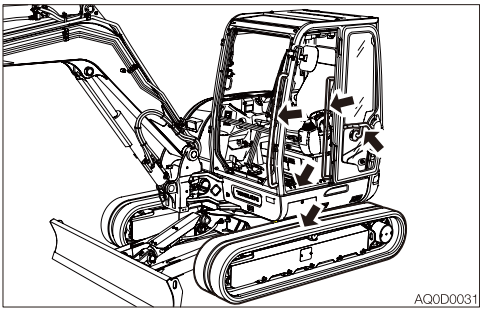
AQ0D0031

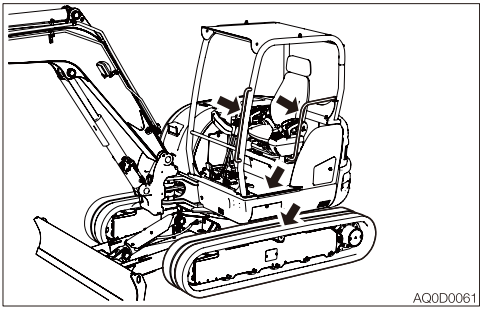
AQ0D0061

- **Climb up/down the steps holding the handrail to support your weight in a three point secure stance (hand and feet).**
- **Never use the safety lock lever or control levers as hand holds.**

WALK-AROUND INSPECTION

Perform the walk-around inspections once a day before starting the engine for the first time that day.
Refer to “MAINTENANCE, Walk-around inspection”, on pages 5-16 and 5-17.

DAILY INSPECTION

Perform the daily inspections once a day before starting the engine for the first time.
Refer to “MAINTENANCE, Daily inspection”, on pages 5-18 to 5-23.

STARTING AND STOPPING THE ENGINE

BEFORE STARTING THE ENGINE

1. Adjust the seat for a comfortable operating position.
2. Fasten the seat belt.

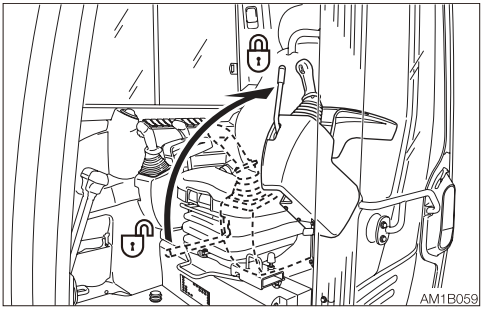

3. Check that the safety lock lever is in the locked position.

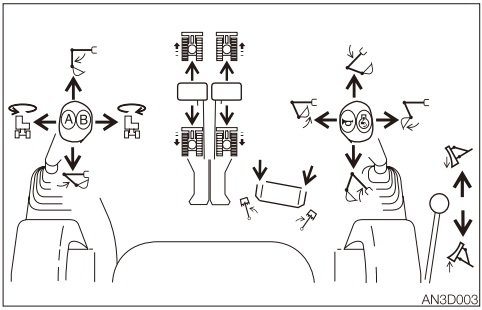

4. Check that all levers and pedals are in the neutral position.

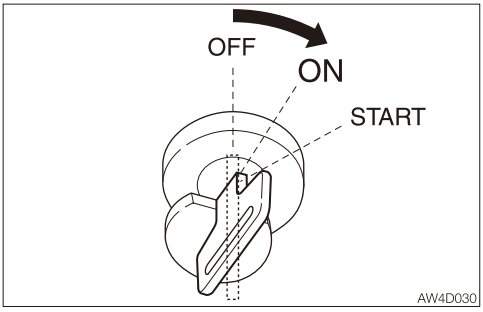

5. Insert the key into the starter switch, turn it to the ON position, then perform the following inspections:

<Canopy>

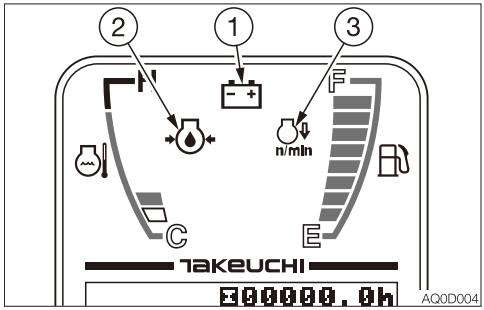

<Cab>

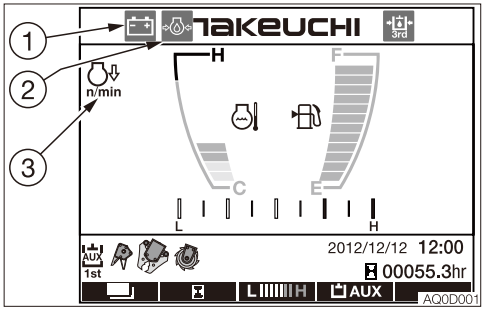

- All warning lamps flash and an alarm is sounded for two seconds. The meters also start functioning. After two seconds, the deceleration lamp (3) stops flashing and remains lit, while the battery charge warning lamp (1) and engine oil pressure warning lamp (2) remain flashing. (If the auxiliary 3rd is selected, it is also flashing.) The other lamps go out.
- Turn on the light switch to check that the boom light, front light and tail lamps turn on.
- Check the fuel level.

If a lamp does not light or the alarm is not sounded, the display or a wire may be damaged. Ask your sales or service dealer for repair.

STARTING THE ENGINE

⚠ WARNING

- **Clear all personnel from the work area.**
- **Sound the horn to warn people around the machine.**

IMPORTANT: Do not run the starter motor for more than 15 consecutive seconds. If the engine fails to start, wait for 30 seconds, and then try again to start the engine.
IMPORTANT: If the engine stalls due to fuel shortage, add fuel, turn the key to the ON position for 60 seconds, and then turn it to the START position. Running the starter for a long time before there is enough fuel is going through can cause the starter to fail.

Normal starting

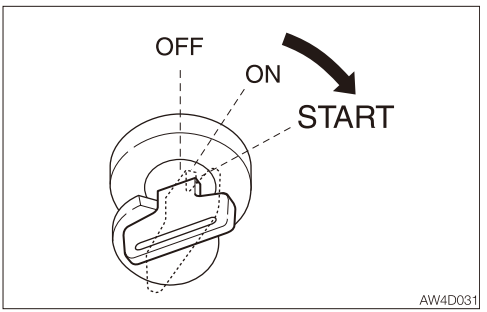

1. Turn the starter key to the START position and start the engine.
   The engine does not start unless the safety lock lever is in the locked position at this point.
   Refer to “Safety lock lever” on page 2-61.
2. Once the engine starts, release the key. The key automatically returns to the ON position.
3. Check that the warning lamps are off.
   For safety reasons, it is designed that the deceleration function is activated to set the engine revolutions to low idling whenever the engine is started.
   Cancel the deceleration mode by pressing the deceleration button as necessary.
4. Warm up the engine.
   Refer to “Warming up the engine” on page 3-5.
5. After the completion of the warming up, press the deceleration button to cancel the deceleration mode.

Starting in cold climates

⚠ WARNING

Never use starting fluid on this engine, as the starting fluid could cause an explosion.

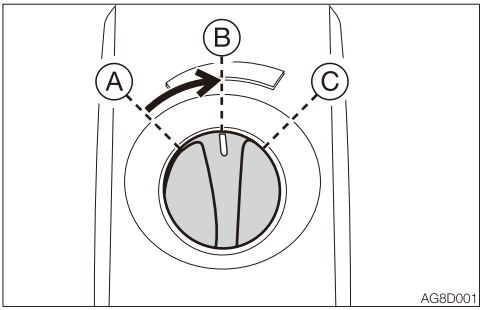

1. Turn the throttle controller to the middle position.

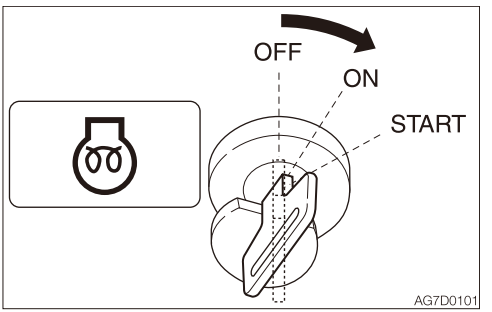

2. Turn the starter key to the ON position, and confirm that the glow lamp is on. (The glow lamp stays lit for 15 seconds when the coolant temperature is –10°C (14°F).)
3. After the glow lamp goes out, press the deceleration button (to cancel the deceleration mode), and then turn the key to the START position to start the engine.
   The engine does not start unless the safety lock lever is in the locked position at this point.

Refer to “Safety lock lever” on page 2-61.
4. Once the engine starts, release the key. The key automatically returns to the ON position.
5. Check that the warning lamps are off.
6. Return the throttle controller to the original position and warm up the engine. Refer to “Warming up the engine” on page 3-5.

WARMING UP THE ENGINE

IMPORTANT: Do not accelerate the engine and run it without load until the engine warm up is complete.
Do not warm up the engine for a long time (20 minutes or more). When idling is required, occasionally place a load or run the engine at medium speed.

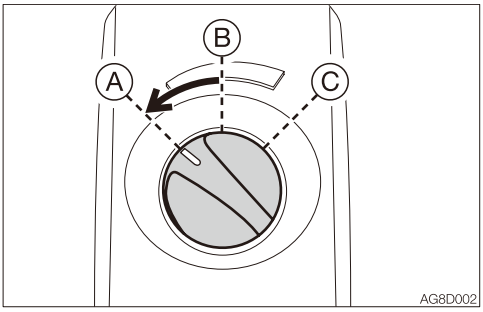

1. Return the throttle controller, and then run at a low idle with no load for 5 minutes.

STOPPING THE ENGINE

IMPORTANT: Do not stop the engine suddenly when operating with heavy loads or at the maximum speed. Doing so may cause the engine to overheat or seize. Never stop running the engine suddenly except in emergency.

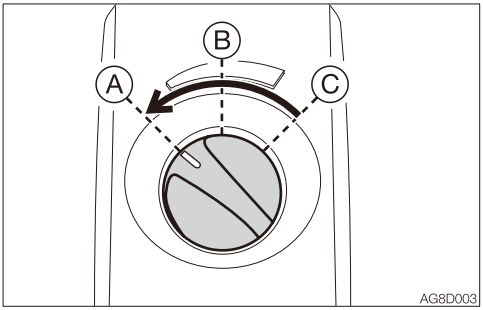

1. Return the throttle controller.
2. Idle the engine for about 5 minutes to gradually let it cool.

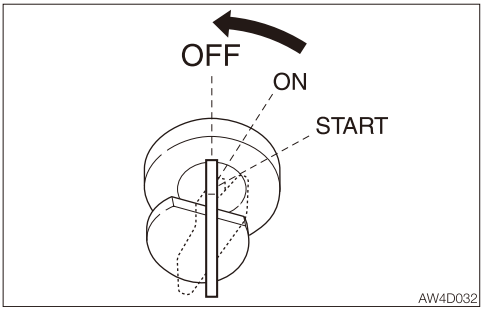

3. Turn the starter key to the OFF position to stop the engine.

OPERATING THE MACHINE

LEVER PATTERN (ISO PATTERN)

⚠ WARNING

- Before starting operation, carefully check which lever pattern you are going to use.
- It is described using the ISO pattern in this manual.

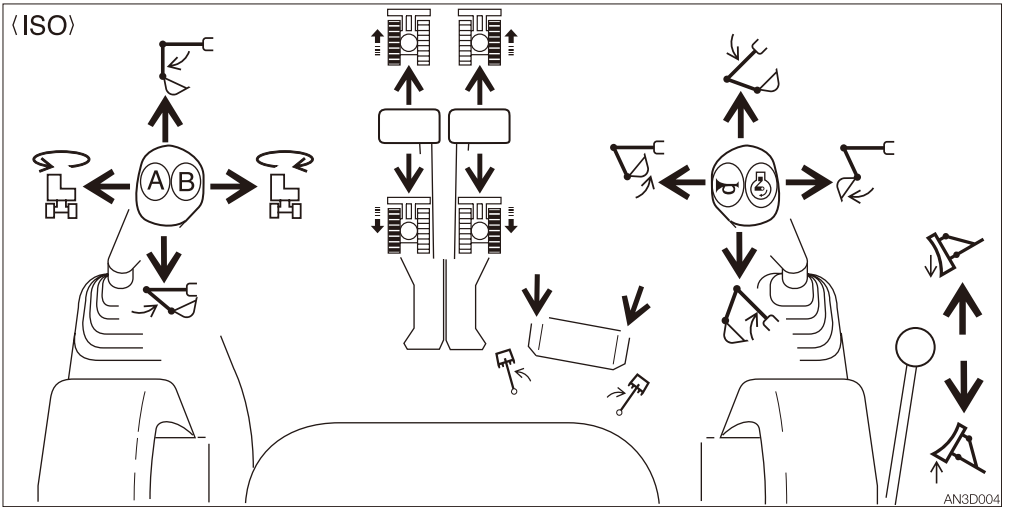

	Left crawler forward		Right crawler forward
	Left crawler reverse		Right crawler reverse
	Arm out		Boom lower
	Arm in		Boom raise
	Upperstructure slew left		Bucket load
	Upperstructure slew right		Bucket dump
	Boom swing left		Dozer blade lower
	Boom swing right		Dozer blade raise

LEVER PATTERN (G PATTERN) (IF EQUIPPED)

⚠ WARNING

- **Before starting operation, carefully check which lever pattern you are going to use.**
- **It is described using the ISO pattern in this manual.**

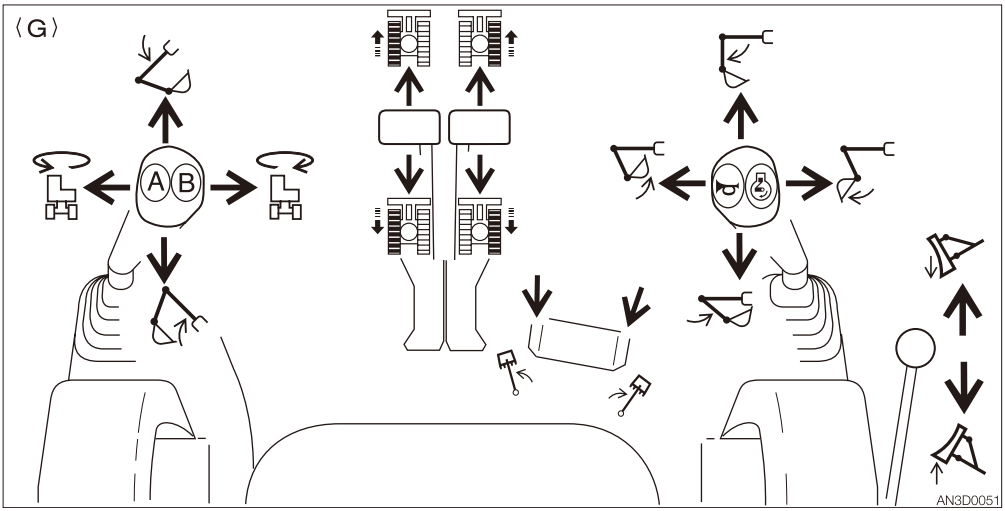

	Left crawler forward		Right crawler forward
	Left crawler reverse		Right crawler reverse
	Boom lower		Arm out
	Boom raise		Arm in
	Upperstructure slew left		Bucket load
	Upperstructure slew right		Bucket dump
	Boom swing left		Dozer blade lower
	Boom swing right		Dozer blade raise

Refer to “Selecting a lever pattern” on page 8-5.

WARMING UP THE MACHINE (HYDRAULIC OIL)

⚠ WARNING

Operating the working equipment without warming up the machine (hydraulic oil) is dangerous, as the working equipment cannot response to controls quickly or may move in unexpected ways, and the safety devices may not operate properly. Be sure to sufficiently warm up the machine.

IMPORTANT: Do not operate the levers too quickly when the hydraulic oil temperature is below 20°C (68°F). The proper hydraulic oil temperature during operation is 50 to 80°C (122 to 176°F). If operations must be performed at lower temperatures, heat up the hydraulic oil to at least 20°C (68°F).

Normal warm-up

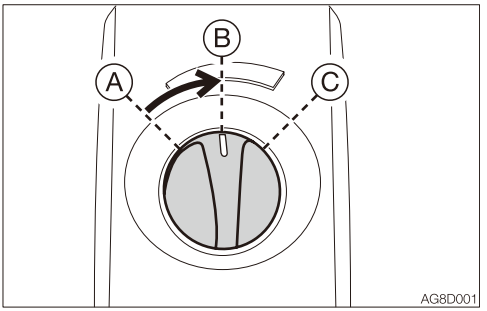

1. Turn the throttle controller to the middle position, and then run the engine at medium speed for about five minutes with no load.

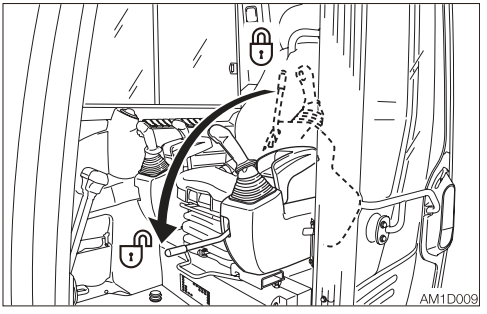

2. Fully lower the safety lock lever to disengage the lock and lift the bucket from the ground.

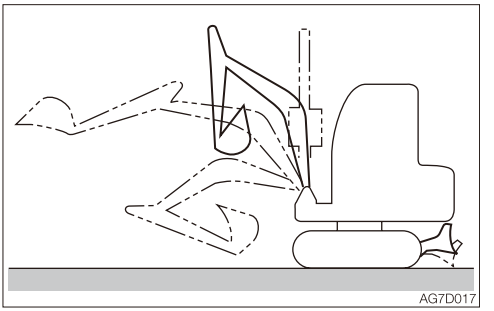

3. Extend and retract each of the cylinders slowly several times with no load.

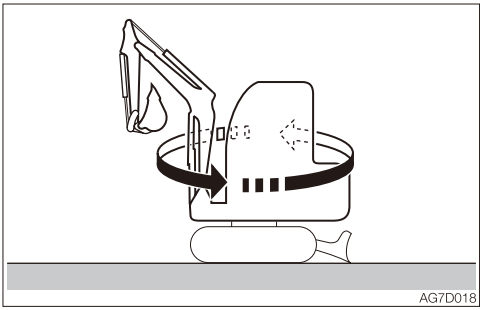

4. Slew slowly to the left and the right several times.

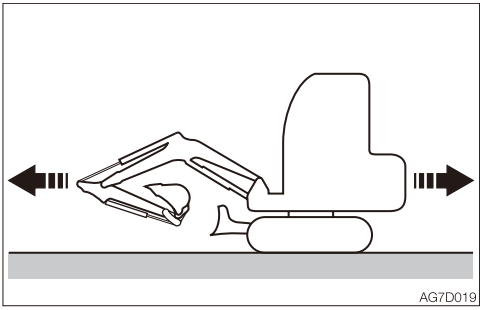

5. Travel slowly forward and in reverse several times.

Warm-up in cold climates

1. Perform the normal warm-up procedure.

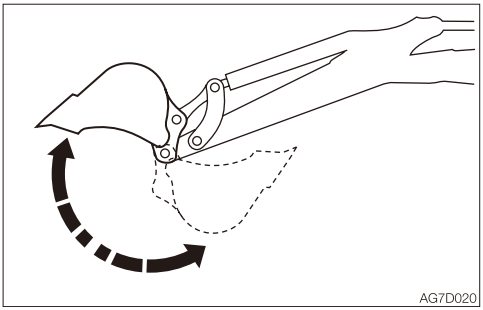

2. Set the bucket cylinder at the stroke end and keep it there.
   Do not keep this condition for more than 30 seconds.
3. Repeat Step 2 until the bucket operating speed becomes normal.

INSPECTION AFTER WARM-UP

After warming up the engine and machine (hydraulic oil), perform the checks and inspections described below, and repair if necessary.

<Canopy>

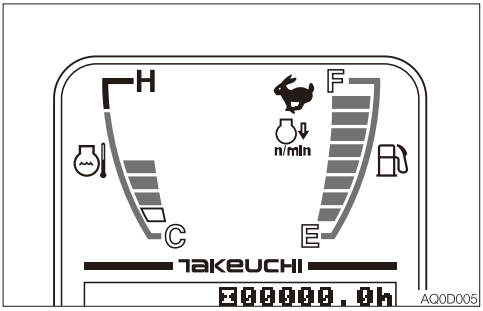

<Cab>

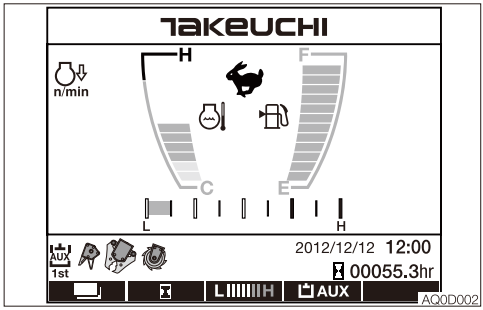

1. Check that the warning lamps and meters are as follows:
   · Are all warning lamps off?
   · Is the water temperature level within the green range?
2. Check that there are no irregularities in the exhaust color, sound and vibrations.

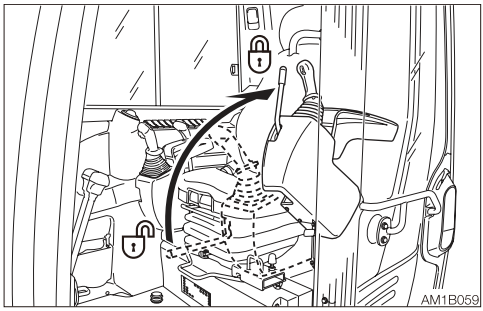

3. Raise the safety lock lever to the locked position, and then check that the operating and travel levers are locked.

OPERATING THE TRAVEL LEVERS/ PEDALS

⚠ WARNING

- Never allow anyone to enter the machine's slewing radius and path.
- Signal your intention to move by sounding the horn.
- There is a blind spot in the rear of the machine. Before traveling in reverse, as necessary, swing the cab around in reverse to check that the area is safe and clear.

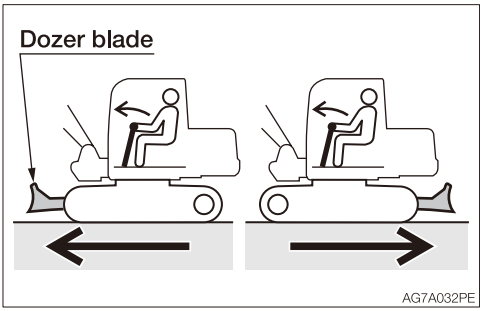

- Before operating the travel levers/ pedals, make sure that the dozer blade is to the front of the operator's seat. Remember that when the dozer blade is to the rear of the operator's seat, the travel levers/pedals must be operated in the reverse direction from when it is to the front.
- Clear all obstacles from the path of the machine.

Moving the machine forward and backward

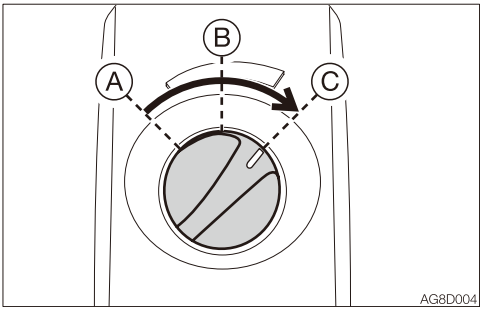

1. Turn the throttle controller and increase the engine speed.

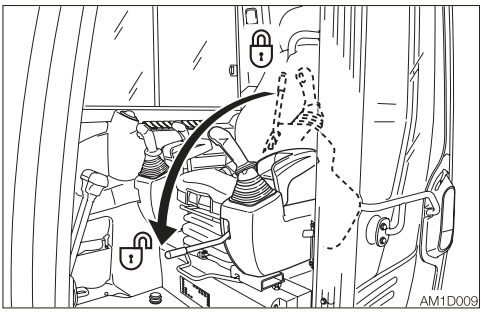

2. Fully lower the safety lock lever to disengage the lock.

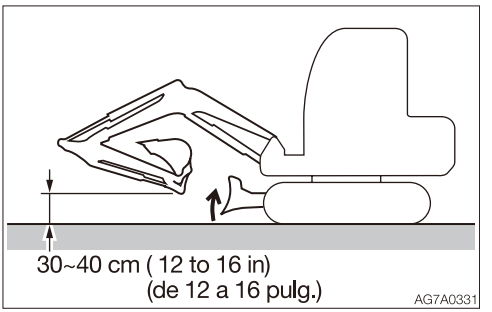

3. Fold the hoe attachment and lower it 30 to 40 cm (12 to 16 in.) above the ground.
4. Lift the dozer blade.
5. Operate the left and right travel levers as below.

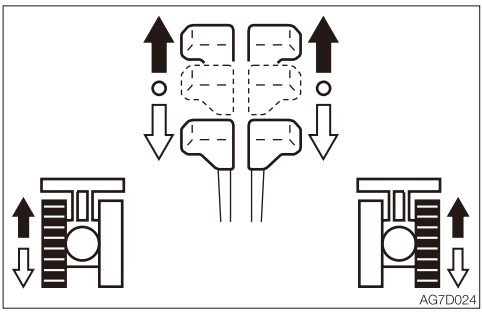

When the dozer blade is in front of the operator's seat:

➡ To move forward:
Tilt the levers forward.

⇨ To move backward:
Tilt the levers backward.

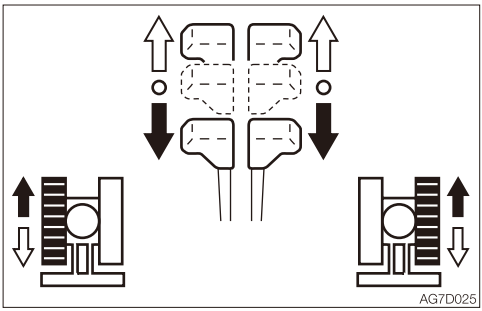

When the dozer blade is behind the operator's seat:

➡ To move forward:
Tilt the levers backward.

⇨ To move backward:
Tilt the levers forward.

Traveling in 2nd (High) speed

⚠ WARNING

When a load greater than a set value is applied during traveling in 2nd (high) speed, the speed will automatically slow down to 1st (low) speed. When the load becomes lighter, the speed will increase and return to 2nd (high) speed. It should be noted that the travel speed changes depending on the load condition (for machines with the automatic travel shift-down system).

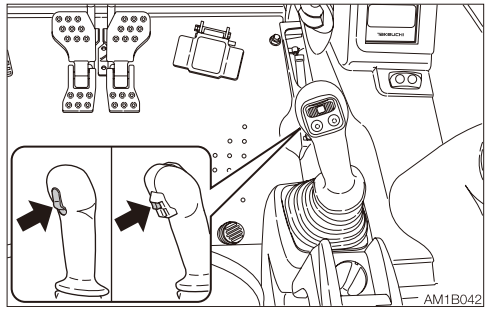

Press the travel speed switch to set to the 2nd (high) speed, and press it again to return to the 1st (low) speed.

Pivot turn

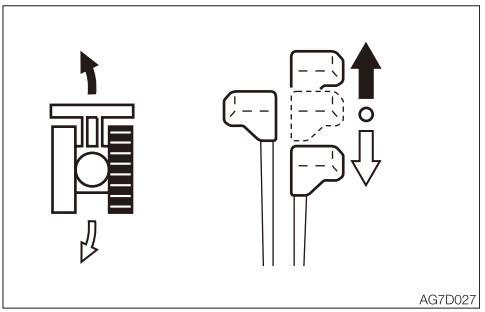

Turning to the left when stopped:

➡ To turn forward to the left:
Tilt the right lever forward.

⇨ To turn backward to the left:
Tilt the right lever backward.

To turn to the right, operate the left lever in the same way as for the right lever.

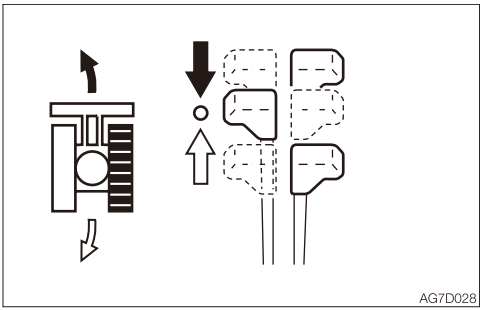

Turning to the left while traveling:

➡ To turn left while traveling forward:
Set the left lever to neutral.

⇨ To turn left while traveling backward:
Set the left lever to neutral.

To turn to the right while traveling, operate the right lever in the same way as for the left lever.

Spin turn

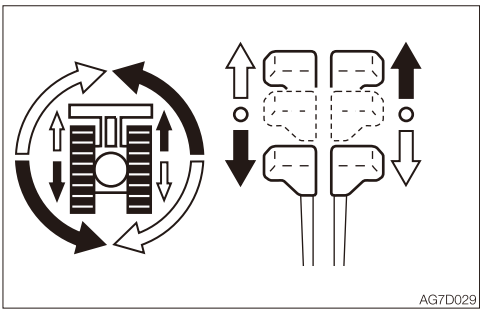

➡ To spin left:
Tilt the left lever backward and the right lever forward.

⇨ To spin right:
Tilt the right lever backward and the left lever forward.

STOPPING TRAVEL

⚠ WARNING

- Park the machine on a flat, rigid and safe ground. Set the parking brake. If you must park on a slope, chock the tracks to block the machine.
- If any control is accidentally touched when the safety lock lever is not locked, the machine may suddenly move and cause serious injury or death.

⚠ CAUTION

Never stop running the machine suddenly except in emergency. Stop in good time, if possible.

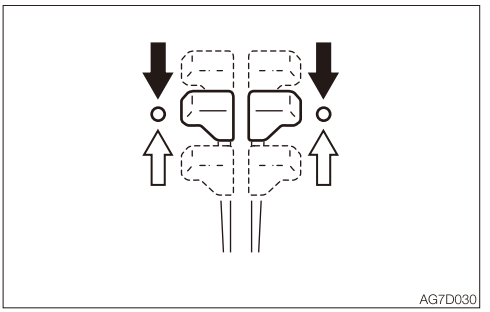

1. Set the left and right travel levers slowly to the neutral position. The machine stops.

OPERATING THE WORKING EQUIPMENT

⚠ WARNING

- **Before starting operation, carefully check which lever pattern you are going to use.**
- **It is described using the ISO pattern in this manual.**

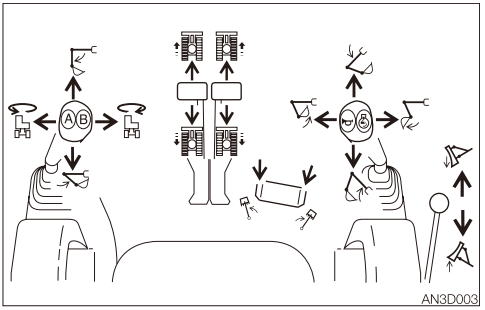

Use the right operating lever to operate the boom and bucket.
Use the left operating lever to operate the arm and slewing.
Return the operating levers to the neutral position to stop the hoe attachments.

1. Lower the safety lock lever to the unlocked position.
2. Set the pedal cover to the unlocked position.

Slewing

⚠ WARNING

Check the surrounding area for safety before slewing.

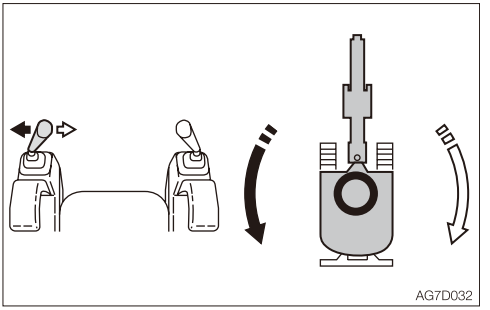

➡ Upperstructure slew left:
Tilt the left operating lever to the left.
⇨ Upperstructure slew right:
Tilt the left operating lever to the right.

Operating the boom

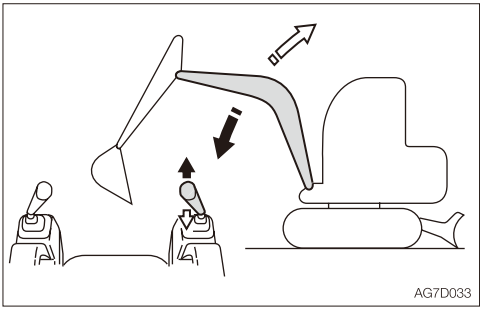

➡ Boom lower:
Tilt the right operating lever forward.
⇨ Boom raise:
Tilt the right operating lever backward.

Operating the arm

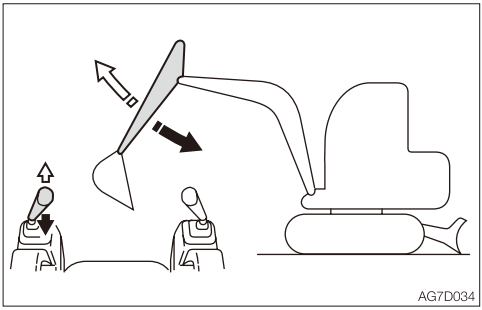

➡ Arm in:
Tilt the left operating lever backward.

⇨ Arm out:
Tilt the left operating lever forward.

Operating the boom swing

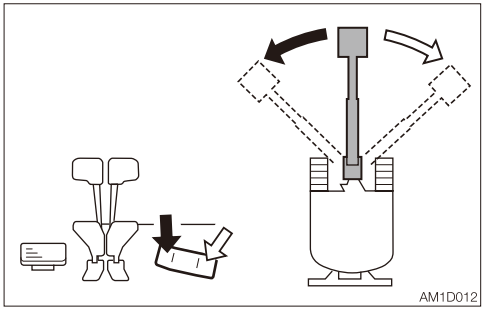

➡ Boom swing left:
Step on the left side of the pedal.

⇨ Boom swing right:
Step on the right side of the pedal.

Operating the bucket

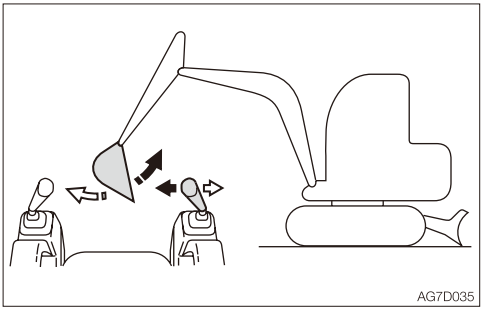

➡ Bucket load:
Tilt the right operating lever to the left.

⇨ Bucket dump:
Tilt the right operating lever to the right.

Operating the dozer blade

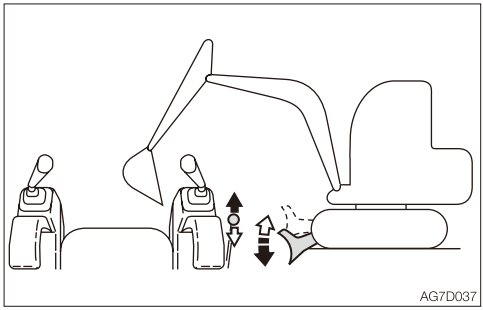

➡ Dozer blade lower:
Tilt the lever forward.

⇨ Dozer blade raise:
Tilt the lever backward.

OPERATING PROCEDURES

PROHIBITED OPERATIONS

⚠ WARNING

- **Do not operate on bedrock (hard or soft).**
- **Do not slew /swing while traveling. If you must operate the hoe attachment while traveling, operate at speeds slow enough so you have complete control at all times.**

Do not perform demolition or leveling using slew force

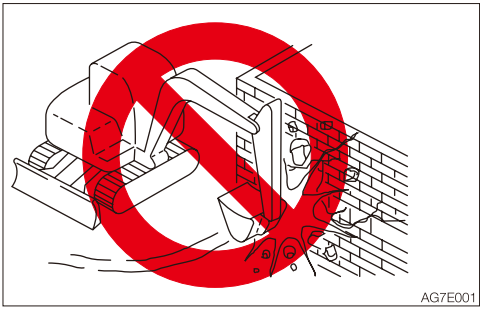

Do not demolish walls or level ground using slew force. Also, do not dig the bucket teeth into the ground during slewing. Doing so will damage the hoe attachment.

Do not dig while traveling

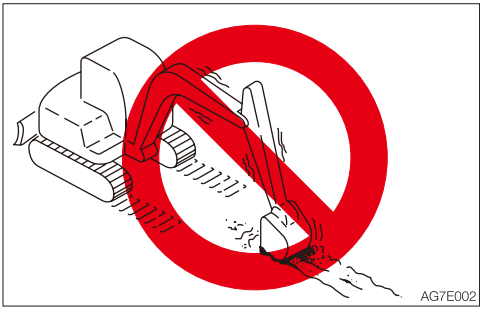

Do not dig the bucket into the ground and use the traveling force to dig.

Be gentle when using the hydraulic cylinder

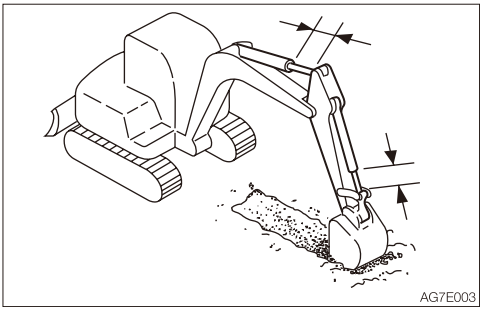

Do not extend the hydraulic cylinders to the stroke ends. Operate them with leeway.

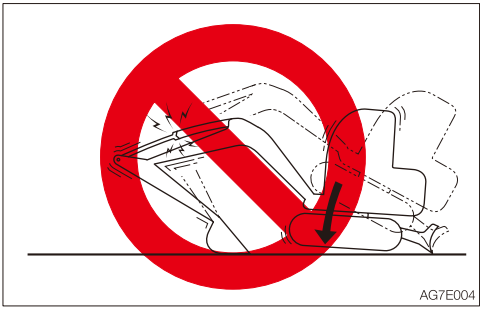

Do not support the machine body with the hoe attachment when the body is lowering with the arm cylinder fully extended. Doing so concentrates the load on the arm cylinder and could damage the arm cylinder.

Do not drive piles with the bucket or dig by banging the bucket

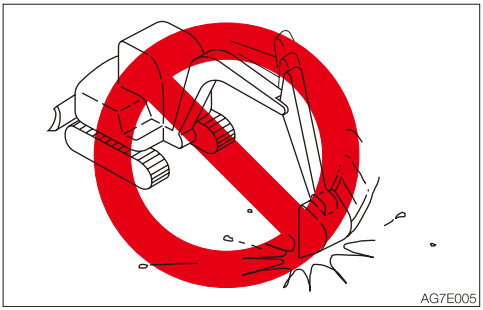

Doing so will shorten the service life of the hoe attachment. Use the hydraulic force to dig.

Do not perform operations using the machine's dropping force



Putting excessive strain on the machine will shorten its service life. When digging, use the hydraulic force of the cylinders and the shallow and long strokes.

Digging bedrock

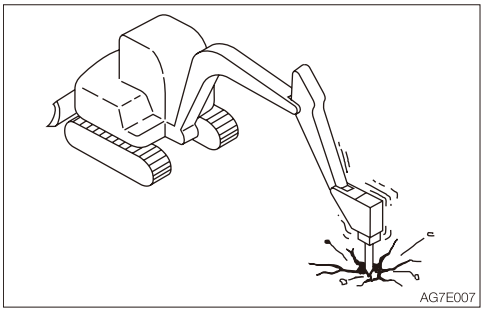

For hard base rock, break the rock up into small pieces with a breaker, etc., before digging. This prevents damage to the machine and is thus more economical in the end.

Caution on exposing the dozer blade to shocks

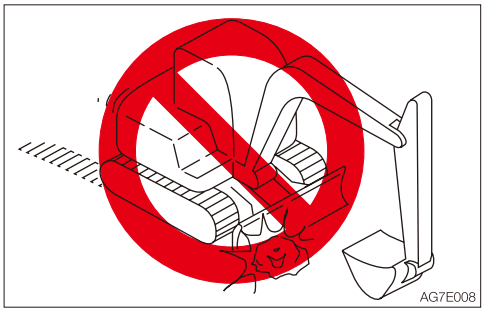

Hitting the dozer blade against rocks, etc., could damage the dozer blade or the blade cylinder.

Caution on folding the hoe attachment

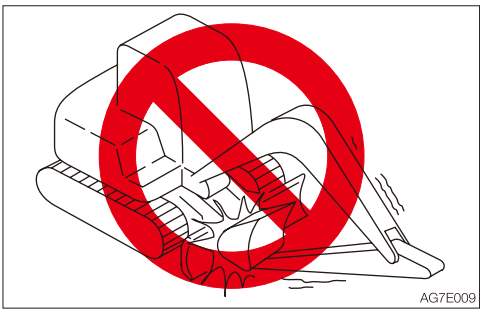

Be careful not to let the bucket to hit the dozer blade when the hoe attachment is being folded.

Do not use the dozer blade as an outrigger

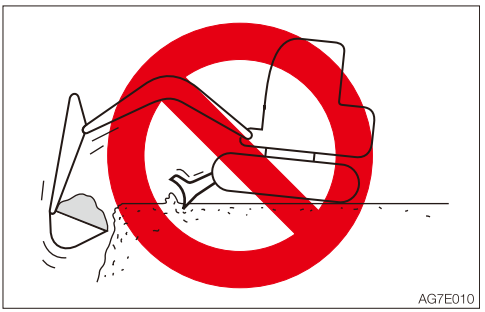

Pay attention to the dozer blade when digging

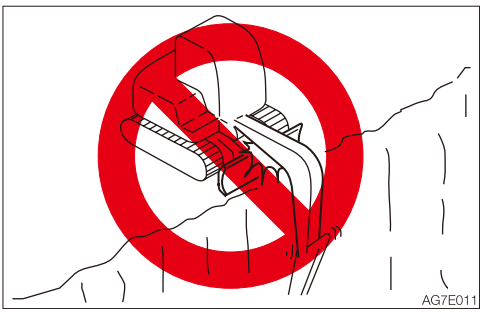

When digging deeply with the dozer blade positioned at the front, be careful that the boom cylinder and bucket do not hit the dozer blade.
Operate with the dozer blade at the rear whenever possible.

Caution on digging down with the dozer blade

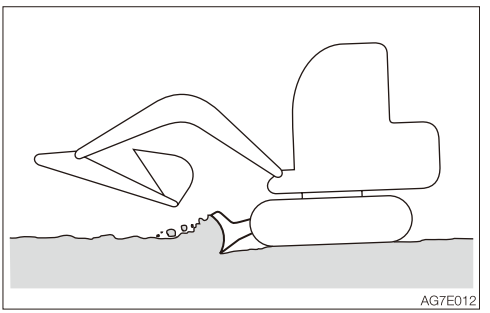

This dozer blade is designed for simple earth pushing. Do not dig down deeply with the dozer blade. Doing so could damage the dozer blade and undercarriage.

CAUTIONS ON OPERATING

Cautions on traveling

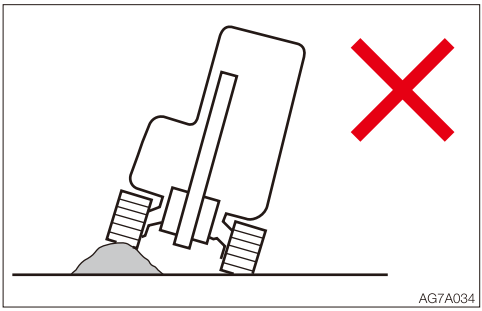

Traveling over obstacles (rocks, stumps, etc.) may put a great load on the machine body and may cause damage to it. Avoid crossing over obstacles whenever possible. If you must do so, keep the hoe attachment near the ground, travel at a low speed, and go over the obstacle at the center of the crawler.

Cautions on traveling in 2nd (High) speed

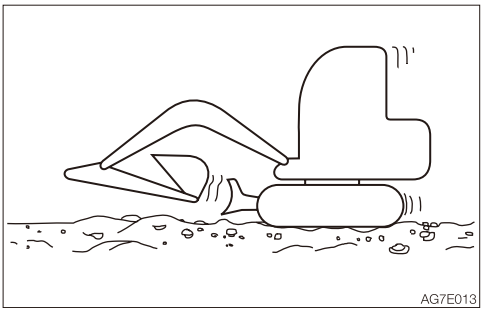

- On uneven ground, maintain the low speed and avoid starting, stopping or changing directions abruptly.
- When a load greater than a set value is applied during traveling in 2nd (high) speed, the speed will automatically slow down to 1st (low) speed. When the load becomes lighter, the speed will increase and return to 2nd (high) speed. It should be noted that the travel speed changes depending on the load condition (for machines with the automatic travel shift-down system).
- When traveling in 2nd speed, do so with the dozer blade at the front.

Cautions on using machine in water

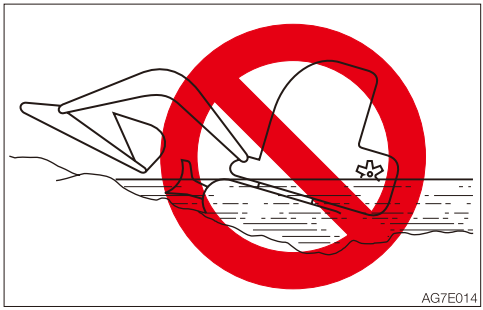

If the rear of the machine is submerged in water as shown in the figure above, it causes the radiator fan to turn in water, resulting in damage to the fan. The rear of the machine must not be submerged.

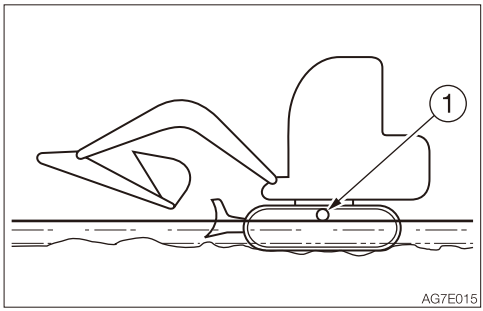

- Allowable water depth
  Use the machine in water only when the water is up to the bottom of the carrier roller (1).
- For those parts used in water for a long time, apply enough grease until the old grease is expelled.
- Never submerge the slew bearing or main body in water or sand. If submerged, contact a Takeuchi service agent for inspection.

CAUTIONS ON TRAVELING ON SLOPES

⚠ WARNING

- Never travel on slopes that are too steep for the machine to maintain its stability. (maximum gradeability: 30°, lateral tipping angle: 15°) Note that in reality, the machine's stability becomes lower than the above values depending on the working condition.
- When traveling on slopes, lower the bucket to a height of 20 to 30 cm (8 to 12 in.) above the ground. When climbing a steep slope, extend the hoe attachment to the front. In emergencies, lower the bucket to the ground and stop the machine.
- When traveling on slopes or grades, drive slowly in 1st (low) speed.
- When climbing a hill, keep the operator's seat facing the hillside. When descending a hill, keep the operator's seat facing the downhill direction. In either case, travel must be done while paying attention to the ground in front of the machine.
- Do not descend slopes in reverse.

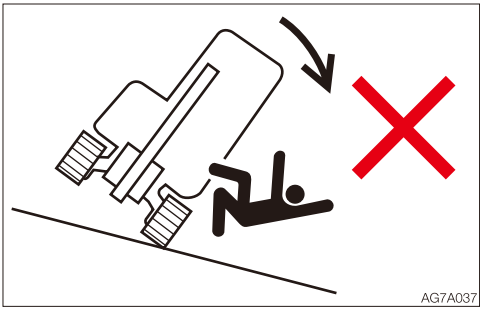

- Do not change directions on slopes or traverse slopes. First return to a flat surface, and then take an alternative path.
- The machine may slip sideways even on a slight slope if they are covered with grass or dead leaves, or when traveling on a wet metal plate or frozen surfaces. Do not allow the machine to position sideways to slopes.

Traveling posture on slopes
Climbing slopes

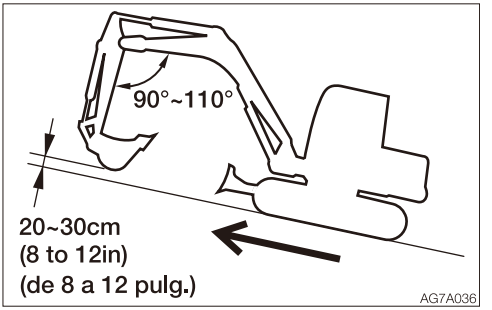

When climbing slopes of 15° or more, maintain the machine posture as shown in the figure above.

Descending slopes

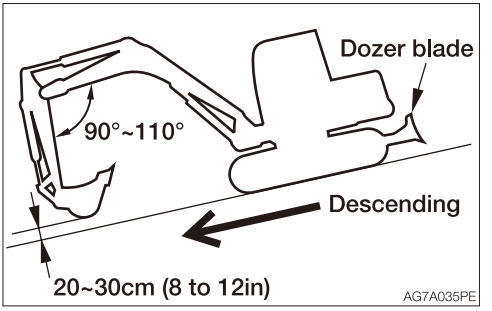

When descending slopes of 15° or more, slow down the engine speed and maintain the machine posture as shown in the figure above.

Braking when descending slopes

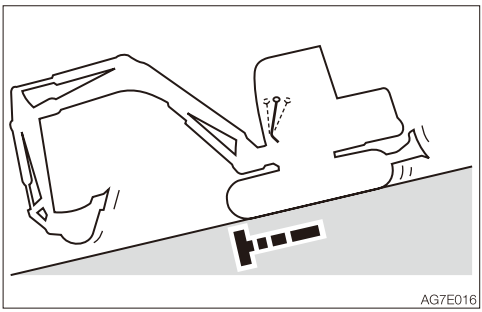

When descending slopes, the brakes are applied automatically once the travel levers are returned to the neutral position.

If the crawler slips

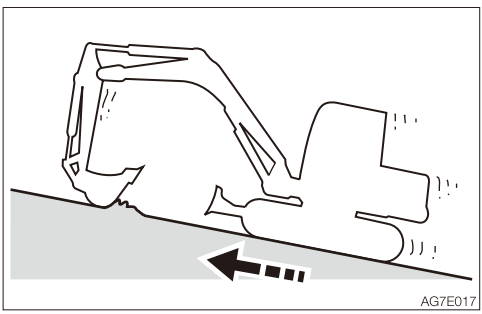

If the crawler slips while climbing a slope and impossible to travel, use the pulling force of the arm to climb the slope.

If the engine stops

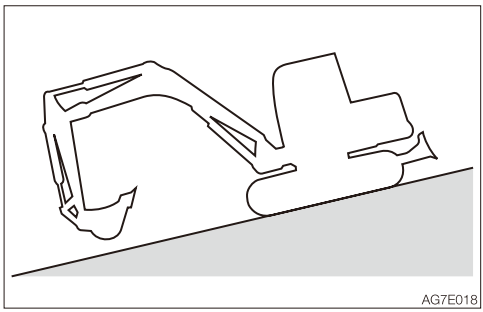

If the engine stops when descending a slope, set the travel levers to the neutral position, stop the machine, then start the engine.

Do not open the door while traveling on slopes



Opening the door while traveling on slopes is dangerous, as the force required to open and close the door changes abruptly. Always keep the door closed when traveling on slopes.

GETTING OUT OF MUD

If the machine gets stuck in mud, use the procedure below to get it out.

If one crawler is stuck

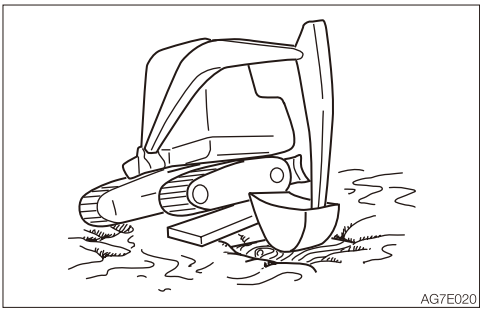

1. Swing the bucket to the side of the crawler being stuck.
2. Set the arm and boom to an angle of 90 to 110°.
3. Press the bottom of the bucket (not the teeth) against the ground.
4. Place a plank or the like under the lifted crawler.
5. Lift the bucket and slowly move the machine out of the mud.

If both crawlers are stuck

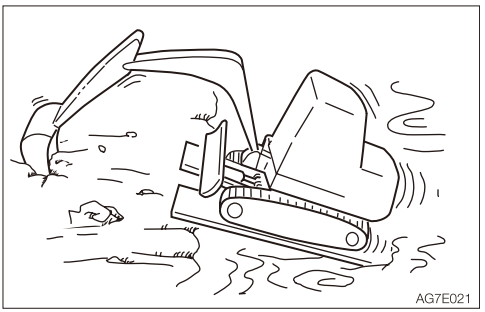

1. Perform the steps 1 to 4 above for both crawlers.
2. Dig the bucket into the ground in front of the machine.
3. Pull with the arm while traveling forward to slowly move the machine out.

OPERATIONS POSSIBLE WITH THIS MACHINE

Excavating

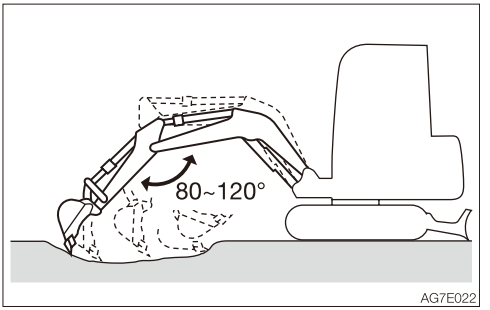

1. Set the dozer blade on the side opposite to the side you want to dig on.
2. Use the arm and bucket and dig with shallow, long strokes. The maximum digging force can be obtained when the boom and arm angle is 80 to 120°. Use this angle for effective digging.

Digging ditches

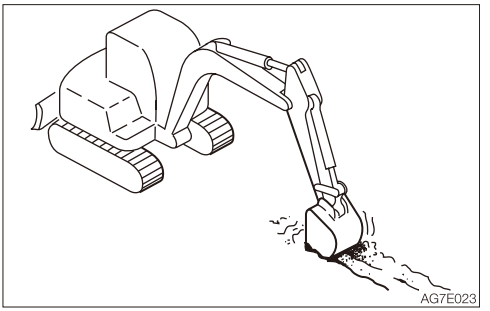

Install a bucket suited for digging ditches and set the crawlers parallel to the ditch to be dug for greater efficiency.
When digging wide ditches, dig the sides first, and then dig the center.

Digging side drains

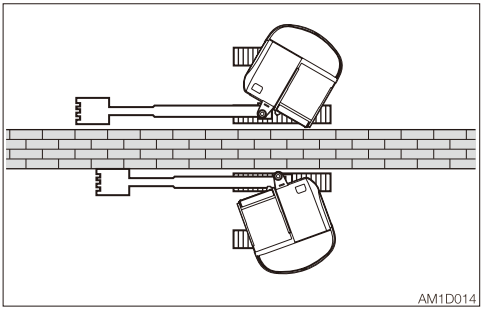

Use the boom swing function to dig side ditches as shown in the figure.

Loading

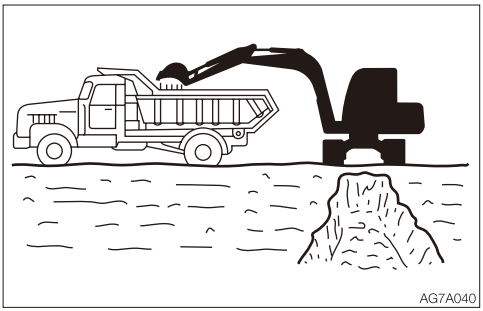

When loading dirt onto a truck bed, load from the back of the truck, as it is easier and able to load more load than doing it from the front.
Also, use a small slewing angle for greater efficiency.

Leveling

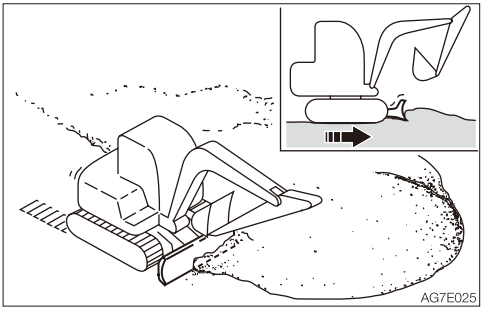

1. Bring the hoe attachment close to the body.
2. Gradually remove the dirt from the side of the mound.
3. Once the mound is low, remove the dirt from the top. If the load becomes too heavy for the machine body, adjust by raising or lowering the dozer blade.

PARKING THE MACHINE

PARKING

⚠ WARNING

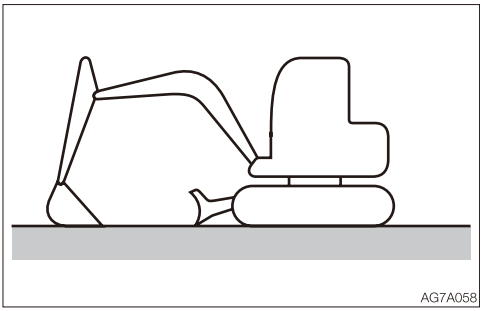

- **Park the machine on a flat, rigid and safe ground. Set the parking brake.**

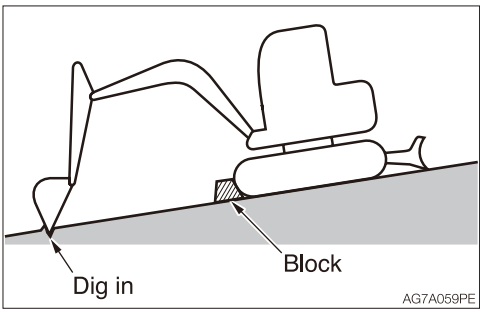

If you must park on a slope or incline, park the machine securely and block the movement of the machine.

- **When parking on a street, use barriers, caution signs, lights, etc., so that the machine can easily be seen even at night to avoid collision with other vehicles.**
- **Before leaving the operator's seat, raise the safety lock lever to engage the lock and stop the engine. Also, be sure to remove the key, lock the door and covers, take it with you and store it in a specified place.**

1. Set the left and right travel levers to the neutral position.
2. Return the throttle controller to set the engine to low idling.
3. Lower the bucket and the dozer blade to the ground.
4. Raise the safety lock lever to the locked position.
5. Stop the engine and remove the key.
   Refer to "Stopping the engine" on page 3-5.
   For machines equipped with accumulator: Refer to "Operating the machine with an accumulator (If equipped)" on page 2-96.

INSPECTION AND CHECKS AFTER STOPPING THE ENGINE

1. Check for oil or water leak and inspect the working equipment, covers and undercarriage. If any irregularities are found, repair.
2. Fill up the fuel tank.
   Refer to "Inspecting the fuel level" on page 5-21.
3. Remove any paper scraps or dirt from the engine room.
4. Remove any mud from the undercarriage.

Locking

Be sure to lock the following places:

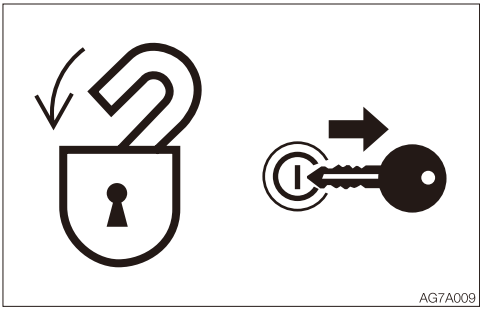

- Cab door
- Engine hood
- Covers

HANDLING IN COLD CLIMATES

PREPARING FOR COLD CLIMATES

Starting engine in cold climates is not easy, and it becomes more difficult if the coolant freezes. Prepare for cold-climate problems as follows.

Replacing the fuel and lubricant
Replace the hydraulic oil, engine oil and fuel with those intended for cold climates.
Refer to “Fuel and lubricant table” on page 5-4.

Engine coolant

⚠ WARNING

The engine coolant is combustible. Keep away from flame.
Use long-life coolant (antifreeze) and tap water for the engine coolant.

Note: New machines are delivered with JIS Type 2 long-life coolant (antifreeze) at a concentration of 50%.
Refer to “Fuel and lubricant table” on page 5-4.

Battery
As the temperature drops, the battery performance decreases.
Inspect the battery. If it is discharging, contact a Takeuchi service agent to have the battery recharged.
Refer to “Inspecting the battery” on page 5-30.

CAUTIONS AFTER OPERATIONS

Observe the following cautions to prevent mud, water, or the undercarriage from freezing and making it impossible for the machine to move.

- Remove all mud and water from the machine body. In particular, wipe the hydraulic cylinder rod clean to prevent damage to the seal caused by mud or dirt on the rod surface getting inside the seal together with drops of water.
- Park the machine on hard and dry ground. If this is impossible, park the machine on a wooden board placed on ground.
- Drain any water in the fuel tank to prevent it from freezing.
  Refer to “Draining the water from the fuel tank” on page 5-29.
- As the battery capacity drops markedly in low temperatures, cover the battery or remove it from the machine and keep it in a warm place.
  If the electrolyte level is low, add distilled water in the morning before beginning work. To prevent the battery electrolyte from freezing in the night, do not add water after the day’s work.

AFTER THE COLD CLIMATE

When the climate becomes warmer, do as follows:

- Replace the fuel and oil for all parts with those specified in the “Fuel and lubricant table”.
  Refer to “Fuel and lubricant table” on page 5-4.
- If a coolant of “one season type” is used, drain the cooling system completely, clean out the inside of the cooling system thoroughly, and fill with tap water.
  Refer to “Cleaning the engine cooling system” on page 5-48.

HANDLING RUBBER CRAWLERS

Rubber crawlers have an inherent weakness, lack of strength, due to their use of rubber. Be sure to observe the prohibitions and cautions below to prevent the crawlers from being damaged or coming off.

PROHIBITIONS

Do not travel or operate the machine in the following places:



- Traveling and slewing on crushed rock, extremely rough hard rock, steel beams, scrap iron, or near the edges of steel plates will cause damage to the rubber crawlers.



- Traveling on riverbeds or places where there are large numbers of boulders may cause the stones to get caught and damage the crawler or make the crawler come off.
- Do not use the machine on the seashore. The salt may corrode the steel core.

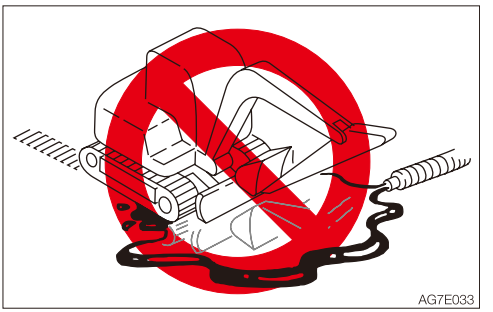

- Do not let fuel, oil, salt or chemical solvents get on the crawlers. These substances may corrode the bonding of the steel cores on the crawlers, resulting in rust or peeling. If any of these substances gets on the crawler, immediately clean it off with water.



- It will cause an irregular wear or damage to the lugs, if the machine travels on irregular surfaces such as recently paved with asphalt, exposed to a bonfire or of hot iron sheets under the blazing sun.
- Do not move earth in places where the rubber crawlers may slip. Doing so may speed up lug wear.

CAUTIONS

Observe the following cautions when operating the machine:

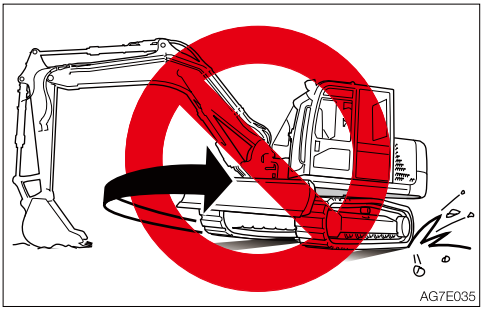
AG7E035

- Do not turn the undercarriage with the front of the machine body lifted using the hoe attachment (the upperstructure is not turned). Doing so will twist the crawlers with the load concentrated on a single point on the crawler belt, causing rapid damage to the crawlers.
- Avoid changing course abruptly or spin-turning on concrete surfaces whenever possible. Doing so may wear or damage the rubber crawlers.
- Avoid drops that may expose the rubber crawlers to strong shocks.
- Salt, potassium chloride, ammonium sulfate, potassium sulfate, and triple superphosphate of lime can damage the crawler belts. If any of these substances gets on the crawler belts, wash if off thoroughly with water.
- Do not let the sides of the rubber crawlers rub against concrete or walls.
- Do not damage the rubber crawlers by hitting the bucket against them.
- Be especially careful on snowy or frozen surfaces in winter, as the crawler belts tend to slip in such conditions.
- Use rubber crawler belts at temperatures between –25°C to +55°C (–14°F to 131°F).
- When storing the rubber crawlers for long periods of time (three months or more), do so indoors in a place not exposed to direct sunlight or rain.

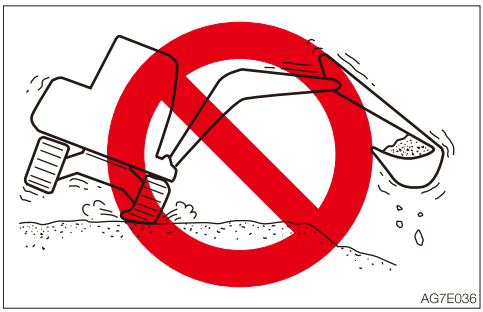
AG7E036

- Rubber crawler belts are not as stable as steel crawler belts since the entire lugs are made of rubber. Be very careful when slewing and swinging sideways.

PREVENTING THE RUBBER CRAWLERS FROM COMING OFF

Observe the following cautions to prevent the crawler from coming off:

- Always keep the crawlers at the proper tension.

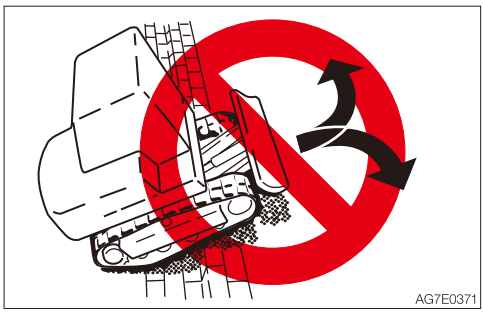
AG7E0371

- When traveling over a large step such as a cobblestone or rock (20 cm (8 in.) or deeper), climb up the step at the right angle and do not change courses on top of the step.

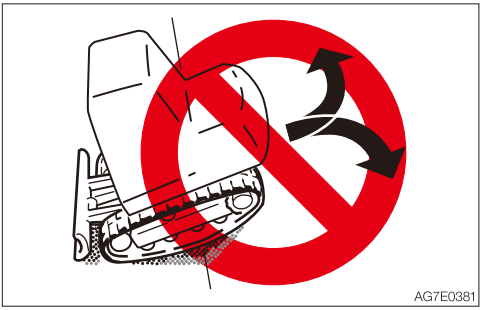

• When climbing in reverse, do not change directions at the point where the slope starts.



• Avoid traveling by setting one crawler on a slope or projecting portion and the other crawler on a flat surface (with the machine at a tilt of 10° or more). Travel with both crawlers set on flat surfaces.

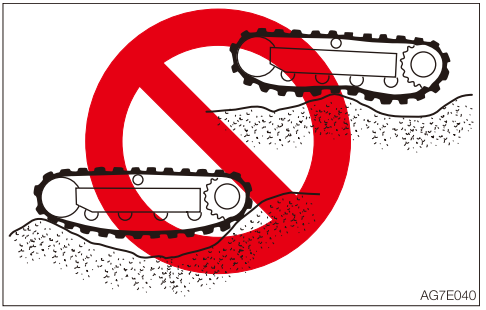



• Do not change directions when the crawler belts are slack as shown in the figure.

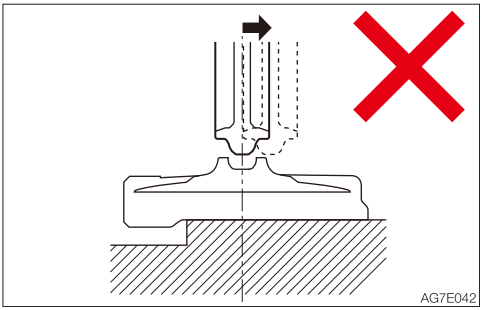

• The rubber crawler belts will come off if the machine travels backward in this condition.

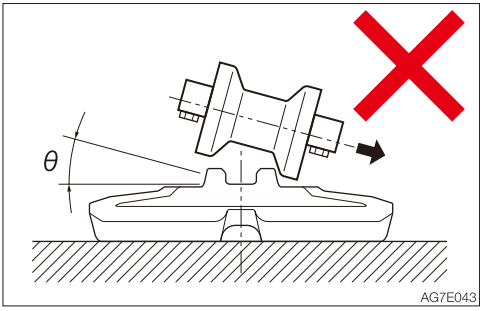

• The rubber crawler belts will come off if the machine turns in this condition.

TRANSPORT



LOADING AND UNLOADING

⚠ WARNING

The machine may roll or tip over or fall while being loaded or unloaded. Take the following precautions:

- **Select a firm, level surface and keep sufficient distance from road shoulders.**
- **Secure the ramps of adequate strength and size to the truck bed. The slope of the ramps must not exceed 15°. If the rumps are bowed down too low, support them with poles or blocks.**
- **Never use the working equipment to load or unload the machine. Doing so may result in tipping over or falling down of the machine.**
- **Keep the truck bed and loading ramps clean of oil, soil, ice, snow, and other materials to prevent the machine from sliding sideways. Clean the crawlers.**
- **Chock the transporter wheels to prevent movement.**
- **Turn off the deceleration switch and auto-deceleration switch. Otherwise, the engine speed may suddenly increase to cause troubles.**
- **When being loaded or unloaded, travel slowly in 1st (low) gear by following the signal from the signal person.**
- **Never change courses on the ramps.**
- **Do not slew/swing on the ramps. The machine may tip over.**
- **When slewing/swinging on the truck bed, do it slowly as the footing should be unstable.**
- **Lock the cab door after being loaded, if applicable. Otherwise, the door may open during transport.**
- **Chock the tracks and secure the machine to the truck bed with wire rope or chain.**

When loading or unloading the machine, be sure to use ramps or a platform and follow the procedure below.

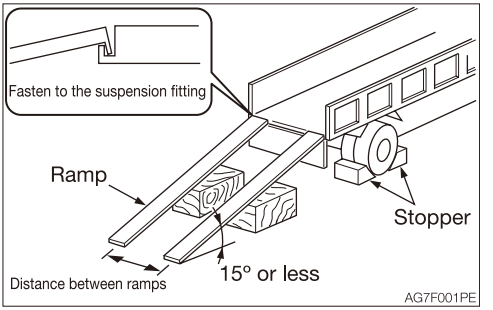

1. Set the parking brake on the transporter and chock the wheels.
2. Fix the ramps securely to the truck bed. The slope of the ramps must not exceed 15°.
3. Align the center of the truck bed with the center of the machine, and of the ramp with the center of the crawler.
4. Make sure the dozer blade does not hit the ramps.
5. Lower the hoe attachment as far as possible without letting it touch the transporter.
6. Decrease the engine speed.

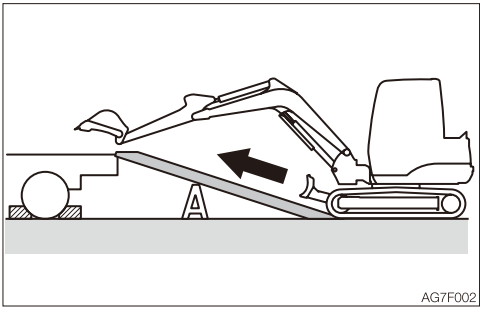

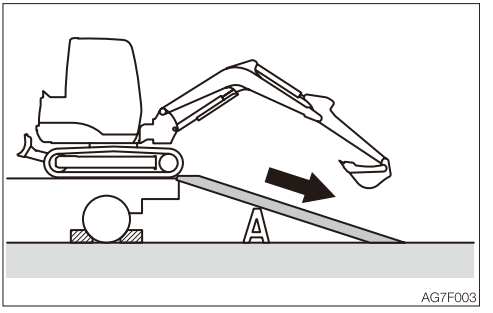

7. Drive the machine straight toward the ramps and travel up or down the ramps at 1st (low) speed, by following the signal from the signal person.
8. Load the machine at the specified position on the transporter.
   Refer to “Transporting posture” on page 4-6.

HOISTING THE MACHINE

⚠ WARNING

- **Know and use the correct crane signals.**
- **Check the hoisting equipment for damaged or missing parts on a daily basis and replace as necessary.**
- **When hoisting, use a wire rope capable of lifting the machine mass.**
- **Hoist the machine in only as manner described in the procedure below. Do not do it in any other manner. Doing so is dangerous as it may result in the machine losing its balance.**
- **Do not hoist the machine with an operator on it.**
- **When hoisting, hoist slowly so that the machine does not tip.**
- **Keep everyone out of the area when hoisting. Do not move the machine over the heads of the persons.**

IMPORTANT: This hoisting method applies to machines with standard specifications. The center of gravity differs according to the attachments and optional equipment installed.
Contact your Takeuchi service agent for details.

Hoisting

1. Slew the upperstructure so that the dozer blade is at the rear of the machine (set the upperstructure parallel to the track frame).
2. Raise the dozer blade fully.
3. Extend the bucket cylinder and arm cylinder fully to raise the boom to its uppermost position.
4. If the boom is swung to either the left or right side, set it in the neutral position.
5. Raise the safety lock lever to the locked position.
6. Stop the engine, remove the starter key and get off the machine.
7. Install the wire ropes as shown on the figure below. Install the wire ropes and hoisting attachment without letting them touch the machine body.
8. Hoist the machine slowly until it leaves the ground.
9. Stop hoisting until the machine becomes stable, and then start hoisting the machine slowly again.

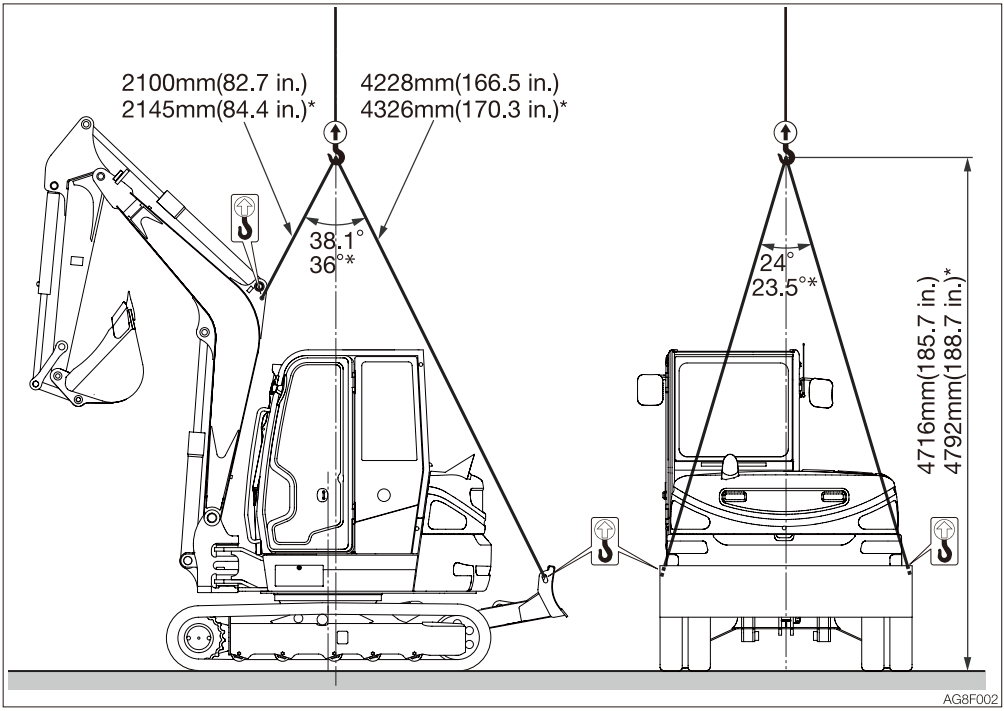
2100mm(82.7 in.)
2145mm(84.4 in.)*
4228mm(166.5 in.)
4326mm(170.3 in.)*
38.1°
36°*
24°
23.5°*
4716mm(185.7 in.)
4792mm(188.7 in.)*
AG8F002

*: Canopy

SECURING THE MACHINE

After loading the machine at the specified position, secure it as described below.

Transporting posture

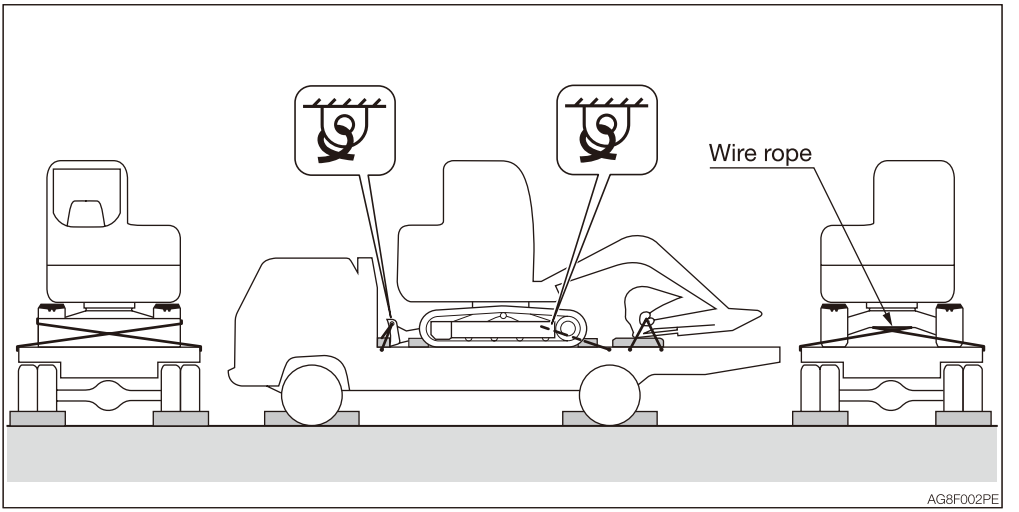

1. Lower the dozer blade.
2. Extend the bucket cylinder and arm cylinder fully, and then lower the boom.
3. Raise the safety lock lever to the locked position.
4. Stop the engine, remove the starter key and lock all locks.
5. Place the stoppers (chocks) in front and behind the crawlers.
6. Install a chain or wire rope over the lower frame of the machine and fasten it securely to prevent the machine from slipping sideways.
7. Secure the bucket with a chain or wire rope.

IMPORTANT: Place a wooden block under the bucket to protect the floor from damage caused by the bucket.

Precautions to be taken during transportation

⚠ WARNING

- **Know and follow the applicable safety rules, vehicle code and traffic laws when transporting the machine.**
- **Select the best transport route by considering the length, width, height and weight of the truck with the machine loaded on it.**
- **Never abruptly start or stop or run at a high speed at the sharp curves during transport. Doing so will move or lose the balance of the loaded machine.**

MAINTENANCE



GENERAL

MAINTENANCE OVERVIEW

To keep the machine in good condition and use if for a long period, perform the inspection and maintenance properly and safely following the procedures recommended by this manual.

The inspection and maintenance items are divided into groups according to the machine's total operating time: every 10 hours (walk-around and daily inspection), every 50 hours, every 250 hours, etc. Refer to the hour meter readings to determine when to schedule an inspection and maintenance. Items for which it is not possible to determine the inspection and maintenance interval are included under "When Required".

When operating the machine in extremely harsh environments (with high dust levels or high temperatures), inspection and maintenance should be performed earlier than the times specified on the Maintenance List.

CAUTIONS ON MAINTENANCE

Do not perform any other inspection and maintenance works than those listed in this manual.
For works not listed in this manual, ask your sales or a service dealer for help.

Keep the machine clean
- Clean the machine before performing inspection and maintenance and try to keep it clean.
- Stop the engine before washing the machine. Cover the electrical parts so that water cannot enter. Water on electrical parts could cause short-circuits or malfunctions. Do not use water or steam to wash the battery, electronic control components, sensors, connectors or the operator's compartment.

Fuel, lubricant and grease
- Choose fuel, lubricant and grease by following to the "Fuel and lubricant table".
- Use fuels, lubricants and greases which do not contain water, and be careful to keep dirt out when changing or replenishing fuel, lubricant or grease.
- Store fuels, lubricants and greases in the prescribed places and in such a way that no water or dirt can get in them.

Cautions on refueling
- If the port includes a strainer, do not remove the strainer when fueling.
- After fueling, be sure to securely tighten the fuel filler cap.
- Do not add more than the specified amount of fuel.

Do not use fuel to clean parts
Do not use fuel to clean parts. Use a non-combustible cleaning agent.

Keep dirt out
When mounting and removing parts, do so in a place where there is no dust, clean the working area and the part, and keep dirt out.

Clean the installation surfaces

When installing and removing parts, be sure that the surfaces of contact of the parts are clean. If the sealing grooves of the surface of contact are damaged, consult your sales or service dealer for repair or release.

Seals and split pins

- Be sure to replace all seals and cotter pins with new ones.
- When installing, be careful not to damage or twist the seal.

Sealing tape

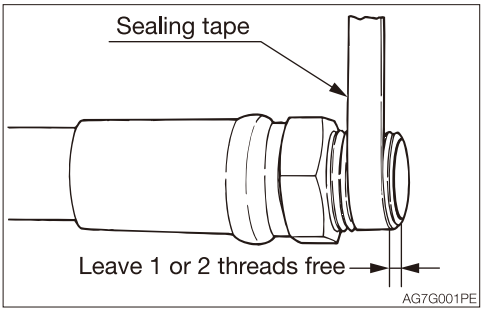

- When wrapping the plug with sealing tape, remove any old sealing tape from the threads and clean the threads.
- Wrap the thread tight with seal tape starting 1 or 2 threads away from the thread end.

Disposing of wastes

- Always collect oil that is drained from the machine in containers. Improperly disposed waste oil can cause environmental harm.
- Follow appropriate laws and regulations when disposing of harmful objects such as oil, fuel, cooling water, coolant, filters and batteries.

Check after maintenance

- Gradually increase the engine speed from a low idle to maximum speed and check that there is no oil or water leaking from serviced parts.
- Operate each control lever and check that the machine is operating properly.

Cautions on handling of battery wiring

- Disconnect the wiring from the both terminals (+ and –) on the battery before working on the electrical system or doing electric welding.
  Always disconnect it from the earth side (–). When connecting, connect the earth side last.
- Do not disconnect the battery wiring while the engine is moving. Otherwise, the electric circuits of the rotary converter or others may be damaged.

SERVICE DATA

FUEL AND LUBRICANT TABLE

Select the appropriate fuel, lubricant and grease according to the temperature by referring to the table below.

- Regardless of the specified time, change the oil if it becomes too dirty or degraded.
- When refilling, never mix oils of different brands. If a brand is to be changed, replace the whole fuel/oil.

Fuel

Diesel fuel specifications

Diesel fuel should comply with the following specifications. The table lists several worldwide specifications for diesel fuels.

Diesel fuel specification	Area
ASTM D975 No.1-D S15 No.2-D S15	USA Canada
Bio-diesel fuel Biodiesel blends up to B7 ASTM D6751, D7467	
EN590: 2009	European union
Bio-diesel fuel Biodiesel blends up to B7 EN14214, EN590	

Diesel fuel specification	Area
BS2869-A1 or A2	United kingdom
ISO 8217DMX	International
JIS K2204 Grade No.2 Bio-diesel fuel Biodiesel blends up to B7 JIS K2390	Japan

Fuel tank	**Diesel fuel**	To maintain the performance and service life of the engine, always use clean and high-quality fuel. • To avoid freezing in cold climates, use a diesel fuel that still functions when the temperature is at least 12°C (21.6°F) below the lowest expected ambient temperature. • Use a diesel fuel that has a cetane number of 45 or higher. When operating at a very low temperature or at a high altitude, a higher cetane number fuel will be required. • Use fuel with sulfur content of less than 15 ppm by volume. Especially in the U.S.A. and Canada, ultra-low sulfur fuel should be used. A higher sulfur content fuel may cause sulfuric acid corrosion in the cylinders of the engines. • Never mix kerosene, used engine oil, or residual fuel with the diesel fuel. Use of kerosene is prohibited. • Poor quality fuel can reduce engine performance and / or cause engine damage. • Fuel additives are not recommended. Some fuel additives may cause poor engine performance. • Use zinc- and sodium-free fuel. • Do not use the fuel that has been in storage for a long time. • Do not use the fuel purchased from a non-authorized dealer.
		Precautions when using bio-diesel fuel The warranty of the engine manufacturer may be voided by using a bio-diesel fuel that does not meet the standard or that is deteriorated.

Lubricant

Location	Type	Type by air temperature -4 14 32 50 68 86 104°F -20 -10 0 10 20 30 40°C	When to replace
Engine oil pan	API: CD class ACEA: E3/E4/E5 class JASO: DH1 class	SAE 10W-30 SAE 15W-40	Every 500 hrs. or once a year (whichever comes first)
Hydraulic oil tank	Takeuchi genuine hydraulic oil 46	ISO VG46	Every 4000 hrs.***
	Biodegradable oil recommended by Takeuchi**** Mobil EAL Envirosyn 46H Panolin HLP Synth 46	ISO VG46	Every 4000 hrs.
	Anti-wear hydraulic oil	ISO VG32 ISO VG46 ISO VG68	Every 2000 hrs.***
Engine cooling system	Cooling water (water + coolant)** SAE: J814C, J1941, J1034 or J2036 ASTM: D6210 or D4985 (USA) JIS: K-2234 (Japan)	Mixture of 50% coolant Mixture of 30% coolant	Every 2000 hrs. or every two years (whichever comes first)
Travel reduction gear	Gear oil API: GL-4	SAE 90	Every 1000 hrs after the initial 250 hrs*.
Slew bearing	Lithium based grease EP-2 NLGI No.2	—	Every 50 hrs.
Working equipment			Daily or every 10 hrs.

*: If the ratio of traveling time to total operating time is high, replace the gear oil earlier than the specified time.
**: For water, use tap water (soft). Do not use well or river water. When the ambient temperature drops below 0°C (32°F), add coolant (antifreeze). Follow the coolant manufacturer's instructions to determine the mixture ratio.
***: The hydraulic oil replacement interval depends on the type of hydraulic oil being used. New machine are delivered with Takeuchi genuine hydraulic oil 46, and the hydraulic oil replacement intervals indicated in this manual assume that Takeuchi genuine hydraulic oil 46 is being used. When using conventional antiwear hydraulic oil, the hydraulic oil should be replaced every 2000 hours.
**** : When replacing a mineral oil with a biodegradable oil, the residual mineral oil in the machine should be about 2% or less, as complying with the ISO 15380. For details, refer to "Biodegradable oil" on page 8-11.

API standard: American Petroleum Institute
ACEA standard: Association des Constructeurs Européens d'Automobiles
JASO standard: Japanese Automobile Standards Organization
SAE standard: Society of Automotive Engineers

Volume

Engine oil pan	Engine cooling system	Hydraulic oil tank	Fuel tank	Travel reduction gear
Upper limit 7.4 L (7.8 US qt.) Lower limit 4.0 L (4.2 US qt.)	9 L (9.5 US qt.)	System 74 L (19.5 US gal.) Tank 41 L (10.8 US gal.)	Level capacity 70 L (18.5 US gal.)	0.6L X 2 (0.63 US qt.) X 2

REGULARLY REPLACE THE HYDRAULIC OIL

When a hydraulic breaker is used, the oil deteriorates more quickly than that used for a usual excavation operation. Be sure to replace the hydraulic oil and the return filter elements.

- Failure to replace these in time can lead to damage to the machine and the breaker hydraulic system. To prolong the service life of the hydraulic devices, properly replace the hydraulic oil and the return filter elements according to the table below.
- When replacing the hydraulic oil, clean the suction strainer.

Replacement interval (hours)

Item	Hydraulic oil	Filter element
1st time	—	25
2nd time	—	100
Periodically	1200 (600)	200

When the breaker operating ratio is 100%.
Refer to “Hydraulic breaker” on page 8-6.

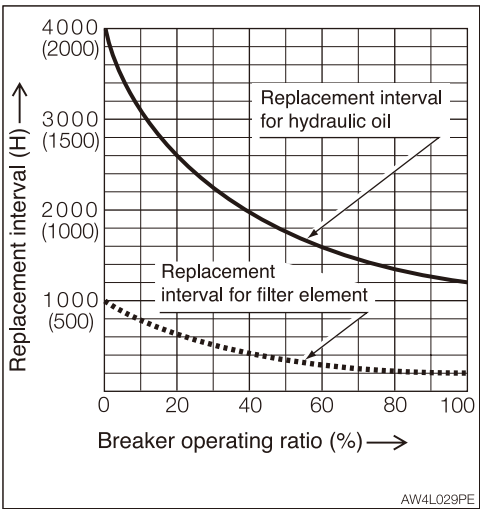

( ): When a conventional antiwear hydraulic oil is used.

LIST OF CONSUMABLES

Periodically replace consumables such as filters and elements according to the table below.

System	Item	Part name	Part No.	When to replace
Hydraulic system	Hydraulic oil return filter	Element	15511-03900	Every 1000 hrs after the initial 250 hrs.
	Pilot line filter		15512-00703	
	Air breather filter		15520-05002	Every 1000 hrs.
Engine lubrication system	Engine oil filter	Cartridge	Y119005-35151	Every 500 hrs. or once a year (whichever comes first)
Fuel system	Fuel filter	Cartridge	Y129907-55801	Every 500 hrs.
	Water separator filter	Element	Y129A00-55730	
Air cleaner system	Air cleaner	Primary (Outer) element	Y119808-12520	Every 1000 hrs. or after 6 cleanings (whichever comes first)
		Secondary (Inner) element	19111-02772	When the primary elements are replaced.
AC system	Receiver dryer		19115-14513	Every 2 years
	Ventilation filter	Element	19115-13680	Once a year or if clogging remains after cleaning
	Circulation filter			

LIST OF TOOLS (IF EQUIPPED)

Code	Part name	Part No.	Remarks
1	Spanner	Y28110-100120	10 - 12
2	Spanner	Y28110-140170	14 - 17
3	Screwdriver	Y104200-92350	(+) (–) replaceable shank
4	Filter wrench	Y119640-92750	ø80
5	Hammer	16903-00330	3/4
6	Monkey wrench	16904-00250	250 mm
7	Pliers	16905-00200	200 mm
8	Spanner	16900-01922	19-22
9	Spanner	16900-02427	24-27
10	Single-ended wrench	16901-00013	13
11	Single-ended wrench	16901-00041	41
12	Combination wrench	16909-00019	19
13	Hex. wrench	16906-00400	4 mm
14	Hex. wrench	16906-00500	5 mm
15	Hex. wrench	16906-00600	6 mm
16	Hex. wrench	16906-00800	8 mm
17	Hex. wrench	16906-01000	10 mm
18	Hex. wrench	16906-01400	14 mm
19	Tool case	16914-00005	
20	Case	16919-00001	
21	Grease gun	16910-60610	500 cc
22	Drain connector	15545-12601	
23	Filter wrench	Y171301-92750	ø90
24	Filter wrench	Y171340-92760	For water separator filter

LIST OF TIGHTENING TORQUES

Nuts and Bolts (for ISO strength category 10.9)

Tighten nuts and bolts at the torques shown on the table below, unless otherwise specified.

- The tightening torques used for the mounted plastic covers are not listed in the table below. Consult your sales or service dealer for details. They will be damaged if over tightened.
- When replacing nuts and bolts, replace them with nuts and bolts of the same size and standards.
- Tighten nuts and bolts alternately (top, bottom, left then right) or in 2 or 3 times so that they are evenly tightened.

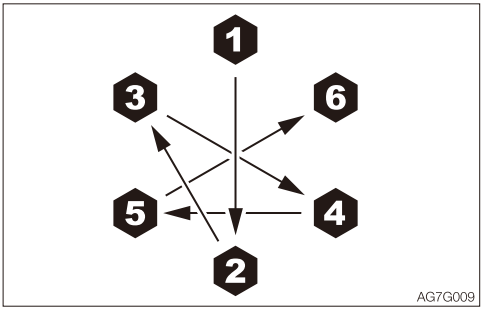

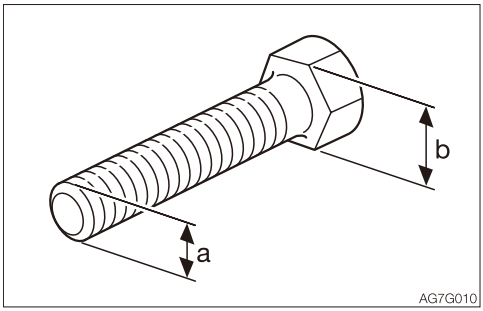

Classification	Head width (b)	Size (a) x pitch	Tightening torque	
			General connection points	
	mm	mm	N·m	ft-lb
Coarse	10	M6 x 1.0	9.8±0.8	7.2±0.6
	12, 13	M8 x 1.25	23±1.8	17±1.4
	14, 17	M10 x 1.5	47±3.8	35±2.8
	17, 19	M12 x 1.75	83±6.6	62±5
	19, 22	M14 x 2.0	134±10.7	99±7.9
	22, 24	M16 x 2.0	208±16.6	153±12.2
	27, 30	M20 x 2.5	411±32.9	303±24.2
Fine	12, 13	M8 x 1.0	25±2	18±1.4
	14, 17	M10 x 1.25	50±4	37±3
	17, 19	M12 x 1.5	87±7	64±5.1
	19, 22	M14 x 1.5	135±10.8	100±8
	22, 24	M16 x 1.5	221±17.7	163±13
	27, 30	M20 x 1.5	452±36.2	333±26.6

SAFETY-CRITICAL PARTS

To use the machine safely, periodically perform inspection and maintenance. The safety-critical parts listed below must be periodically replaced for an increased safety.
Serious injury or a fire could result if they are worn or damaged.

List of safety-critical parts

Unit		Safety-critical parts to be replaced periodically	When to replace
Fuel system		Fuel hoses	Every 2 years
		Packing on fuel filler cap	
Cooling system		Rubber hoses	
Heater & AC systems		Heater hoses	
		Air conditioner hoses	
Hydraulic system	Main body	Hydraulic hoses (pump - delivery)	
		Hydraulic hoses (pump - suction)	
		Hydraulic hoses (slew motor)	
		Hydraulic hoses (travel motor)	
	Working equipment	Hydraulic hoses (boom cylinder piping)	
		Hydraulic hoses (arm cylinder piping)	
		Hydraulic hoses (bucket cylinder piping)	
		Hydraulic hoses (swing cylinder)	
		Hydraulic hoses (blade cylinder)	
		Hydraulic hoses (angle blade cylinder)	
		Hydraulic hoses (pilot valve)	
		Hydraulic hoses (auxiliary piping)	
		Seat belt	Every 3 years
		Non-slip sheet	

The material of the safety-critical part listed above tends to change over time and cause wear or deterioration. It is difficult to determine the degree of deterioration at the periodic inspection, and thus they need to be replaced with new ones after a certain time to maintain their proper performance even if they appear in good condition. Note that regardless of the replacement schedule, replacement must be performed immediately if a symptom of wear is found. If a hose clamp is deformed or cracked, replace it together with the hose immediately. When replacing the safety-critical parts, ask your sales or service dealer.
In addition to the safety-critical parts, inspect the hydraulic hoses and retighten or replace as necessary. When replacing the hydraulic hoses, replace the O-rings and seals at the same time.
Check the fuel and hydraulic hoses according to the periodic schedule described below. Refer to “Maintenance”.

Type of inspection	Inspection item
Daily inspection	Leakage from the connecting parts of hydraulic or fuel hoses Damage to cab or canopy - replace*
Monthly inspection	Leakage from the connecting parts of hydraulic or fuel hoses Damaged hydraulic or fuel hoses (cracks, wear and tear)
Annual inspection	Leakage from the connecting parts of hydraulic or fuel hoses Deteriorated, twisted, damaged hydraulic or fuel hoses (cracks, wear and tear) or hoses in contact with other parts of the machine

*: Canopy parts No. 05584-00085
*: Cab parts No. 03586-00140

MAINTENANCE LIST

Inspection and maintenance item	Page
Walk-around inspection	
Inspecting by opening the engine hood and covers	5-16
Inspecting by walking around the machine	5-17
Inspecting while sitting in the operator's seat	5-17
Daily inspection (every 10 hours)	
Inspecting and replenishing the coolant	5-18
Inspecting and replenishing the engine oil	5-19
Inspecting the water separator	5-20
Inspecting the fuel level	5-21
Inspecting the hydraulic oil tank level and replenishing	5-22
Lubricating the working equipment	5-23
After the initial 50 hours (only for new machines)	
Inspecting and adjusting the fan belt	5-24
Inspecting and adjusting the compressor belt (AC)	5-25
Every 50 hours	
Inspecting and adjusting the crawler tension	5-26
Lubricating the slew bearing	5-28
Draining the water from the fuel tank	5-29
Inspecting the battery	5-30
Every 100 hours	
Cleaning the water separator	5-31
After the initial 250 hours (only for new machines)	
Replacing the hydraulic oil return filter	5-32
Replacing the pilot line filter	5-33
Replacing the travel motor gear oil*	5-34
Every 250 hours	
Inspecting and adjusting the fan belt	5-35
Inspecting and adjusting the compressor belt (AC)	5-35
Cleaning the air cleaner	5-35
Cleaning the radiator fins and the oil cooler fins	5-36
Cleaning the air filter (AC)	5-37
Cleaning the condenser (AC)	5-38
Inspecting the refrigerant (gas) level (AC)	5-39

*: If the percentage of the traveling time within the total operating time is high, replace the gear oil earlier than the specified time.
(AC): Air conditioner

Inspection and maintenance item	Page
Every 500 hours	
Replacing the engine oil and the oil filter	5-41
Replacing the fuel filter	5-43
Inspecting the slew pinion gear	5-44
Every 1000 hours	
Replacing the hydraulic oil return filter	5-45
Replacing the pilot line filter	5-45
Replacing the travel motor gear oil*	5-45
Replacing the air cleaner element	5-45
Replacing the air breather filter	5-46
Inspecting and adjusting the engine valve clearance	5-46
Every 1500 hours	
Inspecting, cleaning and checking operation of the engine fuel injectors	5-47
Inspecting the crankcase breather system	5-47
Every 2000 hours	
Cleaning the engine cooling system	5-48
Lapping the engine valve seats (If necessary)	5-49
Inspecting the accumulator (If equipped)	5-49
Every 3000 hours	
Inspecting the turbocharger (blow wash as necessary)	5-51
Every 4000 hours	
Replacing the hydraulic oil and cleaning the suction strainer	5-52
When required	
Replacing the bucket teeth and the side cutters	5-55
Replacing the bucket	5-58
Adjusting the gap between the bucket and arm (If equipped)	5-60
Inspecting and replenishing the windshield washer fluid	5-61
Draining the water from the water separator	5-62
Lubricating the levers and pedals	5-63
Inspecting the rubber crawlers	5-64
Replacing the rubber crawlers	5-65
Every 2 years	
Replacing the receiver dryer	5-67

*: If the percentage of the traveling time within the total operating time is high, replace the gear oil earlier than the specified time.

WALK-AROUND INSPECTION

Perform the following inspections every day before starting the engine for the first time.

⚠ WARNING

- **Before operating, perform the walk-around inspections and make repairs immediately where necessary.**
- **Be sure to secure the engine hood or cover before working the inside. Do not keep the hood or cover open on a windy day or if the machine is parked on a slope.**

Before starting the engine, look around the machine and clean any combustibles from the surroundings of the engine. Also, inspect if oil or water is leaking and any nuts, bolts or electric wiring are loosened or damaged.

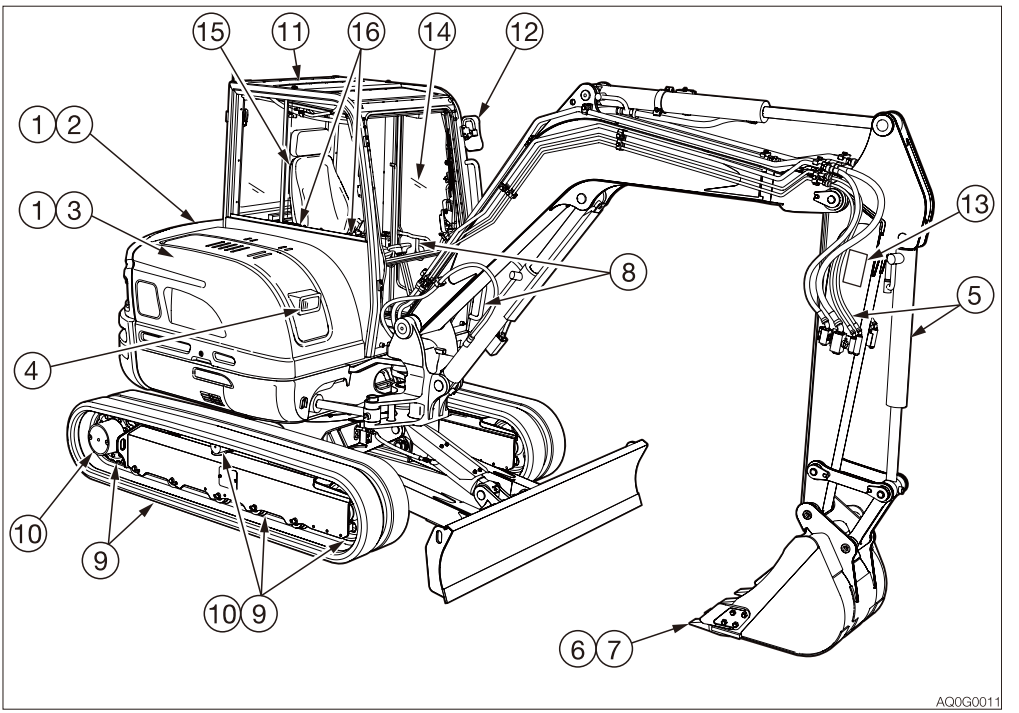

INSPECTING BY OPENING THE ENGINE HOOD AND COVERS

1. Check for any twigs, leaves, oil or other combustible materials around the engine and battery.
2. Check for oil or engine coolant water leakage around the engine.
3. Check for oil leakage from the hydraulic oil tank, hydraulic devices, hoses or connections.

INSPECTING BY WALKING AROUND THE MACHINE

4. Check lights for dirt, damage and burnt out bulbs.
5. Check attachments and hoses for damage.
6. Check the bucket, bucket teeth and side cutter for wear, damage and looseness.
7. Check the hook, slip stopper and hook mount of buckets with hooks for damage. (Option)
8. Check the handrail, the steps and the slip-resistant surfaces for damage and loose bolts.
9. Check the crawlers, carrier rollers, track rollers, idlers and sprockets for damage, wear and loose bolts.
10. Check for oil leakage from the travel motor, carrier rollers, track rollers and idlers.
11. Check the cab and guard for damage and loose nuts and bolts.
12. Check the mirrors for dirt or damage, and adjust them.
13. Check the labels for dirt and damage.

INSPECTING WHILE SITTING IN THE OPERATOR'S SEAT

14. Check the windshield for dirt or damage.
15. Check the seat and seat belt for dirt or damage.
    Check the operator's seat for dirt, oil or other combustible materials.
16. Check the monitor, instruments and switches for dirt or damage.

DAILY INSPECTION (EVERY 10 HOURS)

Perform the following inspections every day before starting the engine for the first time.

⚠ WARNING

- **Before operating, perform the daily inspections and make repairs immediately where necessary.**
- **Be sure to secure the engine hood or cover before working the inside. Do not keep the hood or cover open on a windy day or if the machine is parked on a slope.**

INSPECTING AND REPLENISHING THE COOLANT

⚠ WARNING

- **Do not remove the radiator cap or the drain plug when the cooling water is hot. Stop the engine and wait until the engine and the radiator cool before slowly loosening the radiator cap and the drain plug to remove them.**
- **Always wear the protective goggle and gloves when handling coolant (antifreeze). If any coolant (antifreeze) comes in contact with eyes or skin, wash it off with clean water. Otherwise, it could result in injures.**

Inspection

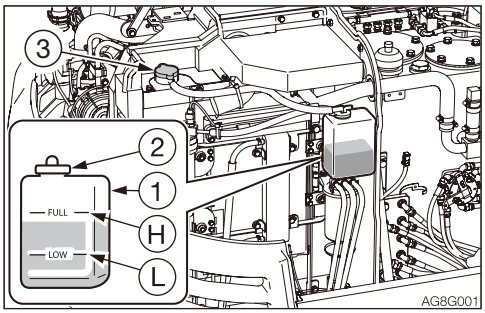

1. Open the engine hood.
2. Inspect the cooling water level in the reserve tank (1).
   The level should be between the upper limit (H) and the lower limit (L).
   If it is below the lower limit (L), replenish.

Replenishing

1. Remove the cap (2) of the reserve tank (1).
2. Add cooling water up to the upper limit (H) of the reserve tank (1).
   If the reserve tank (1) is found empty at the inspection, check for water leakage and then the water level in the radiator (3). Add water to the radiator (3) as required, and then to the reserve tank (1).
3. Install the cap (2).

Note: Use only clean water (soft water), such as tap water, to replenish the coolant loss due to evaporation. If the coolant loss is due to leakage, replenish the mixture of antifreeze and clean water (soft water) prepared using the same mixing ratio used for the current coolant.

INSPECTING AND REPLENISHING THE ENGINE OIL

⚠ WARNING

Stop the engine and allow the machine to cool down before performing maintenance.

Inspection

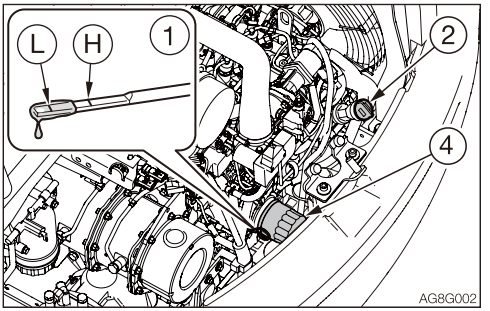

1. Open the engine hood.
2. Take out the dipstick (1) and wipe the oil off with a rag.
3. Fully reinsert the dipstick (1), and then pull it back out.
4. Check the oil on the dipstick (1).
   The level should be between the upper limit (H) and the lower limit (L).
   If it is below the lower limit (L), replenish.

Replenishing

1. Remove the oil filler cap (2).
2. Add oil up to between the upper limit (H) and the lower limit (L) of the dipstick (1). Problems could arise if the oil level is either too low or too high.
3. Tighten the oil filler cap (2).
4. Start the engine, run it at low idle for about 5 minutes, then stop it.
5. After about 10 to 20 minutes, inspect the oil level.

INSPECTING THE WATER SEPARATOR

⚠ WARNING

- **Do not smoke or permit open flames while handling fuel or working on the fuel system.**
- **Stop the engine in a well-ventilated place and allow it to cool down before performing maintenance.**
- **Clean up spilled fuel immediately.**

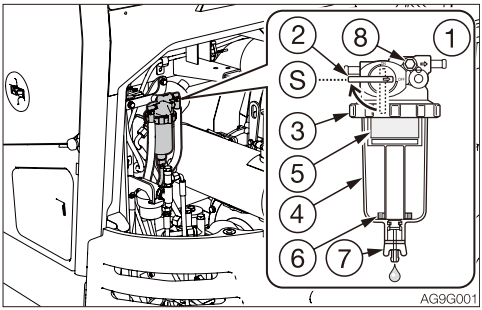

1. Open the engine hood.
2. Check if there is water in the water separator (1).
   If water collects in the separator, the float (red ring) (6) goes up. Be sure to drain water before the float goes up to the element (5),
3. Loose the vent plug (8) and then the drain plug (7) to discharge water collected inside.
4. After drainage of water, tighten each plug and bleed air from the fuel system.
   Refer to “Bleeding air from the fuel system” on page 6-9.

INSPECTING THE FUEL LEVEL

⚠ WARNING

- **Do not smoke or permit open flames while handling fuel or working on the fuel system.**
- **Never remove the fuel cap or add fuel when the engine is running or still hot. Do not spill fuel on the hot surface of the machine.**
- **Fill the fuel tank in a well ventilated place.**
- **Clean up spilled fuel immediately.**
- **Do not fill the fuel tank to capacity. Allow room for oil expansion.**
- **Securely tighten the fuel filler cap.**
- **Use the correct grade of fuel for the operating season.**

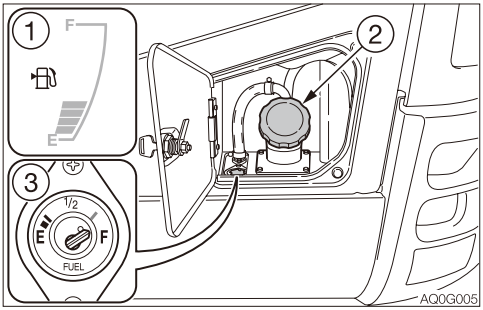

1. Check the fuel level using the fuel gauge (1).
   F: Tank is full.
   E: Tank is empty.
2. If the fuel level is low, open the fuel lid.
3. Add fuel from the fuel filler port (2) while watching the sight gauge (3).
   Refer to “Fuel filler port” on page 2-8.

INSPECTING THE HYDRAULIC OIL TANK LEVEL AND REPLENISHING

⚠ WARNING

Oil may spurt out if caps or filters are removed or pipes are disconnected before releasing the pressure in the hydraulic system.

- **Press the air breather button to relieve the internal pressure from the tank.**

Inspection

The oil level changes with the oil temperature. Inspect the oil by maintaining the machine at posture shown in the figure at the next.

- Machine posture for inspecting the hydraulic oil level

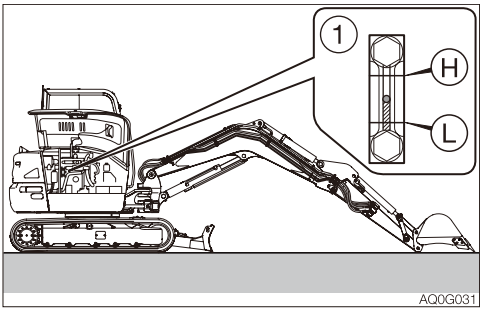

1. Start the engine and run it at low speed.
2. Fully retract the cylinders (arm and bucket), and lower the bucket to the ground.
3. Lower the dozer blade, and then stop the engine.
4. Open the right side cover.
5. Inspect the oil level using the sight gauge (1).
   - When the oil temperature is about 20°C (68°F):
     The level should be between the upper limit (H) and the lower limit (L).
     If it is below the lower limit (L), replenish.
   - When the oil temperature is about 50 to 80°C (122 to 176°F):
     The level should be slightly below the upper limit (H).

Replenishing

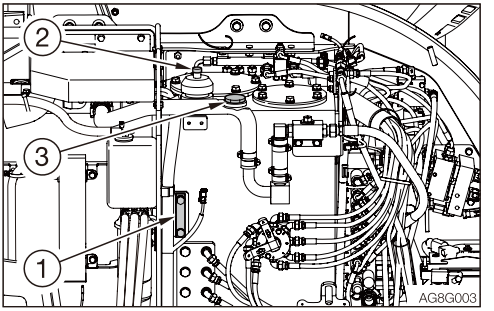

IMPORTANT: Do not fill up to the level higher than the upper limit (H). It will damage the hydraulic circuits or result in oil spurting. If accidentally done, stop the engine and wait the hydraulic oil to cool, and then let the excessive oil to drain from the drain plug.

1. Open the right side cover.
2. Press the air breather button (2) to relieve the internal pressure from the tank.
3. Remove the plug (3).
4. Add the hydraulic oil up to the middle point of the sight gauge (1).
5. Tighten the plug (3).

LUBRICATING THE WORKING EQUIPMENT

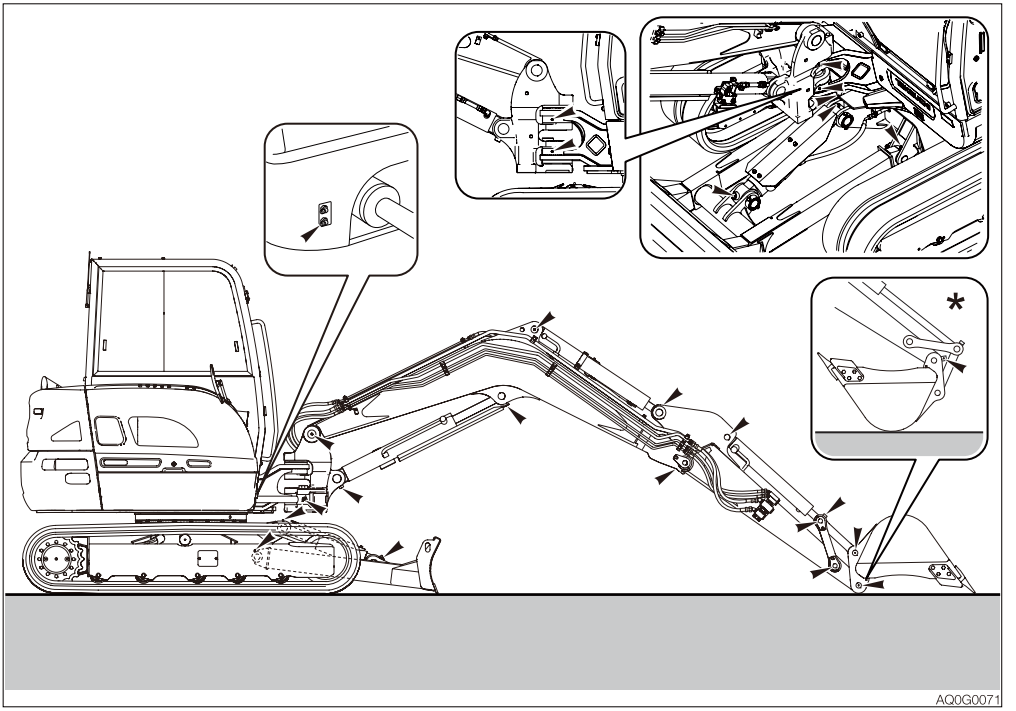

*: for USA

1. Keep the machine configuration as shown in the diagram above, lower the working equipment to the ground, and then stop the engine.
2. Use the grease gun to lubricate the grease fittings.
3. Wipe off the excess grease.

AFTER THE INITIAL 50 HOURS (ONLY FOR NEW MACHINES)

INSPECTING AND ADJUSTING THE FAN BELT

⚠ WARNING

Stop the engine and allow the machine to cool down before performing maintenance.

- **The engine, muffler, radiator, hydraulic lines, sliding parts and many other parts of the machine are hot immediately after the engine is stopped. Touching these parts will cause burns.**

IMPORTANT: The loose belts could result in bad battery charge, overheat of engine or early wear of belt. Too tight belts could damage the water pump or bearing and belt used to drive the alternator.
IMPORTANT: Do not let any oil or grease get on the belt.

Inspection

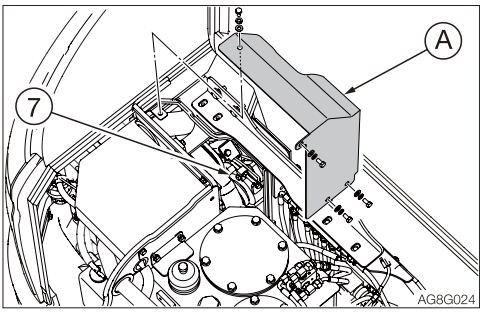

1. Open the right side cover.
2. Loosen the bolts and remove the cover (A).

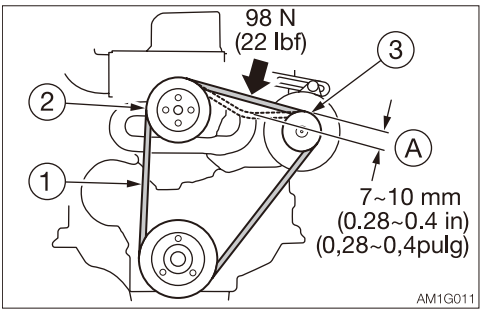

3. Press the fan belt (1) at the midpoint between the fan pulley (2) and alternator pulley (3) to check the tension (approx. 98 N or 22 lbf).
   The slack (A) should be 7 to 10 mm (0.28 to 0.4 in).
4. Inspect the fan belt (1) and replace if it is as follows.
   · There are cuts or cracks.
   · The belt is worn and touches the bottom of the V groove in the pulley.
   · The belt stretched too loose to be adjusted.

Adjustment

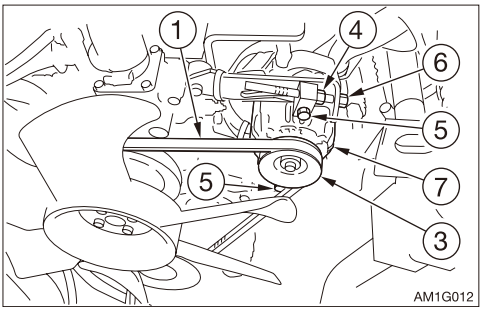

1. Loosen the bolt (5) and locking nut (4).
2. Turn the adjustment bolt (6) to move the alternator (7) and to adjust the tension of the fan belt (1).
   · Tighten: Clockwise
   · Loosen: Counterclockwise
3. Tighten the bolt (5) and locking nut (4).

Note: When replacing with a new belt, run the engine at low idle speed for about 3 to 5 minutes to break in the new belt, before adjusting the tension.

INSPECTING AND ADJUSTING THE COMPRESSOR BELT (AC)

⚠ WARNING

- **Stop the engine and allow the machine to cool down before performing maintenance.**
  - **The engine, muffler, radiator, hydraulic lines, sliding parts and many other parts of the machine are hot immediately after the engine is stopped. Touching these parts will cause burns.**
- **The high-pressure pipes of the air conditioner can be very hot (80 to 120°C or 176 to 248°F). Be careful not to burn yourself.**

IMPORTANT: Do not let any oil or grease get on the belt. It will cause the belt to slip, decrease the cooling capacity or shorten the service life of the air conditioner.

If the belt is too slack, it will slip and vibrate, resulting in decreased cooling capacity. The service life of the air conditioner also will be shortened. Adjust the belt tension to the standard value.

Inspection

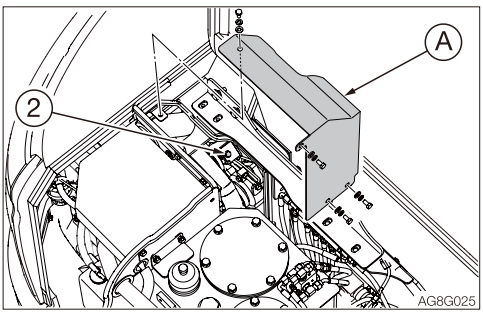

1. Open the right side cover.
2. Loosen the bolts and remove the cover (A).

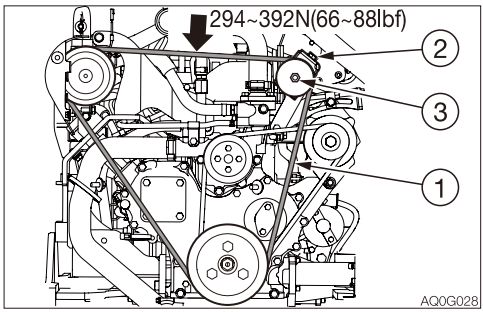

3. Measure the belt (1) tension using the belt tension gauge. The belt tension is normal if the belt tension gauge indicates the following values.
   294 to 392 N or 66 to 88 lbf.

Adjustment

If the belt tension is not normal, adjust it with the adjuster bolt (2).

1. Loosen the locking nut (3).
2. Turn the adjuster bolt (2) as follows.
   - Tighten: Clockwise
   - Loosen: Counterclockwise
3. Tighten the locking nut (3) after adjustment.
   Tightening torque:
   - Locking nut (3) 31.4 to 45.1 N·m (23.2 to 33.3 ft-lb.)

Note: When replacing with a new belt, run the engine at low idle speed for about 3 to 5 minutes to break in the new belt, before adjusting the tension again.

Replacing

Replace the belt in the following cases:

- There are cuts or cracks.
- The belt is worn and touches the bottom of the V groove in the pulley.
- The belt stretched too loose to be adjusted.

EVERY 50 HOURS

INSPECTING AND ADJUSTING THE CRAWLER TENSION

⚠ WARNING

- **If you must work beneath the raised machine or working equipment, always use wood blocks, jack-stands or other rigid and stable supports. Never get under the machine or working equipment if they are not sufficiently supported. This procedure is especially important when working on hydraulic cylinders.**
- **Be careful with the high-pressure grease In the track adjuster, the grease has been injected under high pressure. If the tension is adjusted without following the prescribed procedure, the grease discharge valve may fly off, resulting in injury.**
  - **Never loosen the grease fitting.**
  - **Loosen the grease discharge valve slowly. Do not turn it more than one turn.**
  - **Do not put your face, arms, legs or body in front of the grease discharge valve.**
  - **If grease does not come out when the grease discharge valve is loosened, the valve is faulty. Ask a Takeuchi service agent for repair.**

Inspection

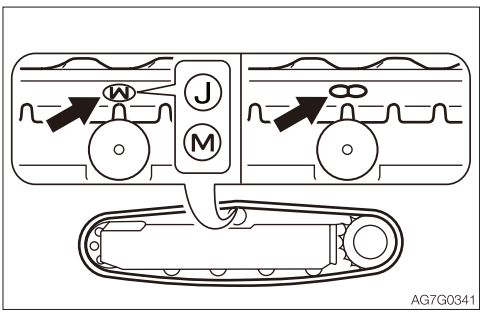

1. For rubber crawlers, move the machine so that the “M”, “J” or “∞” mark at the joint is at the top center of the crawler frame.

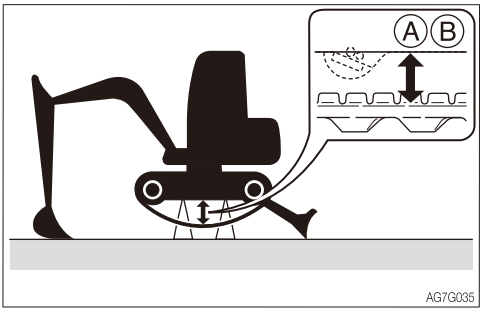

2. Use the working equipment to lift the machine body. Operate the levers slowly.

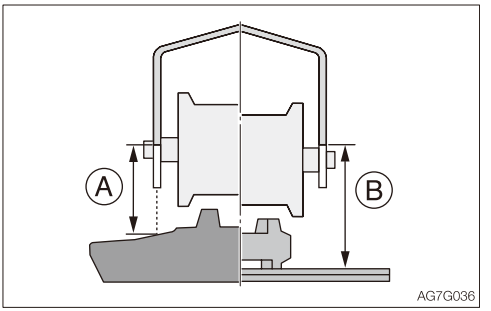

3. Inspect the gap (A or B) between the bottom surface of the frame at the center of the crawler frame and the top surface of the crawler.
   The gap (A or B) must be within the following range:

   (A) Rubber crawler
   77 to 87 mm (3.0 to 3.4 in.)
   (B) Steel crawler
   144 to 154 mm (5.7 to 6.1 in.)
   (B) Rubber pads
   144 to 154 mm (5.7 to 6.1 in.)

Adjustment

Increasing the tension

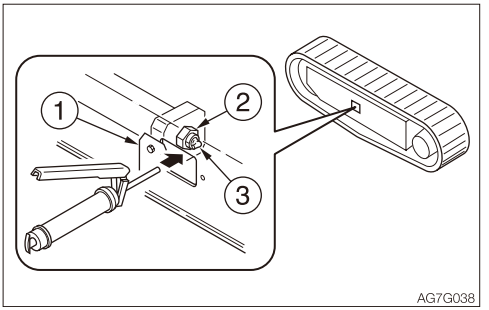

1. Remove the cover (1).
2. Using the grease gun, insert grease through the grease fitting (3) in the grease discharge valve (2).
3. Inspect the crawler tension.

Decreasing the tension

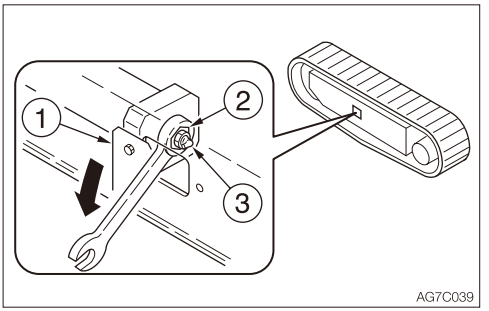

1. Remove the cover (1).
2. Using the spanner, slowly loosen the grease discharge valve (2) (one turn) and drain the grease.
   If the grease does not drain easily, move the machine forward or backward.
3. Tighten the grease discharge valve (2).
   · Tightening torque: 59 to 88 N·m (43.5 to 64.9 ft-lb.)

LUBRICATING THE SLEW BEARING

⚠ WARNING

Do not slew while lubricating. Doing so is dangerous, as you may get caught in the machine.

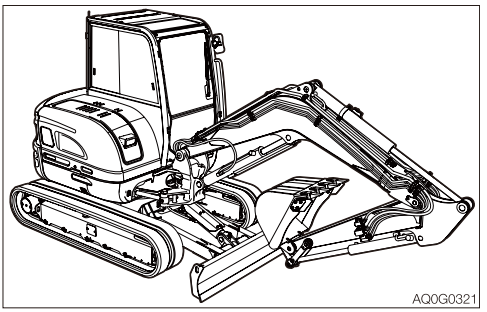

1. Stop the engine with the machine in the posture shown on the figure above.

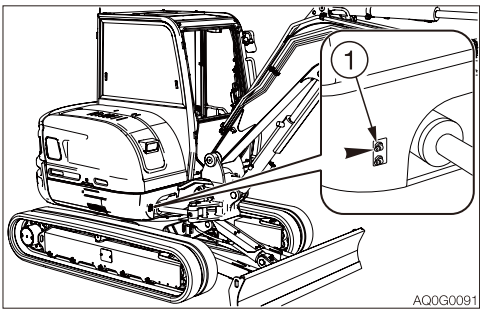

2. Use the grease gun to grease the grease fitting (1).

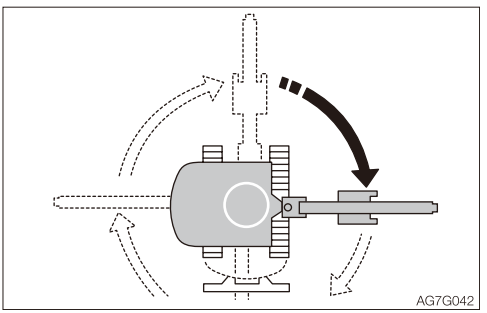

3. Start the engine, lift the bucket and slew clockwise 90°.
4. Lower the bucket to the ground, and then stop the engine.
5. Repeat the steps 2 to 4 above three times.
6. Wipe off the grease expelled from the slew bearing and grease fitting.

DRAINING THE WATER FROM THE FUEL TANK

⚠ WARNING

- **Do not smoke or permit open flames while handling fuel or working on the fuel system.**
- **Never remove the fuel cap or add fuel when the engine is running or still hot. Do not spill fuel on the hot surface of the machine.**
- **Fill the fuel tank in a well ventilated place.**
- **Do not fill the fuel tank to capacity. Allow room for oil expansion.**
- **Clean up spilled fuel immediately.**
- **Securely tighten the fuel filler cap.**
- **Use the correct grade of fuel for the operating season.**

Do the draining operation before starting the machine.

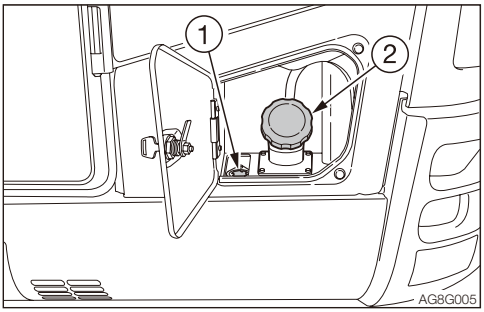

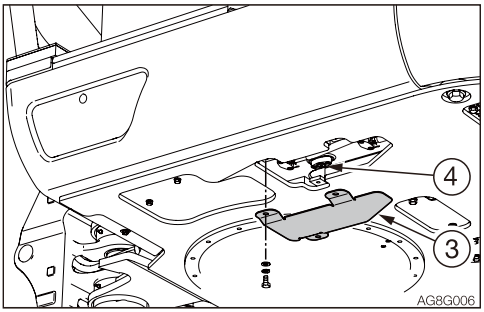

1. Open the fuel lid.
2. Remove the fuel filler cap (2).
3. Loosen the bolts and remove the under cover (3).
4. Place a pan under the drain plug (4).
5. Remove the drain plug (4), and then drain the water and sediment buildup in the bottom of the tank.
6. Tighten the drain plug (4).
7. Install the under cover (3).
8. Add fuel while watching the sight gauge (1).
9. Tighten the fuel filler cap (2).
10. Close the fuel lid and lock it with the key.
11. Bleed air.

Bleeding air from the fuel system

Refer to “Bleeding air from the fuel system” on page 6-9.

Note: Air in the fuel system causes the engine to fail to start or to have problems. Bleed air when the fuel tank is emptied, using the same procedure above.

INSPECTING THE BATTERY

⚠ DANGER

- **Do not use or charge the battery when the battery indicator is white. The battery is at its end of life. Immediately replace the battery.**
- **Batteries generate flammable hydrogen gas which may explode. Keep away from flame, sparks, fire or lighted cigarettes.**
- **Use a dampened cloth to clean the battery indicator and check the fluid level. Do not clean with a dry cloth; it can cause static electricity to build up, resulting in ignition or explosion.**
- **Do not use the cable if it's connecting terminal is loose or corroded. If used, ignition or explosion may occur.**

⚠ WARNING

- **Wear protective goggle and clothing when working with batteries.**
- **Do not tilt the battery. Doing so could cause the battery fluid to leak out of the exhaust hole. If contacted, it may cause skin irritation or the machine part corrosion.**
- **Batteries contain sulfuric acid which will damage eyes or skin if contacted.**
  - **If eye contact occurs, flush immediately with clean water and get prompt medical attention.**
  - **If accidentally swallowed, drink large quantities of water or milk and call a physician immediately.**
  - **If acid contacts skin or clothing, wash off immediately with a lot of water.**

Inspection

Turn the starter switch to ON and check the battery voltage on the display. The battery is normal if the voltage is 12 V or more.
Refer to "(5) Data display" on page 2-27 or "Data screen (DATA)" on page 2-39.

Note: Under normal operating conditions, the maintenance-free battery does not require addition of water because of the special plate designed to minimize fluid loss.

1. Open the right side cover.

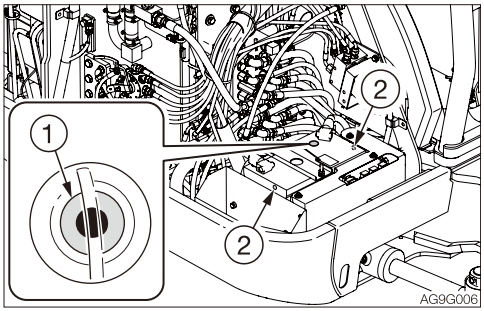

2. Inspect the indicator (1).
   - Green : Good
   - Black : Charging needed
   - White : Replace the battery
3. Check the battery terminal for looseness, dirt and corrosion.
4. Check the exhaust holes (2) for dirt.
5. Check the battery voltage. Confirm it is 12 V or more.
   Refer to "(5) Data display" on page 2-27 or "Data screen (DATA)" on page 2-39.

EVERY 100 HOURS

CLEANING THE WATER SEPARATOR

⚠ WARNING

- **Do not smoke or permit open flames while handling fuel or working on the fuel system.**
- **Stop the engine in a well-ventilated place and allow it to cool down before performing maintenance.**
- **Clean up spilled fuel immediately.**

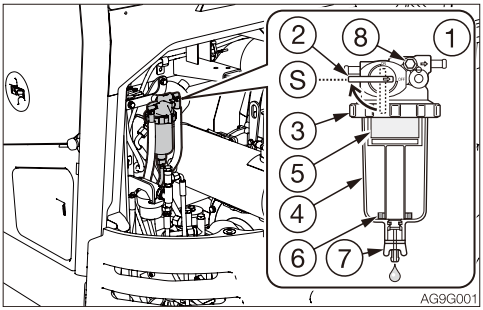

(S): Close

1. Open the engine hood.
2. Close the valve (2).
3. Loosen the ring (3), then remove the case (4), element (5) and indicator ring (6) and clean them.
4. Inspect the O-ring and the element (5). If there are any scratches or other irregularities, replace them.
5. Assemble the indicator ring (6), case (4) and element (5) and tighten the ring (3).
6. Open the valve (2).
7. Loosen the vent plug (8) and bleed the air.
8. Tighten the vent plug (8).
   Refer to “Bleeding air from the fuel system” on page 6-9.

AFTER THE INITIAL 250 HOURS (ONLY FOR NEW MACHINES)

REPLACING THE HYDRAULIC OIL RETURN FILTER

⚠ WARNING

- Stop the engine and allow each part of the machine to cool down before performing maintenance.
  - The engine, the hydraulic system and many other parts of the machine are hot immediately after the engine is stopped. Touching these parts will cause burns.
  - The hydraulic oil is also hot and under high pressure immediately after the engine is stopped.
    Be careful not to touch the oil when loosening the cap or plug. Working on the machine under these conditions could result in burns or injuries due to the hot oil spurting out.
- Oil may spurt out if caps or filters are removed or pipes are disconnected before releasing the pressure in the hydraulic system.
  - Press the air breather button to relieve the internal pressure from the tank.
  - When removing plugs or screws, or when disconnecting hoses, stand to the side and loosen them slowly to gradually release the internal pressure before removing.

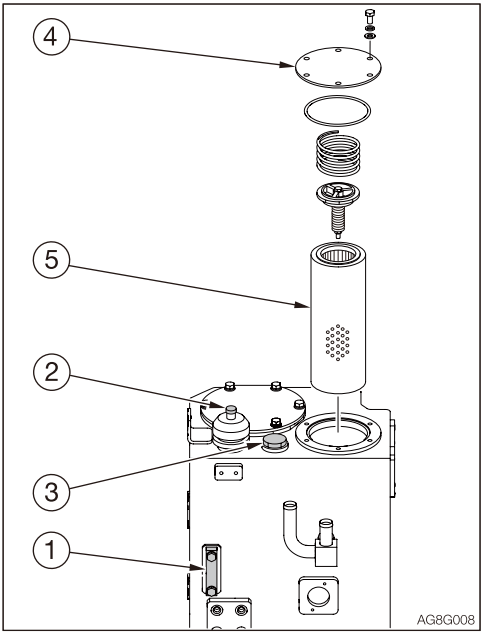

1. Open the right side cover.
2. Press the air breather button (2) to relieve the internal pressure from the tank.
3. Loosen the bolts and remove the flange (4).
4. Remove the return filter (5).
5. Install a new return filter.
6. Install the flange (4) on its original position.
7. Inspect the level with the sight gauge (1), and replenish if the level is too low.
   Refer to “Inspecting the hydraulic oil tank level and replenishing” on page 5-22.

REPLACING THE PILOT LINE FILTER

⚠ WARNING

- **Stop the engine and allow each part of the machine to cool down before performing maintenance.**
  - **The engine, the hydraulic system and many other parts of the machine are hot immediately after the engine is stopped. Touching these parts will cause burns.**
  - **The hydraulic oil is also hot and under high pressure immediately after the engine is stopped. Be careful not to touch the oil when loosening the cap or plug. Working on the machine under these conditions could result in burns or injuries due to the hot oil spurting out.**
- **Oil may spurt out if caps or filters are removed or pipes are disconnected before releasing the pressure in the hydraulic system.**
  - **Press the air breather button to relieve the internal pressure from the tank.**
  - **When removing plugs or screws, or when disconnecting hoses, stand to the side and loosen them slowly to gradually release the internal pressure before removing.**

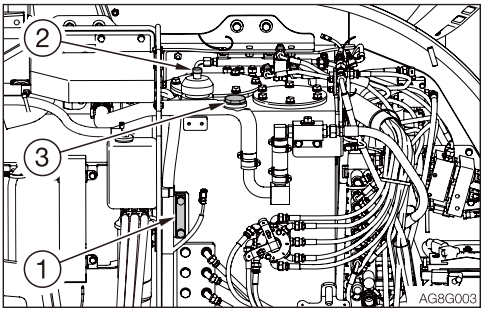

1. Open the right side cover.
2. Press the air breather button (2) to relieve the internal pressure from the tank.

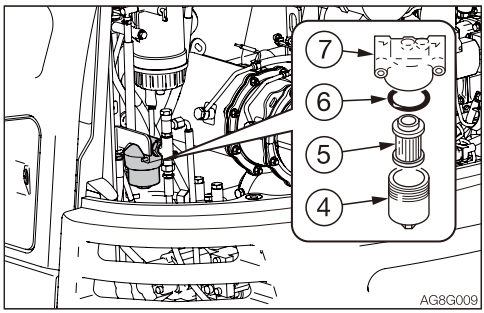

3. Open the engine hood.
4. Turn the case (4) counterclockwise and remove it.
5. Remove the element (5) and O-ring (6).
6. Clean the inside of the case (4).
7. Apply a thin layer of oil on the O-ring of the new filter.
8. Install the new element on the filter stand (7).
9. Apply a thin layer of oil on the new O-ring (6).
10. Install the new O-ring (6) and the case (4) on the filter stand (7).
11. Inspect the level with the sight gauge (1) and replenish if the level is too low.
    Refer to “Inspecting the hydraulic oil tank level and replenishing” on page 5-22.

REPLACING THE TRAVEL MOTOR GEAR OIL

⚠ WARNING

- **Stop the engine and allow the machine to cool down before performing maintenance.**
  - **The travel motor is hot immediately after the engine is stopped. Touching it will cause burns.**
  - **The gear oil is also hot and under high pressure immediately after the engine is stopped.**
    Be careful when loosening the plugs. Working on the machine under these conditions could result in burns or injuries.
- **The pressure in the reduction gear case of travel motor may cause oil or the plug to fly out. Loosen the plug slowly to release the pressure.**

IMPORTANT: If the percentage of the traveling time within the total operating time is high, replace the gear oil earlier than the specified time.

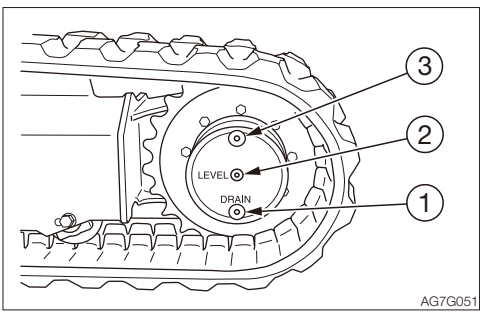

1. Set the travel motor so that plug (1) is at the very bottom.
2. Place a pan under the plug (1).
3. Remove the plugs (1), (2) and (3) and drain the oil.
4. Rewrap the plugs with new sealing tape.
5. Tighten the plug (1).
   - Plug (1) tightening torque: 46 to 51 N·m (34 to 37.6 ft-lb)
6. Add oil through the hole of the plug (3) until oil flows out of the hole of the plug (2).
7. Tighten the plugs (2) and (3).
   - Plug (2) tightening torque: 12 to 18 N·m (8.8 to 13.3 ft-lb)
   - Plug (3) tightening torque: 46 to 51 N·m (34 to 37.6 ft-lb)

EVERY 250 HOURS

INSPECTING AND ADJUSTING THE FAN BELT

Refer to “Inspecting and adjusting the fan belt” on page 5-24.

INSPECTING AND ADJUSTING THE COMPRESSOR BELT (AC)

Refer to “Inspecting and adjusting the compressor belt (AC)” on page 5-25.

CLEANING THE AIR CLEANER

⚠ WARNING

- **Stop the engine and allow the machine to cool down before performing maintenance.**
  - **The engine, muffler, radiator and many other parts of the machine are hot immediately after the engine is stopped. Touching it will cause burns.**
- **Wear required appropriate equipment such as protective goggle and filter mask when using compressed air, as metal fragments or other objects can fly and cause serious injury.**

IMPORTANT: Be careful not to scratch the element. Do not use an element if it is damaged.
IMPORTANT: When operating the machine in very dusty places, perform inspection and maintenance operations every day.
IMPORTANT: Be sure to install the element and dust cap securely. If not, dust could be drawn into the cylinder, damaging the engine.

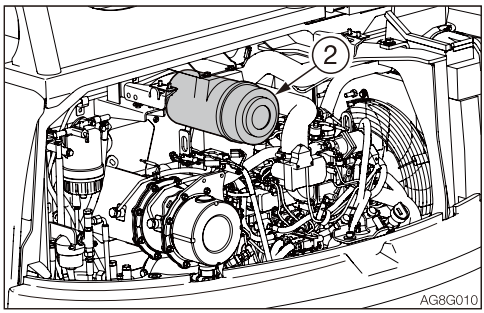

1. Open the engine hood.

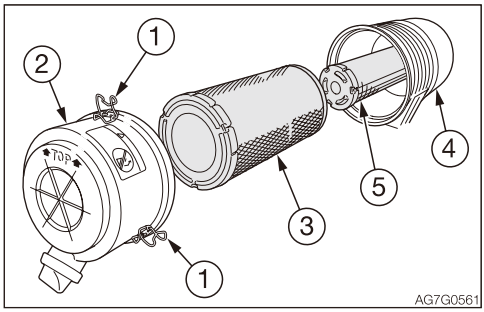

2. Loosen the clamps (1) and remove the dust cup (2).
3. Clean the inside of the dust cup (2).
4. Remove the primary element (3).
5. Cover the intake hole at the back of the body (4) with cloth or tape to prevent dirt from getting in.
   <If equipped with the secondary element>
   To prevent dirt from getting inside the engine, do not remove the secondary element (5).
6. Clean the inside of the body (4).

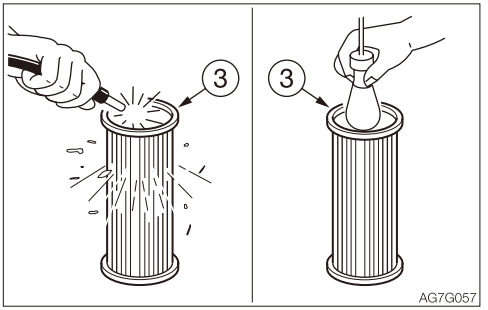

7. Clean the primary element (3) with dried compressed air (294 to 490 kPa or 43 to 71 psi).
   First blow the air from the inside of the element along the pleats. Then blow the air from the outside and finally from the inside again.
8. Light up the inside of the primary element (3) with a light bulb, inspect it, and replace it if there are small holes or thin spots.
9. Remove the cloth or tape applied in step 5.
10. Install the primary element (3).
11. Install the dust cup (2) with its " ⬆ TOP ⬆" mark facing, and then fasten it with the clamps (1).

CLEANING THE RADIATOR FINS AND THE OIL COOLER FINS

⚠ WARNING

Wear required appropriate equipment such as protective goggle and filter mask when using compressed air, as metal fragments or other objects can fly and cause serious injury.

IMPORTANT: Be careful not to damage the fins when cleaning.

- **When using compressed air or pressurized water, make sure the pressure is no higher than 200 kPa (28 psi) and hold the nozzle sufficiently away from the fins.**

IMPORTANT: When using water, cover the electrical system to prevent water from getting in.
IMPORTANT: When operating the machine in very dusty places, perform inspection and maintenance operations every day.

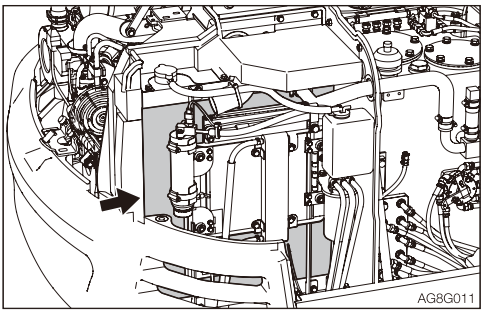

1. Open the engine hood and right side cover.

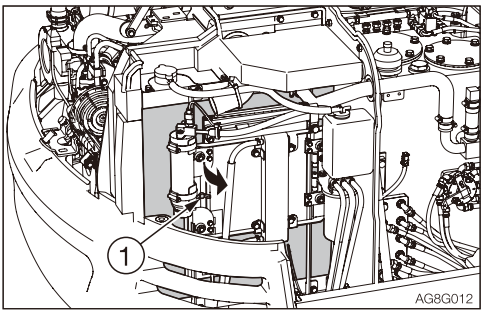

2. Remove the screws (1) and open the condenser.
3. Blow compressed air on the fins to remove mud and dirt stuck on them.