CLEANING THE AIR FILTER (AC)

⚠ WARNING

Wear required appropriate equipment such as protective goggle and filter mask when using compressed air, as metal fragments or other objects can fly and cause serious injury.

Clean the filter immediately after operating in dusty places.
If the filter is clogged, the air flow is reduced and a booming sound is heard from the air conditioner unit.

Removing the filter

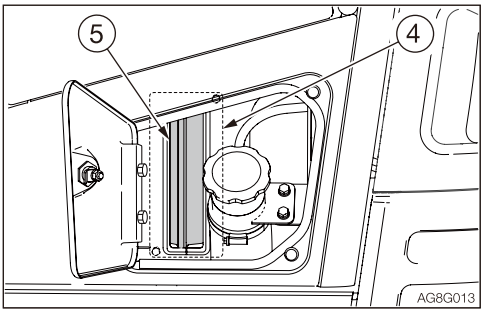

1. Open the fuel lid.
2. Loosen the screw and remove the cover (4).
3. Remove the filter (5).
4. Use compressed air or water to clean the filter, depending on how dirty it is.
   Filter (5) Part No. 19115-13680

Cleaning

1. Blow dry, compressed air (138 kPa or 20 psi or less) directly on the filter from the inside, moving up and down along the pleats.
   Be sure to keep the nozzle at an adequate distance from the filter.
2. Wash the filter with neutral detergent if it is very dirty. Dry the filter completely after washing it.

Replacing

Replace the filter with a new one once a year or if it is still clogged after blow-drying with compressed air and washing.

CLEANING THE CONDENSER (AC)

⚠ WARNING

Wear required appropriate equipment such as protective goggle and filter mask when using compressed air, as metal fragments or other objects can fly and cause serious injury.

IMPORTANT: Be careful not to damage the fins when cleaning.

- **When using compressed air or pressurized water, make sure the pressure is no higher than 200kPa (28 psi) and hold the nozzle sufficiently away from the fins.**

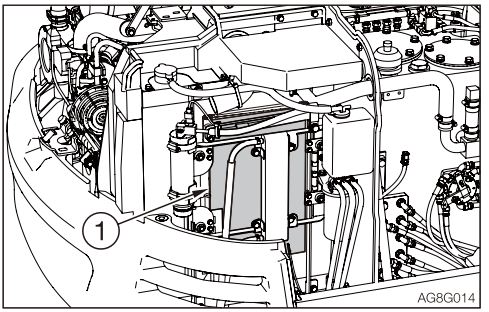

1. Open the engine hood and right side cover.
2. Clean the condenser (1).

INSPECTING THE REFRIGERANT (GAS) LEVEL (AC)

⚠ WARNING

- **Exposure of the eyes or hands to the cooler's refrigerant could result in blindness or frostbite.**
  Never touch the refrigerant or loosen the parts of the cooling circuit.
- **Keep flames away if the refrigerant gas is leaking.**
- **The high-pressure pipes of the air conditioner can be very hot (80 to 120°C or 176 to 248°F). Be careful not to burn yourself.**

The cooling capacity decreases if the amount of refrigerant is insufficient.
Inspect the refrigerant level using the sight glass (2) on the top of the receiver dryer (1).

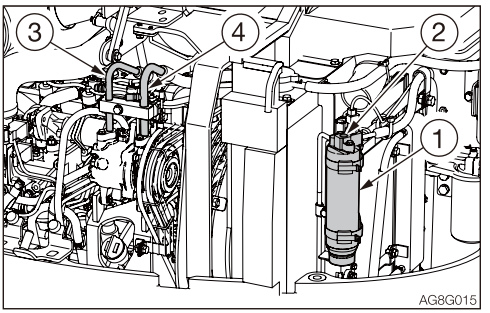

1. Open the engine hood.
2. Inspect the places for the conditions below.

Places for inspection	Conditions
Cab door	Fully open
Temperature control knob	Set fully to the COOL side
Fan speed	High
Ventilation/ Circulation select lever	Circulation
Engine speed	Maximum speed
Air conditioner switch	ON

3. Inspect the refrigerant by watching the flow of air bubbles through the sight glass (2).
   Refer to "Check list for refrigerant volume" on page 5-40.
4. Check the temperature of the compressor's high pressure pipe (3) and low pressure pipe (4).
   Refer to "Check list for refrigerant volume" on page 5-40.

Check list for refrigerant volume

Air conditioner	Normal	Abnormal		
High/low pressure pipe temperature	High pressure pipe is hot (80 to 120°C or 176 to 248°F), low pressure pipe is cold (8 to 15°C or 46 to 59°F). Clear difference in temperature between the pipes.	High pressure pipe is warm, low pressure pipe is slightly cool. No significant difference in temperature between the pipes.	Little difference in temperature between the high-pressure pipe and the low-pressure pipe.	High pressure pipe is hot, low pressure pipe is slightly cool. A significant difference in temperature between the pipes.
Pipe connection	Normal	Some places are dirty with oil.	Some places are extremely dirty with oil.	Normal
Sight glass	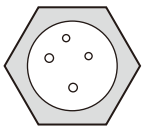 AG7G064	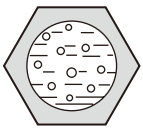 AG7G065	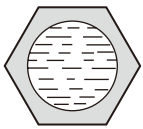 AG7G066	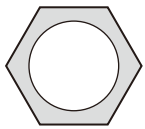 AG7G067
	Almost transparent with some bubbles. Fully transparent when the engine speed is increased or decreased.	Flow of bubbles can be seen constantly. Sometimes transparent or white with bubbles.	Mist-like flow is faintly visible.	No bubbles is visible, even when the fan is set to High and the engine is idling.
Refrigerant level	Proper level	Refrigerant may be leaking.	Refrigerant has leaked; little is left.	Refrigerant level too high

If the air conditioner is not working
If the air conditioner does not work well, set the fan switch to OFF and contact your sales or service dealer for inspection and/or repairs.

IMPORTANT: Continued use of the air conditioner when it is not working properly will damage its various parts.
IMPORTANT: Using the air conditioner when there is no refrigerant will damage the compressor.
IMPORTANT: Always consult your sales or service dealer for replacing the refrigerant. Be sure to use R134a refrigerant (630 to 710 g or 1.39 to 1.56 lb.).

EVERY 500 HOURS

REPLACING THE ENGINE OIL AND THE OIL FILTER

⚠ WARNING

Stop the engine and allow the machine to cool down before performing maintenance.

- **The engine, muffler, radiator, hydraulic lines, sliding parts and many other parts of the machine are hot immediately after the engine is stopped. Touching these parts will cause burns.**
- **The engine oil is also hot. Be careful not to touch the hydraulic oil when loosening the cap or plug. Working on the machine under these conditions could result in burns or injuries.**

Engine oil

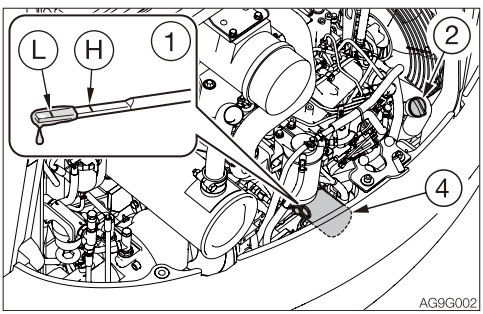

1. Open the engine hood and remove the oil filler cap (2).

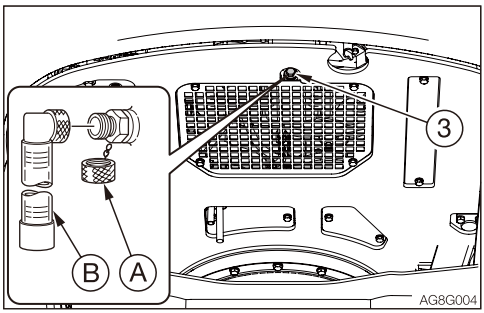

2. Place a pan for catching the waste oil under the drain plug (3).
3. Remove the drain plug (3) and drain the oil.
   <Equipped with drain valve>
   a. Remove the cap (A), install connector (B) and drain the oil. (The oil comes out when the screw is tightened.)
   b. Remove the connector (B) and install the cap (A).
4. Tighten the drain plug (3).

IMPORTANT: Check the waste oil for metal powder. If it contains large amounts of metal powder, consult your sales or service dealer.

Engine oil filter

5. Turn the filter (4) counterclockwise with the filter wrench and remove it.
6. Clean the surface of installation of the filter stand.
7. Apply a thin layer of oil on the packing of the new filter.
8. Install the new filter by hand.
9. Tighten one more turn (with the filter wrench) after the filter packing comes in contact with the surface of installation. (Torque when tightening with filter wrench: 19.6 to 23.5 N·m or14 to 17 ft-lb.)
10. Add oil up to between the upper limit (H) and the lower limit (L) of the dipstick (1). Problems could arise if the oil level is either too low or too high. It takes around 10 to 20 minutes for all of the added oil to go down to the oil pan.
11. Tighten the oil filler cap (2).
12. Start the engine, run it at low idle for about 5 minutes, then stop it.
13. After about 10 minutes, inspect the oil level.

Note: Change the engine oil and oil filter even if the running time is less than 500 hours after a year's time of operation. Or, change the engine oil and oil filter if the running time reaches 500 hours within a year's time of operation.

REPLACING THE FUEL FILTER

⚠ WARNING

- **Do not smoke or permit open flames while handling fuel or working on the fuel system.**
- **Stop the engine in a well-ventilated place and allow it to cool down before performing maintenance.**
- **Clean up spilled fuel immediately.**

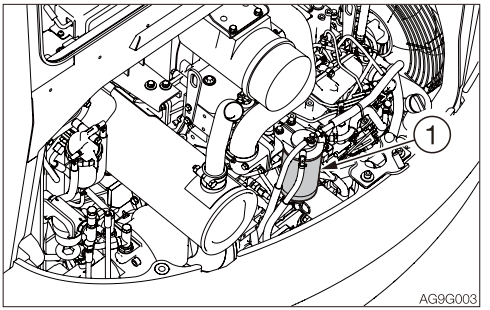

1. Open the engine hood.
2. Turn the filter (1) counterclockwise with the filter wrench and remove it.
3. Clean the surface of installation of the filter stand.
4. Apply a thin layer of oil on the packing of the new filter.
5. Install the new filter by hand.
6. Tighten one more turn after the filter packing comes in contact with the surface of installation. (Torque when tightening with filter wrench: 19.6 to 23.5 N·m or 14 to 17ft-lb.)
7. Bleed the air.
   Refer to “Bleeding air from the fuel system” on page 6-9.

INSPECTING THE SLEW PINION GEAR

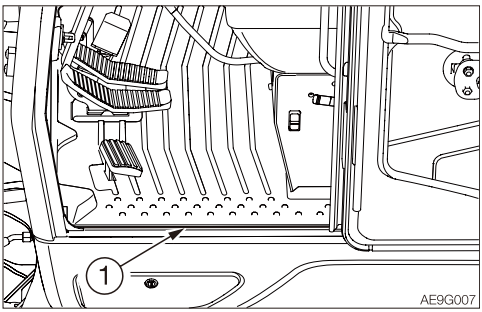

1. Remove the floor mat (1).

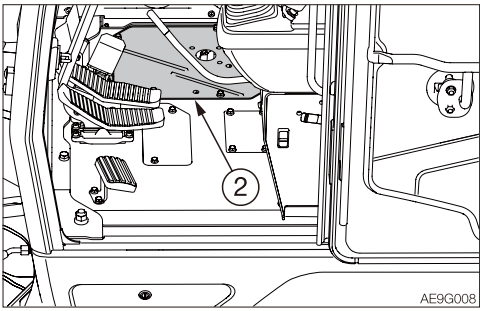

2. Remove the cover (2).

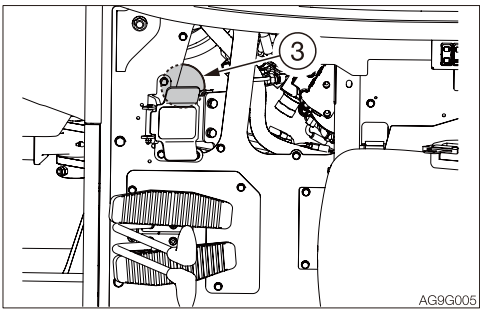

3. Remove the cap (3).
4. Make sure that the gear tooth surface of the slew bearing is well greased.
   If the surface is not adequately greased, add grease.
   If the grease has turned white due to water or mud entered it, replace the whole grease. Consult your sales or service dealer for help.
   Grease full capacity: 5.0 L (1.3 US gal) or 4.5 kg (10 lbs.)
5. Install the cap (3).
6. Install the cover (2).
7. Install the floor mat (1).

EVERY 1000 HOURS

REPLACING THE HYDRAULIC OIL RETURN FILTER

Refer to “Replacing the hydraulic oil return filter” on page 5-32.

REPLACING THE PILOT LINE FILTER

Refer to “Replacing the pilot line filter” on page 5-33.

REPLACING THE TRAVEL MOTOR GEAR OIL

Refer to “Replacing the travel motor gear oil” on page 5-34.

REPLACING THE AIR CLEANER ELEMENT

⚠ WARNING

Stop the engine and allow the machine to cool down before performing maintenance.

- **The engine, muffler, radiator and many other parts of the machine are hot immediately after the engine is stopped. Touching these parts will cause burns.**

IMPORTANT: Do not use an element if its pleats, gaskets or seals are damaged.
IMPORTANT: Be sure to install the element and dust cap securely. If not, dust could be drain into the cylinder, damaging the engine.

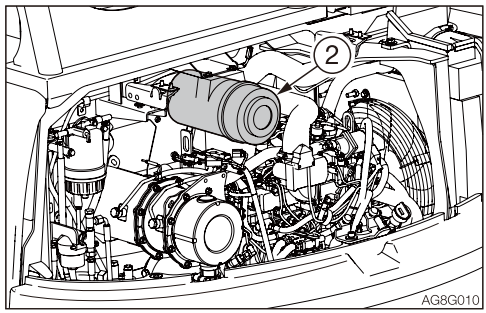

1. Open the engine hood.

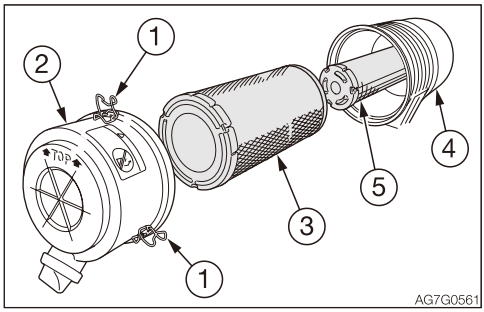

2. Loosen the clamps (1) and remove the dust cup (2).
3. Clean the inside of the dust cup (2).
4. Remove the primary element (3).
5. Cover the intake hole at the back of the body (4) with cloth or tape to prevent dirt from getting in.
   <If equipped with the secondary element>
   Do not yet remove the secondary element (5).
6. Clean the inside of the body (4).
7. Remove the cloth or tape applied in step 5.
   <If equipped with the secondary element>
   Remove the secondary element (5).
8. Install the new elements.
9. Install the dust cup (2) with its “⬆ TOP ⬆” mark facing up, and then fasten it with the clamps (1).

REPLACING THE AIR BREATHER FILTER

⚠ WARNING

Oil may spurt out if caps or filters are removed or pipes are disconnected before releasing the pressure in the hydraulic system.

- **Press the air breather button to relieve the tank pressure.**

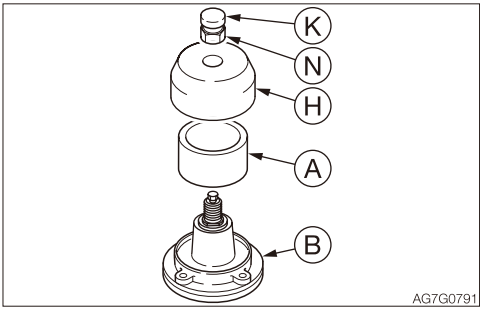

1. Open the right side cover.
2. Press the button (K) to relieve the internal pressure from the tank.
3. Remove the nut (N) on the air breather.
4. Remove the cover (H).
5. Replace the filter (A).
6. Install the cover (H) on the body (B).
7. Install the nut (N).

INSPECTING AND ADJUSTING THE ENGINE VALVE CLEARANCE

This operation requires experience. Ask your sales or service dealer for it.

EVERY 1500 HOURS

INSPECTING, CLEANING AND CHECKING OPERATION OF THE ENGINE FUEL INJECTORS

This operation requires experience. Ask your sales or service dealer for it.

INSPECTING THE CRANKCASE BREATHER SYSTEM

This operation requires experience. Ask your sales or service dealer for it.

EVERY 2000 HOURS

CLEANING THE ENGINE COOLING SYSTEM

Replace the coolant after the two-year operation even if the running time is less than 2000 hours.

⚠ WARNING

- **Stop the engine and allow the machine to cool down before performing maintenance.**
  - **The engine, muffler, radiator and many other parts of the machine are hot immediately after the engine is stopped. Touching these parts will cause burns.**
  - **The engine coolant is also hot and under high pressure immediately after the engine is stopped. Be careful when loosening the caps or plugs. Working on the machine under these conditions could result in burns or injuries due to the hot coolant spurting out.**
- **If maintenance must be performed with the engine running, always work as a two person team communicating each other.**
  - **One person must sit in the operator's seat so that he/she can immediately stop the engine when necessary. He/she must take care not to touch the lever or pedal unless necessary.**
  - **The one who performs maintenance must make sure to keep his/her body or clothing away from the moving part of the machine.**
- **Standing at the back of the machine while the engine is running is extremely dangerous, as the machine could move suddenly. Never stand at the back of the machine while the engine is running.**
- **Do not remove the radiator cap or the drain plug when the cooling water is hot. Stop the engine and wait until the engine and the cooling water cool. Then, slowly loosen the radiator cap and the drain plug to remove them.**

When cleaning, if the temperature of the coolant is low, the thermostat will be closed and the coolant will not circulate in the radiator. Heat the coolant water to at least 90°C (194°F) before cleaning.

1. Open the engine hood and the side cover.

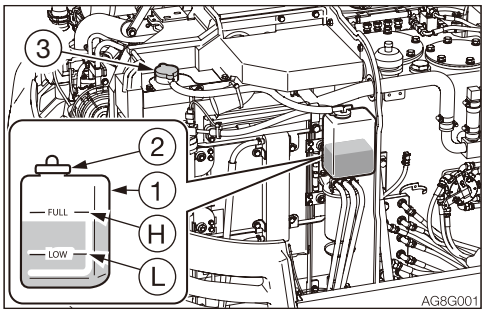

2. Gradually loosen the radiator cap (3) to release the internal pressure, and then remove the cap.

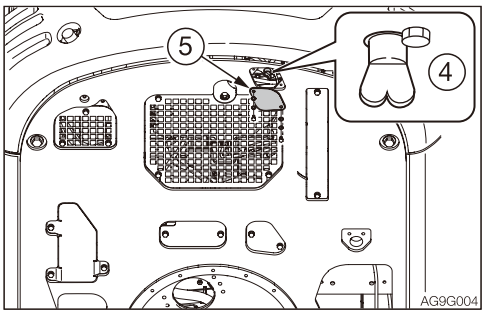

3. Loosen the bolts and open the cover (5).
4. Place a pan for catching the waste coolant under the drain plug (4), and then loosen the drain plug (4) to drain the coolant.
5. Tighten the drain plug (4).
6. Add tap water to the radiator through the coolant fill port up to the top of the port. Take time and slowly add water, so that no air enters the radiator.
7. Close the radiator cap (3).
8. Start the engine and run it at a speed slightly above low idling. Raise the water temperature to at least 90°C (194°F), and then run the engine for about 10 minutes with the thermostat open.

9. Stop the engine, wait until the cooling water temperature becomes lower, and then remove the drain plug (4) to drain the water.
10. After draining, clean the cooling system using a cleaning agent. When using the cleaning agent, follow the instructions included with the agent.
11. Repeat the steps 4 to 8 to rinse the cooling system.
12. Tighten the drain plug (4).
13. Take time and slowly add the new coolant (mixture of antifreeze and tap water) to the radiator through the fill port until it is full.
14. Close the radiator cap (3).
15. Warm up the engine. Use the meters to check that there are no irregularities in the cooling system at this time.
16. Increase the water temperature to at least 90°C (194°F). Then, run the engine for about 10 minutes with the thermostat kept open.
17. Stop the engine, wait until the cooling water temperature becomes lower, and then check the level of coolant in the radiator.
    If necessary, add cooling water until the radiator is full.
18. Close the radiator cap (3).
19. Clean the interior of the reserve tank (1), and then add coolant to the upper limit (H).
20. When the coolant has been replaced, inspect the coolant level once again after operating the machine.
    When the machine is operated, the coolant is distributed throughout the entire system, resulting in the lower coolant level.
    Add coolant up to the full level.

LAPPING THE ENGINE VALVE SEATS (IF NECESSARY)

This operation requires experience. Ask your sales or service dealer for it.

INSPECTING THE ACCUMULATOR (IF EQUIPPED)

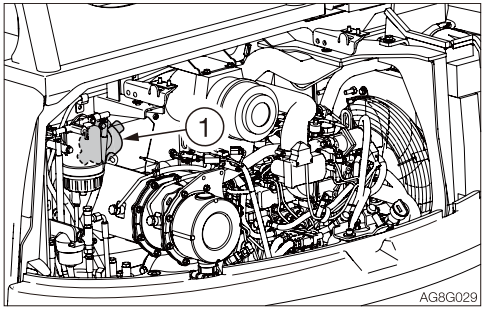

⚠ WARNING

- **High-pressure nitrogen gas is enclosed in the accumulator (1). If handled incorrectly, it could explode and cause serious injury. Strictly observe the following precautions:**
  - **Do not disassemble.**
  - **Do not allow flame nearby or throw it into a fire.**
  - **Do not drill, weld or fuse.**
  - **Do not subject it to physical shock such as hitting, rolling or dropping.**
  - **Before disposing of the unit, the sealed gas must be drained. Contact a Takeuchi sales or service dealer for help.**
- **Clear all personnel from the work area.**
- **Sound the horn to warn people around the machine.**

IMPORTANT: If the accumulator (1) fails, the boom cannot be lowered or the residual pressure in the hydraulic circuit cannot be released while the engine is stopped.

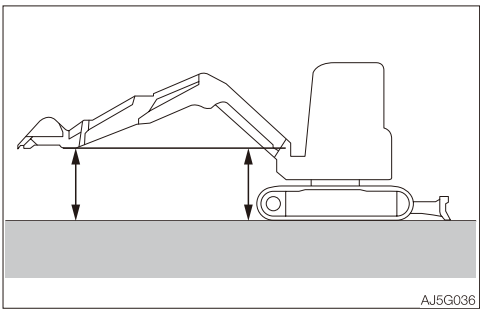

1. Start the engine, then fully retract the arm and bucket cylinders.
2. Operate the boom so that the tip of the arm is positioned at the bottom of the boom.

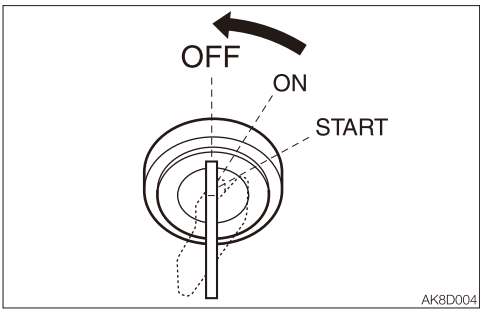

3. Turn the starter key to the OFF position to stop the engine.

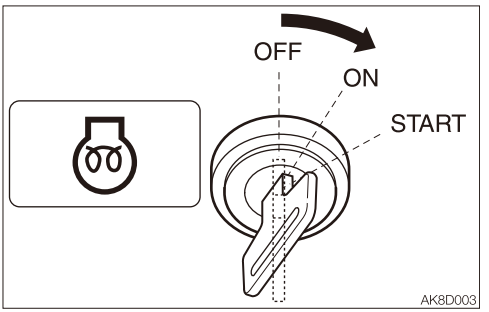

4. Turn the key to the ON position. (Do not start the engine.)

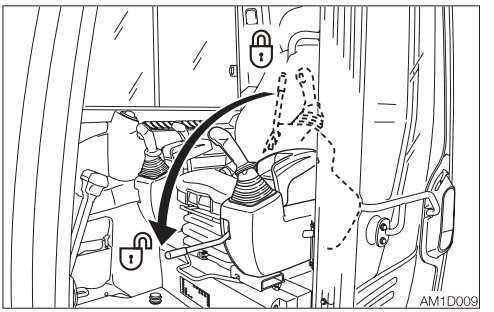

5. Fully lower the safety lock lever to disengage the lock.

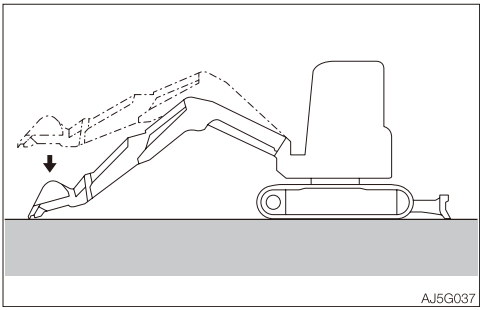

6. Lower the boom until the bucket contacts the ground.
   The machine is normal if the bucket is lowered to the ground. The accumulator (1) is probably faulty if the boom cannot be lowered or stops halfway. Consult a Takeuchi sales or service dealer for help.

Note: When the boom is lowered to lower the bucket to the ground, do it within 10 minutes of stopping the engine.

EVERY 3000 HOURS

INSPECTING THE TURBOCHARGER (BLOW WASH AS NECESSARY)

This operation requires experience. Ask your sales or service dealer for it.

EVERY 4000 HOURS

REPLACING THE HYDRAULIC OIL AND CLEANING THE SUCTION STRAINER

⚠ WARNING

- **Stop the engine and allow each part of the machine to cool down before performing maintenance.**
  - **The engine, the hydraulic system and many other parts of the machine are hot immediately after the engine is stopped. Touching these parts will cause burns.**
  - **The hydraulic oil is also hot and under high pressure immediately after the engine is stopped.**
    Be careful not to touch the oil when loosening the cap or plug. Working on the machine under these conditions could result in burns or injuries due to the hot oil spurting out.
- **Oil may spurt out if caps or filters are removed or pipes are disconnected before releasing the pressure in the hydraulic system.**
  - **Press the air breather button to relieve the internal pressure from the tank.**
  - **When removing plugs or screws, or when disconnecting hoses, stand to the side and loosen them slowly to gradually release the internal pressure before removing.**

1. Slew 60° clockwise and set the machine to the hydraulic oil level inspection posture.
   Refer to “Inspecting the hydraulic oil tank level and replenishing” on page 5-22.
2. Open the right side cover.

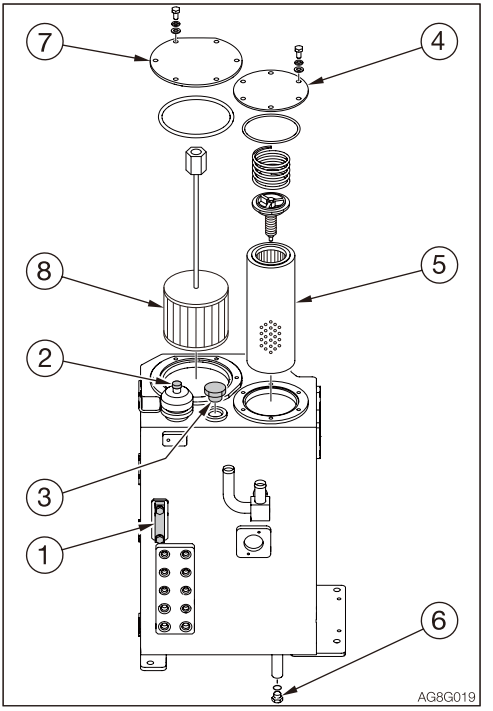

3. Press the button (2) to relieve the internal pressure from the tank.
4. Replace the air breather filter (A).
   Refer to “Replacing the air breather filter” on page 5-46.
5. Remove the plug (3).
6. Place a pan under the plug (6) to catch the waste oil.
7. Remove the drain plug (6), and then drain the hydraulic oil.
8. Loosen the bolts and remove the flange (4).
9. Remove the return filter (5).
10. Loosen the bolts and remove the flange (7).
11. Remove the suction strainer (8) and clean it.
12. Clean the inside of the hydraulic oil tank.
13. Tighten the drain plug (6).
14. Install the suction strainer (8) on the tank and then install the flange (7).

15. Install the new return filter (5) and the flange (4) on the tank.
16. Add hydraulic oil from the hole of plug (3) up to the level between the upper limit (H) and the lower limit (L) in the sight gauge (1).
17. Tighten the plug (3).
18. Bleed air from the hydraulic oil circuit following “Bleeding air” below.
19. Set the machine to the hydraulic oil level inspection posture and inspect the oil level after the oil cools.
    Refer to “Inspecting the hydraulic oil tank level and replenishing” on page 5-22.

Bleeding air

IMPORTANT: After replacing the hydraulic oil or hydraulic devices, or after performing maintenance of the hydraulic devices, bleed air from the hydraulic circuits and hydraulic devices. Failure to do so may damage the hydraulic devices.

• Hydraulic pump

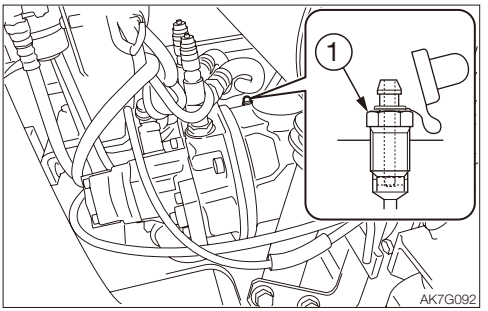

1. Open the engine hood.
2. Loosen the vent plug (1) on the hydraulic pump.
3. Once hydraulic oil overflows from the vent plug hole (1), tighten the vent plug (1).

• Cylinders

1. Start the engine, let it run at a low-idling speed for 10 minutes.
2. Maintain the engine at low idle, and then slowly extend and retract each cylinder 4 or 5 times, without letting them reach the stroke end.
3. While running the engine at high speed, slowly extend and retract each cylinder 4 or 5 times, without letting them reach the stroke end.
4. Return the engine speed to low idle, and then slowly extend and retract each cylinder 4 or 5 times to the stroke end.

- **Emergency shut-off valve (If equipped)**
  This operation is dangerous and requires experience. Ask your sales or service dealer for help.
  If air is not released, the working equipment could become slow in reacting to the operation of the operator and show unexpected behavior.

⚠ WARNING

When removing plugs or screws, or when disconnecting hoses, stand to the side and loosen them slowly to gradually release the internal pressure before removing.

1. Place a pan under the hose (A) or (B) to catch the waste oil.
2. Start the engine and run it at low idle.
3. Fully lower the safety lock lever to the unlock position.

Boom

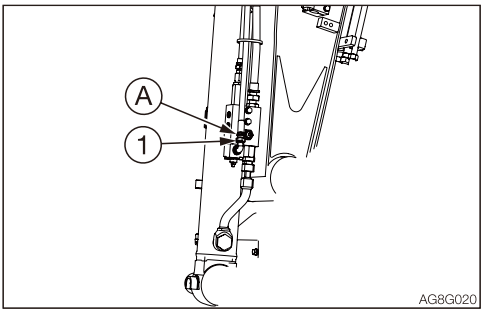

4. Hold the hose fitting (A) in place with a wrench and slowly loosen the hose nut (1).
5. Slowly move the boom in the “Boom lower” direction a little until there are no more air bubbles coming from the hose nut (1) joint.
6. Hold the hose fitting (A) in place with a wrench and tighten the hose nut (1).

Arm

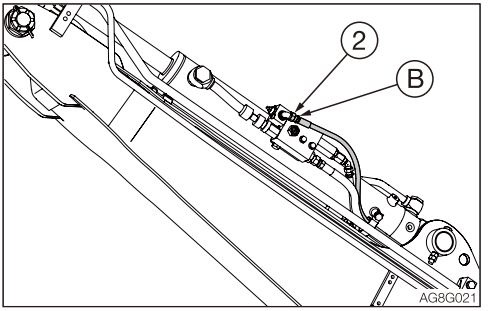

4. Hold the hose fitting (B) in place with a wrench and slowly loosen the hose nut (2).
5. Slowly move the arm in the “Arm lower” direction a little until there are no more air bubbles coming from the hose nut (2) joint.
6. Hold the hose fitting (B) in place with a wrench and tighten the hose nut (2).

WHEN REQUIRED

REPLACING THE BUCKET TEETH AND THE SIDE CUTTERS

Replace the bucket teeth and the side cutters when the tooth points or the side cutters are worn. Do not wait until the adapter or bucket is damaged.

⚠ WARNING

- **Before performing maintenance or repairs under the machine, lower all moveable working equipment to the ground or in the lowermost position.**
- **To prevent unexpected movement, firmly secure the working equipment when repairing or replacing the bucket teeth or side cutter.**
- **When using a hammer, pins may fly out or metal particles may be scattered. This may lead to serious injury.**
  - **If hard metal parts such as pins, bucket teeth, side cutter or bearings are hit with a hammer, wear protective gear such as safety goggles and gloves.**
  - **When hitting pins or bucket teeth, always check that there is no one in the surrounding area.**
- **Do not allow unauthorized personnel in the work area while working.**

• Bucket tooth <V13SY or V17S>
Removal

1. Clean the bucket and park the machine in a flat, safe place where the ground is hard.

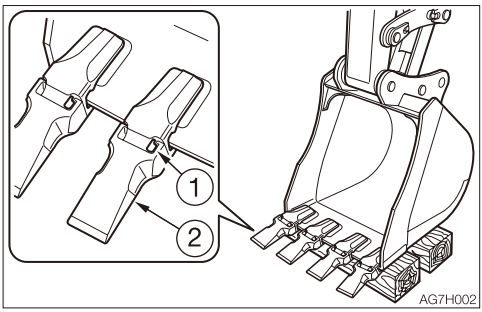

2. Set the bottom surface of the bucket flat and lower it on a block so that the locking pin (1) can be knocked out.
3. Remove the key, then check that the bucket is stable.

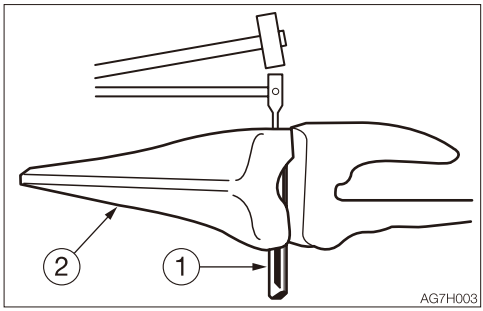

4. Place a rod against the locking pin (1) and knock the locking pin out by hammering against the rod.
   The rod should be round and thinner than the locking pin.

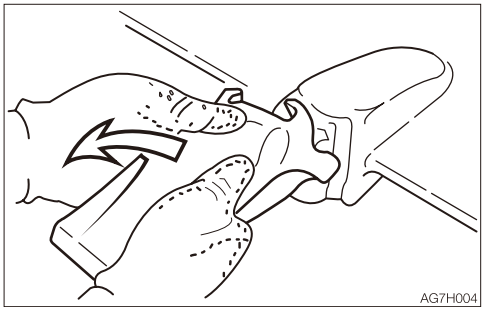

5. Remove the tooth point (2). Some tooth points (2) are of the type that are removed by turning (twisting) them counterclockwise.
   The same procedure can be used to remove the other tooth points.

Installation

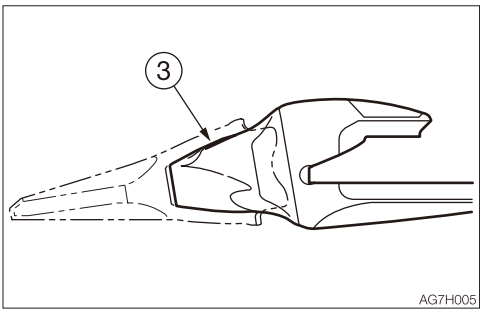

1. Clean the adapter nose (3). If there is gravel or mud on the adapter nose, the tooth point will not go in all the way and the pin cannot be driven in.

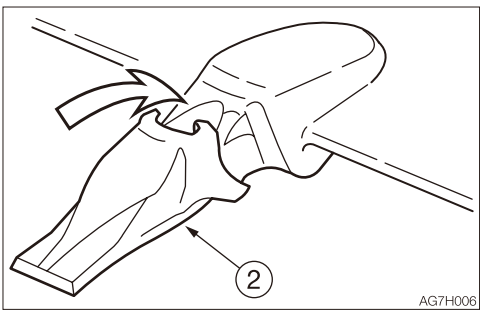

2. Put the tooth point (2) in the adapter nose (3).
   Push in firmly until the tooth point (2) touches the tip of the adapter nose(3).
   Some tooth points (2) are of the type that are installed by turning (twisting) them clockwise.

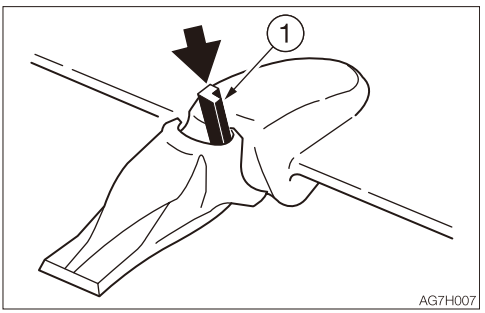

3. Insert the locking pin (1), making sure it is in the right direction.

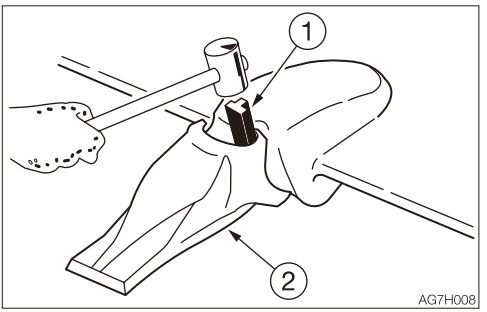

4. Drive in the locking pin (1) with a hammer until it is flush with the tip of the tooth point (2) ear.

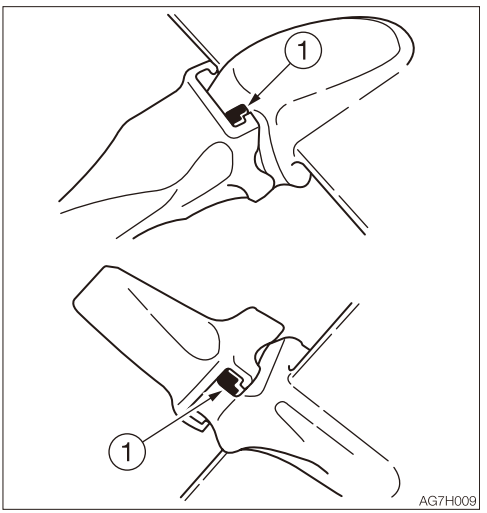

5. The locking pin (1) is now driven in.
   The same procedure can be used to install the other tooth points.

• Side cutter
Installation

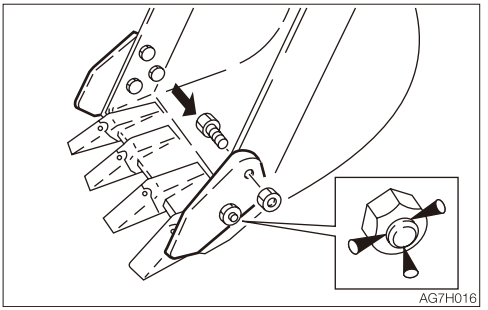

1. Insert the bolts from the inner of the bucket and tighten the side cutterwith nuts.
   Tightening torque: 241 N·m (178 ft-lb)
2. Caulk the bolts with a punch at three spots along the periphery of the screw to prevent the nuts from coming loose.

REPLACING THE BUCKET

⚠ WARNING

- Before performing maintenance or repairs under the machine, lower all working equipment to the ground or in the lowermost position.
- If maintenance must be performed with the engine running, always work as a two person team communicating each other.
  - One person must sit in the operator's seat so that he/she can immediately stop the engine when necessary. He/she must take care not to touch the lever or pedal unless necessary.
  - The one who performs maintenance must make sure to keep his/her body or clothing away from the moving part of the machine.
- When using a hammer, pins may fly out or metal particles may be scattered. This may lead to serious injury.
  - If hard metal parts such as pins, bucket teeth, side cutter or bearings are hit with a hammer, wear protective gear such as safety goggles and gloves.
  - When hitting pins or bucket teeth, always check that there is no one in the surrounding area.
- When aligning the pin holes, always do so by checking them visually. Do not insert your finger in the pin hole, or you could lose your finger.

Removing

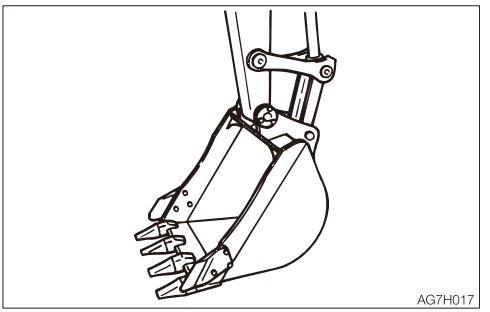

1. Lower the bucket to the ground as shown on the figure above in a stable position.

Note: When removing pins, set the bucket so that it is barely touching the ground. If the bucket is firmly touching the ground, the resistance will be great and it will be difficult to remove the pin.

2. Set the safety lock lever to the locked position and stop the engine.

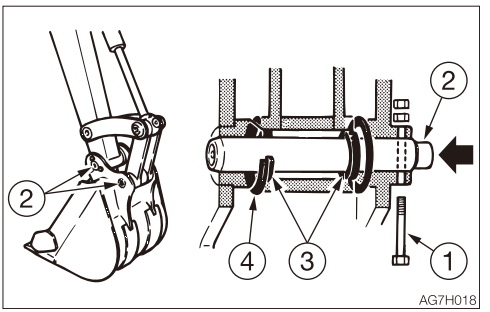

3. Remove the bolt (1).
4. Hammer the pin (2) out of the bucket.
5. Remove the bucket.
   Inspect the pin seal (3) and replace it if it is deformed or damaged. (See next page.)

Installation

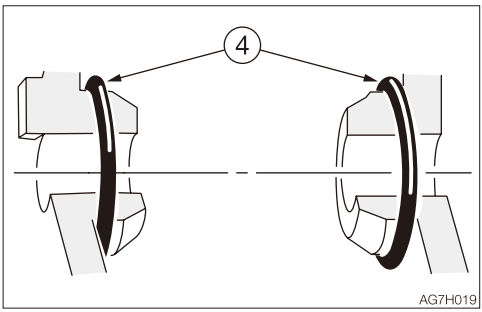

1. Set the O-ring (4) on the bucket as shown on the figure above.

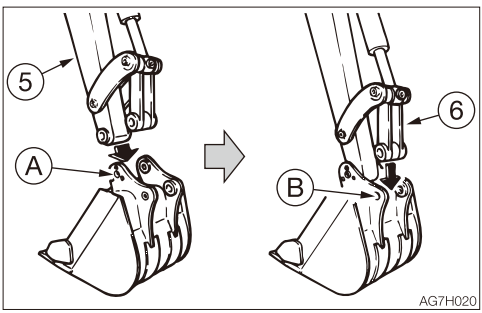

2. Align the pin hole (A) on the bucket with the pin hole on the arm (5), and install the pin (2).
3. Operate the cylinder, align the pin hole (B) on the bucket with the pin hole on the link arm (6), and install the pin (2).

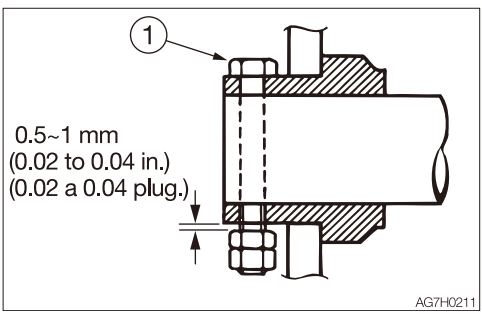

4. Align the turn prevention holes, and then install the bolt (1) and the nut. Be sure to leave a gap of about 0.5 to 1 mm (0.02 to 0.04 in.) between the nut and bucket bush, or the nut will come loose.

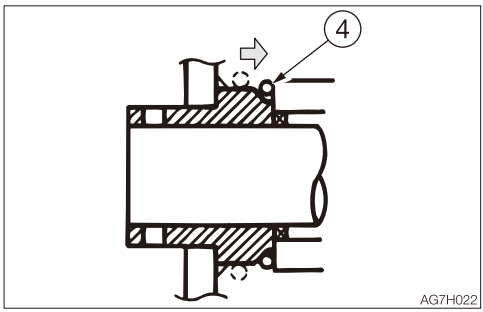

5. Adjust the gap between the bucket and the arm.
   Refer to “Adjusting the gap between the bucket and arm (If equipped)” on page 5-60.
6. Slide the O-ring (4).

Replacing the pin seal

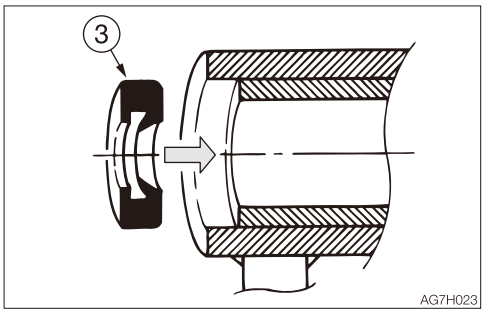

1. Set the pin seal (3) in the direction shown on the figure above.
2. Use a mallet to slowly press the pin seal in. Be careful not to damage the seal.

ADJUSTING THE GAP BETWEEN THE BUCKET AND ARM (IF EQUIPPED)

⚠ WARNING

- **Before performing maintenance or repairs under the machine, lower all working equipment to the ground or in the lowermost position.**
- **To prevent unexpected movement, securely block the working equipment when adjusting the gap.**

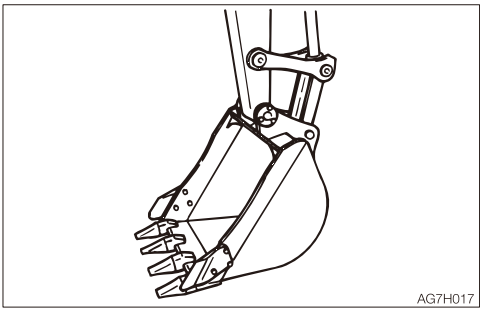

1. Lower the bucket to the ground as shown on the figure above in a stable position.
2. Check that the bucket dose not move, and then set the safety lock lever to the locked position and stop the engine.

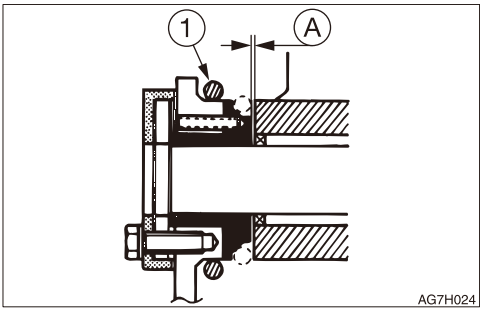

3. Move the O-ring (1) to bring the gap (A) into view and measure the width of the gap (A).
   The gap (A) should be 0.5 mm (0.02 in.).
   Swing the upperstructure slightly to the left and lightly press the arm point to the left side of the bucket (the side without an adjuster).

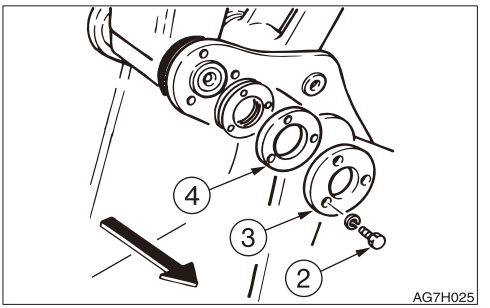

4. Remove the three bolts (2), the end plate (3) and flange (4).

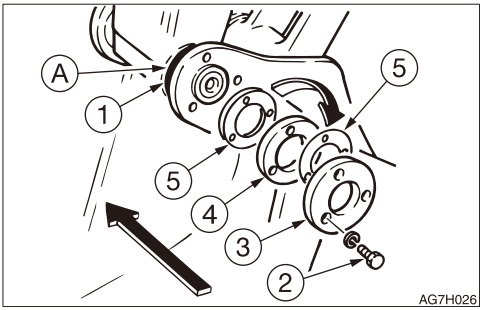

5. Pull out the adjustment shim(s) (5) corresponding to the gap (A) from between the flange (4) and the bucket body.
   Adjustment shim thickness : 0.5 mm (0.02 in.)
   Be careful that the gap is no less than 0.5 mm (0.02 in.) after adjustment.

Note:
Example (for a gap of 2 mm or 0.08 in.):
2 mm - 0.5 mm (standard value)= 1.5 mm (0.06 in.)
In the above example, three shims (5) should be removed.

6. Insert the adjustment shim(s) (5) removed in step 5 above between the end plate (3) and the flange (4), and then fasten it in place with the three bolts (2).
   · Tightening torque for bolts (2): 83 N·m (61.5 ft-lb.)
7. Return the O-ring (1) to the original position.

INSPECTING AND REPLENISHING THE WINDSHIELD WASHER FLUID

⚠ WARNING

Choose ethyl alcohol as washer solution. Do not use methyl alcohol as washer solution. It could damage the eyes.

Use a windshield washer fluid designed specifically for motor vehicles. Follow the instructions included with the washer fluid.

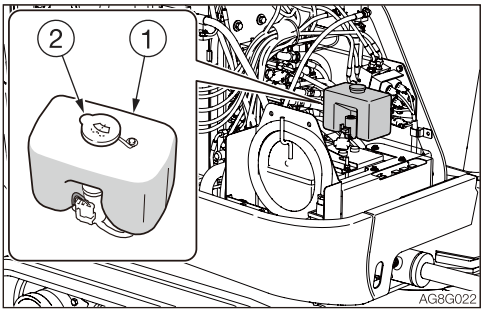

Inspection

1. Open the right side cover.
2. Inspect the washer tank (1) and add washer fluid if the level is low.

Replenishing

1. Mix the washer fluid to the prescribed concentration.
2. Remove the cap (2) and add washer fluid. Keep the dust away while replenishing the washer fluid.
3. Install the cap (2).

DRAINING THE WATER FROM THE WATER SEPARATOR

⚠ WARNING

- **Do not smoke or permit open flames while handling fuel or working on the fuel system.**
- **Stop the engine in a well-ventilated place and allow it to cool down before performing maintenance.**
- **Clean up spilled fuel immediately.**

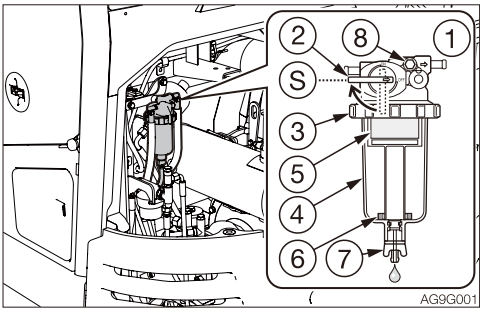

1. Open the engine hood.
2. Place a pan under the drain valve (7) to catch fuel.
3. Open the drain valve (7) and drain the water.
   If the water does not drain easily, loosen the plug (8).
4. Close the drain valve (7) and tighten the plug (8).
   Refer to “Bleeding air from the fuel system” on page 6-9.

LUBRICATING THE LEVERS AND PEDALS

⚠ WARNING

Set the machine to the parking posture, stop the engine, remove the starter key and store it. Failure to do so may result in the machine moving abruptly, leading to serious injury or death.

If the levers or pedals no longer move smoothly, grease them.

Operating levers

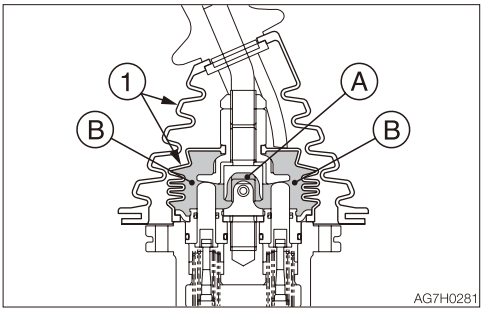

Travel levers/pedals

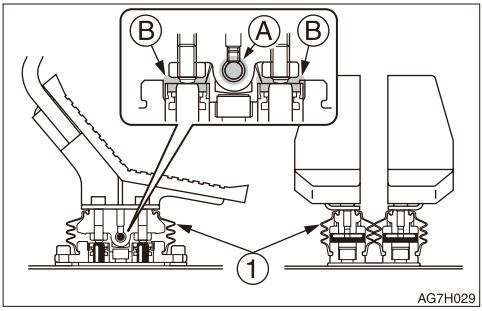

1. Remove the lower mount section of the boot (1) and turn it upward.
2. Wipe off the old grease.
3. Apply grease to points (A) and (B).
4. Set the boot (1) back as it was.

Boom swing pedal

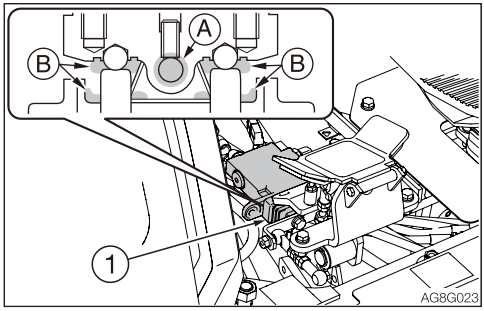

1. Remove the cover and floor mat.
2. Remove the lower mount section of the boot (1) and turn it upward.
3. Wipe off the old grease.
4. Apply grease to points (A) and (B).
5. Set the boot (1) back as it was.

Dozer blade lever

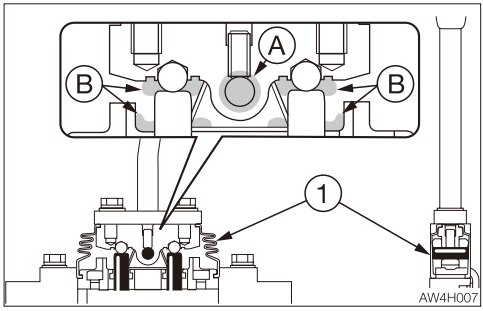

1. Remove the lower mount section of the boot (1) and turn it upward.
2. Wipe off the old grease.
3. Apply grease to points (A) and (B).
4. Set the boot (1) back as it was.

INSPECTING THE RUBBER CRAWLERS

Repair or replace the rubber crawlers if their condition becomes as described below. Consult your sales or service dealer for repair or replacement.

Rubber crawler
Replace the crawler if the entire crawler is stretched and cannot be adjusted.

(1) Lug

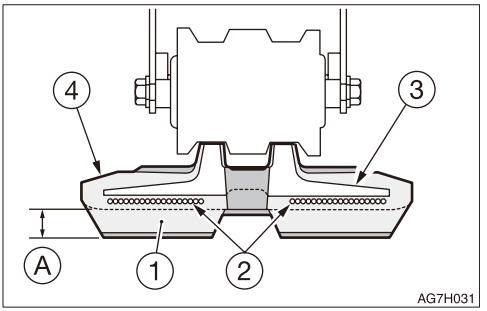

Replace if the height of (A) is 5 mm (0.2 in.) or below.

(2) Steel cord

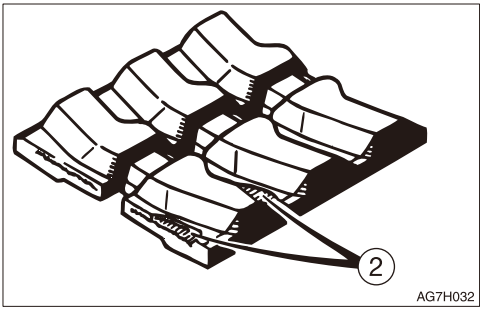

Replace if the steel cord is exposed for two links or more.
Replace if the half or more of the steel cords on one side are cut.

(3) Metal core

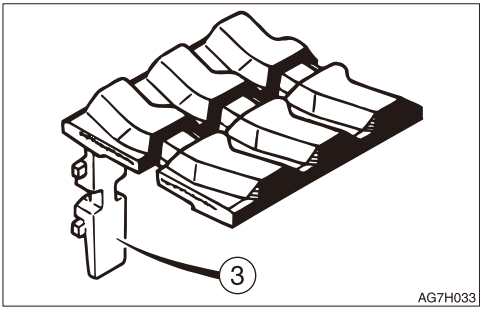

Replace if even one metal core is off.

(4) Rubber

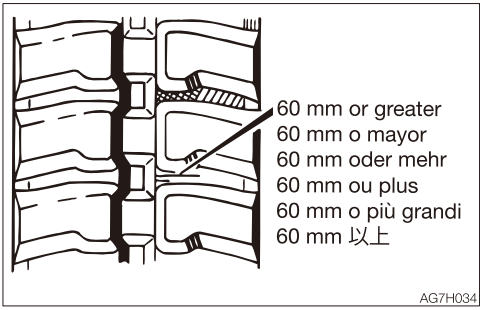

Repair if there are cracks of 60 mm (2.4 in.) or greater in length.
If the steel cord is visible, repair as soon as possible, regardless of the length of the crack.

REPLACING THE RUBBER CRAWLERS

⚠ WARNING

- **If you must work beneath the raised machine or working equipment, always use wood blocks, jack-stands or other rigid and stable supports. Never get under the machine or working equipment if they are not sufficiently supported.**
- **If maintenance must be performed with the engine running, always work as a two person team communicating each other.**
  - **One person must sit in the operator's seat so that he/she can immediately stop the engine when necessary. He/she must take care not to touch the lever or pedal unless necessary.**
  - **The one who performs maintenance must make sure to keep his/her body or clothing away from the moving part of the machine.**

Removal

1. Fully release the tension of the rubber crawler.
   Refer to "Inspecting and adjusting the crawler tension" on page 5-26.

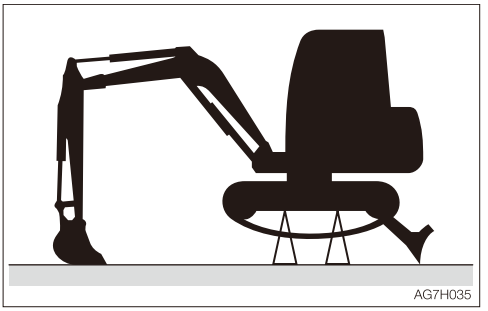

2. Use the working equipment to lift the body.

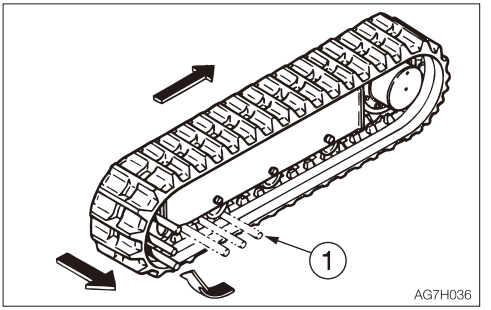

3. Set an iron pipe (1) in the rubber crawler and turn the sprocket slowly in the reverse direction.
4. Turn until the iron pipe (1) is directly next to the idler and the rubber crawler lifts away from the idler, then stop turning the sprocket.
5. Slide the rubber crawler sideways and remove it from the crawler frame.
   Remove the other rubber crawler using the same procedure.

Installation

1. Use the working equipment to lift the body.

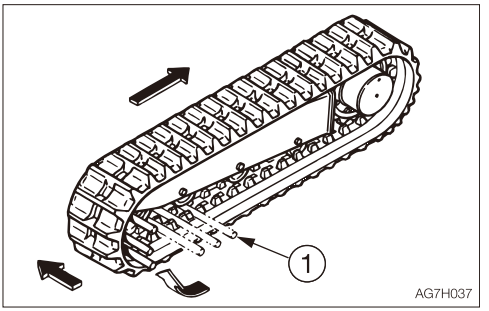

2. Set the rubber crawler on the sprocket.
3. Set an iron pipe (1) in the rubber crawler and turn the sprocket slowly in the reverse direction.
4. Turn until the iron pipe (1) is directly next to the idler and the rubber crawler lifts away from the idler, then stop turning the sprocket.
5. Slide the rubber crawler inward, engage it on the idler, then pull out the iron pipe.
6. Check that the rubber crawler is securely engaged on the sprocket and idler.
7. Tighten the rubber crawler to the standard tension.
   Refer to “Inspecting and adjusting the crawler tension” on page 5-26.
8. Install the other rubber crawler using the same procedure.

EVERY 2 YEARS

REPLACING THE RECEIVER DRYER

This operation requires experience. Ask your sales or service dealer for it.

MAINTENANCE DURING EXTENDED STORAGE PERIOD

Storage procedures

If the machine is to be stored for 30 days or more, store it indoors. If it must be stored outdoors, park the machine on a surface laid with lumber on a flat ground, and place a waterproof cover over it so that it stays dry.

1. Clean the machine.
2. Inspect for oil leakage, water leakage, cracks and loose nuts and bolts.
3. Add fuel and replace the hydraulic oil and oil.
4. To prevent rusting and freezing, replace the engine coolant with long-life coolant (LLC).
   Refer to “Cleaning the engine cooling system” on page 5-48.
5. Use the grease gun to lubricate the grease fittings.
6. Fully retract the bucket and arm cylinders and lower the bucket and dozer blade to the ground.
7. Apply rust-inhibiting oil to the hydraulic cylinder rods.
8. Disconnect the negative cable from the battery and cover the battery to prevent freezing.

During storage

⚠ WARNING

- **Do not operate the machine in an enclosed area without adequate ventilation.**
- **If natural ventilation is not possible, install ventilators, fans, exhaust extension pipes or other venting devices.**

1. To prevent rusting, operate the machine once a month so that the oil can be circulated throughout the system.
2. Inspect the battery and recharge it as necessary.
   Ask your sales or service dealer for recharging.

Starting the machine after storage

IMPORTANT: If the above “Storage procedures” have not been followed during the extended storage periods, consult your sales or service dealer before starting the machine again.

1. Wipe off the rust-inhibiting oil that was applied on the piston rods of the hydraulic oil cylinders.
2. Add oil or grease as necessary.

Returning the engine to service

1. Perform the daily checks.
2. The engine should be pre-oiled before startup.
   a. Crank the engine, leaving the fuel system shut off so the engine will not start, for 15 seconds.
   b. Then pause for 30 seconds.
   c. Repeat the procedure until you have cranked the engine for a total of one minute. This will circulate the oil in the engine’s lubrication system.
3. Prime the fuel system.
4. Start the engine. Allow the engine to idle for approximately 15 minutes while you check for:
   - Proper oil pressure
   - Fuel, engine oil or coolant leaks
   - Proper operation of the indicators and/or gauges
5. Avoid prolonged operation at minimum or maximum engine speeds and loads for the remainder of the first hour of operation.

TROUBLESHOOTING

SYMPTOMS THAT ARE NOT MALFUNCTIONS

The symptoms listed below are not malfunctions.

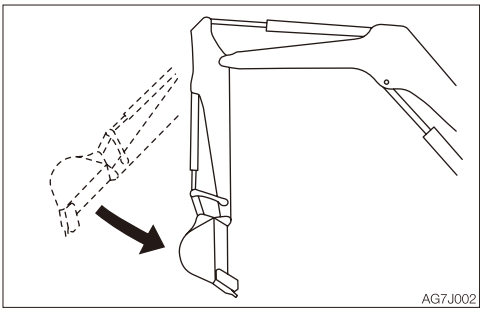

- The arm retracting speed momentarily slows down when it reaches an almost vertical position while the engine is running at low speed.

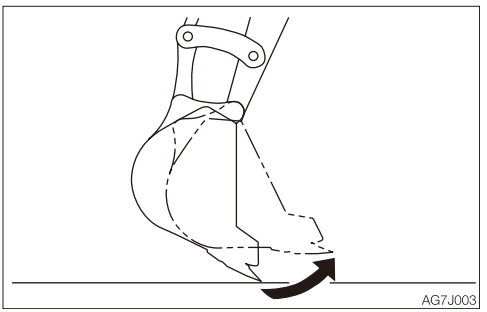

- The bucket teeth moving speed momentarily slows down when it reaches an almost horizontal position while the engine is running at low speed.
- The slew motor produces noise at the beginning and end of the slewing.
- The travel motor produces noise when stopped suddenly from its high speed traveling.
- The control valve produces noise if excessive force is applied to the working equipment or when it moved to the stroke end.
- It becomes less easy to operate the machine when an attachment weighing more than a standard arm or bucket is installed.

IF THE ENGINE OVERHEATS

⚠ WARNING

- **Do not open the engine hood when steam is coming from it. The steam or hot water may spurt out and cause burns.**
- **Do not try to remove the radiator cap or the drain plug when the cooling water is hot. Stop the engine, wait until the engine and the radiator cool, and then slowly loosen the radiator cap to release the internal pressure.**
- **Before performing maintenance, stop the engine and allow the machine to cool down.**

The symptoms listed below indicate overheating.

< Canopy >

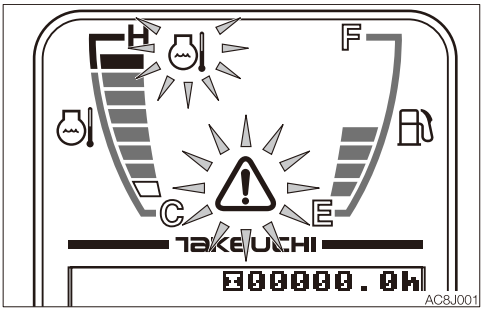

< Cab >

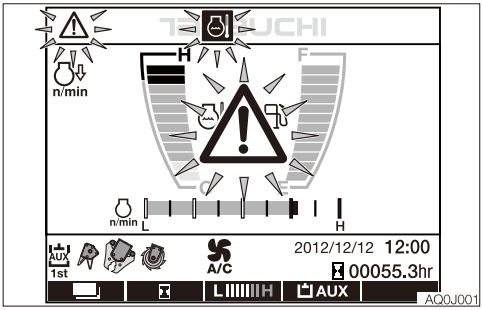

- An alarm is sounded and the engine emergency lamp and the coolant temperature warning lamp start flashing.
- The water temperature gauge level is in the red zone.
- Steam comes from the engine room.

Remedy procedure

1. Park the machine in a safe place.
2. Check if steam is coming out of the closed engine hood.
3. If there is steam, stop the engine immediately and contact your sales or service dealer for repair. If steam, is not coming out run the engine at low idle and let the water temperature cool down.
4. When the water temperature gauge level drops in the green zone, stop the engine.
5. Perform the inspections and the remedies listed below once the engine cools down.
   - Fan belt slack..... Adjust
     Refer to page 5-24.
   - Coolant level ..... Add
     Refer to page 5-18.
   - Water leakage ..... Repair
   - Radiator fins..... Clean
     Refer to page 5-36.
   - Sediment in cooling system
     ..... Clean
     Refer to page 5-48.

If the problem persists after the above remedies, contact your sales or service dealer for repair.

IF THE BATTERY GOES DEAD

The symptoms below indicate that the battery is dead.
- The starter motor does not turn or fails to start the engine.
- The horn is too weak.

Remedy procedure
Start the engine using the booster battery on the other vehicle (booster vehicle) and the jumper cables.

⚠ WARNING

- **When starting the engine using the jumper cables, be sure to connect the cables by following the proper steps. Improper use of jumper cables can result in battery explosion or unexpected machine motion.**
  - **Do not allow the booster vehicle and the machine with a dead battery (dead machine) to touch each other.**
  - **Do not allow the positive (+) and the negative (–) clips of the jumper cables to touch each other.**
  - **When connecting, attach the jumper cable to the positive (+) terminals first. When disconnecting, remove the cable from the negative (–) terminal (ground) first.**
  - **Connect the last clip of the jumper cable to a point as far away from the battery as possible.**
- **Always wear the protective goggle when jump starting the engine by using the jumper cables.**
- **Set the battery charging current to at or below one tenth of the rated capacity. Too high charging current could cause the battery to leak or be depleted, resulting in explosion if ignited.**

IMPORTANT: Use the jumper cables and clips of a size suited to the capacity of battery. Do not use damaged or corroded jumper cables and clips.

IMPORTANT: Be sure that the battery of the booster vehicle has the same capacity as the battery of the dead machine.
IMPORTANT: Be sure to connect the clips securely.

Connecting the jumper cables

IMPORTANT: Set the starter keys of the booster vehicle and the dead machine to the OFF position.

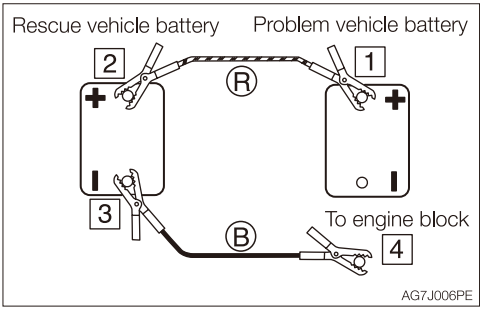

1. Connect the clip of jumper cable (R) to the positive (+) battery terminal of the dead machine.
2. Connect the other clip of jumper cable (R) to the positive (+) battery terminal of the booster vehicle.
3. Connect the clip of jumper cable (B) to the negative (–) battery terminal of the booster vehicle.
4. Connect the other clip of jumper cable (B) to the engine block of the dead machine. Connect the clip to a place as far from the battery as possible.

Starting the engine
1. Check that the clips are securely connected to the terminals.
2. Start the engine of the booster vehicle and run it at high speed.
3. Start the engine of the dead machine.

Disconnecting the jumper cables

Once the dead machine is successfully running, remove the jumper cables by following the same steps as for connection in the reverse order.

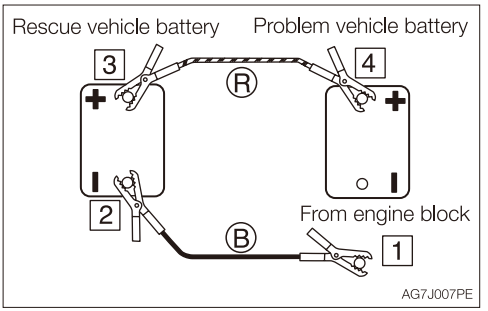

1. Disconnect the clip of jumper cable (B) from the engine block of the dead machine.
2. Disconnect the other clip of jumper cable (B) from the negative (–) battery terminal of the booster vehicle.
3. Disconnect the clip of jumper cable (R) from the positive (+) battery terminal of the booster vehicle.
4. Disconnect the clip of jumper cable (R) from the positive (+) battery terminal of the dead machine.

Recharging

Ask your sales or service dealer for recharging the dead battery.

IF A FUSE BLOWS

If a light does not come on or the electrical system does not work, a fuse may be blown. Inspect the fuses.

INSPECTING AND REPLACING THE FUSE

⚠ WARNING

If the fuse blows again soon after replacement, then the electric system is likely faulty. It may pose a fire hazard if not properly repaired. Contact your sales or service dealer for advice.

1. Turn the starter key to the OFF position to stop the engine.

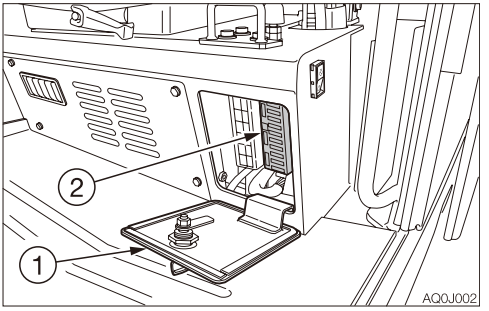

2. Open the fuse box cover (1).
3. Check for any blown fuses (2).

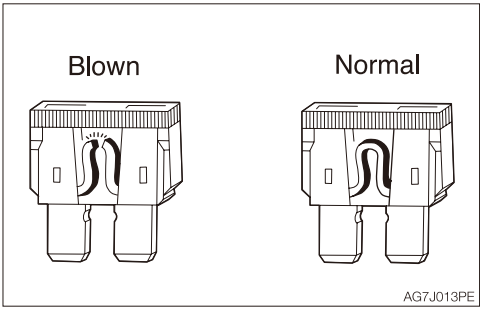

4. If a fuse is blown, replace it with a spare fuse of the same capacity.

Fuse layout and circuits protected (1)

<Cab>

Capacity	Symbol	Protected circuit
5A		Switch lighting
10A		Horn
10A		Starter switch
10A		Immobilizer
20A		Light
10A		Wiper
20A		Lever lock
10A	CTL (2)	Controller power supply (2)
10A	SOL	Solenoid
20A	CAB	Cab interior power supply
25A	OPT	Option
10A		Compressor
10A		Feed pump
30A		Air conditioner blower motor
20A	CAB	Cab light
20A	CTL (1)	Controller power supply (1)

<Canopy>

Capacity	Symbol	Protected circuit
5A		Switch lighting
10A		Horn
5A		Starter switch
10A		Immobilizer
20A	(1)	Light (1)
20A		Lever lock
15A	CTL	Controller power supply
25A	SOL	Solenoid
20A	OPT (1)	Option (1)
25A	OPT (2)	Option (2)
10A		Feed pump
15A	(2)	Light (2)

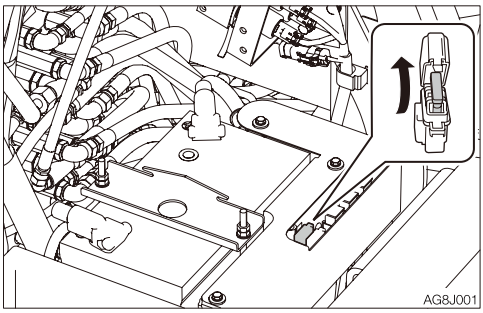

5. Open the right side cover.
6. Open the fuse box.
7. If a fuse is blown, replace it with a spare fuse of the same capacity.

Fuse layout and circuits protected (2)

Capacity	Protected circuit
20A	ECU
25A	Fuel pump

INSPECTING THE FUSIBLE LINK

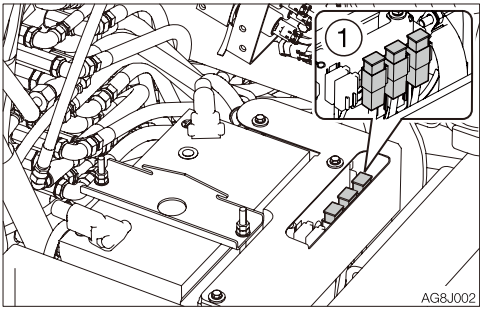

If the machine is not turned on after turning the starter switch to the ON position, the cartridge type fusible link (1) is likely blown. Open the right side cover and inspect it. If the fusible link is blown, contact your sales or service dealer.

Note: Fusible links are large type fuses used in high current applications. Like a regular fuse, they act as fuses by protecting the electric components and wirings from damage caused by excessive current draw.

RESTARTING AFTER ADDING FUEL

BLEEDING AIR FROM THE FUEL SYSTEM

IMPORTANT: NEVER use the starter motor to crank the engine in order to prime the fuel system. This may cause the starter motor to overheat and damage the coils, pinion gear and/or ring gear.
IMPORTANT: If the engine stalls due to fuel shortage, add fuel, turn the key to the ON position for 60 seconds, and then turn it to the START position. Running the starter for a long time before there is enough fuel is going through can cause the starter to fail.

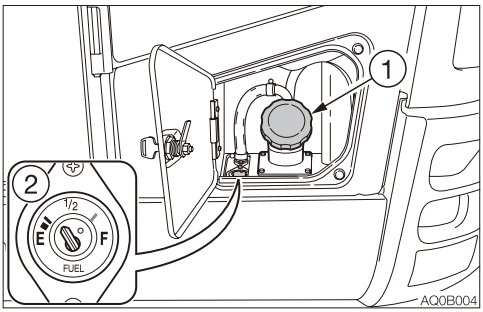

1. Add fuel.

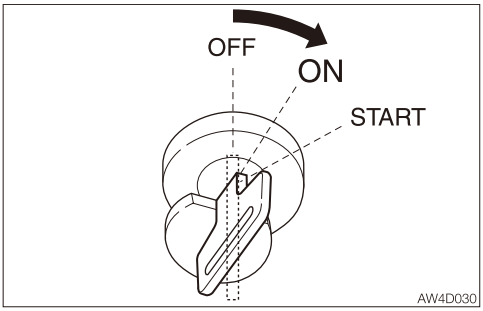

2. Turn the starter key to the ON position and hold it for about 60 seconds.
   The automatic air bleeder bleeds air from the fuel system.

Note: Air in the fuel system causes the engine to fail to start or to have other problems. Always bleed air when the fuel tank is emptied or when there is air in the fuel system.

IF A WARNING LAMP FLASHES

If an alarm is sounded or a warning lamp starts flashing during operation, park the machine in a safe place and perform the remedy procedures described below.

Warning lamp	Lamp name	Causes and remedies
 AW4J007	**Vehicle and engine emergency lamp**	There is a problem in the machine. Refer to the respective warning lamp below. Get the vehicle or engine error code number from the multi-information display or the instrument cluster, and then consult your sales or service dealer referring to the “Vehicle error code list” or “Engine error code list”. Refer to “Multi-information display” on page 2-16 or “Instrument cluster” on page 2-31. Refer to “Vehicle error code list” on pages 6-12 and 6-13. Refer to “Engine error code list” on pages 6-14 to 6-16.
 AW4J0041	**ECM error warning lamp**	An engine problem is detected. If an error code is displayed on the multi-information display or the instrument cluster, inform your sales or service dealer of the code and ask for help. Refer to “Multi-information display” on page 2-16 or “Instrument cluster” on page 2-31. Refer to “Engine error code list” on pages 6-14 to 6-16.
 AG7J019	**Battery charge warning lamp**	There is a problem with the fan belt or charger. Check the fan belt for slack or breakage and adjust as necessary. If the lamp continues flashing after maintenance, there is likely a problem with the charger. Consult your sales or service dealer for help. Refer to “Inspecting and adjusting the fan belt” on page 5-24.
 AG7J017	**Engine oil pressure warning lamp**	There is a problem in the engine lubrication system. Check the engine oil level. If the lamp is flashing when the level is normal or even after replenishment of oil or coolant, consult your sales or service dealer. Refer to “Inspecting and replenishing the engine oil” on page 5-19.

Warning lamp	Lamp name	Causes and remedies
 AG7J018	**Coolant temperature warning lamp**	The coolant temperature is too high and the engine is overheating. Refer to “If the engine overheats” on page 6-3.
 AG7J020	**Air cleaner warning lamp**	The air cleaner is clogged. Clean it. Refer to “Cleaning the air cleaner” on page 5-35.
 AW4J010	**Fuel level warning lamp**	The fuel level is too low. Add fuel. Refer to “Inspecting the fuel level” on page 5-21.
 AQ0J004	**Third auxiliary hydraulic warning lamp**	Pressure in the third auxiliary hydraulic line is too low Consult your sales or service dealer for help.
 AM1J005	**Lift overload warning indicator lamp**	This lamp starts flashing if the overload warning device is activated. If it occurs, reduce the load to be lifted. Refer to “Lift overload warning switch (If equipped)” on page 2-60.

VEHICLE ERROR CODE LIST

If an error code appears on the display, consult your sales or service dealer.

Error code	Error details
9	Impossible to sense ACC key
19	Parameter version mismatching
402	CAN 0 communication error
502	CAN communication error (engine ECU)
602	CAN communication error (cluster gauge)
612	CAN communication error (OX024)
822	CAN communication error (Takeuchi Security System)
1703	Main power supply voltage error (too high)
1704	Main power supply voltage error (too low)
1713	OX024 power supply voltage error (too high)
1714	OX024 power supply voltage error (too low)
2503	Sensor voltage error (too high) MMC
2504	Sensor voltage error (too low) MMC
3300	Alternator charge faulty
3401	Engine oil pressure error
3500	Overheat
3600	Air cleaner clogged
3700	Water separator alarm
5303	Accelerator sensor error (too high)
5304	Accelerator sensor error (too low)
5505	Fuel gauge resistance value error (cable break)
5603	Lift alarm sensor error (too high)
5604	Lift alarm sensor error (too low)
6503	AUX1 slide switch voltage value error (too high)
6504	AUX1 slide switch voltage value error (too low)
6509	AUX1 slide switch neutral error

Error code	Error details
6519	AUX1 (L) switch error
6529	AUX1 (R) switch error
6603	AUX2 slide switch voltage value error (too high)
6604	AUX2 slide switch voltage value error (too low)
6609	AUX2 slide switch neutral error
6709	AUX3 button error (Foot)
6719	AUX3 switch error (Grip)
8005	Pump PWM output voltage error (too low)
8006	Pump PWM output voltage error (too high)
8015	AUX1 (L) PWM output voltage error (too low)
8016	AUX1 (L) PWM output voltage error (too high)
8025	AUX1 (R) PWM output voltage error (too low)
8026	AUX1 (R) PWM output voltage error (too high)
8035	AUX2 (L) PWM output voltage error (too low)
8036	AUX2 (L) PWM output voltage error (too high)
8045	AUX2 (R) PWM output voltage error (too low)
8046	AUX2 (R) PWM output voltage error (too high)
9900	Options settings change (TFM)
9990	Model change
9991	Unknown models

PWM = Pulse width modulation

ENGINE ERROR CODE LIST

If an error code appears on the display, consult your sales or service dealer.

Error code		Error details	DTC
SPN	FMI		
1210	4	Engine Fuel Rack Position Sensor: Shorted to low source	P1202
	3	Engine Fuel Rack Position Sensor: Shorted to high source	P1203
108	4	Barometric Pressure Sensor: Shorted to low source	P2228
	3	Barometric Pressure Sensor: Shorted to high source	P2229
	2	Barometric Pressure Sensor: Intermittent fault	P2230
1136	4	E-ECU Internal Temperature Sensor: Shorted to low source	P0668
	3	E-ECU Internal Temperature Sensor: Shorted to high source	P0669
	2	E-ECU Internal Temperature Sensor: Intermittent fault	P1664
	0	E-ECU Internal Temperature: Too high	P0634
110	4	Engine Coolant Temperature Sensor: Shorted to low source	P0117
	3	Engine Coolant Temperature Sensor: Shorted to high source	P0118
	2	Engine Coolant Temperature Sensor: Intermittent fault	P0119
	0	Engine Coolant Temperature: Too high	P0217
1079	4	Sensor 5V: Shorted to low source	P0642
	3	Sensor 5V: Shorted to high source	P0643
	2	Sensor 5V: Intermittent fault	P1644
158	1	System Voltage: Too low	P0562
	0	System Voltage: Too high	P0563
1078	4	Engine Fuel Injection Pump Speed Sensor: Shorted to low source	P0340

Error code		Error details	DTC
SPN	FMI		
522402	4	Auxiliary Speed Sensor: Shorted to low source	P1340
522241	4	Engine Fuel Rack Actuator Relay: Circuit fault A	P1222
	3	Engine Fuel Rack Actuator Relay: Circuit fault B	P1223
	7	(Reserved)	P1221
	2	Engine Fuel Rack Actuator Relay: Intermittent fault	P1224
522243	4	Air Heater Relay: Circuit fault A	P1232
	3	Air Heater Relay: Circuit fault B	P1233
	2	Air Heater Relay: Intermittent fault	P1234
522242	4	Cold Start Device: Circuit fault A	P1242
	3	Cold Start Device: Circuit fault B	P1243
	2	Cold Start Device: Intermittent fault	P1244
522251	4	EGR Stepping Motor “A”: Circuit fault A	P1402
	3	EGR Stepping Motor “A”: Circuit fault B	P1403
522252	4	EGR Stepping Motor “B”: Circuit fault A	P1412
	3	EGR Stepping Motor “B”: Circuit fault B	P1413
522253	4	EGR Stepping Motor “C”: Circuit fault A	P1422
	3	EGR Stepping Motor “C”: Circuit fault B	P1423
522254	4	EGR Stepping Motor “D”: Circuit fault A	P1432
	3	EGR Stepping Motor “D”: Circuit fault B	P1433
100	4	Oil Pressure Switch: Shorted to low source	P1192
	1	Oil Pressure: Too low	P1198
167	4	Battery Charge Switch: Shorted to low source	P1562
	1	Charge warning	P1568

Error code		Error details	DTC
SPN	FMI		
522314	0	Engine Coolant Temperature: Abnormal temperature	P1217
522323	0	Air Cleaner: Mechanical malfunction	P1101
522329	0	Oily Water Separator: Mechanical malfunction	P1151
190	0	Engine speed: Overspeed condition	P0219
638	4	Engine Fuel Rack Actuator: Shorted to low source	P1212
	3	Engine Fuel Rack Actuator: Shorted to high source	P1213
	7	Engine Fuel Rack Actuator: Mechanical malfunction	P1211
	2	Engine: Malfunction	P1214
639	12	High-speed CAN Communication: Communication fault	U0001
630	2	E-ECU internal fault: EEPROM checksum error (Data Set 2)	P1601
	12	E-ECU internal fault: EEPROM read/write fault	P0601
628	12	E-ECU internal fault: Flash ROM checksum error (Main software)	P0605
	2	E-ECU internal fault: Flash ROM checksum error (Data Set 1)	P1605
	2	E-ECU internal fault: Flash ROM checksum error (Data Set 2)	P1606
1485	4	E-ECU Main Relay: Shorted to low source	P0686
522727	12	E-ECU internal fault: Sub-CPU error A	P1610
	12	E-ECU internal fault: Sub-CPU error B	P1611
	12	E-ECU internal fault: Sub-CPU error C	P1612
522728	12	E-ECU internal fault: Engine Map Data Version Error	P1620
522730	12	Immobilizer: CAN communication fault	U0167
	8	Immobilizer: Pulse communication fault	U1167
1202	2	Immobilizer: System fault	U0426

MEMO

OTHER SYMPTOMS

For symptoms not included in the table below or if the problem persists after the proper remedies have been taken, consult your sales or service dealer.

Symptoms	Major causes	Remedies
Left and right operating levers do not move smoothly	• Insufficient grease on the left and right operating levers	• Grease the levers. Refer to page 5-63.
Travel levers, blade lever and pedals do not move smoothly	• Insufficient grease on travel levers, blade lever and pedals	• Grease the levers and pedals. Refer to page 5-63.
Operation of hoe attachment, dozer blade, auxiliary hydraulics, slewing or traveling is not possible.	• Safety lock lever is raised (locked)	• Lower (release) the safety lock lever. Refer to page 2-61
	• Fuse is blown	• Replace the fuse. Refer to page 6-6.
Digging force is insufficient	• Hydraulic oil level too low	• Add to the specified level. Refer to page 5-22.
	• Hydraulic oil is not warm enough	• Perform the warm-up. Refer to pages 3-8 to 3-9.
	• Air cleaner is clogged	• Clean the air cleaner. Refer to page 5-35.
	• Hydraulic oil is not of suitable type	• Replace the hydraulic oil. Refer to page 5-52.
Traveling is not possible or not smooth	• Stones or foreign objects are stuck	• Remove the foreign object.
Machine veers to the right/left	• Stones or foreign objects are stuck	• Remove the foreign object.
	• Crawler belt tension is faulty.	• Check and adjust (ask your sales or service dealer). Refer to pages 5-26 to 5-27.
Travel speed cannot be changed	• Fuse is blown	• Replace the fuse. Refer to page 6-6.
Slewing is not possible or not smooth	• Insufficient grease on slew bearing	• Grease the bearing. Refer to page 5-28.
Hydraulic oil temperature is too high	• Hydraulic oil level too low	• Add up to the specified level. Refer to page 5-22.

Symptoms	Major causes	Remedies
Starter motor turns but engine does not start	• Insufficient fuel	• Add fuel. Refer to page 5-21.
	• Air in fuel system	• Bleed air. Refer to page 6-9.
	• Water in fuel system	• Drain water. Refer to page 5-29.
	• Fuel is frozen.	• Warm the fuel pipe with hot water or wait until the ambient temperature becomes high.
	• Engine control system is faulty.	• Adjust or repair (ask your sales or service dealer).
	• Fuel line is faulty.	• Adjust or repair (ask your sales or service dealer).
	• Preheating device is faulty.	• Adjust or repair (ask your sales or service dealer).
Crawlers come off	• Crawlers too loose	• Check and adjust (ask your sales or service dealer). Refer to pages 5-26 to 5-27.
Engine exhaust is white or bluish	• Excessive engine oil	• Adjust to the specified level. Refer to page 5-19.
	• Insufficient engine warm-up.	• Perform the warm-up operation. Refer to page 3-5.
	• Engine control system is faulty.	• Adjust or repair (ask your sales or service dealer).
	• Fuel line is faulty.	• Adjust or repair (ask your sales or service dealer).
	• Prolonged idling (approx. two hours or more)	• Increase the engine RPM and check for smoke.
	• Poor fuel	• Replace the fuel.

Symptoms	Major causes	Remedies
Engine exhaust is occasionally black	• Air cleaner is clogged	• Clean the air cleaner. Refer to page 5-35.
	• Engine control system is faulty.	• Adjust or repair (ask your sales or service dealer).
	• Fuel line is faulty.	• Adjust or repair (ask your sales or service dealer).
	• Clogging in the exhaust line.	• Adjust or repair (ask your sales or service dealer).
	• DPF is faulty.	• Adjust or repair (ask your sales or service dealer).
Irregular noise is produced from the engine (combustion or mechanical noise)	• Low quality fuel is being used	• Replace the fuel.
	• Engine is overheating	• Refer to “If the engine overheats” on page 6-3.
	• Damage inside the muffler	• Replace the muffler. For replacement, ask your sales or service dealer.

LOWERING THE BOOM TO THE GROUND

If the hoe attachment must be lowered to the ground while the engine is stopped, use the following procedure.

Procedure 1 (machines with an accumulator)
Perform this operation within 10 minutes after the engine stopping.
1. Sit at the operator's seat.
2. Turn the starter switch to the ON position.
3. Lower the safety lock lever to the unlock position
4. Slowly push the operating lever forward to lower the boom.

Procedure 2 (machines without an accumulator)
This operation is dangerous and requires experience. Ask your sales or service dealer for it.

⚠ WARNING

- **Stop the engine and allow the machine to cool down before performing maintenance.**
  - **The engine and the hydraulic system and many other parts of the machine are hot immediately after the engine is stopped. Touching these parts will cause burns.**
  - **The hydraulic oil is also hot and under high pressure immediately after the engine is stopped.**
    Be careful when loosening the caps or plugs. Working on the machine under these conditions could result in burns or injuries due to the hot oil spurting out.
- **Keep away from the working area when the hoe attachment is lowered. You may be hit by dirt falling out of the bucket or the hoe attachment as it drops.**
- **Slowly turn the hose nut and lower the boom at a slow pace.**
- **Do not loosen or remove the hoses not located in the specified places. Oil may spurt out if wrongly handled.**

Equipped with emergency shut-off valve

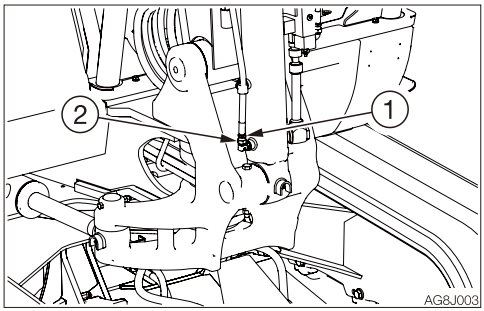

1. Place a pan under the hose to catch the waste oil.
2. Hold the hose fitting (1) with a wrench and slowly loosen the hose nut (2) with another wrench.
3. The oil in the boom cylinder is drained and the hoe attachment is lowered.
4. After the hoe attachment is lowered to the ground, check the safety and stability of the machine.
5. Hold the hose fitting (1) with a wrench and tighten the hose nut (2) with another wrench.
   - Tightening torque: 31.4 N·m (23.1 ft-lb.)

TOWING

⚠ WARNING

When towing, serious injury or death could result, if performed incorrectly or the wire rope being used is inappropriate or not properly inspected.

- **It becomes dangerous if the wire rope breaks or becomes disengaged. Use a wire rope appropriate for the required tractive force.**
- **Do not use a wire rope that is kinked, twisted or otherwise damaged.**
- **Do not apply heavy loads abruptly to the wire rope.**
- **Wear safety gloves when handling the wire rope.**
- **Make sure there is an operator on the machine being towed as well as on the machine that is towing.**
- **Never tow on slopes.**
- **Do not let anyone come near to the wire rope while towing.**

IMPORTANT: Do not tow a machine if its engine does not start or if the machine does not run. Doing so could damage the machine being towed.
When recovering a machine from soft terrain such as mud, hoist the machine or contact your sales or service dealer.
IMPORTANT: Be sure to follow the steps below closely when using the towing hole to tow. Failure to heed even one of the steps may cause damage to the towing hole or other parts of the frame.

Towing the machine (when the engine is started, the travel motor runs)
Use the procedure described below to tow heavy objects or the machine itself if it should get stuck in the mud and not be able to get out on its own.

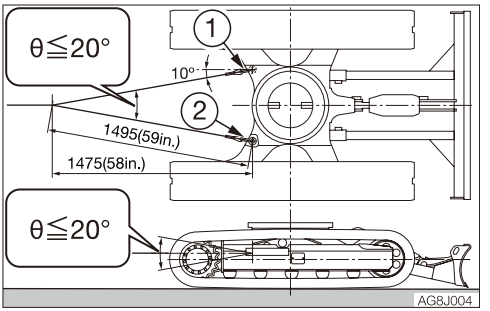

- Permissible forces: 61.4 kN (13803 lbf)
  Do not tow using only a towing hole on one side.

1. Attach the wire rope to the shackle (1).
2. Fasten the shackle (1) to the towing holes (2).
3. Make sure that the wire rope is at a cone angle of 20° or less to the travel frame.
4. Move the machine to tension the wire rope.
5. Move the machine at a low speed of 2 km/h (1.24 mph) or less to a place (convenient location for repair) a short distance from the site.

IF THE CAB OR CANOPY IS DAMAGED

⚠ WARNING

Immediately replace the damaged cab or canopy. Serious injury or death may occur if the machine is operated with damaged cab/canopy.
Do not operate the machine until the replacement is complete. Do not try to repair the damaged cab or canopy by welding. Doing so could endanger the safety of the cab/canopy.

Canopy part number: 05584-00085
Cab part number: 03586-00140

SPECIFICATIONS



BASIC SPECIFICATIONS

Type				Canopy	Cab
MASS					
Operating mass	kg (lb)	Rubber crawlers		3825 (8433)	4015 (8851)
		Steel crawlers		3930 (8664)	4120 (9083)
PERFORMANCE					
Bucket capacity (Standard bucket)	m^3 (cu. ft.)	Heaped		0.12 (4.24)	
		Struck		0.09 (3.18)	
Slew speed	min^{-1} (rpm)			9.6 (9.6)	
Travel speed	km/h (mph)	Rubber crawlers	1st	2.9 (1.8)	
			2nd	5.3 (3.29)	
		Steel crawlers	1st	2.6 (1.62)	
			2nd	4.8 (2.98)	
Gradeability	(degrees)			30	
Ground pressure	kPa (psi)	Rubber crawlers		29.7 (4.31)	31.1 (4.51)
		Steel crawlers		31.2 (4.52)	32.7 (4.74)
Noise level dB (A)	Sound power level			L_{WA} 96	
	Emission sound pressure level at the operator's position (ISO 6396,2008:)			L_{pA} 73	
ENGINE					
Manufacturer and model				Yanmar 4TNV88-ZSTB1	Yanmar 4TNV88-ZSTB
Rated output	Net (ISO 14396)	kW/min^{-1} (hp/rpm)		27.2/2200 (36.5/2200)	
	Net (ISO 9249/ SAE J1349)	kW/min^{-1} (hp/rpm)		26.0/2200 (34.9/2200)	
Displacement		ml (cu.in.)		2189 (133.6)	
Starter		V-kW		12-2.3	
Alternator		V-kW		12-0.66	
Battery (IEC 60095-1)		V-A·h		12-80	

MEMO

MACHINE DIMENSIONS

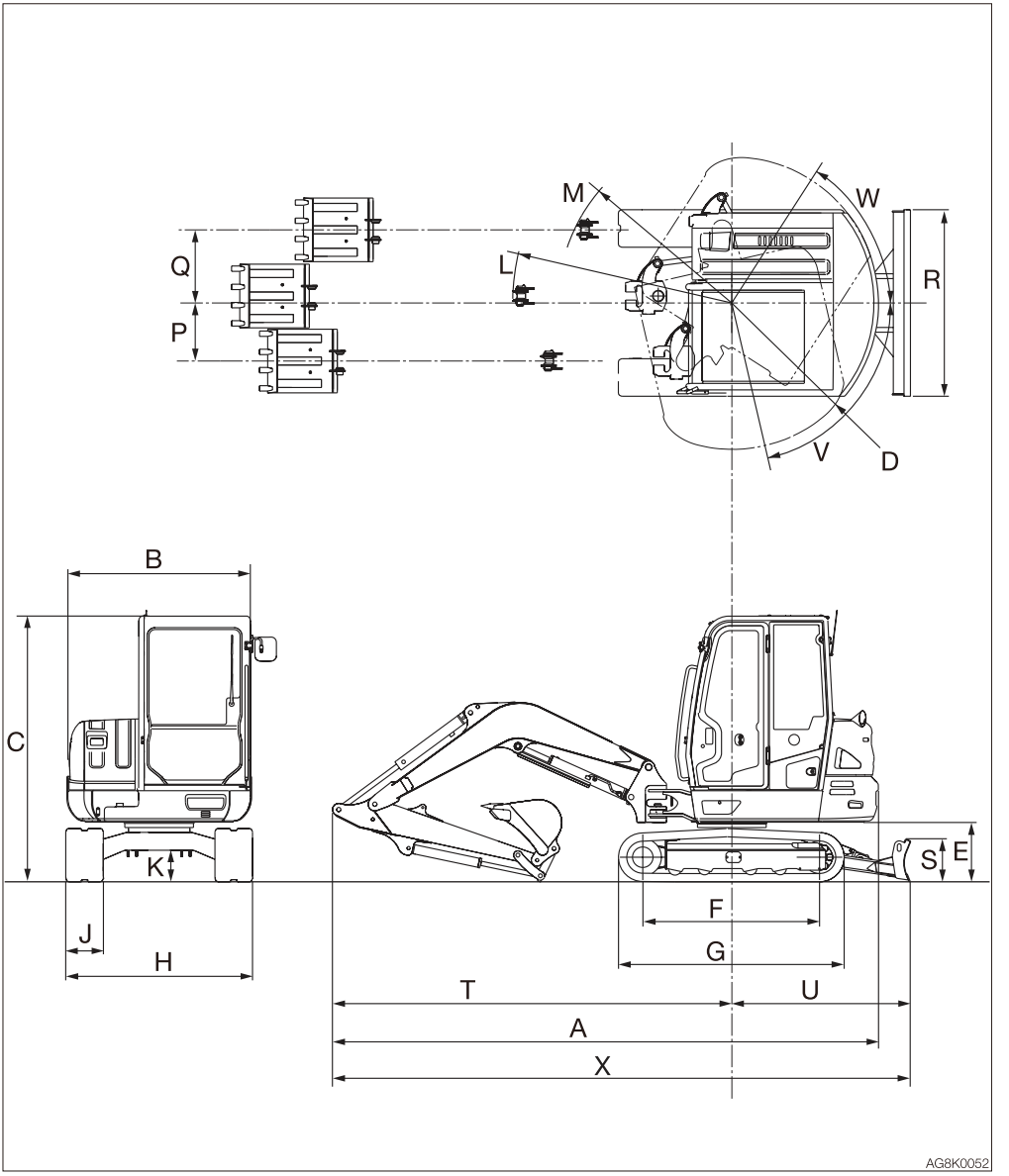

Unit: mm (inch)

	Item	Middle arm	Long arm	
		Rubber crawlers	Rubber crawlers	Steel crawlers
A	Overall length	5065 (199.4)	5085 (200.2)	5080 (200)
B	Upperstructure overall width	1720 (67.7)	←	←
C	Overall height	2490 (98)	2490 (98) 2505 (98.6)**	2505 (98.6) 2520 (99.2)**
D	Slew radius	1365 (53.7)	←	←
E	Clearance height under upperstructure	570 (22.4)	←	565 (22.2)
F	Crawler base	1645 (64.8)	←	1595 (62.8)
G	Crawler overall length	2105 (82.9)	←	2070 (81.5)
H	Crawler overall width	1740 (68.5)	←	←
J	Crawler shoe width	350 (13.8)	←	←
K	Ground clearance of undercarriage	295 (11.6)	←	290 (11.4)
L	Minimum radius of equipment and attachment	2020 (79.5)	2040 (80.3)	←
M	Minimum radius of equipment at maximum front offset	1600 (63)	1620 (63.8)	←
P	Offset distance of bucket (right swing)	540 (21.3)	←	←
Q	Offset distance of bucket (left swing)	680 (26.8)	←	←
R	Dozer blade width	1740 (68.5)	←	←
S	Dozer blade height	395 (15.6)	395 (15.6) 400 (15.7)*	←
T	Front distance to axis of rotation	3700 (145.7)	3720 (146.5)	3715 (146.3)
U	Dozer blade distance to axis of rotation	1650 (65)	1650 (65) 1655 (65.2)*	←
V	Boom swing angle (Left)	77°	←	←
W	Boom swing angle (Right)	57°	←	←
X	Overall length (dozer blade at rear)	5365 (211.2)	5380 (211.8) 5390 (212.2)*	5380 (211.8) 5385 (212)*

*: With an angle dozer blade
**: Canopy

OPERATING RANGES

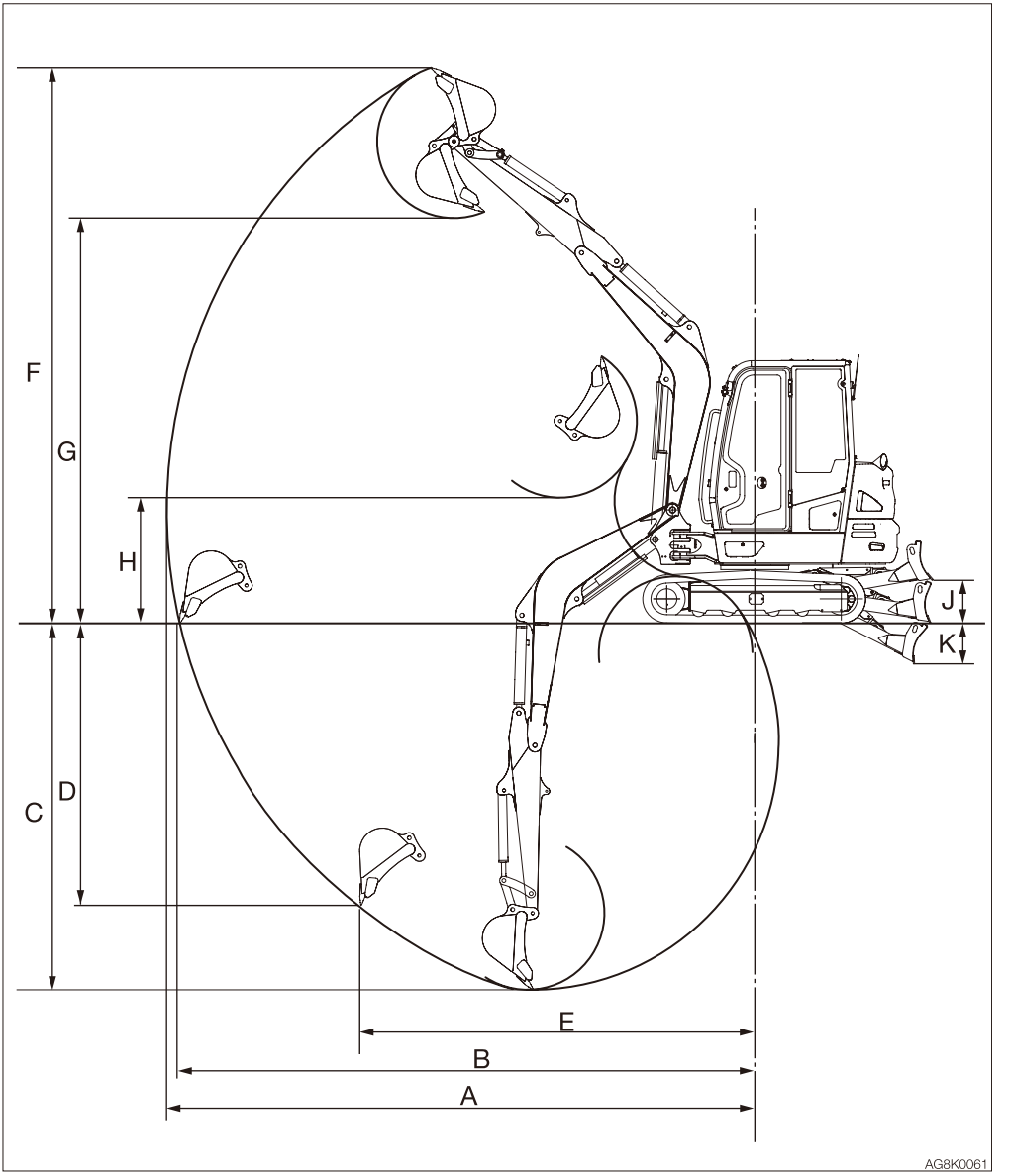

Unit: mm (inch)

	Item	Middle arm	Long arm	
		Rubber crawlers	Rubber crawlers	Steel crawlers
A	Maximum reach	5405 (212.8)	5545 (218.3)	←
B	Maximum reach at ground reference plane	5280 (207.9)	5425 (213.6)	←
C	Maximum digging depth	3315 (130.5)	3465 (136.4)	←
D	Maximum vertical digging depth	2525 (99.4)	2665 (104.9)	2670 (105.1)
E	Reach at maximum vertical digging depth	3680 (144.9)	3725 (146.7)	←
F	Maximum height of cutting edge	5145 (202.6)	5245 (206.5)	5240 (206.3)
G	Maximum dumping height	3725 (146.7)	3825 (150.6)	←
H	Minimum dumping height	1335 (52.6)	1185 (46.7)	1180 (46.5)
J	Dozer blade maximum lifting	405 (15.9) 410 (16.1)*	←	400 (15.8) 405 (15.9)*
K	Dozer blade maximum lowering	385 (15.2)	←	390 (15.3)

*: With an angle dozer blade

LIFTING CAPACITIES

When an excavator is used to lift loads in Europe, it must comply with EN 474-1. Install the following devices, and then turn on the overload warning switch before starting the lifting operation:
- Lifting device
- Lifting safety device

The lifting safety device must include two emergency shut-off valves, one for the boom and the other for the arm.
If the blade is used as an outrigger when lifting loads, the blade cylinder must be equipped with an emergency shut-off valve. Refer to “Lifting safety device (If equipped)” on page 2-97.

Rated lift capacity chart
- The loads in the charts do not exceed 87% of hydraulic lift capacity or 75% of tipping load.
- Figures marked with an asterisk (*, ※) are hydraulically-limited capacities.
- The bucket mass is excluded.
- The mass of slings and any other lifting devices shall be deducted from the rated load to determine the net load that may be lifted.
- The load point is the bucket hinge pin.
- The bucket cylinder is fully extended.
- Unit: kg (lbs)

Lifting device (If equipped)

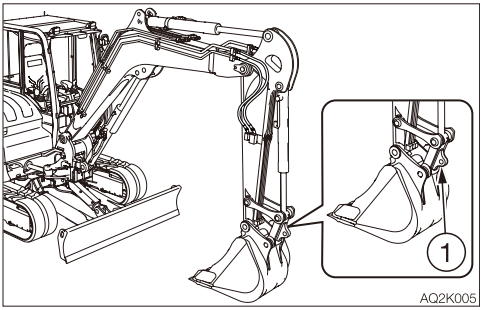

When lifting loads, install the sling on the lifting device (1).

Load hooking system
A load hooking system must be provided with the following capabilities.
1. A system which can withstand two-and-a-half times the rated lift capacity no matter at what position the load is applied.
2. A system that poses no risk of the lifted load falling from the hooking device. For example, equipped with a hook slippage prevention device.
3. A system that poses no risk of the hooking system slipping from the hoe attachment.

Inspection before lifting loads
Before lifting loads, inspect the following items to ensure there is no abnormality:

- Inspect for any damage to the attachment, hose or lifting device.
- Confirm that the overload warning device operates.
  Turn on the overload warning switch, and then fully raise the boom. If the horn is sounded, the overload warning device is normal.

⚠ WARNING

- **Do not attempt to lift or hold any load that is greater than these rated values at their specified load radii and height.**
- **The rated lift capacities are based on the machine being level and situated on a firm supporting surface. For safe lifting, the operator is expected to make due allowance for the particular job conditions such as soft or uneven ground, non-level condition, load to the machine sides, hazardous conditions, experience of personnel, etc. The operator and other personnel should fully acquaint themselves with the operator's manual furnished by the manufacturer before operating this machine. When operating the machine, the safety rules of the equipment must also be followed.**
- **Do not travel while lifting a load; It is very dangerous.**
- **Do not lift loads when the boom is being swung to the right or left. Doing so could cause the machine to tip over.**

<Cab> Long arm

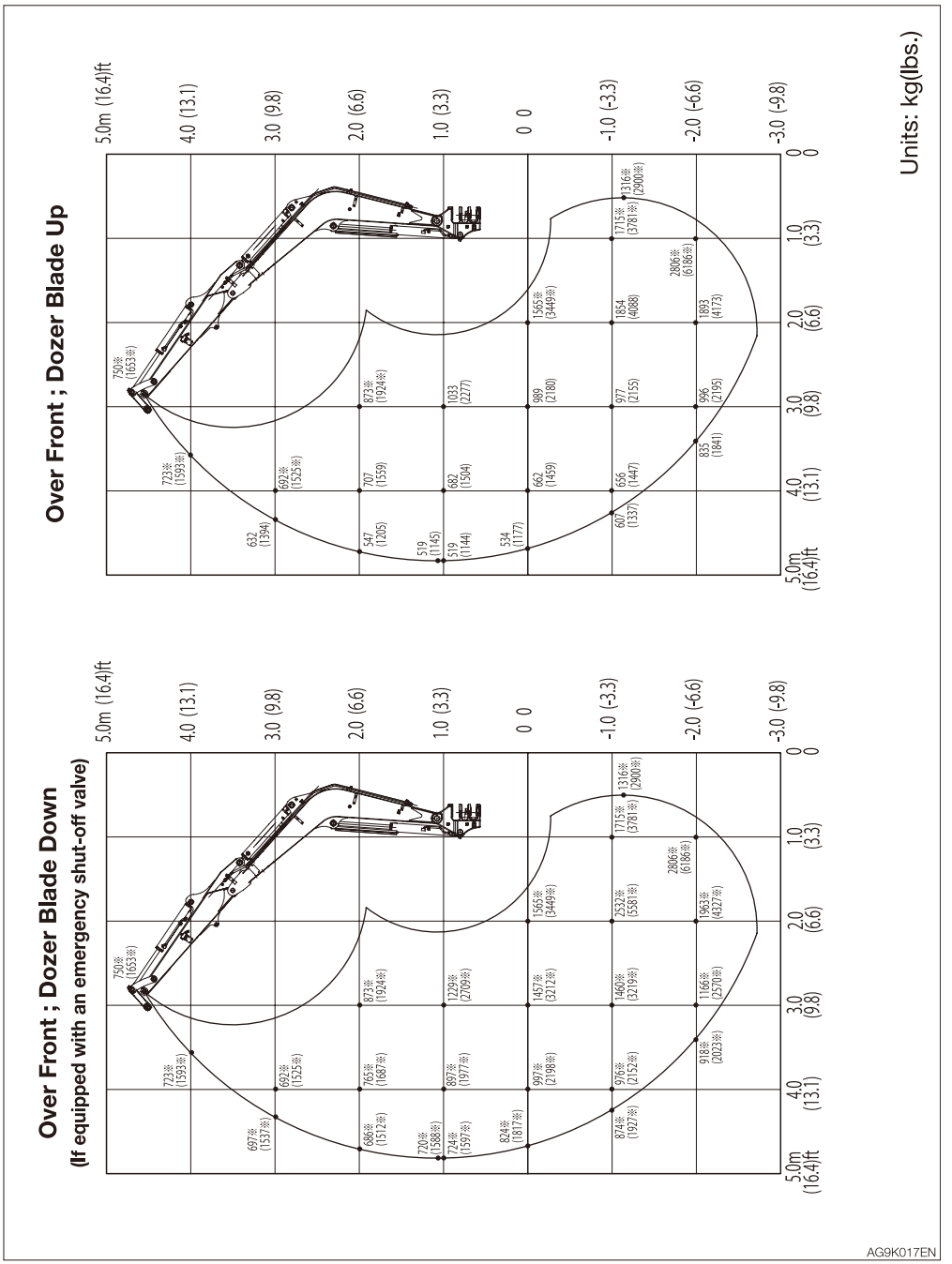
Over Front ; Dozer Blade Down
(If equipped with an emergency shut-off valve)
Over Front ; Dozer Blade Up
Units: kg(lbs.)
5.0m (16.4)ft
4.0 (13.1)
3.0 (9.8)
2.0 (6.6)
1.0 (3.3)
0
-1.0 (-3.3)
-2.0 (-6.6)
-3.0 (-9.8)
5.0m (16.4)ft
4.0 (13.1)
3.0 (9.8)
2.0 (6.6)
1.0 (3.3)
0
AG9K017EN

<Cab> Long arm

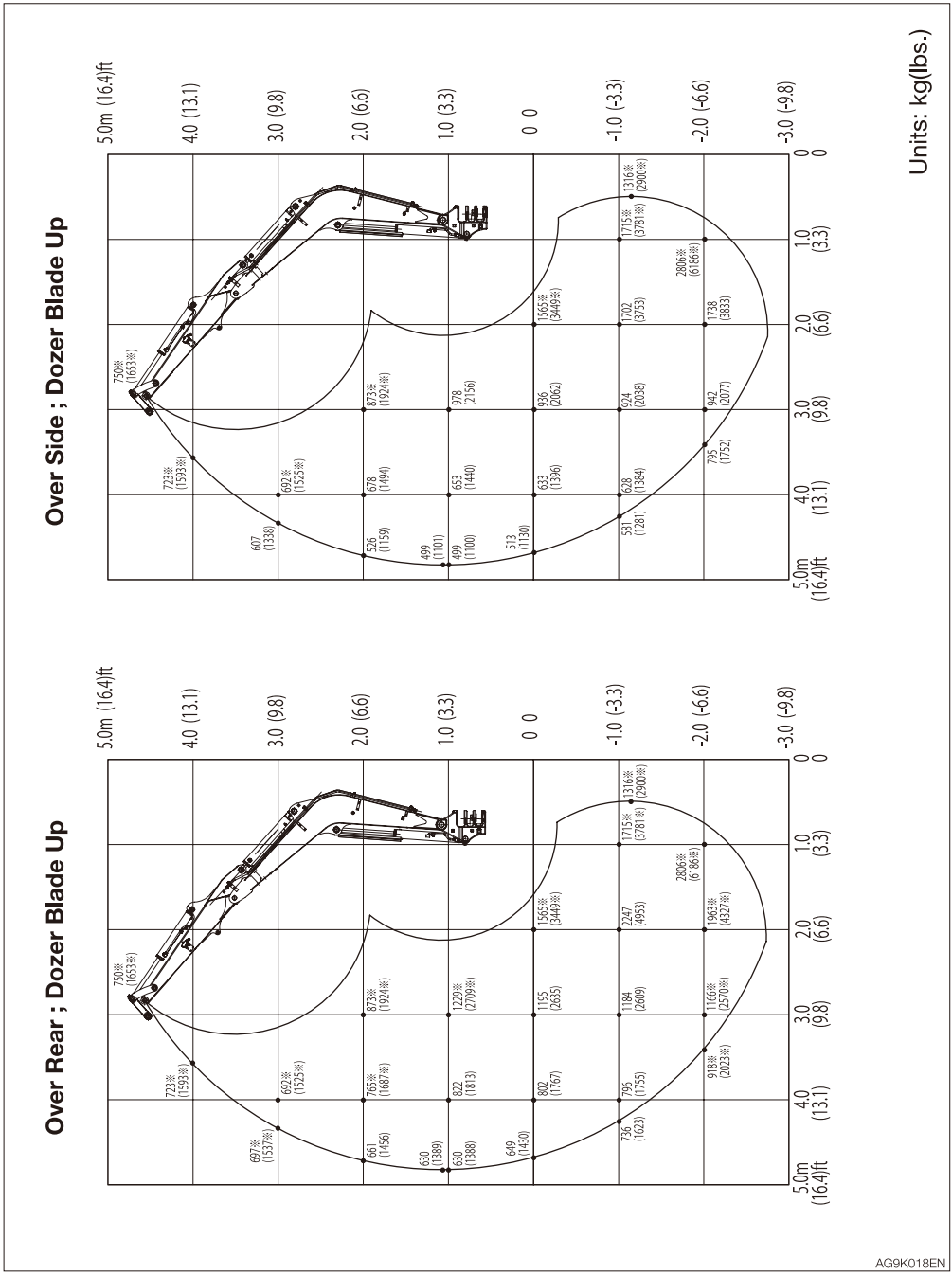
Over Rear ; Dozer Blade Up
Over Side ; Dozer Blade Up
Units: kg(lbs.)
5.0m (16.4)ft
4.0 (13.1)
3.0 (9.8)
2.0 (6.6)
1.0 (3.3)
0
-1.0 (-3.3)
-2.0 (-6.6)
-3.0 (-9.8)
5.0m (16.4)ft
4.0 (13.1)
3.0 (9.8)
2.0 (6.6)
1.0 (3.3)
0
AG9K018EN

<Canopy> Long arm

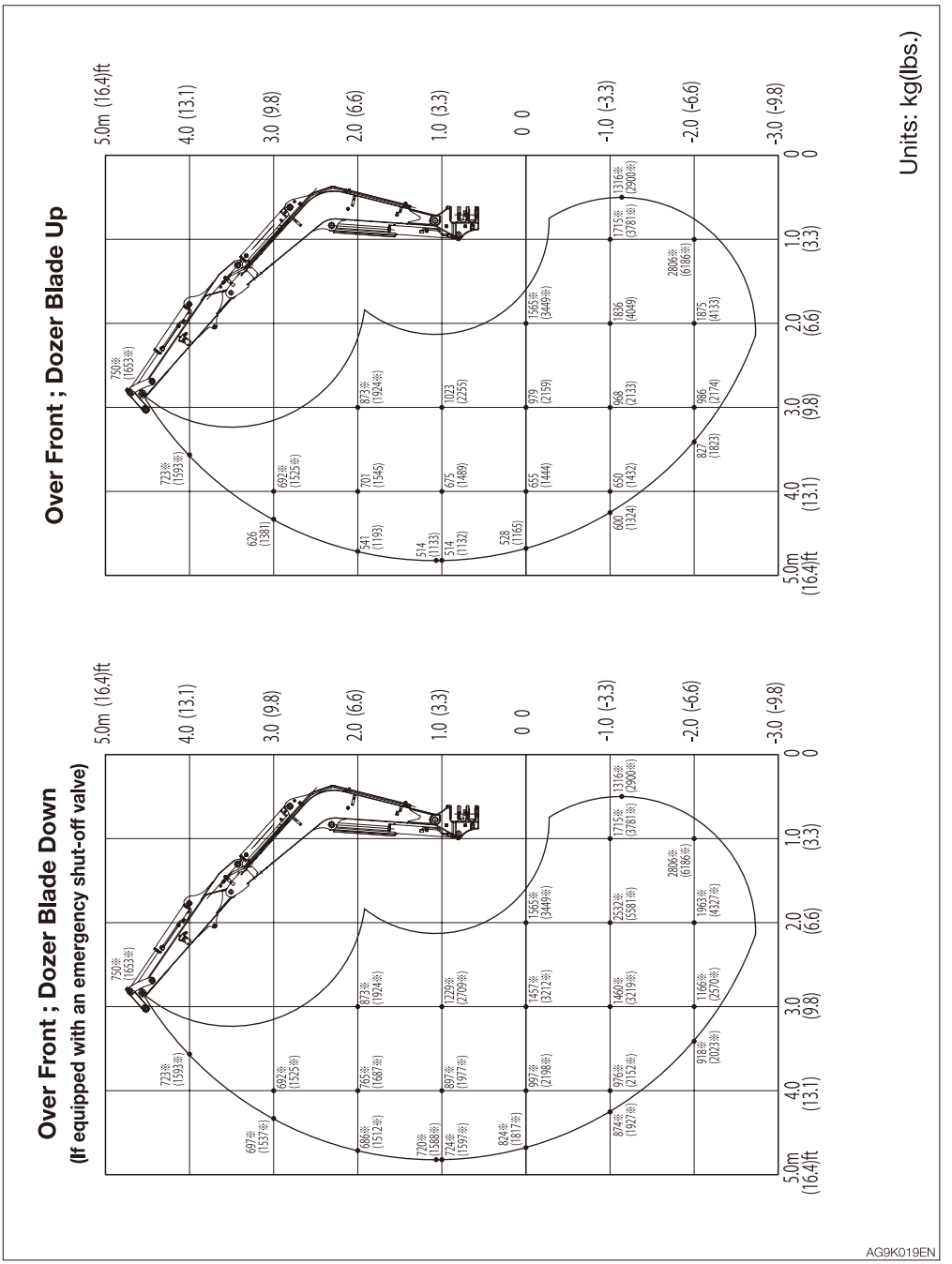

<Canopy> Long arm

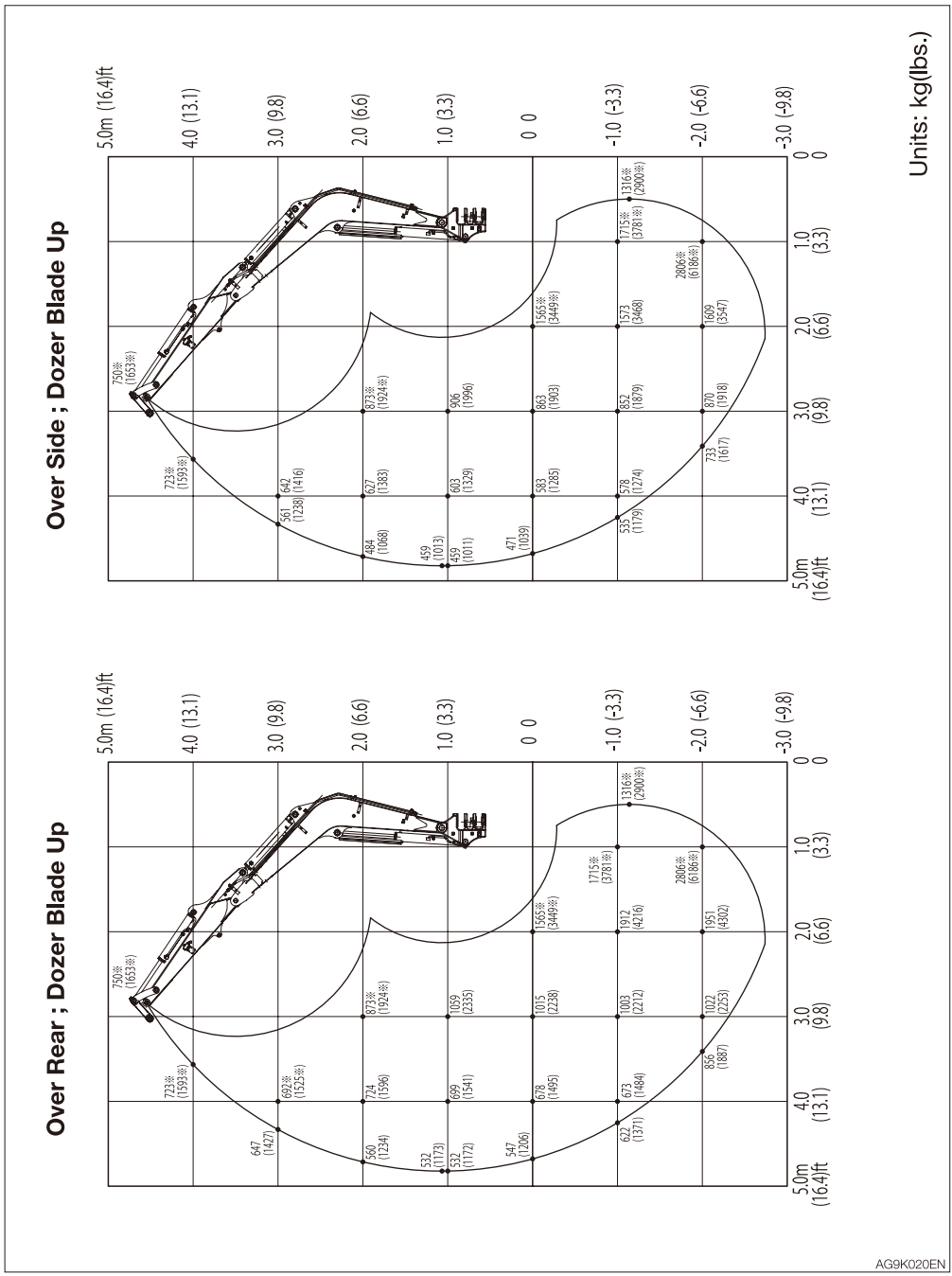

<Cab> Middle arm

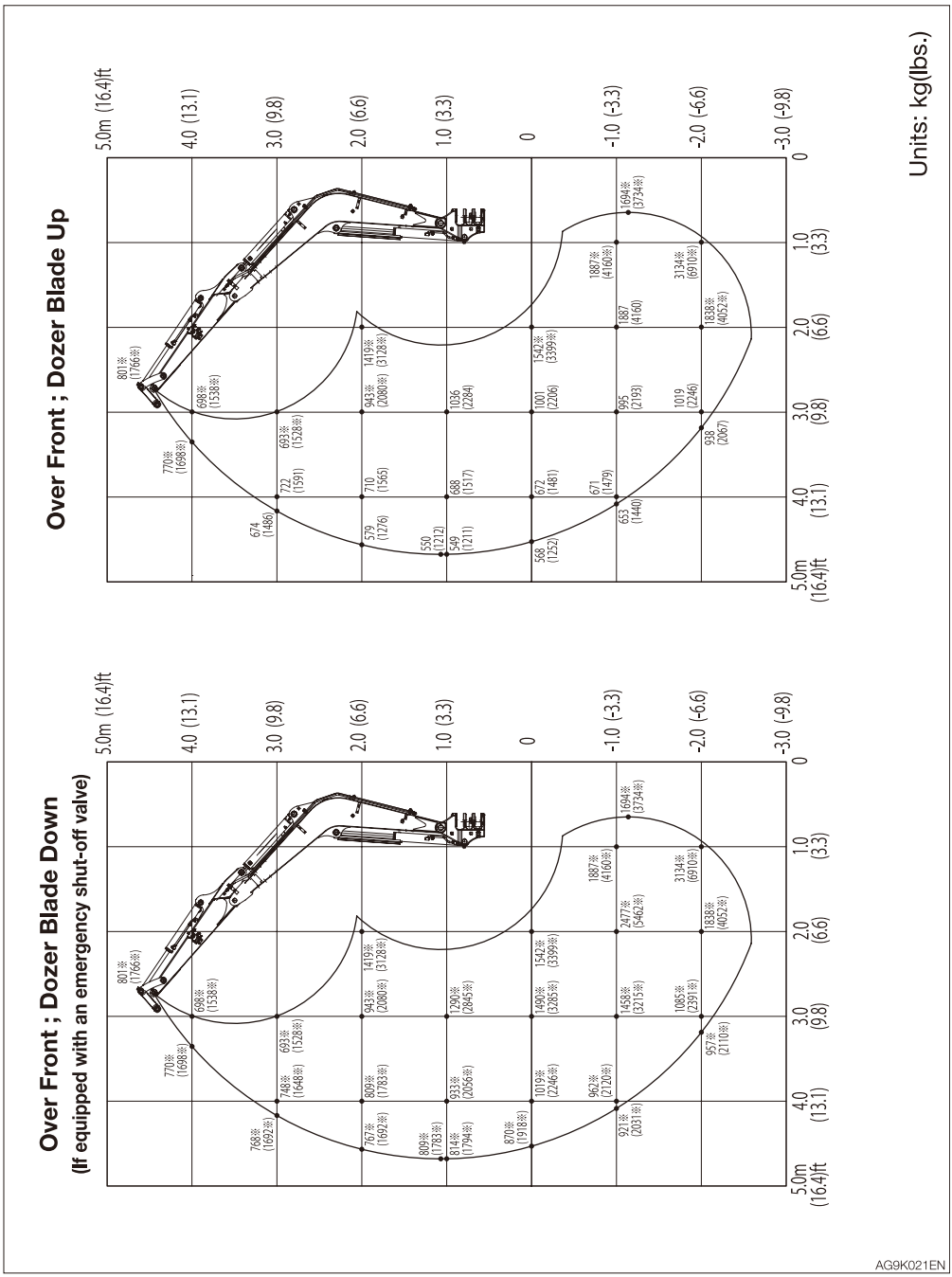

<Cab> Middle arm

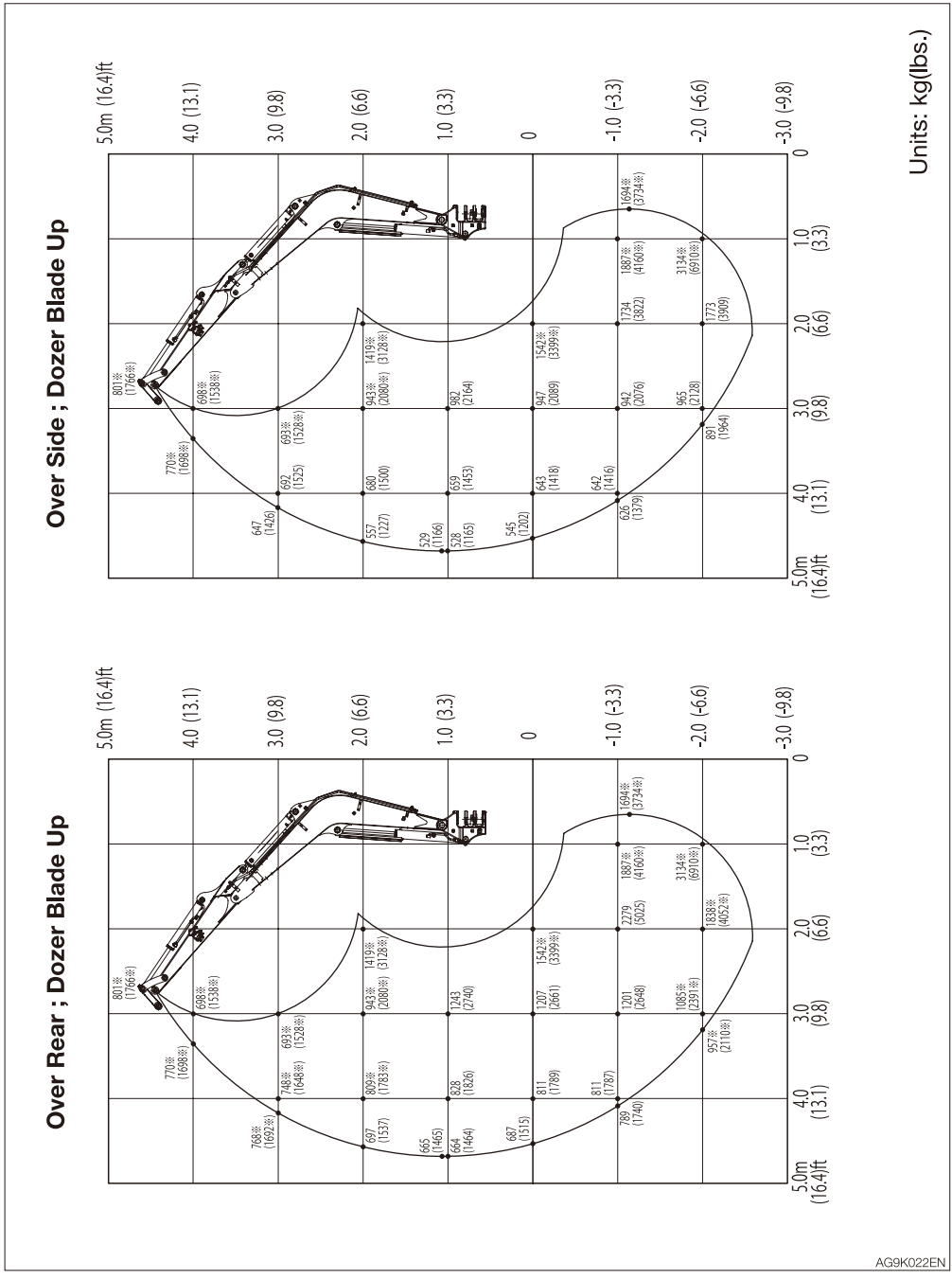

<Canopy> Middle arm

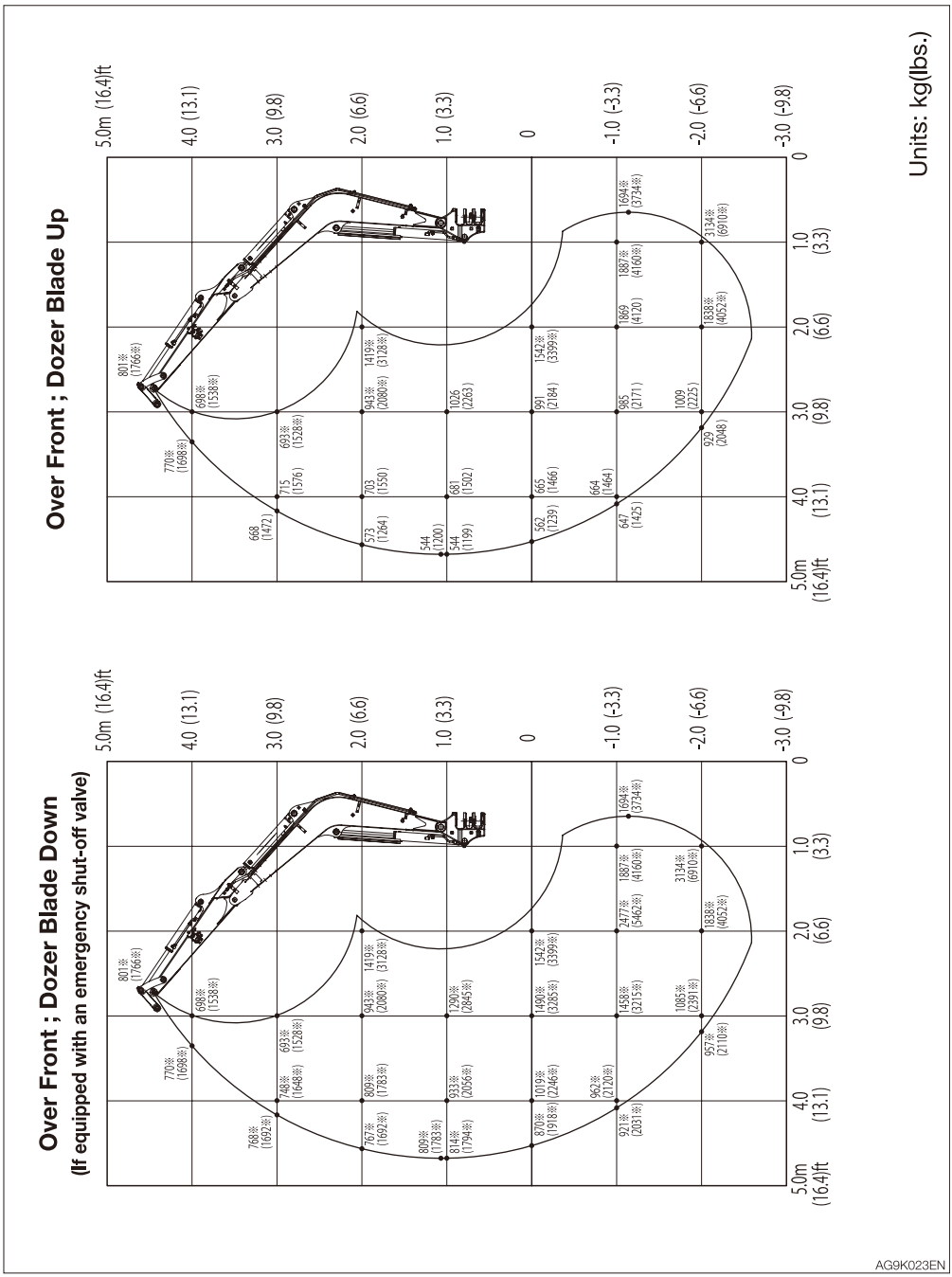

<Canopy> Middle arm

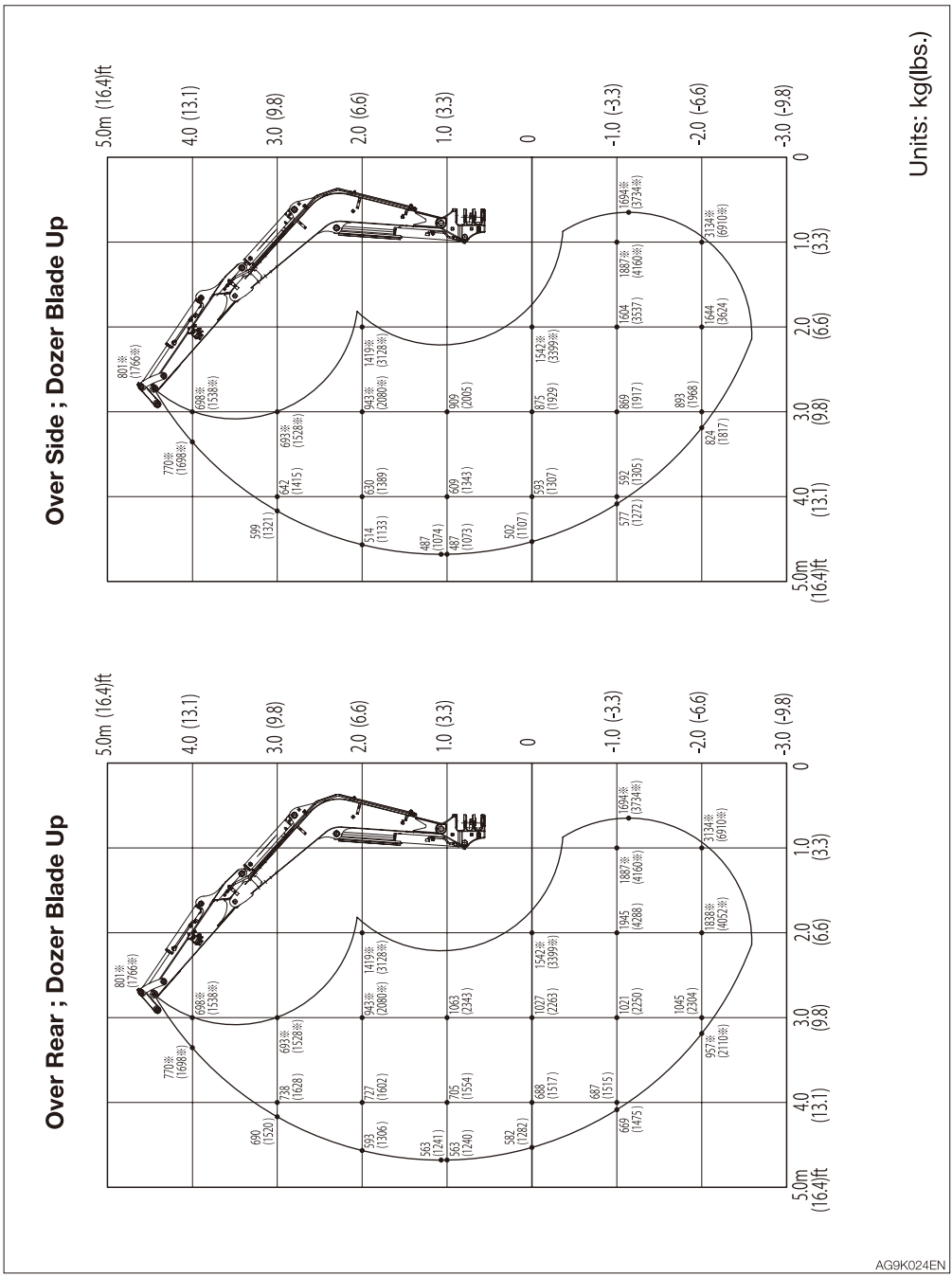

OPTIONS

GENERAL PRECAUTIONS

SAFETY PRECAUTIONS

⚠ WARNING

When removing or installing an attachment or optional part, take the following precautions.

- Consult with Takeuchi before installing an optional attachment.
- Do not use any attachments not approved by Takeuchi. Doing so may cause safety problems. Or, it may adversely affect the machine's operation or service life.
- We will not be held responsible for any injuries, accidents or damage to its products caused by the use by a non-approved attachment.
- Select a firm, level work area. Also, be sure to park in a well ventilated place.
- Clear obstacles and dangerous objects, and clean up spilled fuel immediately.
- When lifting, be sure to designate a person to act as a signalman. Follow the instructions of the signalman regarding the procedure and measures.
- When it is necessary to temporally place a heavy object or an attachment on the ground during removal or installation, be sure to place it in a stable position.
- Keep everyone out of the area when lifting. There is a hazard of objects falling or contacting with people in the area.
- Use a crane to move heavy objects (25 kg (55 lb.) or greater).
- Before removing a heavy object, be sure to put a support to it. When lifting with a crane, pay attention to the center of gravity of the load to keep the machine in balance.
- Do not operate the machine while the load is lifted by a crane stand.
- Use the proper procedure when mounting a boom or arm; otherwise serious damage could result. Consult your sales or service dealer for help.

CAUTIONS WHEN INSTALLING ATTACHMENTS

Be sure to perform a test operation after an optional or other special attachment has been replaced. Inspect the hydraulic oil level and recharge it as necessary. Consult your sales or service dealer for detailed procedures on installing/removing attachments.

CAUTIONS WHEN OPERATING ATTACHMENTS

⚠ WARNING

Long attachments reduce stability of the machine. The machine may tip over if it loses the balance when traveling or slewing on slopes.
Never perform the operations listed below as they are extremely dangerous.

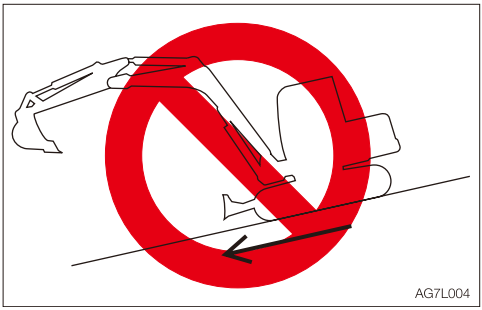

- Traveling down the slopes with the attachment raised



- Traveling across slopes

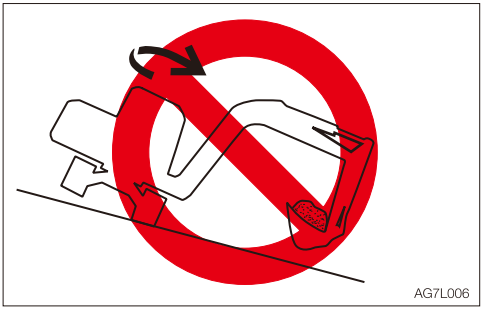

- Slewing on slopes
- If there is a heavy attachment is installed, the machine takes longer distance than usual to come to a complete stop when the stopping operation is performed. Carefully judge the distance so as not to bump into an object around the machine. Keep a safe distance from surrounding obstacles. When a heavy attachment is installed, natural drop (the gradual dropping of the attachment under its own weight when it is stopped in midair) increases.
- The machine can tip over more easily in the lateral direction than in the longitudinal direction.
  - Do not slew sideways with a heavy load at the how attachment. In particular, do not slew sideways on slopes.
  - The attachment is heavier for machines equipped with breakers or crushers than for machines equipped with the standard bucket. Do not operate such machines sideways, especially digging downhill.
- When a long arm is installed, the operating range increases. Carefully judge the distance so as not to bump into an object around the machine. Keep a safe distance from surrounding obstacles.

ATTACHMENT COMBINATION TABLE

The table below shows which bucket should be installed when the machine is using a standard arm, middle arm or long arm. Select a proper bucket by following the table.

⚠ WARNING

- **Consult with Takeuchi before installing an optional attachment.**
- **Do not use any attachments not approved by Takeuchi. Doing so may cause safety problems. Or, it may adversely affect the machine's operation or service life.**
- **We will not be held responsible for any injuries, accidents or damage to its products caused by the use by a non-approved attachment.**
- **The swing stopper must be installed when a bucket wider than a 630W (standard) bucket is installed. Failure to do so may result in the bucket hitting the machine body.**

√ :Can be used.
Δ :Can be used only for light operations (digging and loading of dry and loose soil or mud)
— :Cannot be used.
Total bucket mass = Bucket mass + Heaped bucket load (specific gravity: 1.8)

Bucket	Rated capacity m^3 (cu.yd.)	Bucket cutting width mm (inch)	Middle arm 1450 mm (57.1 in.)	Long arm 1600 mm (63 in.)
630 W (S.T.D.)	0.12 (0.14)	630 (24.8)	√	√
Total bucket mass= Within 293 kg (646 lb.)		Within 630 (24.8)	√	√

SELECTING A LEVER PATTERN

The operating pattern of the left and right operating levers can be changed.

⚠ WARNING

Before starting the engine, check the selector to see which operating pattern the left and right operating levers are set.

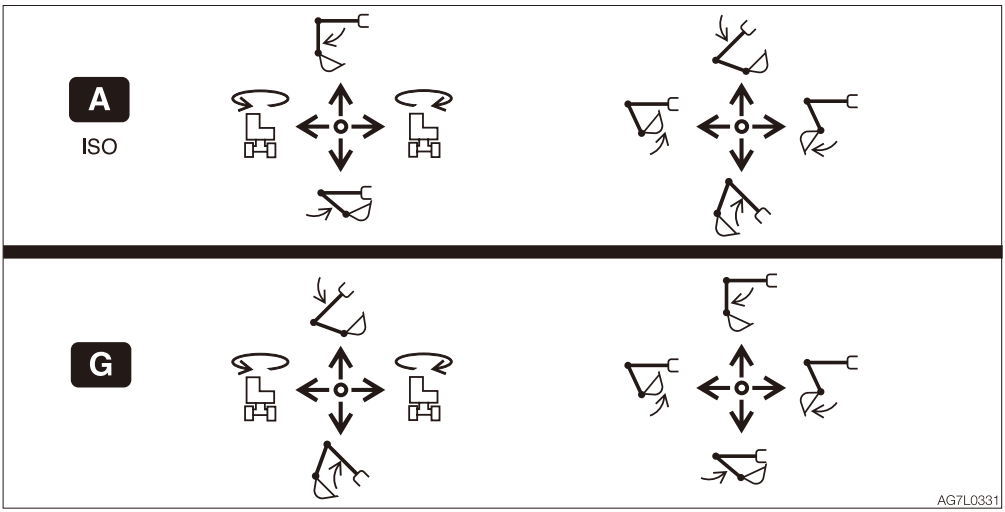

SWITCHING THE LEVER PATTERN

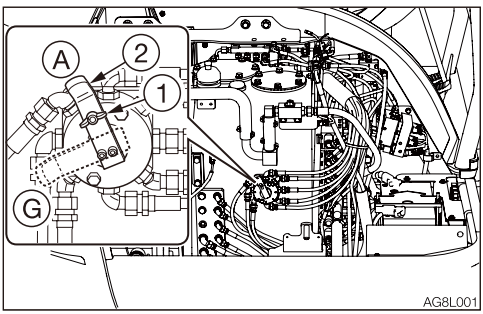

(A) : ISO pattern
(G) : G pattern

1. Park the machine on a flat and rigid ground, and stop the engine.
2. Open the right side cover.
3. Loosen the wing bolt (1).
4. Turn the selector valve lever (2) to change the pattern.
5. Tighten the wing bolt (1) and fasten the lever (2) in place.
6. Close the right side cover.
7. Confirm the lever pattern.

HYDRAULIC BREAKER

For handling of the breaker, read the hydraulic breaker's manual, provided separately.

IMPORTANT: When installing an attachment, make sure that it is appropriate for the machine being used. Contact your sales or service dealer for advice on selecting attachments.

CAUTIONS ON OPERATING

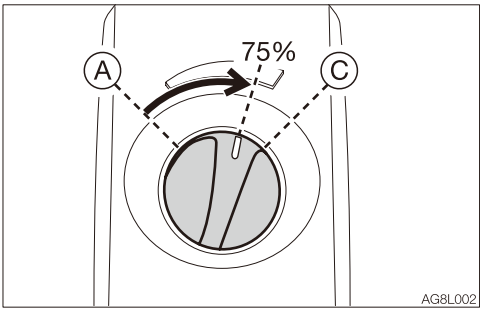

- Start the engine and run it at 75% of the maximum speed.

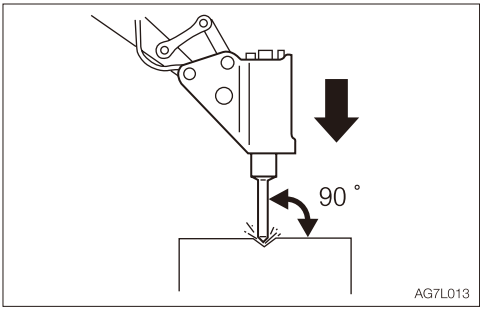

- Pound with the chisel pressed perpendicular to the surface to be pounded.
- When pounding, press the chisel properly against the object to be broken so as to avoid pounding the air.

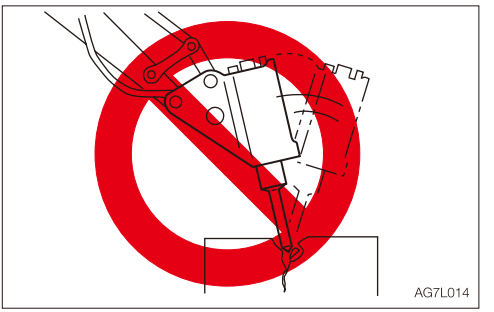

- Do not pry with the chisel or do not pry while pounding.
- Do not move the chisel while pounding.
- Do not pound continuously for over 30 seconds on the same surface.



- Do not pound with the cylinder fully extended or retracted (at the stroke end). Leave a margin of at least 50mm(2 in).

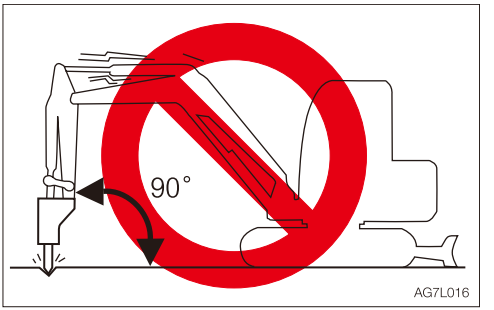

- Do not pound with the arm placed perpendicular to the ground surface.

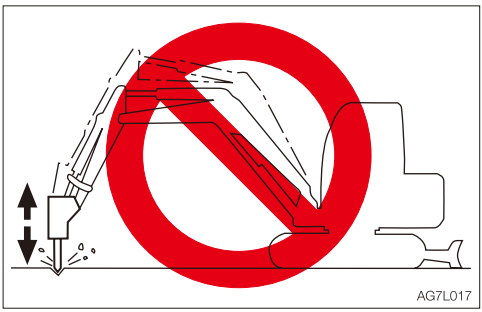

- Do not drop the breaker itself on the object to be broken in order to break it.
- Do not move objects to be broken or rocks with the breaker itself.
- Slew the machine occasionally to cool the engine.
- If a hydraulic hose is vibrating abnormally, nitrogen gas may be leaking from the accumulator. Ask for an inspection early.

REPLACING THE HYDRAULIC OIL REGULARLY

When a hydraulic breaker is used, the oil deteriorates more quickly than that used for a usual operation. Be sure to replace the hydraulic oil and the return filter elements.

- Failure to replace these in time can lead to damage to the machine and the breaker hydraulic system. To improve the service life of the hydraulic systems, be sure to replace the hydraulic oil and return filter element after the number of hours shown on the diagram below.
- When replacing the hydraulic oil, clean the suction strainer.

Replacement interval (hours)

Item	Hydraulic oil	Filter element
1st time	—	25
2nd time	—	100
Periodically	1200 (600)	200

When the breaker operating ratio is 100%.

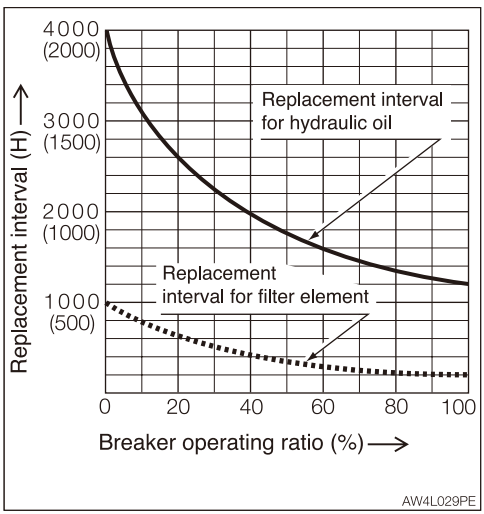

( ): When using conventional antiwear hydraulic oil.

TRAVEL ALARM

The alarm sounds while the machine is traveling and stops when the machine stops traveling.
If the alarm does not sound when the machine travels, the fuse may be blown. Inspect the fuses.

⚠ WARNING

If the fuse blows again soon after replacement, then the electric system is likely faulty. It may pose a fire hazard if not properly repaired. Contact your sales or service dealer for advice.

1. Turn the starter key to the OFF position to stop the engine.

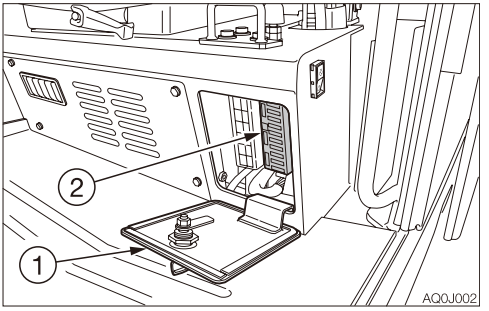

2. Open the fuse box cover (1).
3. Check for any blown fuses (2).

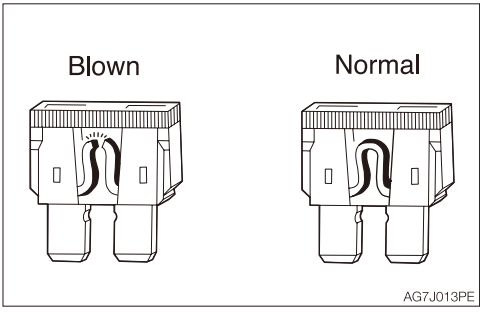

4. If a fuse is blown, replace it with a spare fuse of the same capacity.

Fuse layout and circuits protected

<Cab>

Capacity	Symbol	Protected circuit
5A		Switch lighting
10A		Horn
10A		Starter switch
10A		Immobilizer
20A		Light
10A		Wiper
20A		Lever lock
10A	CTL (2)	Controller power supply (2), **Travel alarm**
10A	SOL	Solenoid
20A	CAB	Cab interior power supply
25A	OPT	Option
10A		Compressor
10A		Feed pump
30A		Air conditioner blower motor
20A	CAB	Cab light
20A	CTL (1)	Controller power supply (1)

<Canopy>

Capacity	Symbol	Protected circuit
5A		Switch lighting
10A		Horn
5A		Starter switch
10A		Immobilizer
20A	 (1)	Light (1)
20A		Lever lock
15A	CTL 	Controller power supply, **Travel alarm**
25A	SOL 	Solenoid
20A	OPT (1)	Option (1)
25A	OPT (2)	Option (2)
10A		Feed pump
15A	 (2)	Light (2)

OPTIONAL EQUIPMENT MASS

OPTION	
Steel crawler (Including shoe guide)	105 (230)
Angle blade	52 (115)
Long arm	8 (18)
Roof guard (Level II: ISO 10262)	47 (104)
Front guard (Level II: ISO 10262)	42 (91)

Units: kg (lb)

*: Mass of optional equipment is added to the standard machine mass.
*: This table only contains the optional equipment of 10kg (20lb) or more in mass.

BIODEGRADABLE OIL

Biodegradable oil is a new type of hydraulic oil that is decomposed into carbon dioxide and water by microorganisms in the soil and water. It is highly safe for living organisms and offers advantages in term of environmental protection.

- Recommended biodegradable oil: Mobile EAL Envirosyn 46H (an ester synthetic oil) and Panolin HLP Synth 46 (an ester synthetic oil).
  When replacing the mineral oil with biodegradable oil, use either of the above brand oil.
  Note that there are oils of other brands, even among ester synthetic oils, which may damage O-rings, packings and seals.
- When switching from a mineral oil to a biodegradable oil, the parking brake torque decreases by about 30%.

REPLACING THE MINERAL OIL WITH BIODEGRADABLE OIL

- A mixture of mineral oil and biodegradable oil or a mixture of different brands of biodegradable oils will result in a decrease in performance of the hydraulic oil, biodegradability and safety. The inside of the hydraulic oil system must be flushed (cleaned) before replacing. The residual mineral oil in the machine should be about 2% or less, as complying with the ISO 15380.
- This operation is dangerous and requires experience. Ask a Takeuchi sales or service dealer for help.

Flushing

To be performed by a Takeuchi sales or service outlet

1. Drain the hydraulic oil (mineral oil) from the hydraulic oil tank and clean the inside of the tank and suction strainer.
   Refer to “Replacing the hydraulic oil and cleaning the suction strainer” on page 5-52.
2. Remove the cylinder hoses and drain the hydraulic oil (mineral oil) from inside the cylinders.
3. Supply new biodegradable oil to the hydraulic oil tank.
4. Bleed the air from the hydraulic oil system.
5. Operate the hydraulic devices for 30 minutes.
6. Drain the biodegradable oil from the tank and cylinders.
7. Replace the hydraulic oil return filter with a new filter.
8. Repeat steps 3 and 4.
9. Operate the hydraulic devices for 30 minutes.
10. Drain the biodegradable oil from the tank and cylinders.
11. Repeat steps 3 and 4.
12. Operate the hydraulic devices for 1 hour.
13. Drain the biodegradable oil from the tank and cylinders.
14. Replace the return filter with a new filter.
15. Repeat steps 3 and 4.
16. Operate the hydraulic devices, then check for oil leakage.

There is no need to flush the hydraulic oil system when switching from biodegradable to mineral hydraulic oil.

CAB OPTIONS

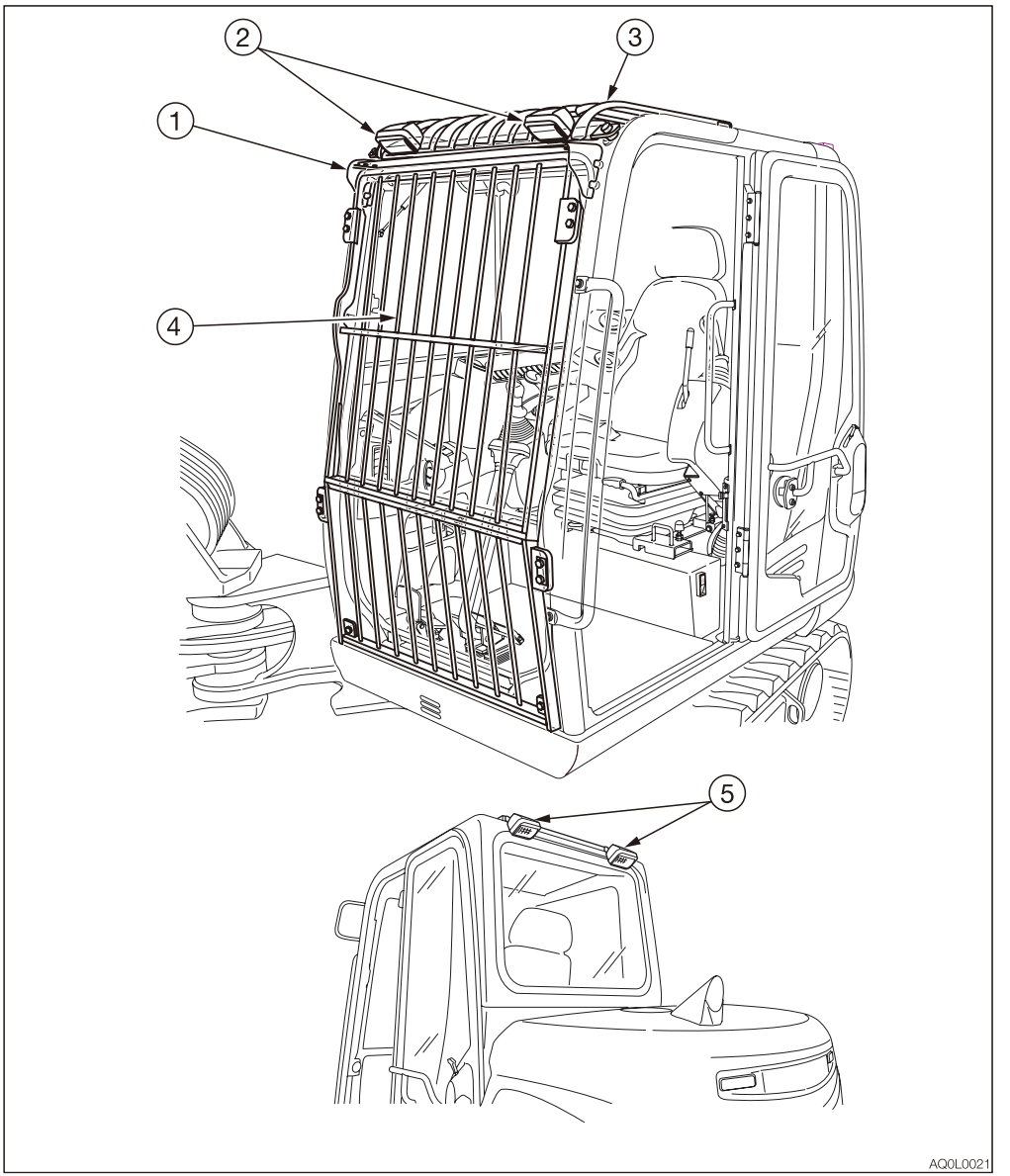

1. Rain guard
2. Front light
3. Roof guard (Level II: ISO 10262)
4. Front guard (Level II: ISO 10262)
5. Rear light

ANGLE DOZER BLADE

⚠ WARNING

- **Do not press the float button while the machine is raised by the dozer blade. Doing so will cause the machine to fall. If you must work beneath the raised machine, always use a secure support to keep the machine raised.**
- **Do not press the float button while the dozer blade is raised. Doing so will cause the dozer blade to fall. Lower the dozer blade to the ground before pressing the float button.**
- **Do not travel forward while the dozer blade is in the float mode.**

IMPORTANT: Do not raise the machine by using the angled dozer blade. Or, the dozer blade may be damaged due to the load concentrated onto a point on the dozer blade.

This dozer blade can be angled (to 25° right or left). Also, it can be used in the float mode.

Angle operation

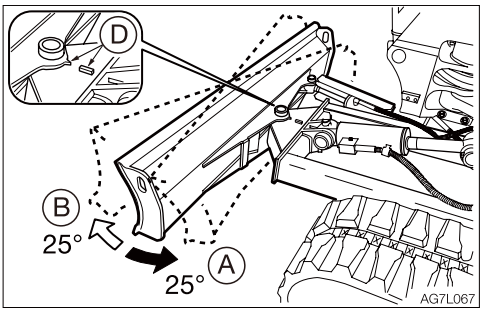

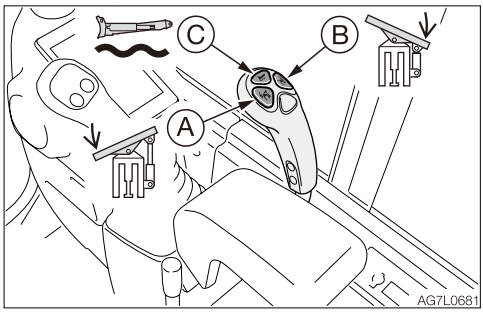

Button (A) .....Left angle (0 to 25°)
Button (B) .....Right angle (0 to 25°)
The dozer blade angle is increased/decreased between 0 and 25° as long as the button is pressed.
To position the dozer blade at a right angle, align the matching marks (D) as shown in the figure.

Float operation

Button (C).....Float mode
To cancel the float mode, press the button again.

Daily inspection (every 10 hours)
Lubricating

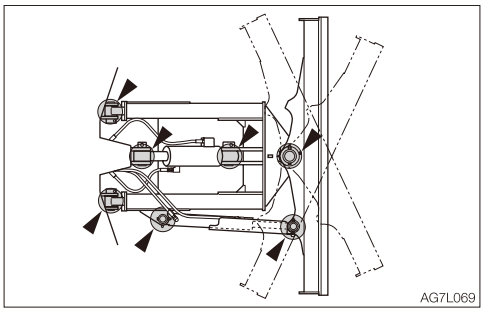

1. Lower the working equipment to the ground and stop the engine.
2. Use the grease gun to lubricate the grease fitting.
3. Wipe off the excess grease.

SPECIFICATIONS

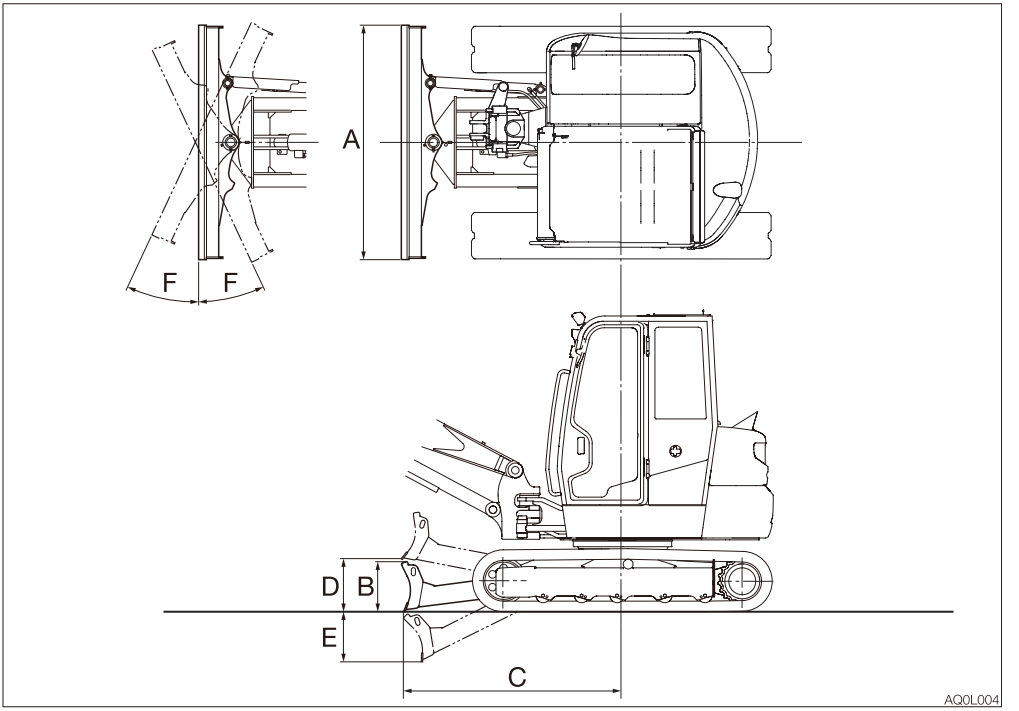

	Item	Rubber crawlers
A	Dozer blade width	1740 (68.5)
B	Dozer blade height	400 (15.7)
C	Dozer blade distance to axis of rotation	1655 (65.2)
D	Dozer blade maximum lifting	410 (16.1)
E	Dozer blade maximum lowering	385 (15.2)
F	Angle degree (Left/Right)	25°

Unit: mm (inch)

OPERATING LEVER SWITCH KIT 1

HORN BUTTON

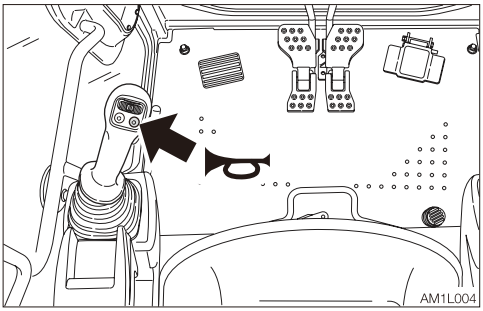

Press the button situated on the left operating lever to blow the horn.

DECELERATION BUTTON

⚠ WARNING

Before operating the deceleration button, set the operating lever to the neutral position and take your foot off the pedals. If the deceleration button is pressed while driving, the machine's operating speed will abruptly change to result in a dangerous situation.

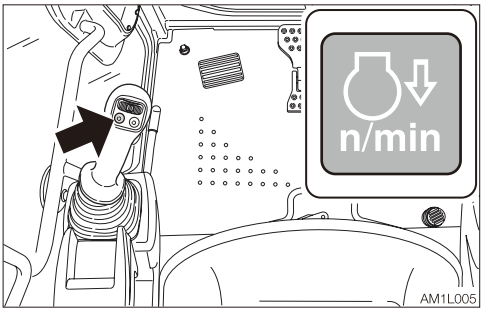

Press this button on the left operating lever to lower the engine speed to low idling. Press the button again to return to the engine speed set with the throttle controller.

For safety reasons, it is designed that the deceleration function is activated to set the engine revolutions to low idling whenever the engine is started.
Cancel the deceleration mode by pressing the deceleration button as necessary.

Note: This deceleration button is capable of decreasing the engine speed and reducing the fuel consumption, with a simple operation, in a situation such as when little engine output is required and thus the operating or the travel levers are in neutral.

TRAVEL SPEED BUTTON

⚠ WARNING

When a load greater than a set value is applied during traveling in 2nd (high) speed, the speed will automatically slow down to 1st (low) speed. When the load becomes lighter, the speed will increase and return to 2nd (high) speed. It should be noted that the travel speed changes depending on the load condition (for machines with the automatic travel shift-down system).

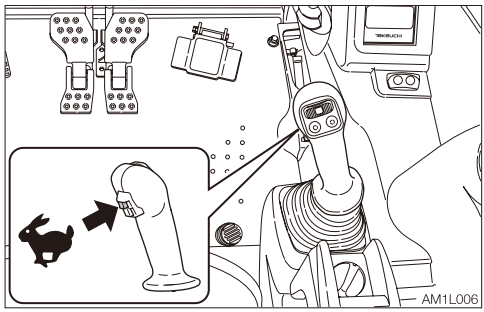

Press this switch to set the travel speed to 2nd (high) speed. Press it again to return to 1st (low) speed.

AUXILIARY 1ST SWITCHES

Auxiliary hydraulic buttons

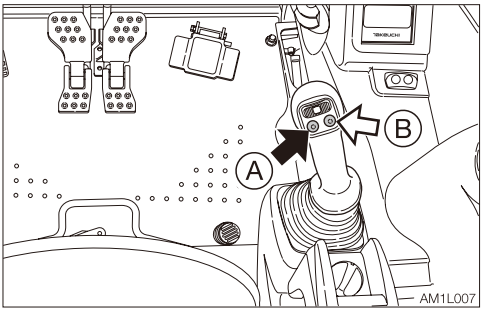

Press those buttons to control the flow of the oil in the first auxiliary hydraulic lines.

- Proportional control of the auxiliary hydraulic circuit is not possible.

(A).....Hydraulic oil flows to the left auxiliary line (a).

(B) .....Hydraulic oil flows to the right auxiliary line (b).

Slider switch (Proportional control)

Proportional control allows for slow-to-fast/ fast-to-slow movement of attachment. Example: If you move the slider switch half way, the attachment will move at approximately one-half the speed.

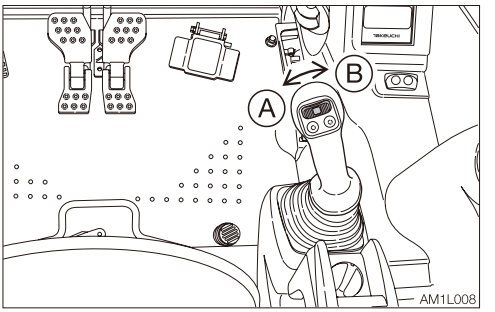

Move this switch to control the flow of the oil in the first auxiliary hydraulic lines.

(A).....Hydraulic oil flows to the left auxiliary line (a).

(B) .....Hydraulic oil flows to the right auxiliary line (b).

Refer to “Auxiliary hydraulic lines (If equipped)” on pages 2-90 to 2-95.

AUXILIARY 2ND/4TH SWITCH

Slider switch
(Proportional control)
Proportional control allows for slow-to-fast/ fast-to-slow movement of attachment.
Example: If you move the slider switch half way, the attachment will move at approximately one-half the speed.

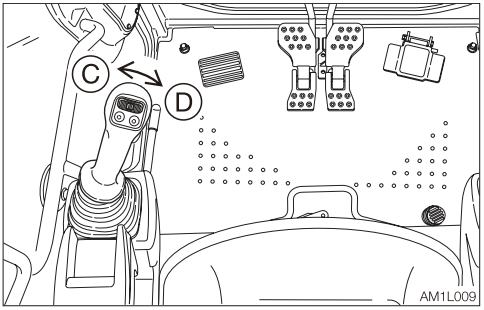

Move this switch to control the flow of the oil in the second auxiliary hydraulic lines.
(C): .....Hydraulic oil flows to the left auxiliary line (c).
(D): .....Hydraulic oil flows to the right auxiliary line (d).

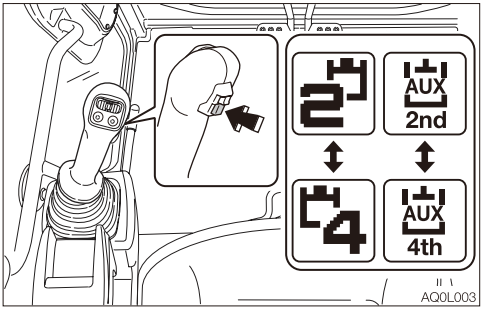

To use the auxiliary 4th hydraulic line, press the auxiliary 2/4 select button to change to the operation of the auxiliary 4th.
Refer to “Auxiliary hydraulic lines (If equipped)” on pages 2-90 to 2-95.

AUXILIARY 2/4 SELECT BUTTON

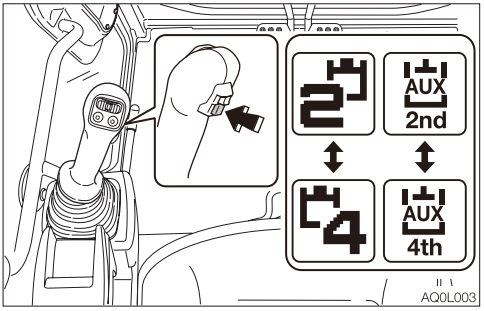

This button is used to change from the second auxiliary operation to the fourth auxiliary operation.
Pressing this button displays the second auxiliary on the display to indicate that the second auxiliary operation is enabled.
Pressing this button one more time displays the fourth auxiliary on the display to indicate that the fourth auxiliary operation is enabled.
The actual operation is performed with the auxiliary 2nd/4th switch (slider switch).

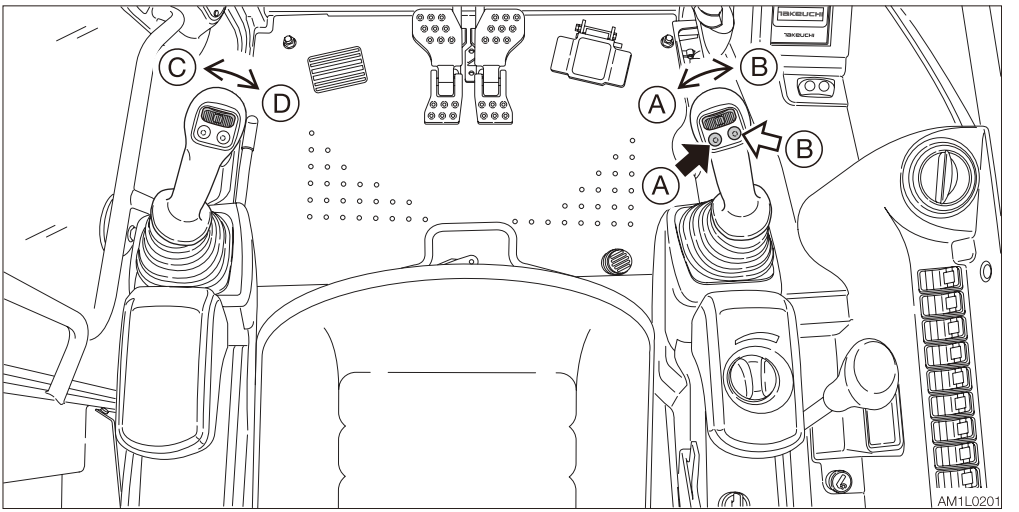

Operating

Press those buttons to control the flow of the oil in the first/second auxiliary hydraulic lines.

(A).....Hydraulic oil flows to left auxiliary line (a).

(B) .....Hydraulic oil flows to right auxiliary line (b).

(C) .....Hydraulic oil flows to left auxiliary line (c).

(D) .....Hydraulic oil flows to right auxiliary line (d).

Refer to “Auxiliary hydraulic lines (If equipped)” on pages 2-90 to 2-95.

Releasing the residual pressure

After the auxiliary hydraulic circuits have been used, pressure remains in the circuits. This is called the residual pressure. Release this residual pressure before disconnecting the lines.

Perform the residual pressure releasing within 10 minutes after the engine stopping.

1. Park the machine on a flat, rigid and safe ground.
2. Stop the engine.
3. Lower the safety lock lever to the unlocked position.
4. Turn the starter switch to the ON position.
5. Press the auxiliary hydraulic switches several times to release the residual pressure in the auxiliary hydraulic circuitry.

TAKEUCHI SECURITY SYSTEM

The Takeuchi Security System is a system that allows only registered starter keys to be used for starting the engine.
The engine cannot be started with any unregistered or counterfeit starter keys. If a registered starter key is lost or stolen, you can set the system to delete the registered key information, so that the lost or stolen key cannot be used to start the engine. Although machine theft cannot be completely prevented, the system certainly helps reduce the risk of theft.

STARTER KEY

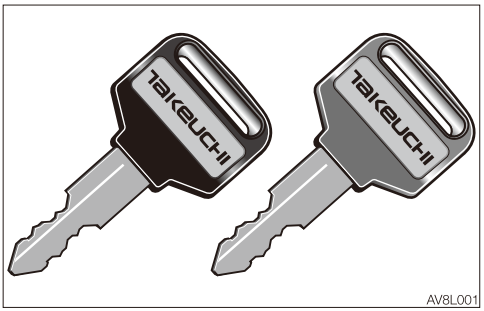

There are two types of starter key, red and black, which can be registered in the Takeuchi Security System.
The red key is the master key. The black key is the starting key.

STARTING THE ENGINE

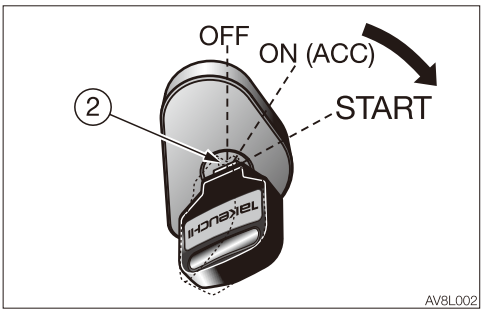

The engine can be started using the normal method with a registered BLACK key.
The engine cannot be started using the RED master key.
Refer to Chapter 3, “Starting and stopping the engine”.

If an attempt is made to start the engine with an unregistered key:

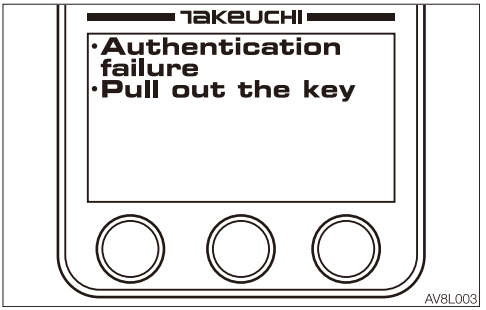

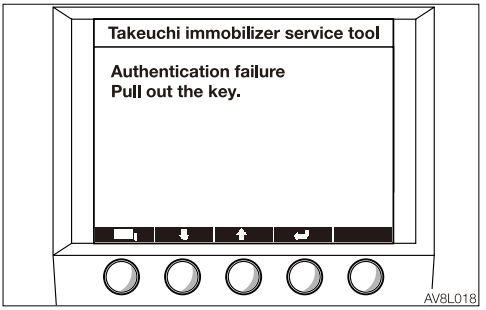

If an unregistered starter key is turned from the OFF to the ON (ACC) position, the message “Authentication failure” appears and the alarm starts sounding.
If this attempt is repeated five times in a row, the horn sounds for two minutes, and the engine cannot be started. The horn stops when the key is turned to the OFF position.

REGISTERING AND DELETING THE STARTER KEY

⚠ WARNING

- **Sit on the operator's seat.**
- **Raise the safety lock lever to the locked position.**
- **Clear all people from the machine and the area.**
- **Sound the horn to warn people around the machine.**

Registration may fail if the starter key is on a keyring or keychain; remove it before starting registration.
A malfunction could occur if multiple starter keys are brought near to the key cylinder. Be sure that no starter keys other than the correct key are near the key cylinder during registration.

Starter key registration procedure
For Steps 1 to 6 below, complete each step and proceed to the next one within five minutes. If no operation is performed for five minutes during this procedure, the system returns to the initial state.
From Step 7 onward, the system automatically ends the operation if no operation is performed for five minutes.

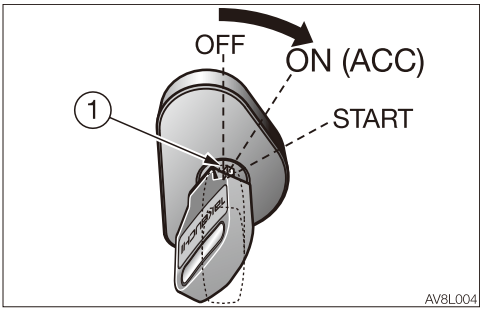

1. Insert the master key (1) into the starter switch and turn the key from the OFF to the ON (ACC) position.

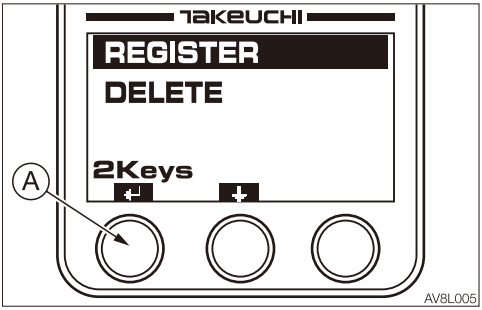

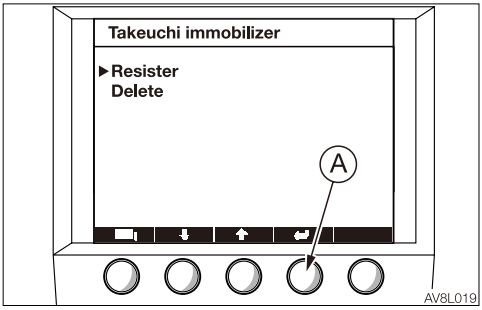

2. On the LCD, select “REGISTER” and press (A).

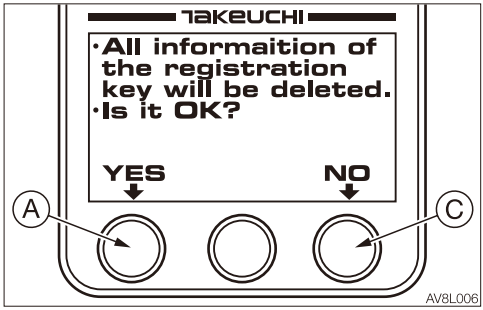

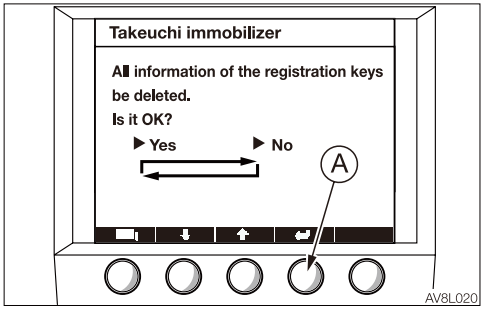

3. Select whether to delete all of the existing registration information.

<Canopy>

YES (A): All registration information will be deleted; register a new key.

NO (C): A new starter key registration will be added to the existing registration information.

Do not remove the master key (1) before making a selection, otherwise registration could fail.

<Cab>

On the LCD, select “YES” and press (A): All registration information will be deleted; register a new key.

On the LCD, select “NO” and press (A): A new starter key will be added to the existing registration information.

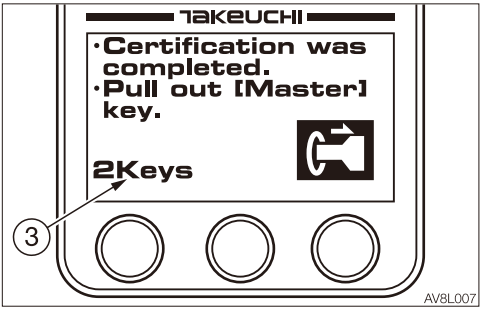

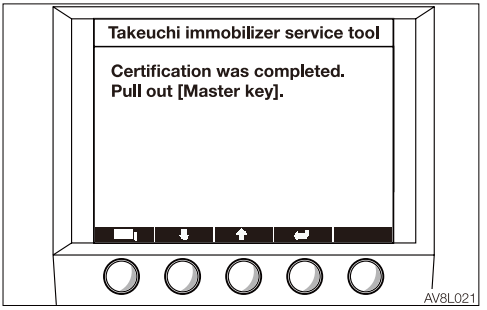

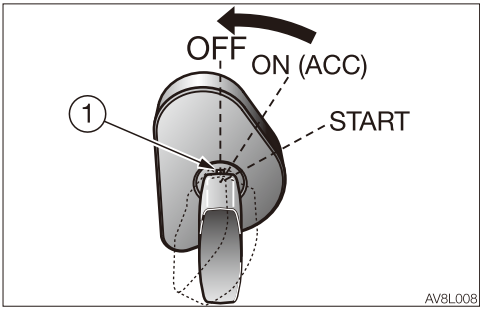

4. When the message “Certification was completed” appears on the LCD, turn the master key (1) from the ON (ACC) to the OFF position, and then remove it from the starter switch.
   The number (3) in the lower left indicates the number of starter keys currently registered (only for canopy). Up to 13 starter keys can be registered.

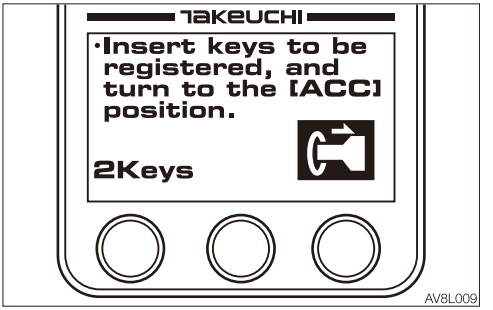

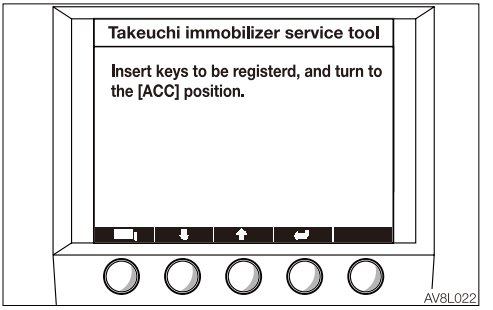

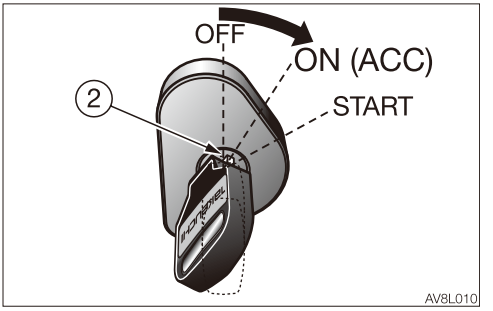

5. Insert the starter key (2) to be registered into the starter switch and turn the key from the OFF to the ON (ACC) position.

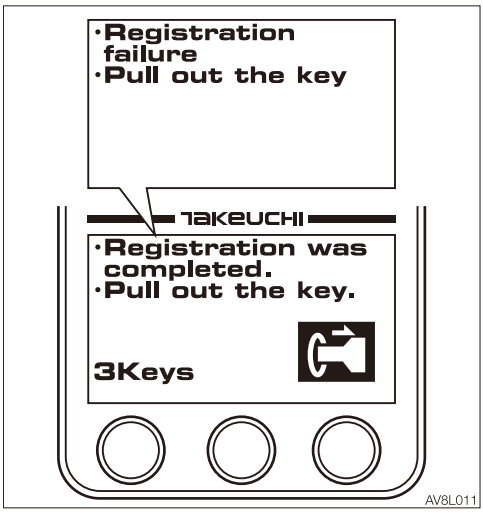

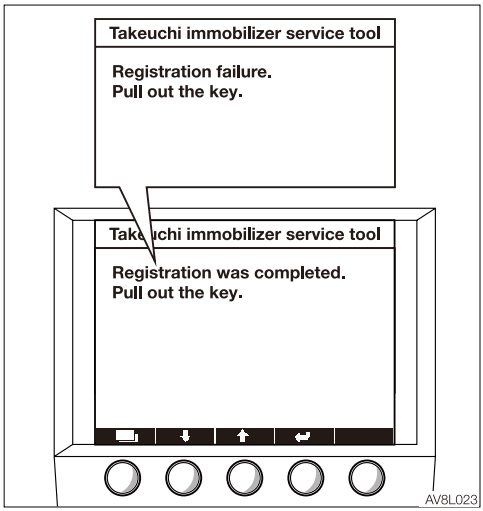

6. If the registration was successfully completed, the message “Registration was completed” appears. This means that the starter key (2) currently inserted has been registered.
   If the registration fails, the message “Registration failure” appears.

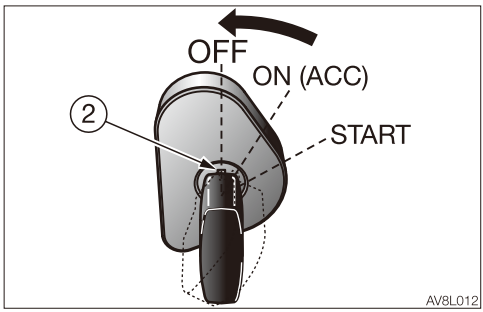

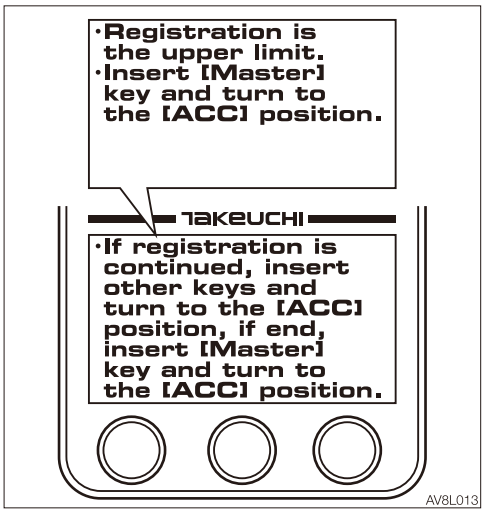

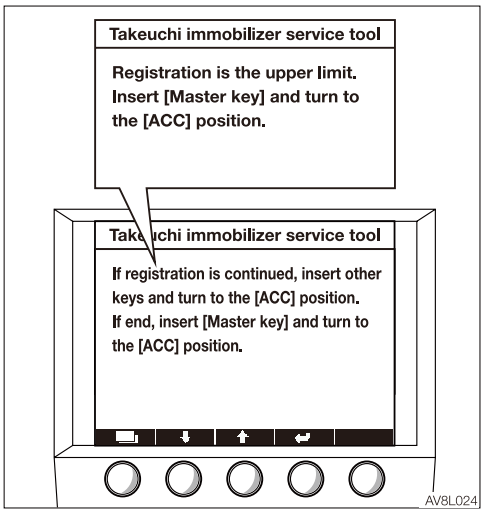

7. Turn the starter key (2) from the ON (ACC) to the OFF position, and then remove it from the starter switch.

To continue registration, repeat the steps from Step 5.
To end registration, proceed to Step 8.

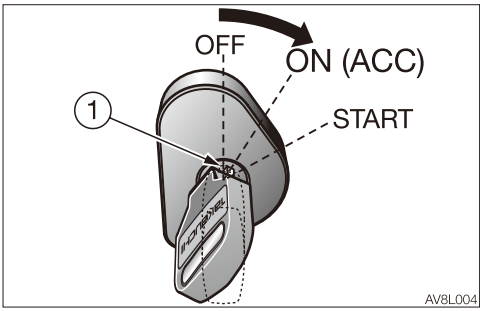

8. Insert the master key (1) into the starter switch and turn the key from the OFF to the ON (ACC) position. Or, wait for five minutes or more.

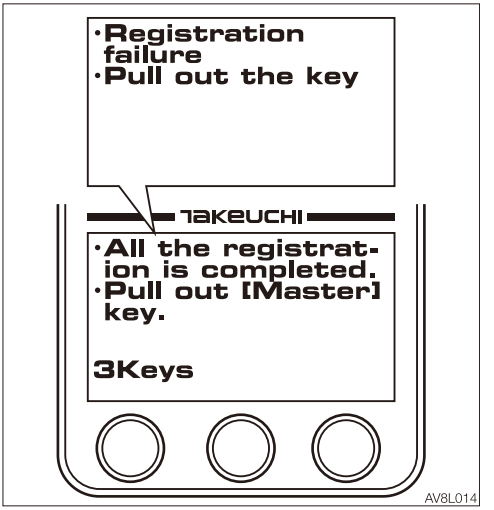

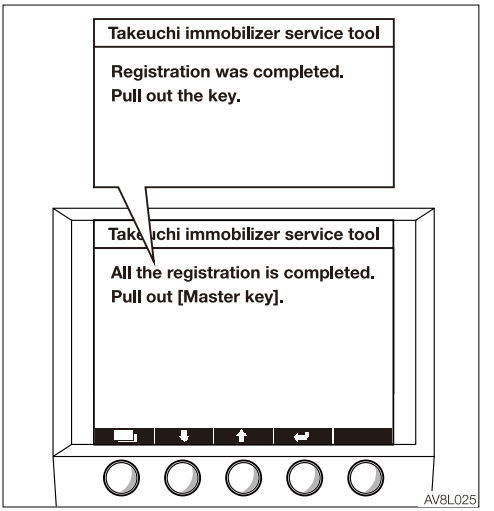

9. If any starter key has been registered, the message “All the registration is completed” appears. Turn the master key (1) from the ON (ACC) to the OFF position, and then remove it from the starter switch to complete the registration.
   If no starter key has been registered, the message “Registration failure” appears, and the registration information is returned to the initial state.

Deleting a registered starter key
The information of each registered starter key can be deleted to cancel its ability to start the engine.

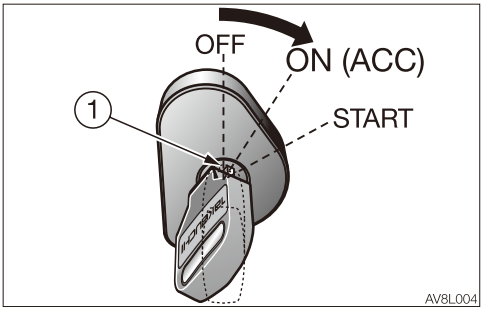

1. Insert the master key (1) into the starter switch and turn the key from the OFF to the ON (ACC) position.

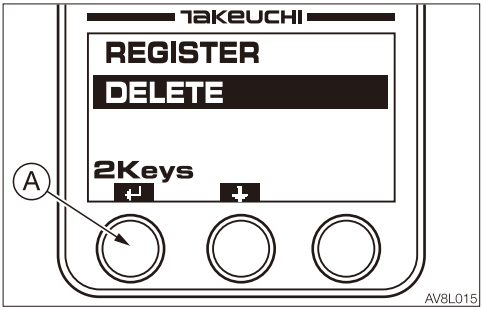

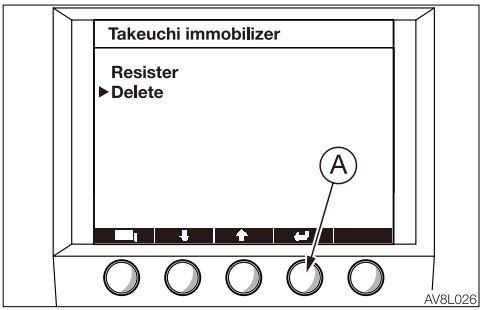

2. On the LCD, select “DELETE” and press (A).

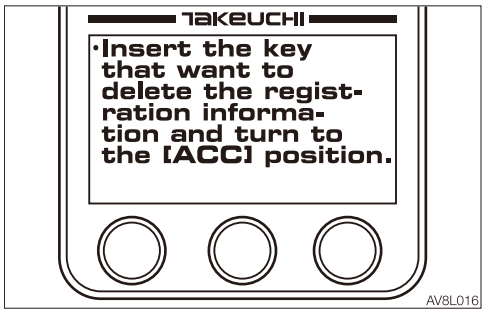

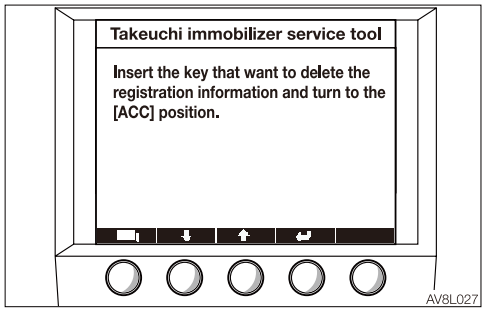

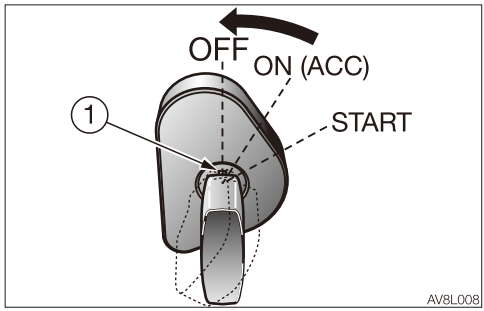

3. When the display shown as the illustration appears on the LCD, turn the master key (1) from the ON (ACC) to the OFF position, and then remove it from the starter switch.
Note: If the registered key is lost and you want to delete all registration information, please refer to STEP 3 (A) on page 8-21.

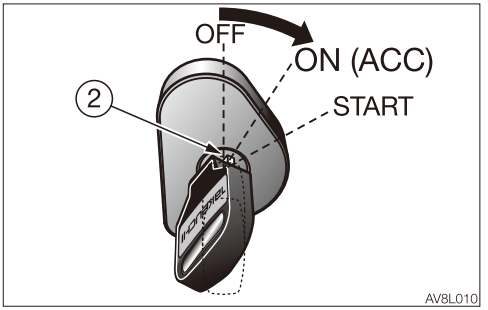

4. Insert the starter key (2) to be deleted into the starter switch and turn the key from the OFF to the ON (ACC) position.

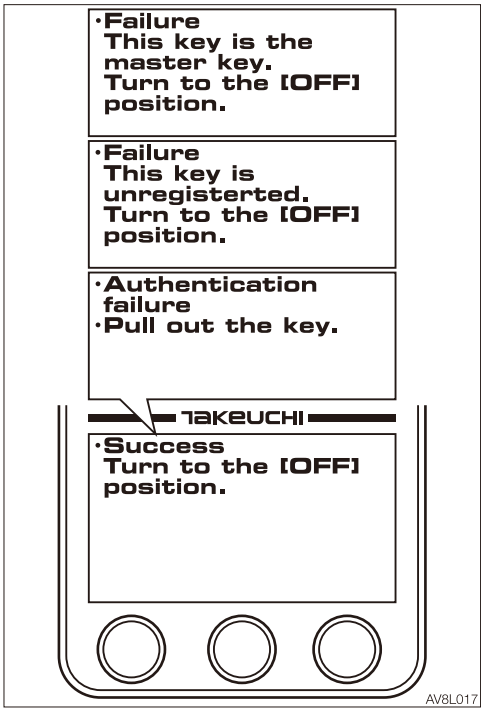

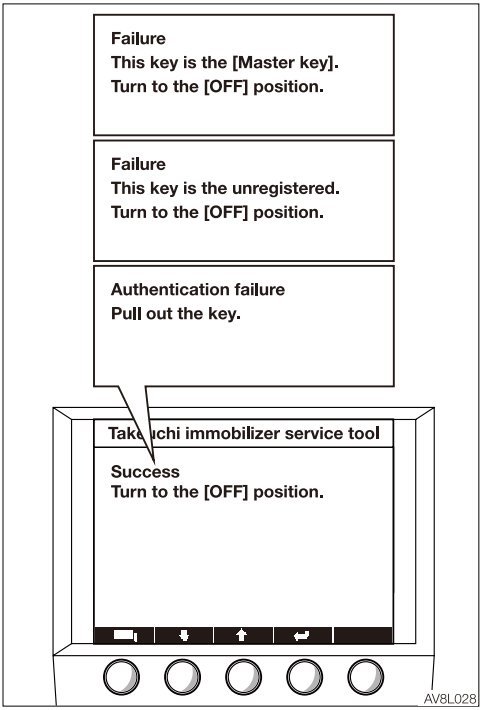

5. If the deletion is successful, the message “Success” appears. This means that the information registered for the starter key (2) currently inserted has been deleted. If the deletion fails, the message “Failure” or “Authentication failure” appears on the LCD. Remove the starter key, and then repeat the steps from Step 1 again.

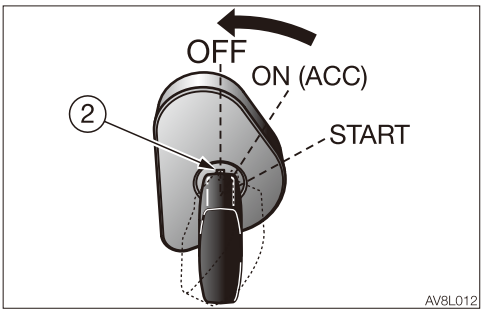

6. Turn the starter key (2) from the ON (ACC) to the OFF position, and then remove it from the starter switch.
   To continue deletion, repeat the steps from Step 1.

IF THE MASTER KEY IS LOST

If you lose your master key, contact your service or sales dealer for assistance.

COUNTRIES WHERE THE SYSTEM CAN BE USED

To use the Takeuchi Security System, “radio wave authentication” must be obtained in the country where the system is to be used. The system can be used in the countries listed below, as of January 2017. Do not use the system in other countries. For details on how to disable the system, please contact your service or sales dealer for assistance.

Countries where the system can be used:
Ireland, Italy, UK, Estonia, Austria, Holland, Cyprus, Greece, Croatia, Sweden, Spain, Slovakia, Slovenia, Czech, Denmark, Germany, Hungary, Finland, France, Bulgaria, Belgium, Poland, Portugal, Malta, Latvia, Lithuania, Rumania, Luxemburg, Iceland, Norway, Liechtenstein, Switzerland, Turkey

LED LIGHTS

The power consumption can be reduced by replacing the lights, such as the working light, with LED lights.
If the light fails to turn on after replacement, please contact your sales or service dealer for help.

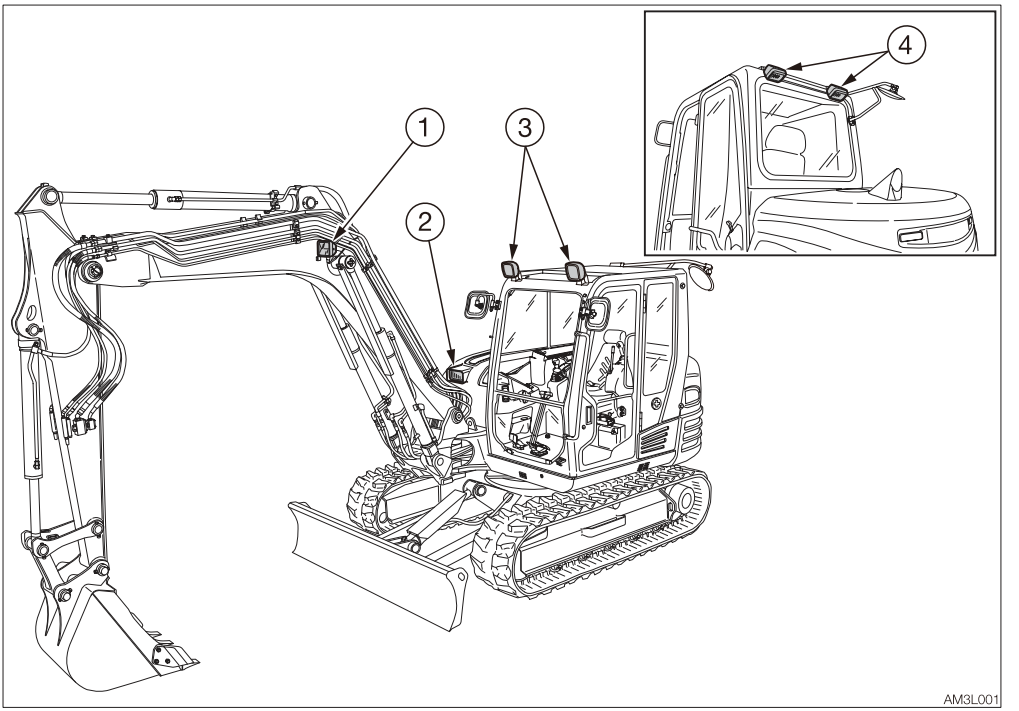

LED lights package 1
The LED lights are used for the boom light (1), working light (2) and front light (3).
Note: The rear light (4) is not included in the LED lights package 1.

LED lights package 2
The LED lights are used for the boom light (1), working light (2), front light (3) and rear light (4).
The light switch is also changed.

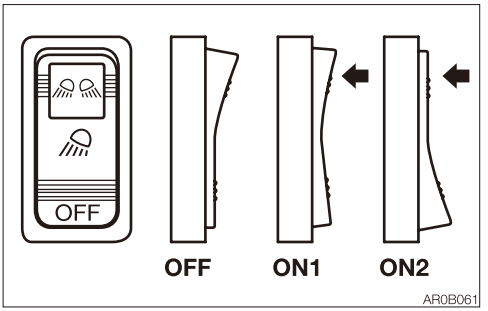

OFF ....Off
ON1 ...The boom light (1), working light (2), front light (3), side lights, tail lamps and the switch lamp are turned on.
ON2 ...The boom light (1), working light (2), front light (3), rear light (4), side lights, tail lamps and the switch lamp are turned on.

First Published March 2015
Twentieth Published April 2026

AG9EN019

OPERATOR'S MANUAL

TB240 Mini excavator

Edited and issued by TAKEUCHI MFG. CO., LTD.

Printed in Japan by STATION M Co., Ltd.

ZTR Control Systems, LLC

955 Green Valley Road
London, Ontario, N6N 1E4
Tel: 1-519-452-1233
FAX: 1-519-452-7764

www.ztr.com
info@ztr.com

February 1, 2018

RE: M8HZT / M8HZT-E / M8HBZ / M8HBZ-E Radio Equipment Directives (RED)

To whom it may concern,

This letter is to confirm that ZTR products **M8HZT / M8HZT-E / M8HBZ / M8HBZ-E** sufficiently demonstrate compliance to the Radio Equipment Directives (RED). The M8HZT-E is a superset of functionality of these other three devices and thereby is represented of compliant performance for the other three models.

The results of these tests can be found in **EMC Test Report (EMC_SL17052501-CAL-004-TTU4531HEW)**, issued on June 20, 2017. The tests were carried out by a notarized 3rd party certification lab **Siemic**.

This Declaration of Conformity is issued under the sole responsibility of ZTR Control Systems (or the manufacturer)

Please direct any test results questions or concern to ZTR's Engineering Group for clarification.

Regards,

Brent Horne
Director of Product Development
ZTR Control Systems

ASAHI DENSO
6-2-1 Somejidai, Hamakita-ku, Hamamatsu, Shizuoka 434-0046, Japan

EU DECLARATION of CONFORMITY (DoC)

This declaration of conformity is issued under the sole responsibility of the manufacturer:

Name:	ASAHI DENSO CO.,LTD
Address:	6-2-1 Somejidai, Hamakita-ku, Hamamatsu, Shizuoka, 434-0046 Japan

We declare that the DoC is issued under our sole responsibility and belongs to the following product.

Object of the declaration:

Product Name	Meter panel Immobilizer
Model Name	CZ131,CZ131A
Accessories	N/A

The object of the declaration described above is in conformity with the relevant Union harmonization legislation:

Radio Equipment (RE) Directive (2014/53/EU)

The following harmonized standards and technical specifications have been applied:

Health & Safety (Article 3.1(a)):	EN 60065: 2014
EMC (Article 3.1(b)):	EN 301 489-1 V2.1.1 EN 301 489-3 V2.1.1 (Final draft)
Radio Spectrum (Article 3.2):	EN 300 330 V2.1.1

Japan, Shizuoka	May 29, 2017	Tomohiro Yaguchi
Place of Issue:	Date of Issue:	Tomohiro Yaguchi Section chief Engineering Department

ASAHI DENSO

6-2-1 Somejidai, Hamakita-ku, Hamamatsu, Shizuoka 434-0046, Japan

EU DECLARATION of CONFORMITY (DoC)

This declaration of conformity is issued under the sole responsibility of the manufacturer:

Name:	ASAHI DENSO CO.,LTD
Address:	6-2-1 Somejidai, Hamakita-ku, Hamamatsu, Shizuoka, 434-0046 Japan

We declare that the DoC is issued under our sole responsibility and belongs to the following product.

Object of the declaration:

Product Name	Immobilizer
Model Name	CZ156
Accessories	N/A

The object of the declaration described above is in conformity with the relevant Union harmonization legislation:

Radio Equipment (RE) Directive (2014/53/EU)

The following harmonized standards and technical specifications have been applied:

Health & Safety (Article 3.1(a)):	EN 60065: 2014
EMC (Article 3.1(b)):	EN 301 489-1 V2.1.1 EN 301 489-3 V2.1.1 (Final draft)
Radio Spectrum (Article 3.2):	EN 300 330 V2.1.1

Japan, Shizuoka	May 29, 2017	Tomohiro Yaguchi
Place of Issue:	Date of Issue:	Tomohiro Yaguchi Section chief Engineering Department

Declaration of Conformity

We herewith declare that following named machine, based on its conception and design and in the form brought into service is in accordance with the relevant, basic safety and health requirements of the following EU directives. In case of any alteration of the machine not coordinated with us, this certificate loses its validity.

Designation of the machine	Compact Excavator
Manufacturer	TAKEUCHI MFG. CO., LTD 205 Uwadaira, Sakaki-machi, Hanishina-gun, Nagano 389-0605, Japan

Model	TB240
Engine type	3NNSAE (e13*97/68DA*2012/46KA/*0574*Δ)
Engine power	27.2 kW @ 2200 rpm

The machine is in accordance with the requirements of EU directives:

1) Machine directive 2006/42/EC and appendix
2) Electromagnetic compatibility-regulation 2014/30/EU and appendix
3) Noise directive 2000/14/EC (Evaluation procedure according to appendix VI), 2005/88/EC and appendices.
4) Regulations on engine emissions: 97/68/EC as last amended by Directive 2012/46/EU.

Harmonized norms: EN474-1:2006+A6:2019, EN474-5:2006+A3:2013.

Compiler of the technical files:
Daniel Bailli
Parc d'Activités des Béthunes
3, avenue de la Mare 95310 SAINT OUEN L'AUMONE
CS 29258 – SOA

Issued in Sakaki, Japan
Akio Takeuchi, Chairman

