REPLACING THE PILOT LINE FILTER

⚠ WARNING

- **Stop the engine and allow each part of the machine to cool down before performing maintenance.**
  - **The engine, the hydraulic system and many other parts of the machine are hot immediately after the engine is stopped. Touching these parts will cause burns.**
  - **The hydraulic oil is also hot and under high pressure immediately after the engine is stopped. Be careful not to touch the oil when loosening the cap or plug. Working on the machine under these conditions could result in burns or injuries due to the hot oil spurting out.**
- **Oil may spurt out if caps or filters are removed or pipes are disconnected before releasing the pressure in the hydraulic system.**
  - **Press the air breather button to relieve the internal pressure from the tank.**
  - **When removing plugs or screws, or when disconnecting hoses, stand to the side and loosen them slowly to gradually release the internal pressure before removing.**

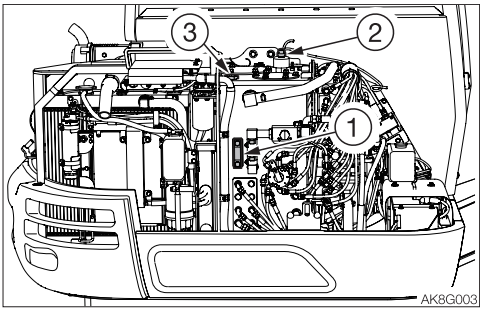

1. Open the right side cover.
2. Press the air breather button (2) to relieve the internal pressure from the tank.

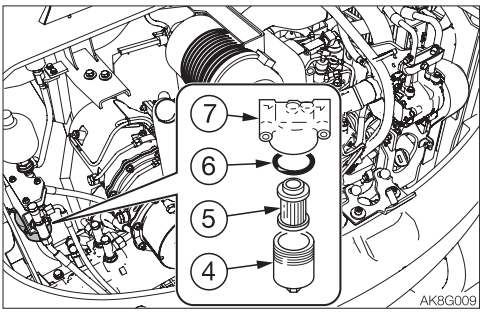

3. Open the engine hood.
4. Turn the case (4) counterclockwise and remove it.
5. Remove the element (5) and O-ring (6).
6. Clean the inside of the case (4).
7. Apply a thin layer of oil on the O-ring of the new filter.
8. Install the new element on the filter stand (7).
9. Apply a thin layer of oil on the new O-ring (6).
10. Install the new O-ring (6) and the case (4) on the filter stand (7).
    - Case (4) tightening torque: 25 to 35 N·m (18.4 to 25.8 ft-lb)
11. Inspect the level with the sight gauge (1) and replenish if the level is too low. Refer to “Inspecting the hydraulic oil tank level and replenishing” on page 5-23.

REPLACING THE TRAVEL MOTOR GEAR OIL

⚠ WARNING

- **Stop the engine and allow the machine to cool down before performing maintenance.**
  - **The travel motor is hot immediately after the engine is stopped. Touching it will cause burns.**
  - **The gear oil is also hot and under high pressure immediately after the engine is stopped. Be careful when loosening the plugs. Working on the machine under these conditions could result in burns or injuries.**
- **The pressure in the reduction gear case of travel motor may cause oil or the plug to fly out. Loosen the plug slowly to release the pressure.**

IMPORTANT: If the percentage of the traveling time within the total operating time is high, replace the gear oil earlier than the specified time.

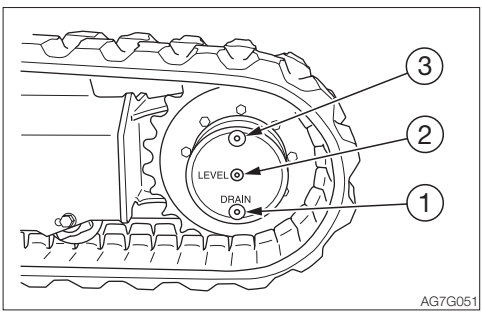

1. Set the travel motor so that plug (1) is at the very bottom.
2. Place a pan under the plug (1).
3. Remove the plugs (1), (2) and (3) and drain the oil.
4. Rewrap the plugs with new sealing tape.
5. Tighten the plug (1).
   - Plug (1) tightening torque: 46 to 51 N·m (34 to 37.6 ft-lb)
6. Add oil through the hole of the plug (3) until oil flows out of the hole of the plug (2).
7. Tighten the plugs (2) and (3).
   - Plug (2) tightening torque: 12 to 18 N·m (8.8 to 13.3 ft-lb)
   - Plug (3) tightening torque: 46 to 51 N·m (34 to 37.6 ft-lb)

EVERY 250 HOURS

INSPECTING AND ADJUSTING THE FAN BELT

Refer to “Inspecting and adjusting the fan belt” on page 5-25.

INSPECTING AND ADJUSTING THE COMPRESSOR BELT (AC)

Refer to “Inspecting and adjusting the compressor belt (AC)” on page 5-26.

CLEANING THE AIR CLEANER

⚠ WARNING

- **Stop the engine and allow the machine to cool down before performing maintenance.**
  - **The engine, muffler, radiator and many other parts of the machine are hot immediately after the engine is stopped. Touching it will cause burns.**
- **Wear required appropriate equipment such as protective goggle and filter mask when using compressed air, as metal fragments or other objects can fly and cause serious injury.**

IMPORTANT: Be careful not to scratch the element. Do not use an element if it is damaged.
IMPORTANT: When operating the machine in very dusty places, perform inspection and maintenance operations every day.
IMPORTANT: Be sure to install the element and dust cap securely. If not, dust could be drawn into the cylinder, damaging the engine.

1. Open the engine hood.

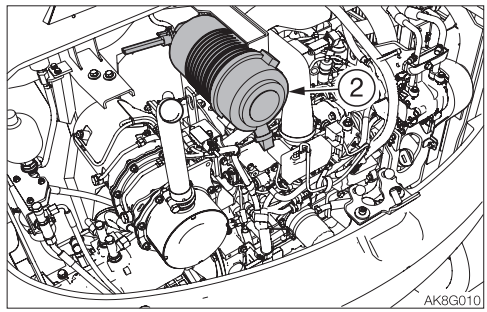

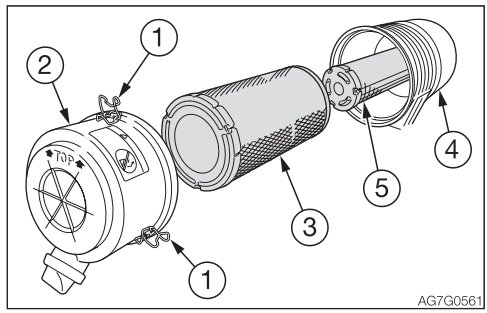

2. Loosen the clamps (1) and remove the dust cup (2).
3. Clean the inside of the dust cup (2).
4. Remove the primary element (3).
5. Cover the intake hole at the back of the body (4) with cloth or tape to prevent dirt from getting in.
   <If equipped with the secondary element>
   To prevent dirt from getting inside the engine, do not remove the secondary element (5).
6. Clean the inside of the body (4).

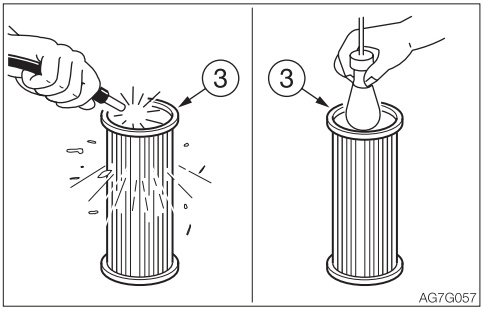

7. Clean the primary element (3) with dried compressed air (294 to 490 kPa or 43 to 71 psi).
   First blow the air from the inside of the element along the pleats. Then blow the air from the outside and finally from the inside again.
8. Light up the inside of the primary element (3) with a light bulb, inspect it, and replace it if there are small holes or thin spots.
9. Remove the cloth or tape applied in step 5.
10. Install the primary element (3).
11. Install the dust cup (2) with its "⬆ TOP ⬆" mark facing, and then fasten it with the clamps (1).

CLEANING THE RADIATOR FINS AND THE OIL COOLER FINS

⚠ WARNING

Wear required appropriate equipment such as protective goggle and filter mask when using compressed air, as metal fragments or other objects can fly and cause serious injury.

IMPORTANT: Be careful not to damage the fins when cleaning.

- **When using compressed air or pressurized water, make sure the pressure is no higher than 200 kPa (28 psi) and hold the nozzle sufficiently away from the fins.**

IMPORTANT: When using water, cover the electrical system to prevent water from getting in.

IMPORTANT: When operating the machine in very dusty places, perform inspection and maintenance operations every day.

1. Open the engine hood and right side cover.

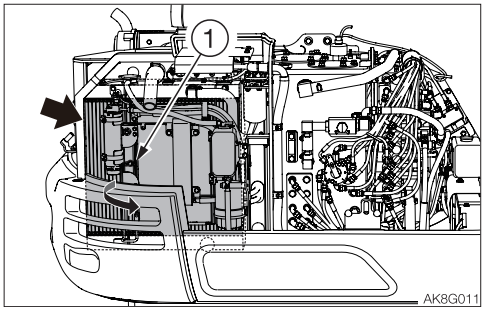

2. Remove the screws (1) and open the condenser.
3. Blow compressed air on the fins to remove mud and dirt stuck on them.

CLEANING THE AIR FILTER (AC)

⚠ WARNING

Wear required appropriate equipment such as protective goggle and filter mask when using compressed air, as metal fragments or other objects can fly and cause serious injury.

Clean the filter immediately after operating in dusty places.
If the filter is clogged, the air flow is reduced and a booming sound is heard from the air conditioner unit.

Removing the filter

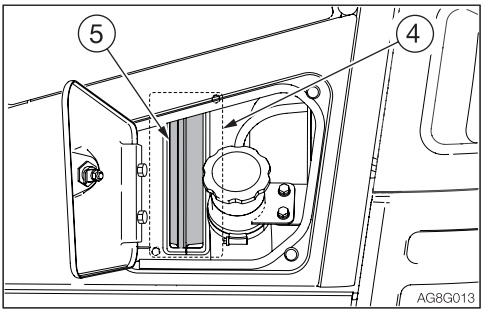

1. Open the fuel lid.
2. Loosen the screw and remove the cover (4).
3. Remove the filter (5).
4. Use compressed air or water to clean the filter, depending on how dirty it is.
   Filter (5) Part No. 19115-13680

Cleaning

1. Blow dry, compressed air (138 kPa or 20 psi or less) directly on the filter from the inside, moving up and down along the pleats.
   Be sure to keep the nozzle at an adequate distance from the filter.
2. Wash the filter with neutral detergent if it is very dirty. Dry the filter completely after washing it.

Replacing

Replace the filter with a new one once a year or if it is still clogged after blow-drying with compressed air and washing.

CLEANING THE CONDENSER (AC)

⚠ WARNING

Wear required appropriate equipment such as protective goggle and filter mask when using compressed air, as metal fragments or other objects can fly and cause serious injury.

IMPORTANT: Be careful not to damage the fins when cleaning.

- **When using compressed air or pressurized water, make sure the pressure is no higher than 200kPa (28 psi) and hold the nozzle sufficiently away from the fins.**

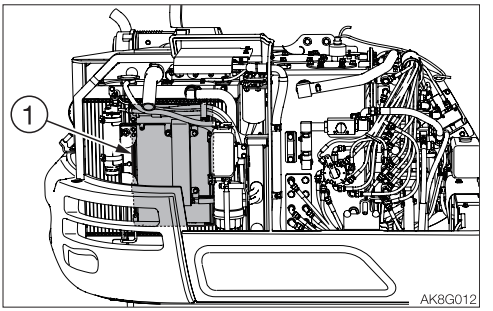

1. Open the engine hood and right side cover.
2. Clean the condenser (1).

REPLACING THE FUEL FILTER AND WATER SEPARATOR FILTER

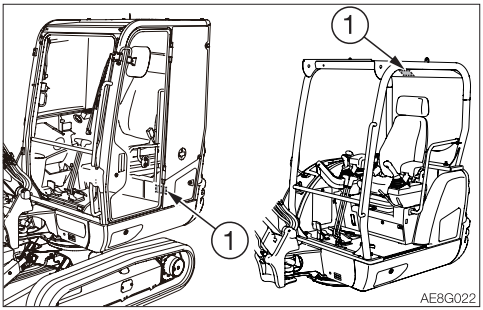

When the inspection/maintenance decal (1) states to replace every 250 hours, perform the replacement.

⚠ WARNING

- **Do not smoke or permit open flames while handling fuel or working on the fuel system.**
- **Stop the engine in a well-ventilated place and allow it to cool down before performing maintenance.**
- **Clean up spilled fuel immediately.**

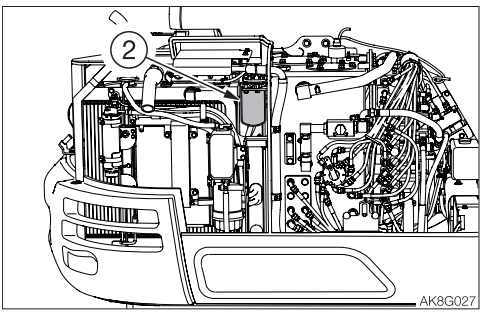

1. Open the engine hood.
2. Turn the filter (2) counterclockwise with the filter wrench and remove it.
3. Clean the surface of installation of the filter stand.
4. Apply a thin layer of oil on the packing of the new filter.
5. Install the new filter by hand.
6. Tighten one more turn after the filter packing comes in contact with the surface of installation. (Torque when tightening with filter wrench: 20 to 24 N·m or 15 to 18 ft-lb.)
7. Bleed the air.
   Refer to “Bleeding air from the fuel system” on page 6-12.
8. Replace the water separator filter.
   For replacement instructions, refer to “Replacing the water separator filter” on page 5-46.

INSPECTING THE REFRIGERANT (GAS) LEVEL (AC)

⚠ WARNING

- **Exposure of the eyes or hands to the cooler's refrigerant could result in blindness or frostbite. Never touch the refrigerant or loosen the parts of the cooling circuit.**
- **Keep flames away if the refrigerant gas is leaking.**
- **The high-pressure pipes of the air conditioner can be very hot (80 to 120°C or 176 to 248°F). Be careful not to burn yourself.**

The cooling capacity decreases if the amount of refrigerant is insufficient. Inspect the refrigerant level using the sight glass (2) on the top of the receiver dryer (1).

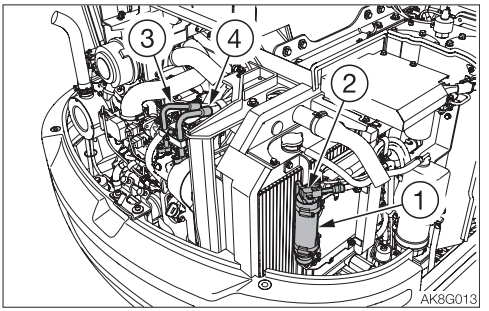

1. Open the engine hood.
2. Inspect the places for the conditions below.

Places for inspection	Conditions
Cab door	Fully open
Temperature control dial	Set fully to the COOL side
Fan speed	High
Ventilation/ Circulation select lever	Circulation
Engine speed	Maximum speed
Air conditioner switch	ON

3. Inspect the refrigerant by watching the flow of air bubbles through the sight glass (2).
   Refer to "Check list for refrigerant volume" on page 5-43.
4. Check the temperature of the compressor's high pressure pipe (3) and low pressure pipe (4).
   Refer to "Check list for refrigerant volume" on page 5-43.

Check list for refrigerant volume

Air conditioner	Normal	Abnormal		
High/low pressure pipe temperature	High pressure pipe is hot (80 to 120°C or 176 to 248°F), low pressure pipe is cold (8 to 15°C or 46 to 59°F). Clear difference in temperature between the pipes.	High pressure pipe is warm, low pressure pipe is slightly cool. No significant difference in temperature between the pipes.	Little difference in temperature between the high-pressure pipe and the low-pressure pipe.	High pressure pipe is hot, low pressure pipe is slightly cool. A significant difference in temperature between the pipes.
Pipe connection	Normal	Some places are dirty with oil.	Some places are extremely dirty with oil.	Normal
Sight glass	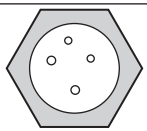 AG7G064 Almost transparent with some bubbles. Fully transparent when the engine speed is increased or decreased.	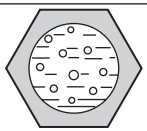 AG7G065 Flow of bubbles can be seen constantly. Sometimes transparent or white with bubbles.	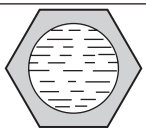 AG7G066 Mist-like flow is faintly visible.	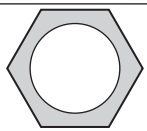 AG7G067 No bubbles is visible, even when the fan is set to High and the engine is idling.
Refrigerant level	Proper level	Refrigerant may be leaking.	Refrigerant has leaked; little is left.	Refrigerant level too high

If the air conditioner is not working
If the air conditioner does not work well, set the fan switch to OFF and contact your sales or service dealer for inspection and/or repairs.

IMPORTANT: Continued use of the air conditioner when it is not working properly will damage its various parts.
IMPORTANT: Using the air conditioner when there is no refrigerant will damage the compressor.
IMPORTANT: Always consult your sales or service dealer for replacing the refrigerant. Be sure to use R134a refrigerant (630 to 710 g or 1.39 to 1.56 lb.).

EVERY 500 HOURS

REPLACING THE ENGINE OIL AND THE OIL FILTER

⚠ WARNING

Stop the engine and allow the machine to cool down before performing maintenance.

- **The engine, muffler, radiator, hydraulic lines, sliding parts and many other parts of the machine are hot immediately after the engine is stopped. Touching these parts will cause burns.**
- **The engine oil is also hot. Be careful not to touch the hydraulic oil when loosening the cap or plug. Working on the machine under these conditions could result in burns or injuries.**

Engine oil

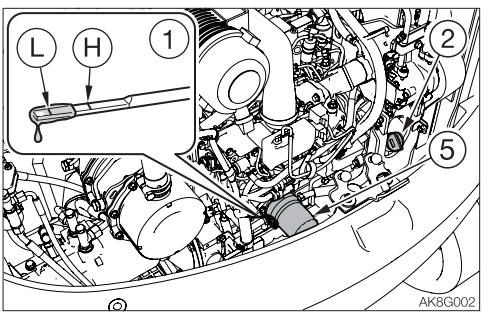

1. Open the engine hood and remove the oil filler cap (2).

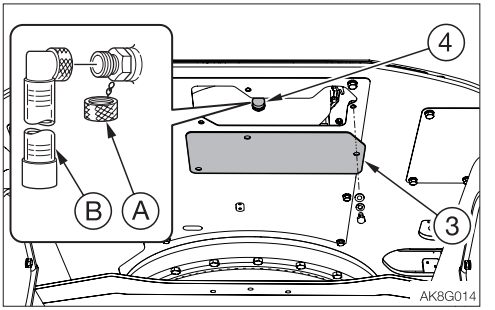

2. Loosen the bolts and remove the under cover (3).
3. Place a pan for catching the waste oil under the drain plug (4).
4. Remove the cap (A), install connector (B) and drain the oil. (The oil comes out when the screw is tightened.)
5. Remove the connector (B) and install the cap (A).
6. Install the under cover (3).

IMPORTANT: Check the waste oil for metal powder. If it contains large amounts of metal powder, consult your sales or service dealer.

Engine oil filter

7. Turn the filter (5) counterclockwise with the filter wrench and remove it.
8. Clean the surface of installation of the filter stand.
9. Apply a thin layer of oil on the packing of the new filter.
10. Install the new filter by hand.
11. Tighten one more turn (with the filter wrench) after the filter packing comes in contact with the surface of installation. (Torque when tightening with filter wrench: 19.6 to 23.5 N·m or14 to 17 ft-lb.)
12. Add oil up to between the upper limit (H) and the lower limit (L) of the dipstick (1). Problems could arise if the oil level is either too low or too high. It takes around 10 to 20 minutes for all of the added oil to go down to the oil pan.
13. Tighten the oil filler cap (2).
14. Start the engine, run it at low idle for about 5 minutes, then stop it.
15. After about 10 minutes, inspect the oil level.

Note: Change the engine oil and oil filter even if the running time is less than 500 hours after a year's time of operation. Or, change the engine oil and oil filter if the running time reaches 500 hours within a year's time of operation.

REPLACING THE FUEL FILTER

⚠ WARNING

- **Do not smoke or permit open flames while handling fuel or working on the fuel system.**
- **Stop the engine in a well-ventilated place and allow it to cool down before performing maintenance.**
- **Clean up spilled fuel immediately.**

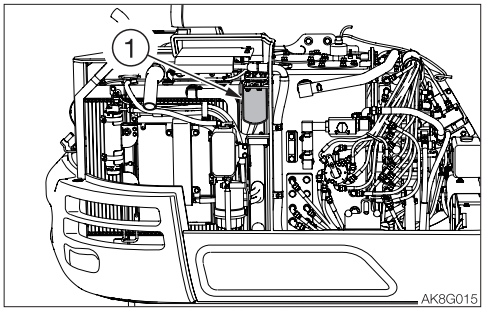

1. Open the engine hood.
2. Turn the filter (1) counterclockwise with the filter wrench and remove it.
3. Clean the surface of installation of the filter stand.
4. Apply a thin layer of oil on the packing of the new filter.
5. Install the new filter by hand.
6. Tighten one more turn after the filter packing comes in contact with the surface of installation. (Torque when tightening with filter wrench: 19.6 to 23.5 N·m or 14 to 17ft-lb.)
7. Bleed the air.
   Refer to "Bleeding air from the fuel system" on page 6-12.

REPLACING THE WATER SEPARATOR FILTER

⚠ WARNING

- **Do not smoke or permit open flames while handling fuel or working on the fuel system.**
- **Stop the engine in a well-ventilated place and allow it to cool down before performing maintenance.**
- **Clean up spilled fuel immediately.**

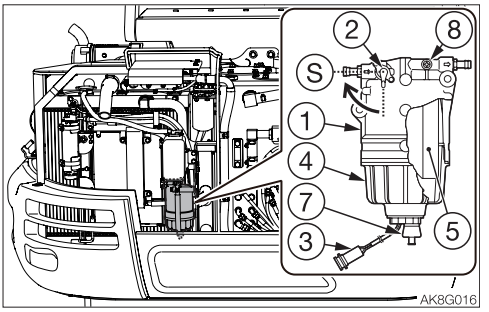

(S): Close

1. Open the engine hood.
2. Close the valve (2) of the water separator (1).
3. Place a pan for catching fuel under the drain hose.
4. Loose the air-bleeding plug (8) and the drain plug (7) to discharge fuel from inside.
5. Remove the sensor wiring coupler (3).
6. Remove the case (4) with the filter wrench.
7. Remove the element (5), and then clean the case. When doing the above, be careful not to damage the sensor.
8. Replace the packing with a new one and lubricate it with diesel fuel.
9. Install the new element (5) on the filter stand.
10. Tighten the case (4) by hand. Be sure to do it by hand.
    Tightening torque: 27 to 33 N·m (20 to 24.6 ft-lb)
11. Install the sensor wiring coupler (3).
12. Tighten the drain plug (7).
13. Bleed air.
    Refer to “Bleeding air from the fuel system” on page 6-12.

INSPECTING THE SLEW PINION GEAR

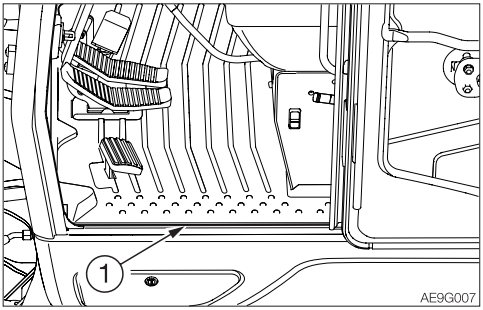

1. Remove the floor mat (1).

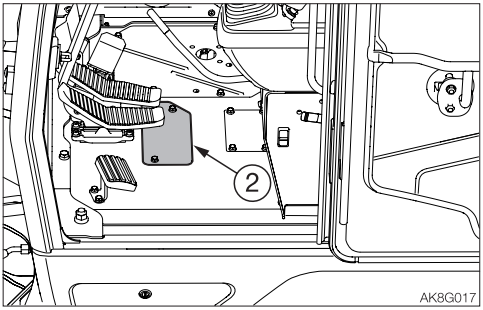

2. Remove the cover (2).

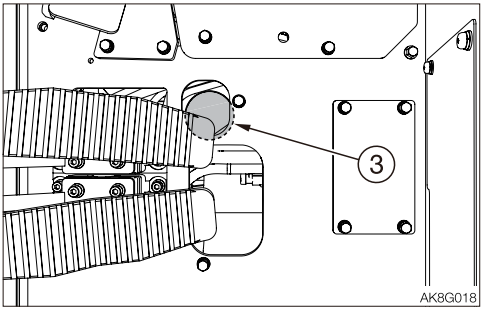

3. Remove the cap (3).
4. Make sure that the gear tooth surface of the slew bearing is well greased.
   If the surface is not adequately greased, add grease.
   If the grease has turned white due to water or mud entered it, replace the whole grease. Consult your sales or service dealer for help.
   Grease full capacity: 10 L (2.6 US gal) or 9 kg (20 lbs.)
5. Install the cap (3).
6. Install the cover (2).
7. Install the floor mat (1).

EVERY 1000 HOURS

REPLACING THE HYDRAULIC OIL RETURN FILTER

Refer to “Replacing the hydraulic oil return filter” on page 5-33.

REPLACING THE PILOT LINE FILTER

Refer to “Replacing the pilot line filter” on page 5-34.

REPLACING THE TRAVEL MOTOR GEAR OIL

Refer to “Replacing the travel motor gear oil” on page 5-35.

REPLACING THE AIR CLEANER ELEMENT

⚠ WARNING

Stop the engine and allow the machine to cool down before performing maintenance.

- **The engine, muffler, radiator and many other parts of the machine are hot immediately after the engine is stopped. Touching these parts will cause burns.**

IMPORTANT: Do not use an element if its pleats, gaskets or seals are damaged.
IMPORTANT: Be sure to install the element and dust cap securely. If not, dust could be drain into the cylinder, damaging the engine.

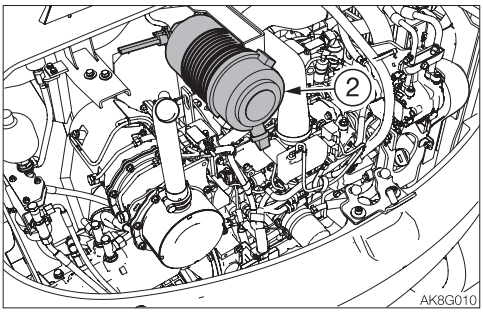

1. Open the engine hood.

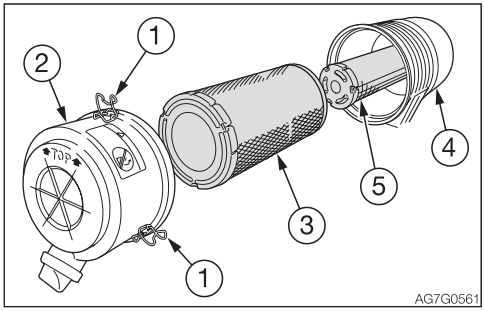

2. Loosen the clamps (1) and remove the dust cup (2).
3. Clean the inside of the dust cup (2).
4. Remove the primary element (3).
5. Cover the intake hole at the back of the body (4) with cloth or tape to prevent dirt from getting in.
   <If equipped with the secondary element>
   Do not yet remove the secondary element (5).
6. Clean the inside of the body (4).
7. Remove the cloth or tape applied in step 5.
   <If equipped with the secondary element>
   Remove the secondary element (5).
8. Install the new elements.
9. Install the dust cup (2) with its "⬆ TOP ⬆" mark facing up, and then fasten it with the clamps (1).

REPLACING THE AIR BREATHER FILTER

⚠ WARNING

Oil may spurt out if caps or filters are removed or pipes are disconnected before releasing the pressure in the hydraulic system.

- **Press the air breather button to relieve the tank pressure.**

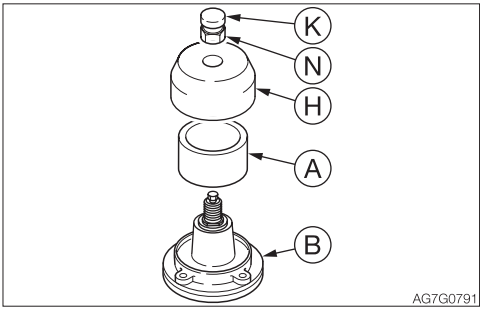

1. Open the right side cover.
2. Press the button (K) to relieve the internal pressure from the tank.
3. Remove the nut (N) on the air breather.
4. Remove the cover (H).
5. Replace the filter (A).
6. Install the cover (H) on the body (B).
7. Install the nut (N).

INSPECTING AND ADJUSTING THE ENGINE VALVE CLEARANCE

This operation requires experience. Ask your sales or service dealer for it.

EVERY 1500 HOURS

INSPECTING THE CRANKCASE BREATHER SYSTEM

This operation requires experience. Ask your sales or service dealer for it.

EVERY 2000 HOURS

CLEANING THE ENGINE COOLING SYSTEM

Replace the coolant after the two-year operation even if the running time is less than 2000 hours.

⚠ WARNING

- **Stop the engine and allow the machine to cool down before performing maintenance.**
  - **The engine, muffler, radiator and many other parts of the machine are hot immediately after the engine is stopped. Touching these parts will cause burns.**
  - **The engine coolant is also hot and under high pressure immediately after the engine is stopped. Be careful when loosening the caps or plugs. Working on the machine under these conditions could result in burns or injuries due to the hot coolant spurting out.**
- **If maintenance must be performed with the engine running, always work as a two person team communicating each other.**
  - **One person must sit in the operator's seat so that he/she can immediately stop the engine when necessary. He/she must take care not to touch the lever or pedal unless necessary.**
  - **The one who performs maintenance must make sure to keep his/her body or clothing away from the moving part of the machine.**
- **Standing at the back of the machine while the engine is running is extremely dangerous, as the machine could move suddenly. Never stand at the back of the machine while the engine is running.**
- **Do not remove the radiator cap or the drain plug when the cooling water is hot. Stop the engine and wait until the engine and the cooling water cool. Then, slowly loosen the radiator cap and the drain plug to remove them.**

When cleaning, if the temperature of the coolant is low, the thermostat will be closed and the coolant will not circulate in the radiator. Heat the coolant water to at least 90°C (194°F) before cleaning.

1. Open the engine hood and the side cover.

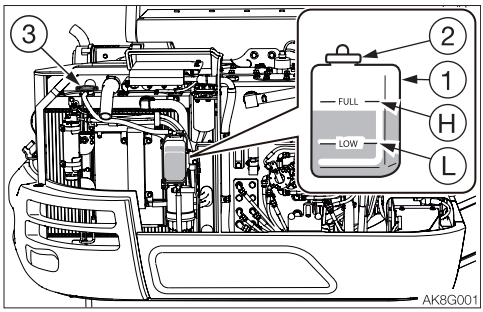

2. Gradually loosen the radiator cap (3) to release the internal pressure, and then remove the cap.

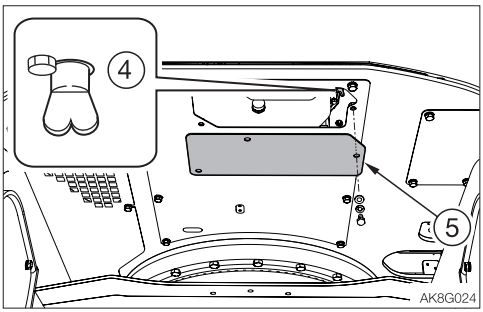

3. Loosen the bolts and open the cover (5).
4. Place a pan for catching the waste coolant under the drain plug (4), and then loosen the drain plug (4) to drain the coolant.
5. Tighten the drain plug (4).
6. Add tap water to the radiator through the coolant fill port up to the top of the port. Take time and slowly add water, so that no air enters the radiator.
7. Close the radiator cap (3).
8. Start the engine and run it at a speed slightly above low idling. Raise the water temperature to at least 90°C (194°F), and then run the engine for about 10 minutes with the thermostat open.

9. Stop the engine, wait until the cooling water temperature becomes lower, and then remove the drain plug (4) to drain the water.
10. After draining, clean the cooling system using a cleaning agent. When using the cleaning agent, follow the instructions included with the agent.
11. Repeat the steps 4 to 8 to rinse the cooling system.
12. Tighten the drain plug (4).
13. Take time and slowly add the new coolant (mixture of antifreeze and tap water) to the radiator through the fill port until it is full.
14. Close the radiator cap (3).
15. Warm up the engine. Use the meters to check that there are no irregularities in the cooling system at this time.
16. Increase the water temperature to at least 90°C (194°F). Then, run the engine for about 10 minutes with the thermostat kept open.
17. Stop the engine, wait until the cooling water temperature becomes lower, and then check the level of coolant in the radiator.
    If necessary, add cooling water until the radiator is full.
18. Close the radiator cap (3).
19. Clean the interior of the reserve tank (1), and then add coolant to the upper limit (H).
20. When the coolant has been replaced, inspect the coolant level once again after operating the machine.
    When the machine is operated, the coolant is distributed throughout the entire system, resulting in the lower coolant level.
    Add coolant up to the full level.

INSPECTING THE ACCUMULATOR (IF EQUIPPED)

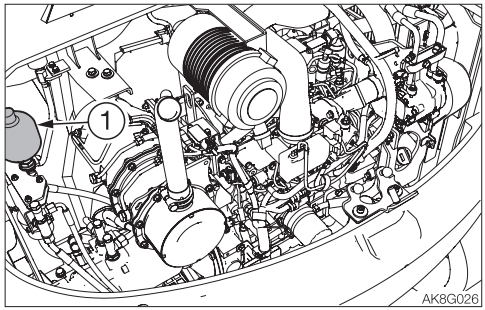

⚠ WARNING

- **High-pressure nitrogen gas is enclosed in the accumulator (1). If handled incorrectly, it could explode and cause serious injury. Strictly observe the following precautions:**
  - **Do not disassemble.**
  - **Do not allow flame nearby or throw it into a fire.**
  - **Do not drill, weld or fuse.**
  - **Do not subject it to physical shock such as hitting, rolling or dropping.**
  - **Before disposing of the unit, the sealed gas must be drained. Contact a Takeuchi sales or service dealer for help.**
- **Clear all personnel from the work area.**
- **Sound the horn to warn people around the machine.**

IMPORTANT: If the accumulator (1) fails, the boom cannot be lowered or the residual pressure in the hydraulic circuit cannot be released while the engine is stopped.

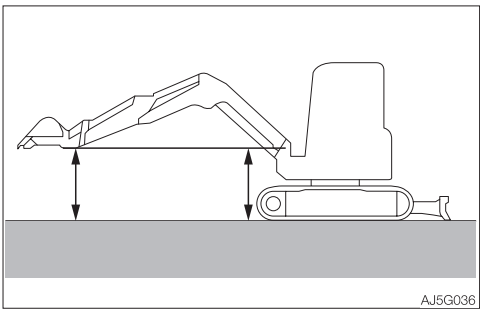

1. Start the engine, then fully retract the arm and bucket cylinders.
2. Operate the boom so that the tip of the arm is positioned at the bottom of the boom.

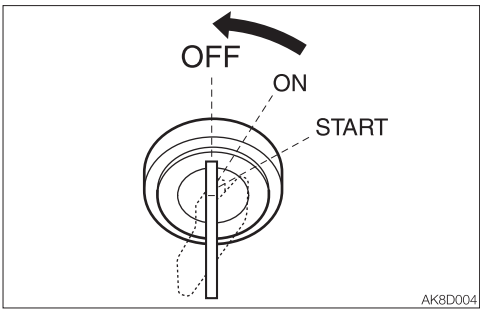

3. Turn the starter key to the OFF position to stop the engine.

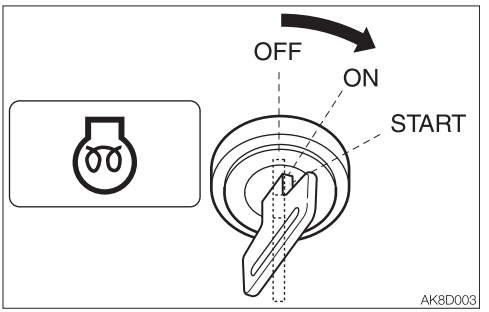

4. Turn the key to the ON position. (Do not start the engine.)

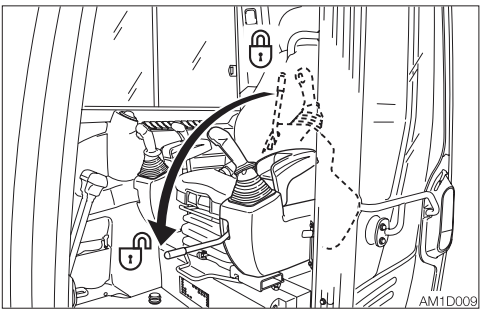

5. Fully lower the safety lock lever to disengage the lock.

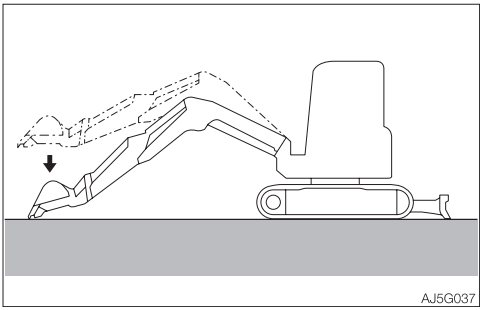

6. Lower the boom until the bucket contacts the ground.
   The machine is normal if the bucket is lowered to the ground. The accumulator (1) is probably faulty if the boom cannot be lowered or stops halfway. Consult a Takeuchi sales or service dealer for help.

Note: When the boom is lowered to lower the bucket to the ground, do it within 10 minutes of stopping the engine.

EVERY 3000 HOURS

INSPECTING THE TURBOCHARGER (BLOW WASH AS NECESSARY)

This operation requires experience. Ask your sales or service dealer for it.

INSPECTING, CLEANING AND CHECKING OPERATION OF THE EGR VALVE

This operation requires experience. Ask your sales or service dealer for it.

CLEANING THE EGR LEAD VALVE

This operation requires experience. Ask your sales or service dealer for it.

CLEANING THE EGR COOLER (CLEANING THE WATER SIDE AND EXHAUST AIR PASSAGE BLOWER)

This operation requires experience. Ask your sales or service dealer for it.

INSPECTING THE OPERATION OF THE AIR INTAKE THROTTLE VALVE

This operation requires experience. Ask your sales or service dealer for it.

INSPECTING AND CLEANING THE FUEL INJECTOR

This operation requires experience. Ask your sales or service dealer for it.

EVERY 4000 HOURS

REPLACING THE HYDRAULIC OIL AND CLEANING THE SUCTION STRAINER

⚠ WARNING

- Stop the engine and allow each part of the machine to cool down before performing maintenance.
  - The engine, the hydraulic system and many other parts of the machine are hot immediately after the engine is stopped. Touching these parts will cause burns.
  - The hydraulic oil is also hot and under high pressure immediately after the engine is stopped.
    Be careful not to touch the oil when loosening the cap or plug. Working on the machine under these conditions could result in burns or injuries due to the hot oil spurting out.
- Oil may spurt out if caps or filters are removed or pipes are disconnected before releasing the pressure in the hydraulic system.
  - Press the air breather button to relieve the internal pressure from the tank.
  - When removing plugs or screws, or when disconnecting hoses, stand to the side and loosen them slowly to gradually release the internal pressure before removing.

1. Slew 60° clockwise and set the machine to the hydraulic oil level inspection posture.
   Refer to “Inspecting the hydraulic oil tank level and replenishing” on page 5-23.
2. Open the right side cover.

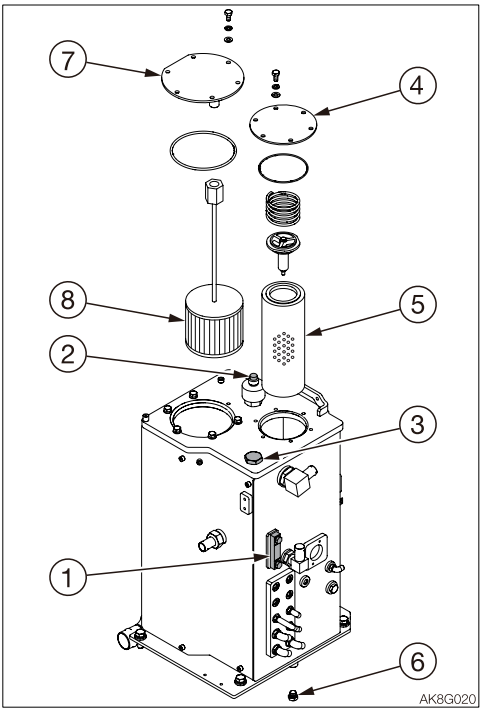

3. Press the button (2) to relieve the internal pressure from the tank.
4. Replace the air breather filter (A).
   Refer to “Replacing the air breather filter” on page 5-50.
5. Remove the plug (3).
6. Place a pan under the plug (6) to catch the waste oil.
7. Remove the drain plug (6), and then drain the hydraulic oil.
8. Loosen the bolts and remove the flange (4).
9. Remove the return filter (5).
10. Loosen the bolts and remove the flange (7).
11. Remove the suction strainer (8) and clean it.

12. Clean the inside of the hydraulic oil tank.
13. Tighten the drain plug (6).
14. Install the suction strainer (8) on the tank and then install the flange (7).
15. Install the new return filter (5) and the flange (4) on the tank.
16. Add hydraulic oil from the hole of plug (3) up to the level between the upper limit (H) and the lower limit (L) in the sight gauge (1).
17. Tighten the plug (3).
18. Bleed air from the hydraulic oil circuit following “Bleeding air” below.
19. Set the machine to the hydraulic oil level inspection posture and inspect the oil level after the oil cools.
    Refer to “Inspecting the hydraulic oil tank level and replenishing” on page 5-23.

Bleeding air

IMPORTANT: After replacing the hydraulic oil or hydraulic devices, or after performing maintenance of the hydraulic devices, bleed air from the hydraulic circuits and hydraulic devices. Failure to do so may damage the hydraulic devices.

• Hydraulic pump

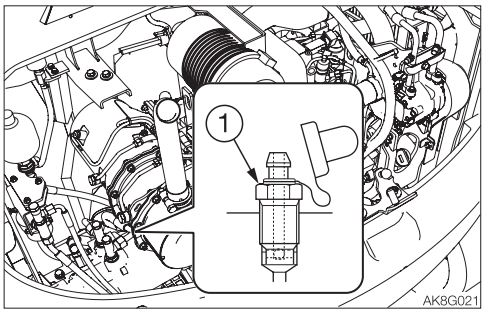

1. Open the engine hood.
2. Loosen the vent plug (1) on the hydraulic pump.
3. Once hydraulic oil overflows from the vent plug hole (1), tighten the vent plug (1).

• Cylinders

1. Start the engine, let it run at a low-idling speed for 10 minutes.
2. Maintain the engine at low idle, and then slowly extend and retract each cylinder 4 or 5 times, without letting them reach the stroke end.
3. While running the engine at high speed, slowly extend and retract each cylinder 4 or 5 times, without letting them reach the stroke end.
4. Return the engine speed to low idle, and then slowly extend and retract each cylinder 4 or 5 times to the stroke end.

- **Emergency shut-off valve (If equipped)**
  This operation is dangerous and requires experience. Ask your sales or service dealer for help.
  If air is not released, the working equipment could become slow in reacting to the operation of the operator and show unexpected behavior.

⚠ WARNING

When removing plugs or screws, or when disconnecting hoses, stand to the side and loosen them slowly to gradually release the internal pressure before removing.

1. Place a pan under the hose (A) or (B) to catch the waste oil.
2. Start the engine and run it at low idle.
3. Fully lower the safety lock lever to the unlock position.

Boom

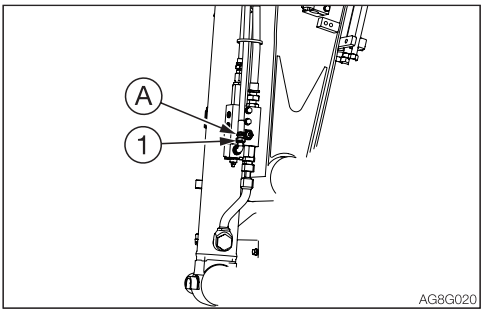

4. Hold the hose fitting (A) in place with a wrench and slowly loosen the hose nut (1).
5. Slowly move the boom in the “Boom lower” direction a little until there are no more air bubbles coming from the hose nut (1) joint.
6. Hold the hose fitting (A) in place with a wrench and tighten the hose nut (1).

Arm

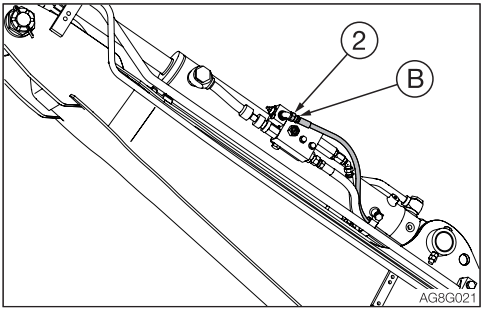

4. Hold the hose fitting (B) in place with a wrench and slowly loosen the hose nut (2).
5. Slowly move the arm in the “Arm lower” direction a little until there are no more air bubbles coming from the hose nut (2) joint.
6. Hold the hose fitting (B) in place with a wrench and tighten the hose nut (2).

WHEN REQUIRED

REPLACING THE BUCKET TEETH AND THE SIDE CUTTERS

Replace the bucket teeth and the side cutters when the tooth points or the side cutters are worn. Do not wait until the adapter or bucket is damaged.

⚠ WARNING

- **Before performing maintenance or repairs under the machine, lower all moveable working equipment to the ground or in the lowermost position.**
- **To prevent unexpected movement, firmly secure the working equipment when repairing or replacing the bucket teeth or side cutter.**
- **When using a hammer, pins may fly out or metal particles may be scattered. This may lead to serious injury.**
  - **If hard metal parts such as pins, bucket teeth, side cutter or bearings are hit with a hammer, wear protective gear such as safety goggles and gloves.**
  - **When hitting pins or bucket teeth, always check that there is no one in the surrounding area.**
- **Do not allow unauthorized personnel in the work area while working.**

• Bucket tooth <V13SY or V17S>
Removal

1. Clean the bucket and park the machine in a flat, safe place where the ground is hard.

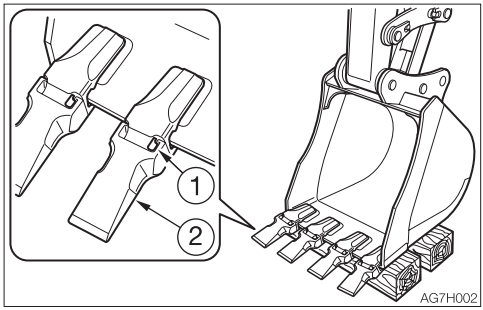

2. Set the bottom surface of the bucket flat and lower it on a block so that the locking pin (1) can be knocked out.
3. Remove the key, then check that the bucket is stable.

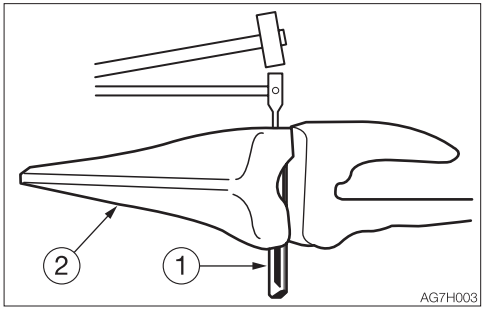

4. Place a rod against the locking pin (1) and knock the locking pin out by hammering against the rod.
   The rod should be round and thinner than the locking pin.

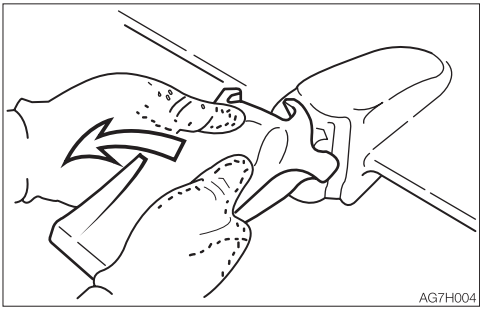

5. Remove the tooth point (2). Some tooth points (2) are of the type that are removed by turning (twisting) them counterclockwise.
   The same procedure can be used to remove the other tooth points.

Installation

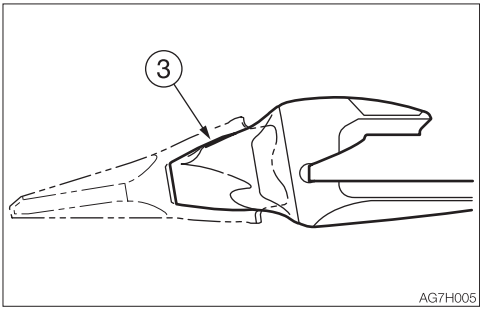

1. Clean the adapter nose (3). If there is gravel or mud on the adapter nose, the tooth point will not go in all the way and the pin cannot be driven in.

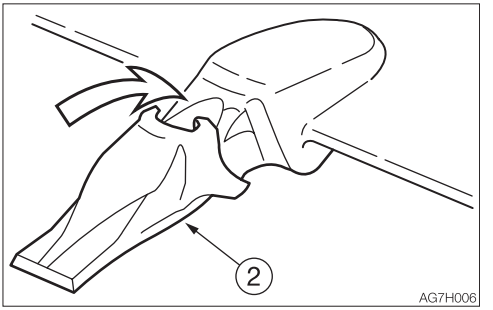

2. Put the tooth point (2) in the adapter nose (3).
   Push in firmly until the tooth point (2) touches the tip of the adapter nose(3).
   Some tooth points (2) are of the type that are installed by turning (twisting) them clockwise.

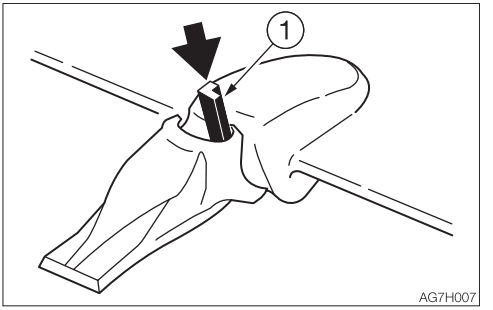

3. Insert the locking pin (1), making sure it is in the right direction.

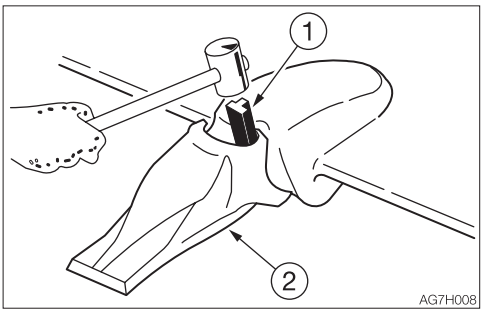

4. Drive in the locking pin (1) with a hammer until it is flush with the tip of the tooth point (2) ear.

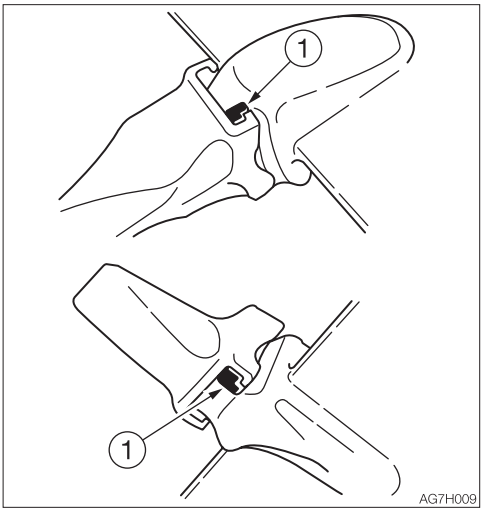

5. The locking pin (1) is now driven in.
   The same procedure can be used to install the other tooth points.

• Side cutter
Installation

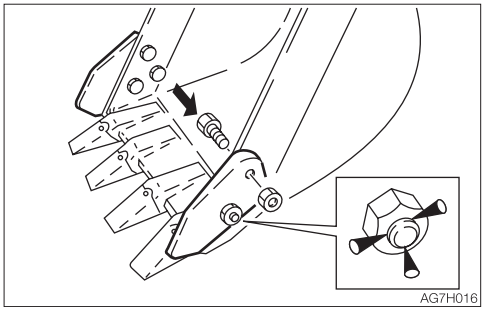

1. Insert the bolts from the inner of the bucket and tighten the side cutterwith nuts.
   Tightening torque: 241 N·m (178 ft-lb)
2. Caulk the bolts with a punch at three spots along the periphery of the screw to prevent the nuts from coming loose.

REPLACING THE BUCKET

⚠ WARNING

- **Before performing maintenance or repairs under the machine, lower all working equipment to the ground or in the lowermost position.**
- **If maintenance must be performed with the engine running, always work as a two person team communicating each other.**
  - **One person must sit in the operator's seat so that he/she can immediately stop the engine when necessary. He/she must take care not to touch the lever or pedal unless necessary.**
  - **The one who performs maintenance must make sure to keep his/her body or clothing away from the moving part of the machine.**
- **When using a hammer, pins may fly out or metal particles may be scattered. This may lead to serious injury.**
  - **If hard metal parts such as pins, bucket teeth, side cutter or bearings are hit with a hammer, wear protective gear such as safety goggles and gloves.**
  - **When hitting pins or bucket teeth, always check that there is no one in the surrounding area.**
- **When aligning the pin holes, always do so by checking them visually. Do not insert your finger in the pin hole, or you could lose your finger.**

Removing

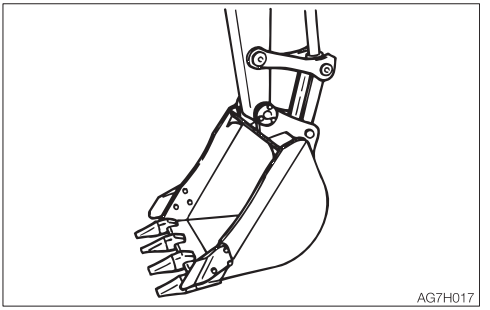

1. Lower the bucket to the ground as shown on the figure above in a stable position.

Note: When removing pins, set the bucket so that it is barely touching the ground. If the bucket is firmly touching the ground, the resistance will be great and it will be difficult to remove the pin.

2. Set the safety lock lever to the locked position and stop the engine.

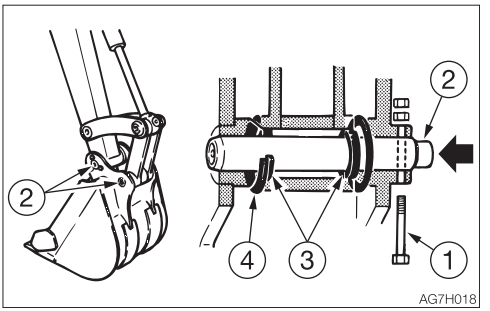

3. Remove the bolt (1).
4. Hammer the pin (2) out of the bucket.
5. Remove the bucket.
   Inspect the pin seal (3) and replace it if it is deformed or damaged. (See next page.)

Installation

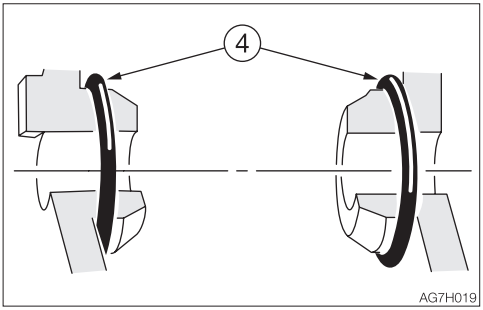

1. Set the O-ring (4) on the bucket as shown on the figure above.

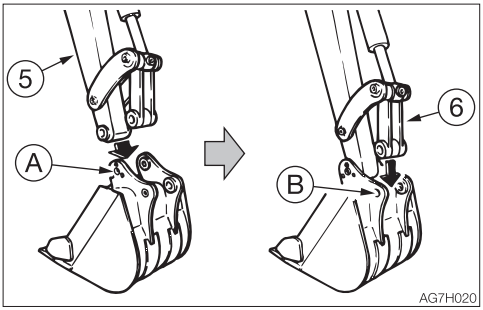

2. Align the pin hole (A) on the bucket with the pin hole on the arm (5), and install the pin (2).
3. Operate the cylinder, align the pin hole (B) on the bucket with the pin hole on the link arm (6), and install the pin (2).

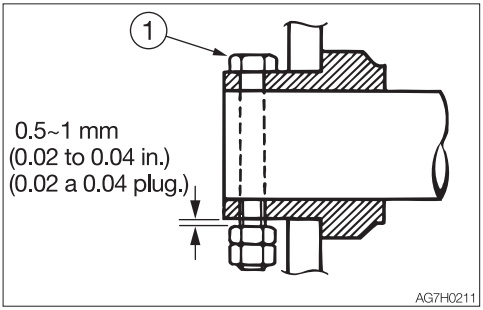

4. Align the turn prevention holes, and then install the bolt (1) and the nut. Be sure to leave a gap of about 0.5 to 1 mm (0.02 to 0.04 in.) between the nut and bucket bush, or the nut will come loose.

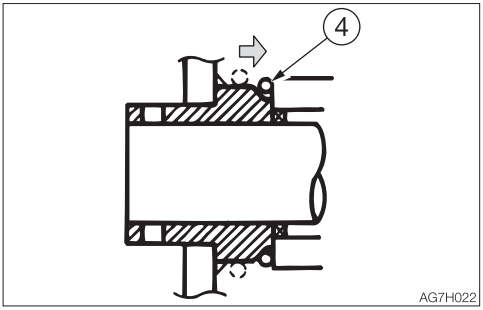

5. Adjust the gap between the bucket and the arm.
   Refer to “Adjusting the gap between the bucket and arm (If equipped)” on page 5-65.
6. Slide the O-ring (4).

Replacing the pin seal

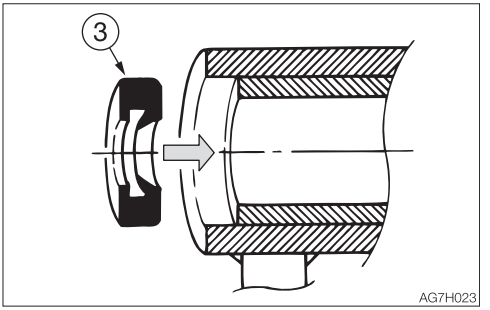

1. Set the pin seal (3) in the direction shown on the figure above.
2. Use a mallet to slowly press the pin seal in. Be careful not to damage the seal.

ADJUSTING THE GAP BETWEEN THE BUCKET AND ARM (IF EQUIPPED)

⚠ WARNING

- **Before performing maintenance or repairs under the machine, lower all working equipment to the ground or in the lowermost position.**
- **To prevent unexpected movement, securely block the working equipment when adjusting the gap.**

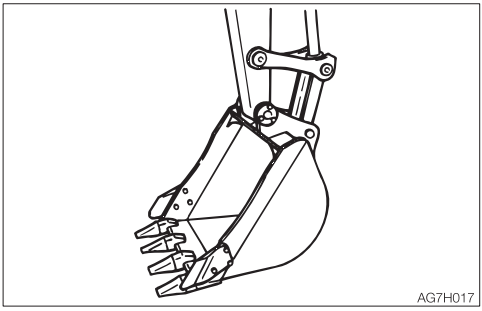

1. Lower the bucket to the ground as shown on the figure above in a stable position.
2. Check that the bucket dose not move, and then set the safety lock lever to the locked position and stop the engine.

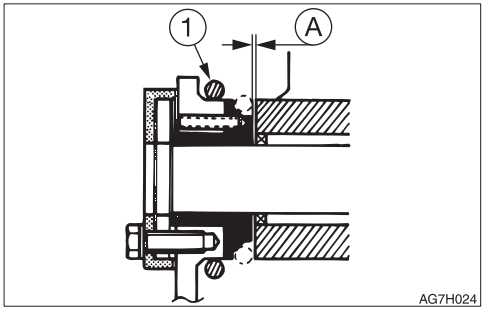

3. Move the O-ring (1) to bring the gap (A) into view and measure the width of the gap (A).
   The gap (A) should be 0.5 mm (0.02 in.).
   Swing the upperstructure slightly to the left and lightly press the arm point to the left side of the bucket (the side without an adjuster).

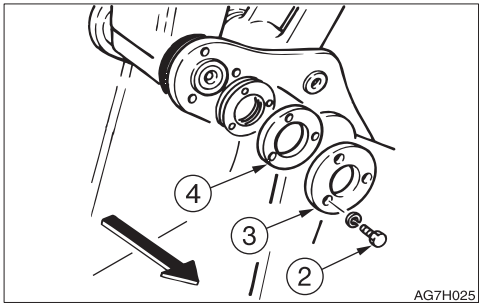

4. Remove the three bolts (2), the end plate (3) and flange (4).

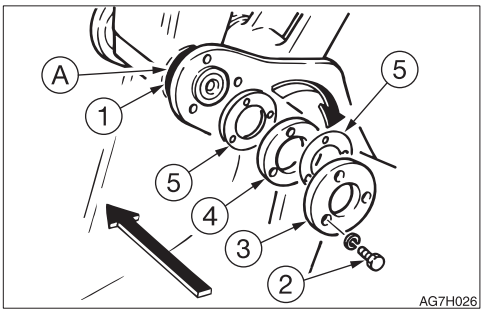

5. Pull out the adjustment shim(s) (5) corresponding to the gap (A) from between the flange (4) and the bucket body.
   Adjustment shim thickness : 0.5 mm (0.02 in.)
   Be careful that the gap is no less than 0.5 mm (0.02 in.) after adjustment.

Note:
Example (for a gap of 2 mm or 0.08 in.):
2 mm - 0.5 mm (standard value)= 1.5 mm (0.06 in.)
In the above example, three shims (5) should be removed.

6. Insert the adjustment shim(s) (5) removed in step 5 above between the end plate (3) and the flange (4), and then fasten it in place with the three bolts (2).
   · Tightening torque for bolts (2): 83 N·m (61.5 ft-lb.)
7. Return the O-ring (1) to the original position.

INSPECTING AND REPLENISHING THE WINDSHIELD WASHER FLUID

⚠ WARNING

Choose ethyl alcohol as washer solution. Do not use methyl alcohol as washer solution. It could damage the eyes.

Use a windshield washer fluid designed specifically for motor vehicles. Follow the instructions included with the washer fluid.

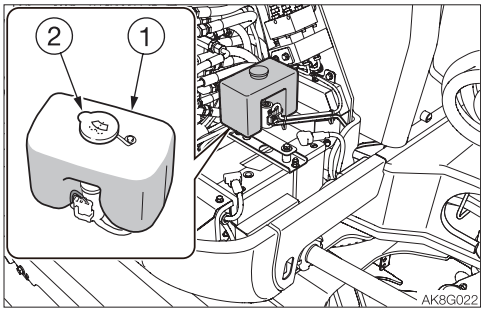

Inspection
1. Open the right side cover.
2. Inspect the washer tank (1) and add washer fluid if the level is low.

Note: The shape of the washer tank (1) varies depending on the specifications.

Replenishing
1. Mix the washer fluid to the prescribed concentration.
2. Remove the cap (2) and add washer fluid. Keep the dust away while replenishing the washer fluid.
3. Install the cap (2).

INSPECTING AND CLEANING THE DPF SOOT FILTER

For the inspection and maintenance of the DPF soot filter or oxidation catalyst, follow the procedure below.
This operation requires experience. Ask your sales or service dealer for it.

- Do not modify the DPF without permission. If modified, it may be damaged or malfunction may occur. As a result, an expensive repair work may be required.
- Do not reuse the DPF that has been dropped to the ground. There is catalyst fitted inside the DPF. It can be damaged if strong shocks are applied to it.

• Soot filter
Cleaning:
The soot filter must be cleaned if any of the error codes listed below appears. When cleaning becomes necessary, the ECM error warning lamp or the vehicle and engine emergency lamp starts flashing and an alarm is sounded.
Display the engine error code screen to check the SPN and FMI numbers.

Error code		Classification	Description
SPN	FMI		
3719	7	Warning	DPF recovery regeneration inhibit
3719	9	Warning	DPF recovery regeneration failure
3720	0	Warning	DPF ash cleaning request 2
3720	16	Caution	DPF ash cleaning request 1
522573	0	Caution	DPF over accumulation
522574	0	Caution	DPF over accumulation

Replacement:
Replace every 9000 hours.

• Oxidation catalyst
Replacement:
Replace every 9000 hours.

DRAINING THE WATER FROM THE WATER SEPARATOR

⚠ WARNING

- **Do not smoke or permit open flames while handling fuel or working on the fuel system.**
- **Stop the engine in a well-ventilated place and allow it to cool down before performing maintenance.**
- **Clean up spilled fuel immediately.**

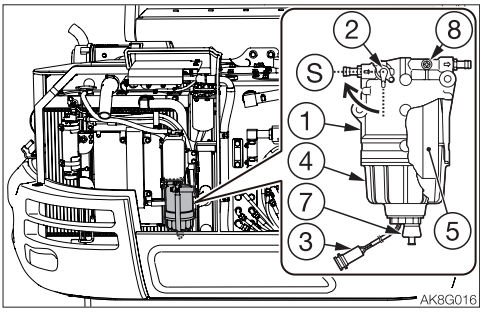

1. Open the right side cover.
2. Place a pan under the drain valve (7) to catch fuel.
3. Open the drain valve (7) and drain the water.
   If the water does not drain easily, loosen the plug (8).
4. Close the drain valve (7) and tighten the plug (8).
   Refer to “Bleeding air from the fuel system” on page 6-12.

LUBRICATING THE LEVERS AND PEDALS

⚠ WARNING

Set the machine to the parking posture, stop the engine, remove the starter key and store it. Failure to do so may result in the machine moving abruptly, leading to serious injury or death.

If the levers or pedals no longer move smoothly, grease them.

Operating levers

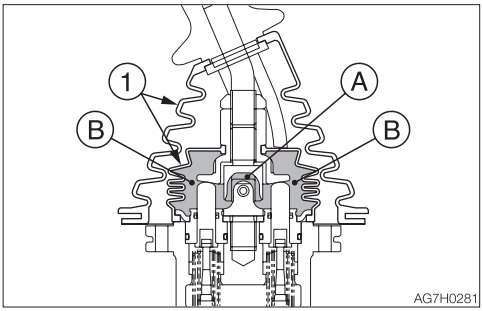

Travel levers/pedals

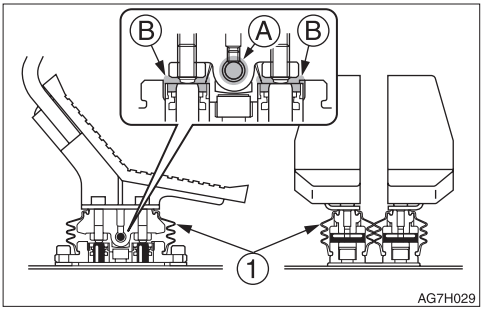

1. Remove the lower mount section of the boot (1) and turn it upward.
2. Wipe off the old grease.
3. Apply grease to points (A) and (B).
4. Set the boot (1) back as it was.

Boom swing pedal

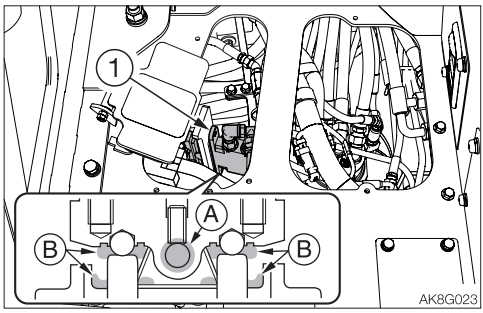

1. Remove the cover and floor mat.
2. Remove the lower mount section of the boot (1) and turn it upward.
3. Wipe off the old grease.
4. Apply grease to points (A) and (B).
5. Set the boot (1) back as it was.

Dozer blade lever

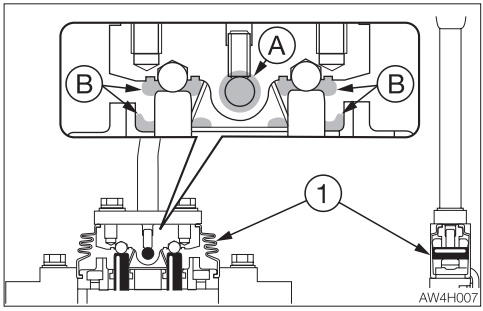

1. Remove the lower mount section of the boot (1) and turn it upward.
2. Wipe off the old grease.
3. Apply grease to points (A) and (B).
4. Set the boot (1) back as it was.

INSPECTING THE RUBBER CRAWLERS

Repair or replace the rubber crawlers if their condition becomes as described below. Consult your sales or service dealer for repair or replacement.

Rubber crawler
Replace the crawler if the entire crawler is stretched and cannot be adjusted.

(1) Lug

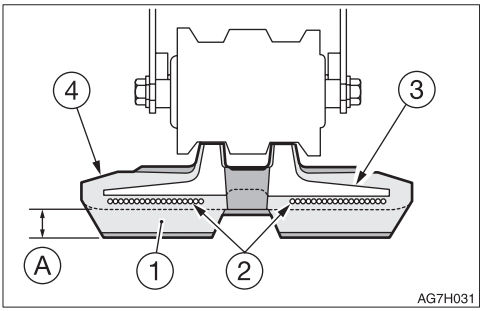

Replace if the height of (A) is 5 mm (0.2 in.) or below.

(2) Steel cord

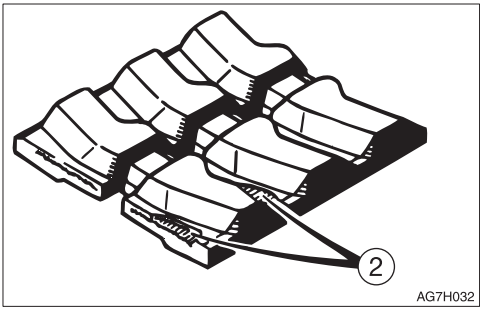

Replace if the steel cord is exposed for two links or more.
Replace if the half or more of the steel cords on one side are cut.

(3) Metal core

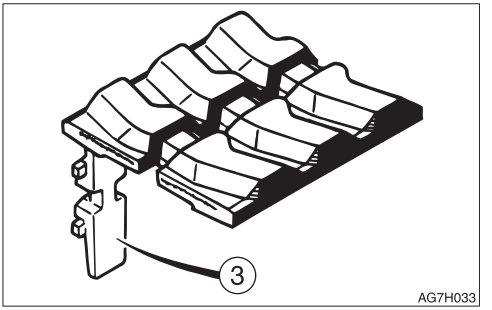

Replace if even one metal core is off.

(4) Rubber

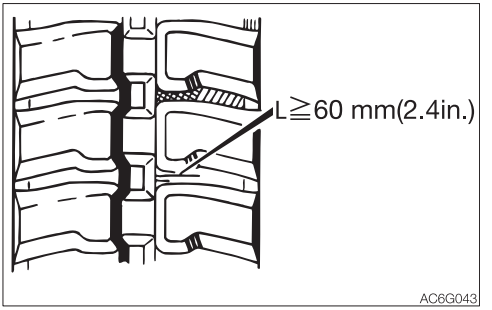

Repair if there are cracks of 60 mm (2.4 in.) or greater in length.
If the steel cord is visible, repair as soon as possible, regardless of the length of the crack.

REPLACING THE RUBBER CRAWLERS

⚠ WARNING

- **If you must work beneath the raised machine or working equipment, always use wood blocks, jack-stands or other rigid and stable supports. Never get under the machine or working equipment if they are not sufficiently supported.**
- **If maintenance must be performed with the engine running, always work as a two person team communicating each other.**
  - **One person must sit in the operator's seat so that he/she can immediately stop the engine when necessary. He/she must take care not to touch the lever or pedal unless necessary.**
  - **The one who performs maintenance must make sure to keep his/her body or clothing away from the moving part of the machine.**

Removal

1. Fully release the tension of the rubber crawler.
   Refer to "Inspecting and adjusting the crawler tension" on page 5-28.

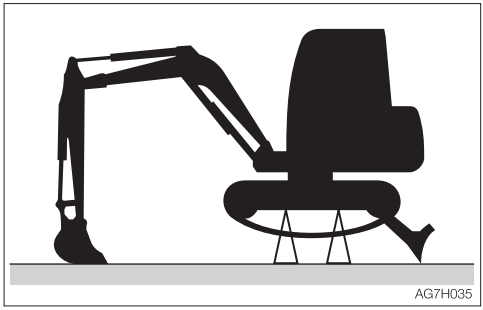

2. Use the working equipment to lift the body.

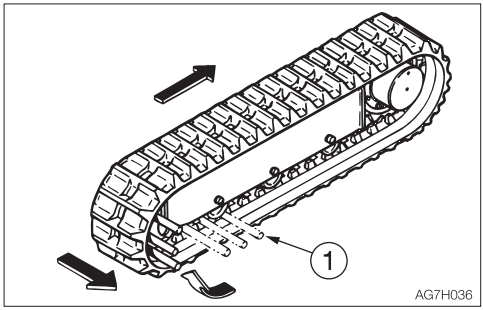

3. Set an iron pipe (1) in the rubber crawler and turn the sprocket slowly in the reverse direction.
4. Turn until the iron pipe (1) is directly next to the idler and the rubber crawler lifts away from the idler, then stop turning the sprocket.
5. Slide the rubber crawler sideways and remove it from the crawler frame.
   Remove the other rubber crawler using the same procedure.

Installation

1. Use the working equipment to lift the body.

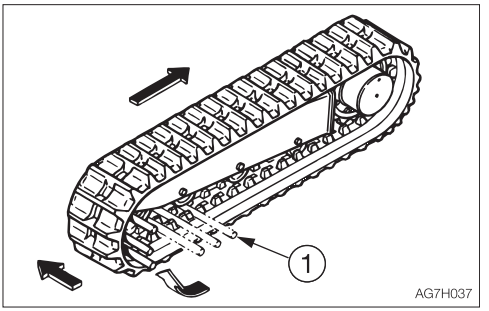

2. Set the rubber crawler on the sprocket.
3. Set an iron pipe (1) in the rubber crawler and turn the sprocket slowly in the reverse direction.
4. Turn until the iron pipe (1) is directly next to the idler and the rubber crawler lifts away from the idler, then stop turning the sprocket.
5. Slide the rubber crawler inward, engage it on the idler, then pull out the iron pipe.
6. Check that the rubber crawler is securely engaged on the sprocket and idler.
7. Tighten the rubber crawler to the standard tension.
   Refer to “Inspecting and adjusting the crawler tension” on page 5-28.
8. Install the other rubber crawler using the same procedure.

EVERY 2 YEARS

REPLACING THE RECEIVER DRYER

This operation requires experience. Ask your sales or service dealer for it.

MAINTENANCE DURING EXTENDED STORAGE PERIOD

Storage procedures

If the machine is to be stored for 30 days or more, store it indoors. If it must be stored outdoors, park the machine on a surface laid with lumber on a flat ground, and place a waterproof cover over it so that it stays dry.

1. Clean the machine.
2. Inspect for oil leakage, water leakage, cracks and loose nuts and bolts.
3. Add fuel and replace the hydraulic oil and oil.
4. To prevent rusting and freezing, replace the engine coolant with long-life coolant (LLC).
   Refer to “Cleaning the engine cooling system” on page 5-52.
5. Use the grease gun to lubricate the grease fittings.
6. Fully retract the bucket and arm cylinders and lower the bucket and dozer blade to the ground.
7. Apply rust-inhibiting oil to the hydraulic cylinder rods.
8. Disconnect the negative cable from the battery and cover the battery to prevent freezing.

During storage

⚠ WARNING

- **Do not operate the machine in an enclosed area without adequate ventilation.**
- **If natural ventilation is not possible, install ventilators, fans, exhaust extension pipes or other venting devices.**

1. To prevent rusting, operate the machine once a month so that the oil can be circulated throughout the system.
2. Inspect the battery and recharge it as necessary.
   Ask your sales or service dealer for recharging.

Starting the machine after storage

IMPORTANT: If the above “Storage procedures” have not been followed during the extended storage periods, consult your sales or service dealer before starting the machine again.

1. Wipe off the rust-inhibiting oil that was applied on the piston rods of the hydraulic oil cylinders.
2. Add oil or grease as necessary.

Returning the engine to service

1. Perform the daily checks.
2. The engine should be pre-oiled before startup.
   a. Crank the engine, leaving the fuel system shut off so the engine will not start, for 15 seconds.
   b. Then pause for 30 seconds.
   c. Repeat the procedure until you have cranked the engine for a total of one minute. This will circulate the oil in the engine's lubrication system.
3. Prime the fuel system.
4. Start the engine. Allow the engine to idle for approximately 15 minutes while you check for:
   - Proper oil pressure
   - Fuel, engine oil or coolant leaks
   - Proper operation of the indicators and/or gauges
5. Avoid prolonged operation at minimum or maximum engine speeds and loads for the remainder of the first hour of operation.

TROUBLESHOOTING



SYMPTOMS THAT ARE NOT MALFUNCTIONS

The symptoms listed below are not malfunctions.

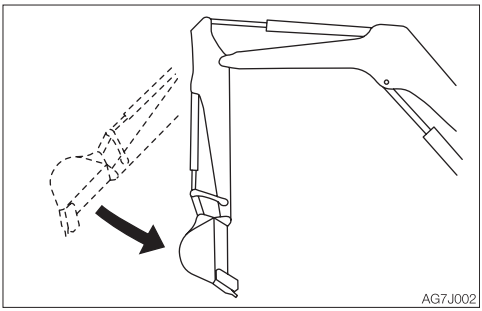

- The arm retracting speed momentarily slows down when it reaches an almost vertical position while the engine is running at low speed.

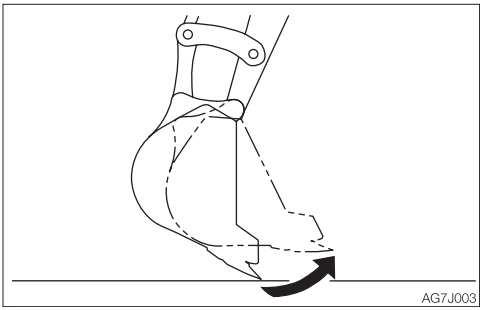

- The bucket teeth moving speed momentarily slows down when it reaches an almost horizontal position while the engine is running at low speed.
- The slew motor produces noise at the beginning and end of the slewing.
- The travel motor produces noise when stopped suddenly from its high speed traveling.
- The control valve produces noise if excessive force is applied to the working equipment or when it moved to the stroke end.
- It becomes less easy to operate the machine when an attachment weighing more than a standard arm or bucket is installed.
- In some cases smoke may be emitted from the tail pipe while the DPF regeneration is being performed. This is not a failure; it is due to burning of the particulate matter (PM).
- In some cases the noise associated with the DPF regeneration operation or cancel operation may change; this is not a failure.

IF THE ENGINE OVERHEATS

⚠ WARNING

- **Do not open the engine hood when steam is coming from it. The steam or hot water may spurt out and cause burns.**
- **Do not try to remove the radiator cap or the drain plug when the cooling water is hot. Stop the engine, wait until the engine and the radiator cool, and then slowly loosen the radiator cap to release the internal pressure.**
- **Before performing maintenance, stop the engine and allow the machine to cool down.**

The symptoms listed below indicate overheating.

< Canopy >

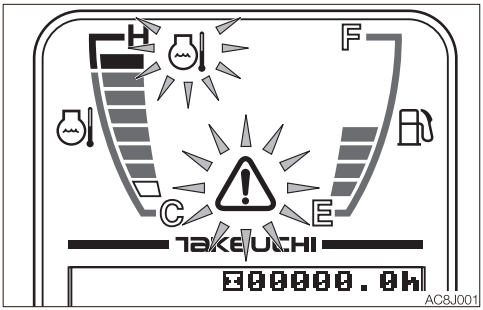

< Cab >

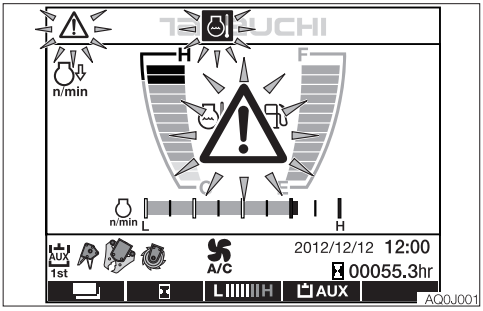

- An alarm is sounded and the engine emergency lamp and the coolant temperature warning lamp start flashing.
- The water temperature gauge level is in the red zone.
- Steam comes from the engine room.

Remedy procedure

1. Park the machine in a safe place.
2. Check if steam is coming out of the closed engine hood.
3. If there is steam, stop the engine immediately and contact your sales or service dealer for repair. If steam, is not coming out run the engine at low idle and let the water temperature cool down.
4. When the water temperature gauge level drops in the green zone, stop the engine.
5. Perform the inspections and the remedies listed below once the engine cools down.
   - Fan belt slack..... Adjust
     Refer to page 5-25.
   - Coolant level ..... Add
     Refer to page 5-20.
   - Water leakage..... Repair
   - Radiator fins..... Clean
     Refer to page 5-39.
   - Sediment in cooling system
     ..... Clean
     Refer to page 5-52.

If the problem persists after the above remedies, contact your sales or service dealer for repair.

IF THE BATTERY GOES DEAD

The symptoms below indicate that the battery is dead.
- The starter motor does not turn or fails to start the engine.
- The horn is too weak.

Remedy procedure
Start the engine using the booster battery on the other vehicle (booster vehicle) and the jumper cables.

⚠ WARNING

- **When starting the engine using the jumper cables, be sure to connect the cables by following the proper steps. Improper use of jumper cables can result in battery explosion or unexpected machine motion.**
  - **Do not allow the booster vehicle and the machine with a dead battery (dead machine) to touch each other.**
  - **Do not allow the positive (+) and the negative (–) clips of the jumper cables to touch each other.**
  - **When connecting, attach the jumper cable to the positive (+) terminals first. When disconnecting, remove the cable from the negative (–) terminal (ground) first.**
  - **Connect the last clip of the jumper cable to a point as far away from the battery as possible.**
- **Always wear the protective goggle when jump starting the engine by using the jumper cables.**
- **Set the battery charging current to at or below one tenth of the rated capacity. Too high charging current could cause the battery to leak or be depleted, resulting in explosion if ignited.**

IMPORTANT: Use the jumper cables and clips of a size suited to the capacity of battery. Do not use damaged or corroded jumper cables and clips.

IMPORTANT: Be sure that the battery of the booster vehicle has the same capacity as the battery of the dead machine.
IMPORTANT: Be sure to connect the clips securely.

Connecting the jumper cables

IMPORTANT: Set the starter keys of the booster vehicle and the dead machine to the OFF position.

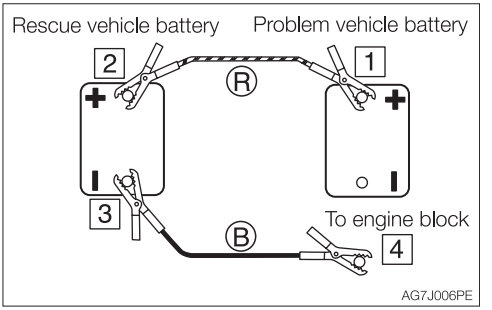

1. Connect the clip of jumper cable (R) to the positive (+) battery terminal of the dead machine.
2. Connect the other clip of jumper cable (R) to the positive (+) battery terminal of the booster vehicle.
3. Connect the clip of jumper cable (B) to the negative (–) battery terminal of the booster vehicle.
4. Connect the other clip of jumper cable (B) to the engine block of the dead machine. Connect the clip to a place as far from the battery as possible.

Starting the engine
1. Check that the clips are securely connected to the terminals.
2. Start the engine of the booster vehicle and run it at high speed.
3. Start the engine of the dead machine.

Disconnecting the jumper cables

Once the dead machine is successfully running, remove the jumper cables by following the same steps as for connection in the reverse order.

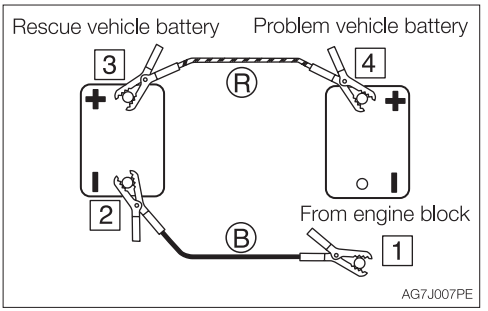

1. Disconnect the clip of jumper cable (B) from the engine block of the dead machine.
2. Disconnect the other clip of jumper cable (B) from the negative (–) battery terminal of the booster vehicle.
3. Disconnect the clip of jumper cable (R) from the positive (+) battery terminal of the booster vehicle.
4. Disconnect the clip of jumper cable (R) from the positive (+) battery terminal of the dead machine.

Recharging

Ask your sales or service dealer for recharging the dead battery.

IF A FUSE BLOWS

If a light does not come on or the electrical system does not work, a fuse may be blown. Inspect the fuses.

INSPECTING AND REPLACING THE FUSE

⚠ WARNING

If the fuse blows again soon after replacement, then the electric system is likely faulty. It may pose a fire hazard if not properly repaired. Contact your sales or service dealer for advice.

1. Turn the starter key to the OFF position to stop the engine.

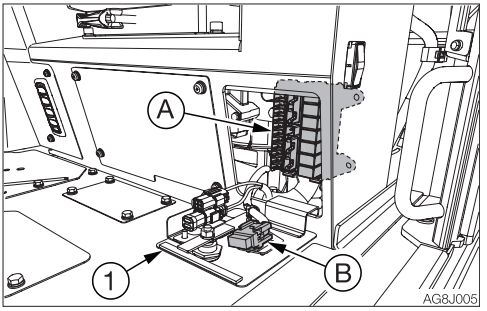

2. Open the fuse box cover (1).
3. Check for any blown fuses (A).

Note: Inspect the fuse (B) too if it is provided.

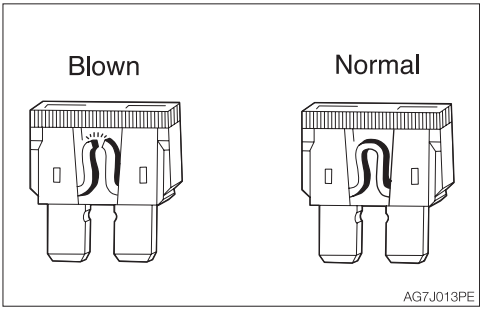

4. If a fuse is blown, replace it with a spare fuse of the same capacity.

Fuse layout and circuits protected (A)

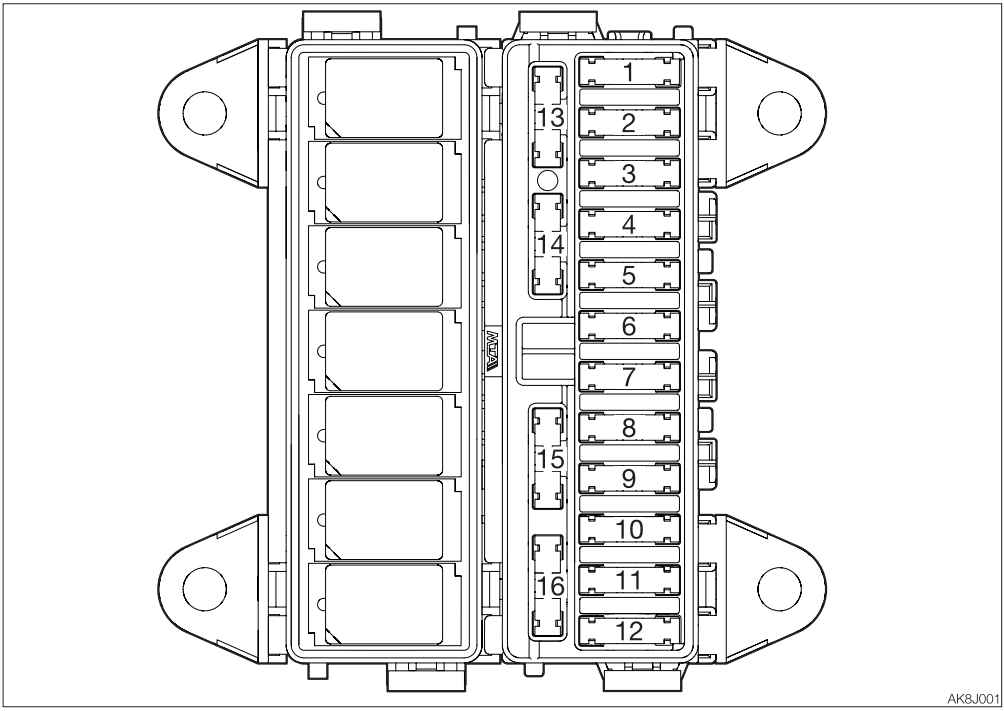

Fuse layout and circuits protected (B) (If equipped)

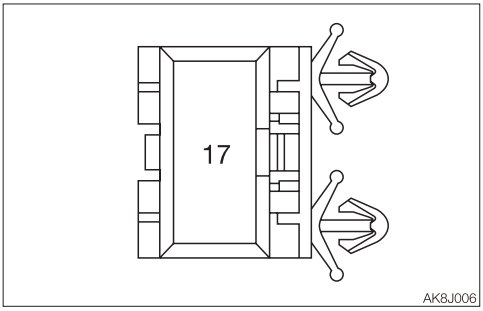

<Cab>

No.	Capacity	Symbol	Protected circuit	Fuse No.
1	20A		Lights	F1
2	10A 15A*		Wiper	F2
3	20A		Safety lock lever	F3
4	10A	CTL (2)	Controller power supply (2)	F4
5	10A	SOL	Solenoid	F5
6	20A	CAB	Cab interior power supply	F6
7	25A	OPT	Option	F7
8	10A		Compressor	F8
9	10A		Feed pump	F9
10	30A		Air conditioner blower motor	F10
11	20A	CAB	Cab light	F11
12	20A	CTL (1)	Controller power supply (1)	F12
13	5A		Switch lighting	F13
14	10A		Horn	F14
15	10A		Starter switch	F15
16	10A		Immobilizer	F16
17*	25A		Rear defroster	F19

*: Machines equipped with a rear wiper

<Canopy>

No.	Capacity	Symbol	Protected circuit	Fuse No.
1	20A	(1)	Lights (1)	F1
2				F2
3	20A		Safety lock lever	F3
4	15A	CTL	Controller power supply	F4
5	25A	SOL	Solenoid	F5
6	20A	OPT (1)	Option (1)	F6
7	25A	OPT (2)	Option (2)	F7
8				F8
9				F9
10	10A		Feed pump	F10
11				F11
12	15A	(2)	Lights (2)	F12
13	5A		Switch lighting	F13
14	10A		Horn	F14
15	5A		Starter switch	F15
16	10A		Immobilizer	F16