CLEANING THE CONDENSER (AC)

⚠ WARNING

Wear required appropriate equipment such as protective goggle and filter mask when using compressed air, as metal fragments or other objects can fly and cause serious injury.

IMPORTANT: Be careful not to damage the fins when cleaning.

- **When using compressed air or pressurized water, make sure the pressure is no higher than 200kPa (28 psi) and hold the nozzle sufficiently away from the fins.**

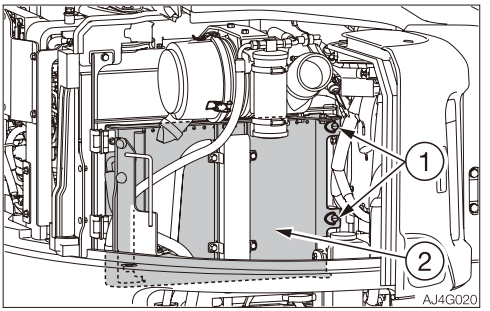

1. Open the engine hood and right side cover.
2. Clean the condenser (2).

INSPECTING THE REFRIGERANT (GAS) LEVEL (AC)

⚠ WARNING

- **Exposure of the eyes or hands to the cooler's refrigerant could result in blindness or frostbite. Never touch the refrigerant or loosen the parts of the cooling circuit.**
- **Keep flames away if the refrigerant gas is leaking.**
- **The high-pressure pipes of the air conditioner can be very hot (80 to 120°C or 176 to 248°F). Be careful not to burn yourself.**

The cooling capacity decreases if the amount of refrigerant is insufficient. Inspect the refrigerant level using the sight glass (2) on the top of the receiver dryer (1).

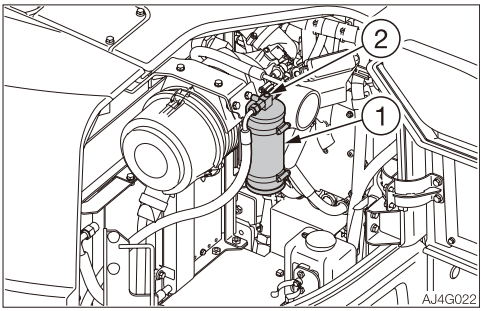

1. Open the right side cover.
2. Inspect the places for the conditions below.

Places for inspection	Conditions
Cab door	Fully open
Temperature control dial	Set fully to the COOL side
Fan speed	High
Ventilation / Circulation select lever	Circulation
Engine speed	Maximum speed
Air conditioner switch	ON

3. Inspect the refrigerant by watching the flow of air bubbles through the sight glass (2).
   Refer to "Check list for refrigerant volume" on page 5-49.
4. Tilt up the cab/canopy.
   Refer to "Tilting up the cab/canopy" on page 5-84.

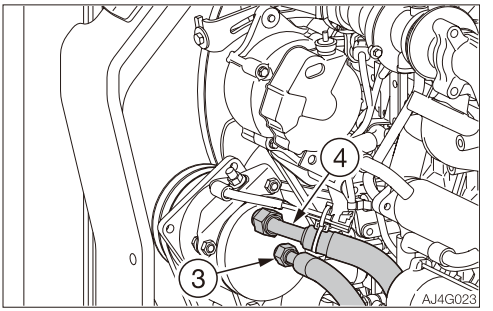

5. Check the temperature of the high-pressure pipe (3) and low-pressure pipe (4).
   Refer to "Check list for refrigerant volume" on page 5-49.

Check list for refrigerant volume

Air conditioner	Normal	Abnormal		
High/low pressure pipe temperature	High pressure pipe is hot (80 to 120°C or 176 to 248°F), low pressure pipe is cold (8 to 15°C or 46 to 59°F). Clear difference in temperature between the pipes.	High pressure pipe is warm, low pressure pipe is slightly cool. No significant difference in temperature between the pipes.	Little difference in temperature between the high-pressure pipe and the low-pressure pipe.	High pressure pipe is hot, low pressure pipe is slightly cool. A significant difference in temperature between the pipes.
Pipe connection	Normal	Some places are dirty with oil.	Some places are extremely dirty with oil.	Normal
Sight glass	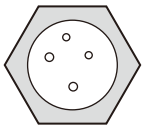 AG7G064 Almost transparent with some bubbles. Fully transparent when the engine speed is increased or decreased.	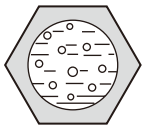 AG7G065 Flow of bubbles can be seen constantly. Sometimes transparent or white with bubbles.	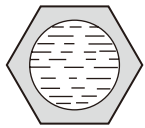 AG7G066 Mist-like flow is faintly visible.	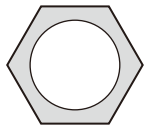 AG7G067 No bubbles is visible, even when the fan is set to High and the engine is idling.
Refrigerant level	Proper level	Refrigerant may be leaking.	Refrigerant has leaked; little is left.	Refrigerant level too high

If the air conditioner is not working

If the air conditioner does not work well, set the air conditioner switch to OFF and contact your sales or service dealer for inspection and/or repairs.

IMPORTANT:

- **Continued use of the air conditioner when it is not working properly will damage its various parts.**
- **Using the air conditioner when there is no refrigerant will damage the compressor.**
- **Always consult your sales or service dealer for replacing the refrigerant. Be sure to use R134a refrigerant (800 g or 1.76 lb.).**

EVERY 500 HOURS

REPLACING THE ENGINE OIL AND THE OIL FILTER

Refer to “Replacing the engine oil and the oil filter” on page 5-28.

REPLACING THE FUEL FILTER

⚠ WARNING

- **Do not smoke or permit open flames while handling fuel or working on the fuel system.**
- **Stop the engine in a well-ventilated place and allow it to cool down before performing maintenance.**
- **Clean up spilled fuel immediately.**

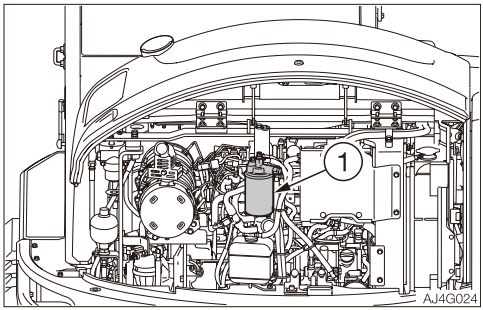

1. Open the engine hood.
2. Turn the filter (1) counterclockwise with the filter wrench and remove it.
3. Clean the surface of installation of the filter stand.
4. Apply a thin layer of oil on the packing of the new filter.
5. Install the new filter on the filter stand and tighten the filter firmly by hand.
6. Bleed the air.
   Refer to “Bleeding air from the fuel system” on page 6-13.

REPLACING THE WATER SEPARATOR FILTER

⚠ WARNING

- **Do not smoke or permit open flames while handling fuel or working on the fuel system.**
- **Stop the engine in a well-ventilated place and allow it to cool down before performing maintenance.**
- **Clean up spilled fuel immediately.**

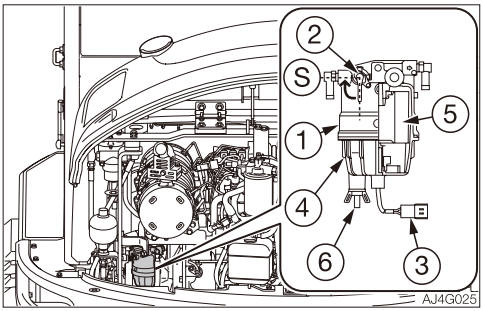

(S): Close

1. Open the engine hood.
2. Close the valve (2) of the water separator (1).
3. Place a pan for catching fuel under the drain hose.
4. Remove the sensor wiring coupler (3).
5. Remove the case (4) with the filter wrench.
6. Remove the element (5), and then clean the case. When doing the above, be careful not to damage the sensor.
7. Replace the packing with a new one and lubricate it with diesel fuel.
8. Install the new element (5) on the filter stand.
9. Tighten the case (4) by hand. Be sure to do it by hand.
   Tightening torque: 20 N·m (14.8 ft-lb)
10. Install the sensor wiring coupler (3).
11. Bleed air.
    Refer to “Bleeding air from the fuel system” on page 6-13.

INSPECTING THE SLEW PINION GEAR

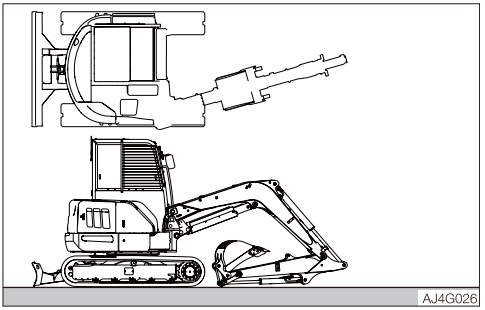

1. Stop the engine with the machine in the posture shown on the figure above.

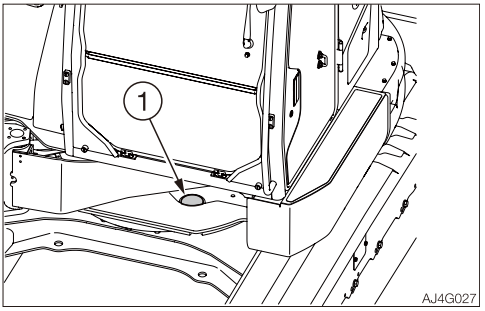

2. Remove the cap (1).
3. Make sure that the gear tooth surface of the slew bearing is well greased.
   If the surface is not adequately greased, add grease.
   If the grease has turned white due to water or mud entered it, replace the whole grease. Consult your sales or service dealer for help.
   Grease full capacity: 5 L (1.3 US gal) or 4.5 kg (10 lbs.)
4. Install the cap (1).

REPLACING THE FAN BELT

This operation requires experience. Ask a Takeuchi service dealer for it.
Replace the fan belt after two-year operation even if the running time is less than 500 hours.

CLEANING THE WATER JACKET (INSIDE THE RADIATOR)

This operation requires experience. Ask your sales or service dealer for it.

EVERY 1000 HOURS

REPLACING THE HYDRAULIC OIL RETURN FILTER

Refer to “Replacing the hydraulic oil return filter” on page 5-39.

REPLACING THE PILOT LINE FILTER

Refer to “Replacing the pilot line filter” on page 5-40.

REPLACING THE TRAVEL MOTOR GEAR OIL

Refer to “Replacing the travel motor gear oil” on page 5-41.

REPLACING THE AIR CLEANER ELEMENT

⚠ WARNING

Stop the engine and allow the machine to cool down before performing maintenance.

- **The engine, muffler, radiator and many other parts of the machine are hot immediately after the engine is stopped. Touching these parts will cause burns.**

IMPORTANT:

- **Do not use an element if its pleats, gaskets or seals are damaged.**
- **Be sure to install the element and dust cap securely. If not, dust could be drain into the cylinder, damaging the engine.**

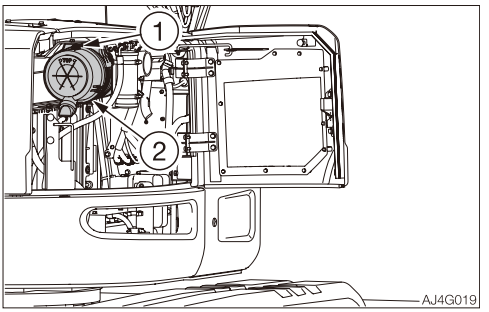

1. Open the right side cover.

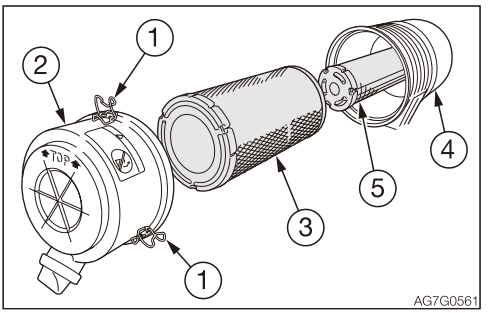

2. Loosen the clamps (1) and remove the dust cup (2).
3. Clean the inside of the dust cup (2).
4. Remove the primary element (3).
5. Do not yet remove the secondary element (5).
6. Clean the inside of the body (4).
7. Remove the secondary element (5).
8. Install the new elements.
9. Install the dust cup (2) with its "⬆ TOP ⬆" mark facing up, and then fasten it with the clamps (1).

REPLACING THE AIR BREATHER FILTER

⚠ WARNING

Oil may spurt out if caps or filters are removed or pipes are disconnected before releasing the pressure in the hydraulic system.

- **Press the air breather button to relieve the tank pressure.**

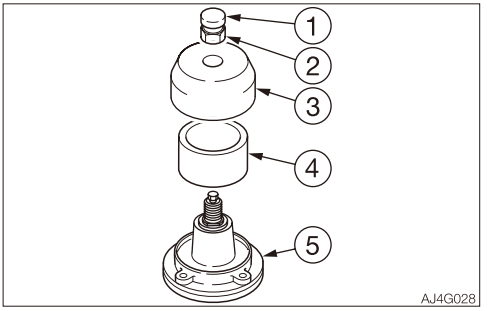

1. Open the maintenance cover.
2. Press the button (1) to relieve the internal pressure from the tank.
3. Remove the nut (2) on the air breather.
4. Remove the cover (3).
5. Replace the filter (4).
6. Install the cover (3) on the body (5).
7. Install the nut (2).

INSPECTING AND ADJUSTING THE ENGINE VALVE CLEARANCE

This operation requires experience. Ask your sales or service dealer for it.

EVERY 1500 HOURS

REPLACING THE OIL SEPARATOR ELEMENT

⚠ WARNING

- **Stop the engine and allow the machine to cool down before performing maintenance.**
  - **The engine, muffler, radiator, hydraulic lines, sliding parts and many other parts of the machine are hot immediately after the engine is stopped. Touching these parts will cause burns.**
  - **Stay clear of all rotating and moving parts. If a hand or tool becomes trapped in the rotating or moving part, serious injury or death could result.**
- **Be sure to secure the rear door or radiator before working the inside.**

1. Open the engine hood.

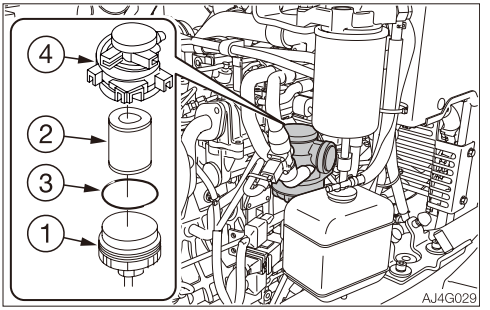

2. Remove the cover (1) and remove it.
3. Remove the element (2) and the gasket (3).
4. Wipe off the oil and grease on the case (4).
5. Set the new element and gasket in the case (4).
6. Tighten the cover (1).

INSPECTING THE INJECTOR TIP

This operation requires experience. Ask your sales or service dealer for it.

INSPECTING THE EGR COOLER

This operation requires experience. Ask your sales or service dealer for it.

INSPECTING THE PCV VALVE

This operation requires experience. Ask your sales or service dealer for it.

EVERY 2000 HOURS

CLEANING THE ENGINE COOLING SYSTEM

Replace the coolant after the two-year operation even if the running time is less than 2000 hours.

⚠ WARNING

- **Stop the engine and allow the machine to cool down before performing maintenance.**
  - **The engine, muffler, radiator and many other parts of the machine are hot immediately after the engine is stopped. Touching these parts will cause burns.**
  - **The engine coolant is also hot and under high pressure immediately after the engine is stopped. Be careful when loosening the caps or plugs. Working on the machine under these conditions could result in burns or injuries due to the hot coolant spurting out.**
- **If maintenance must be performed with the engine running, always work as a two person team communicating each other.**
  - **One person must sit in the operator's seat so that he/she can immediately stop the engine when necessary. He/she must take care not to touch the lever or pedal unless necessary.**
  - **The one who performs maintenance must make sure to keep his/her body or clothing away from the moving part of the machine.**
- **Standing at the back of the machine while the engine is running is extremely dangerous, as the machine could move suddenly. Never stand at the back of the machine while the engine is running.**
- **Do not remove the radiator cap or the drain plug when the cooling water is hot. Stop the engine and wait until the engine and the cooling water cool. Then, slowly loosen the radiator cap and the drain plug to remove them.**

When cleaning, if the temperature of the coolant is low, the thermostat will be closed and the coolant will not circulate in the radiator. Heat the coolant water to at least 90°C (194°F) before cleaning.

1. Open the engine hood.

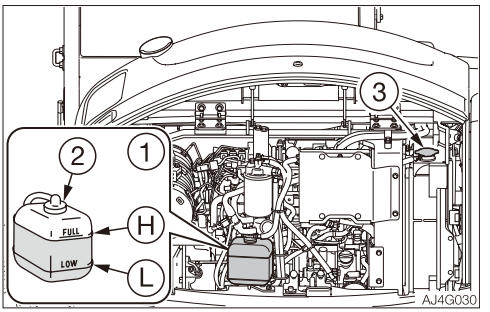

2. Gradually loosen the radiator cap (3) to release the internal pressure, and then remove the cap.

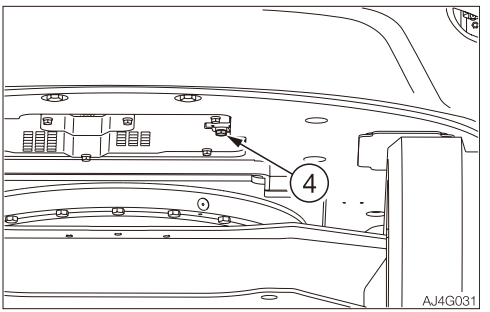

3. Place a pan for catching the waste coolant under the drain plug (4), and then loosen the drain plug (4) to drain the coolant.
4. Tighten the drain plug (4).
5. Add tap water to the radiator through the coolant fill port up to the top of the port. Take time and slowly add water, so that no air enters the radiator.
6. Close the radiator cap (3).
7. Start the engine and run it at a speed slightly above low idling. Raise the water temperature to at least 90°C (194°F), and then run the engine for about 10 minutes with the thermostat open.

8. Stop the engine, wait until the cooling water temperature becomes lower, and then remove the drain plug (4) to drain the water.
9. After draining, clean the cooling system using a cleaning agent. When using the cleaning agent, follow the instructions included with the agent.
10. Repeat the steps 4 to 8 to rinse the cooling system.
11. Tighten the drain plug (4).
12. Take time and slowly add the new coolant (mixture of antifreeze and tap water) to the radiator through the fill port until it is full.
13. Close the radiator cap (3).
14. Warm up the engine. Use the meters to check that there are no irregularities in the cooling system at this time.
15. Increase the water temperature to at least 90°C (194°F). Then, run the engine for about 10 minutes with the thermostat kept open.
16. Stop the engine, wait until the cooling water temperature becomes lower, and then check the level of coolant in the radiator.
    If necessary, add cooling water until the radiator is full.
17. Close the radiator cap (3).
18. Clean the interior of the reserve tank (1), and then add coolant to the upper limit (H).
19. When the coolant has been replaced, inspect the coolant level once again after operating the machine.
    When the machine is operated, the coolant is distributed throughout the entire system, resulting in the lower coolant level.
    Add coolant up to the full level.

INSPECTING THE ACCUMULATOR (IF EQUIPPED)

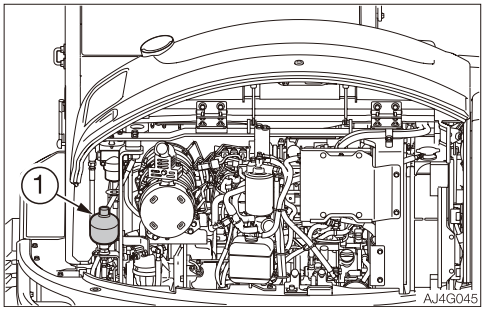

⚠ WARNING

- **High-pressure nitrogen gas is enclosed in the accumulator (1). If handled incorrectly, it could explode and cause serious injury. Strictly observe the following precautions:**
  - **Do not disassemble.**
  - **Do not allow flame nearby or throw it into a fire.**
  - **Do not drill, weld or fuse.**
  - **Do not subject it to physical shock such as hitting, rolling or dropping.**
  - **Before disposing of the unit, the sealed gas must be drained. Contact a Takeuchi sales or service dealer for help.**
- **Clear all personnel from the work area.**
- **Sound the horn to warn people around the machine.**

IMPORTANT: If the accumulator (1) fails, the boom cannot be lowered or the residual pressure in the hydraulic circuit cannot be released while the engine is stopped.

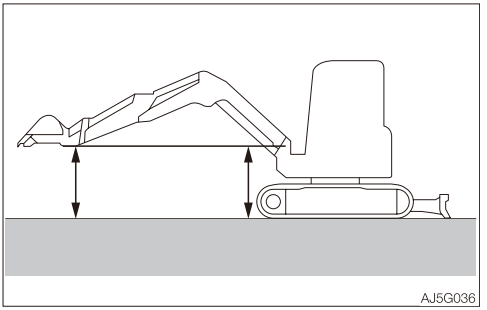

1. Start the engine, then fully retract the arm and bucket cylinders.
2. Operate the boom so that the tip of the arm is positioned at the bottom of the boom.

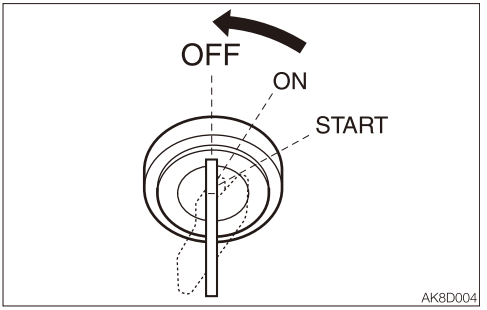

3. Turn the starter key to the OFF position to stop the engine.

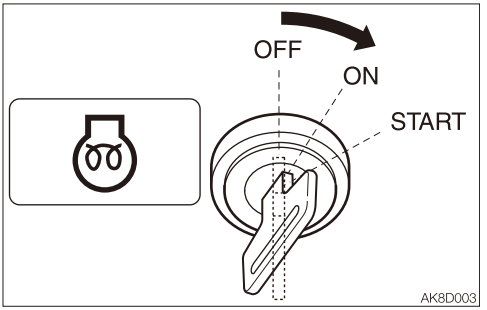

4. Turn the key to the ON position. (Do not start the engine.)

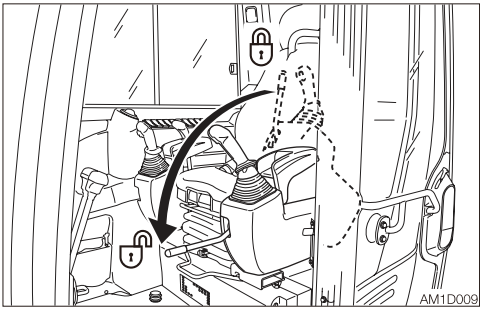

5. Fully lower the safety lock lever to disengage the lock.

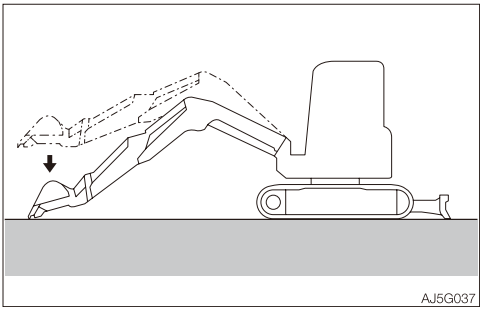

6. Lower the boom until the bucket contacts the ground.
   The machine is normal if the bucket is lowered to the ground. The accumulator (1) is probably faulty if the boom cannot be lowered or stops halfway. Consult a Takeuchi sales or service dealer for help.

Note: When the boom is lowered to lower the bucket to the ground, do it within 10 minutes of stopping the engine.

EVERY 3000 HOURS

INSPECTING THE TURBOCHARGER

This operation requires experience. Ask your sales or service dealer for it.

INSPECTING THE EGR SYSTEM

This operation requires experience. Ask your sales or service dealer for it.

EVERY 4000 HOURS

REPLACING THE HYDRAULIC OIL AND CLEANING THE SUCTION STRAINER

⚠ WARNING

- **Stop the engine and allow each part of the machine to cool down before performing maintenance.**
  - **The engine, the hydraulic system and many other parts of the machine are hot immediately after the engine is stopped. Touching these parts will cause burns.**
  - **The hydraulic oil is also hot and under high pressure immediately after the engine is stopped. Be careful not to touch the oil when loosening the cap or plug. Working on the machine under these conditions could result in burns or injuries due to the hot oil spurting out.**
- **Oil may spurt out if caps or filters are removed or pipes are disconnected before releasing the pressure in the hydraulic system.**
  - **Press the air breather button to relieve the internal pressure from the tank.**
  - **When removing plugs or screws, or when disconnecting hoses, stand to the side and loosen them slowly to gradually release the internal pressure before removing.**

1. Slew 90° clockwise and set the machine to the hydraulic oil level inspection posture.
   Refer to “Inspecting the hydraulic oil tank level and replenishing” on page 5-26.
2. Open the maintenance cover and the right side cover.

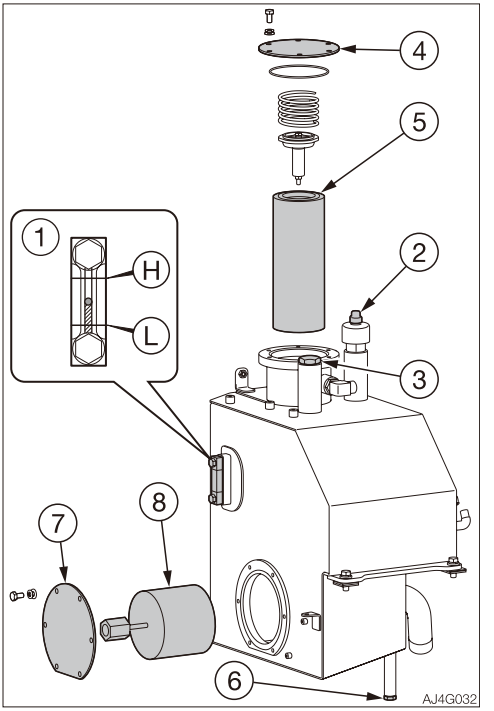

3. Press the button (2) to relieve the internal pressure from the tank.
4. Replace the air breather filter.
   Refer to “Replacing the air breather filter” on page 5-55.
5. Remove the plug (3).
6. Place a pan under the plug (6) to catch the waste oil.
7. Remove the drain plug (6), and then drain the hydraulic oil.
8. Loosen the bolts and remove the flange (4).
9. Remove the return filter (5).
10. Loosen the bolts and remove the flange (7).

11. Remove the suction strainer (8) and clean it.
12. Clean the inside of the hydraulic oil tank.
13. Tighten the drain plug (6).
14. Install the suction strainer (8) on the tank and then install the flange (7).
15. Install the new return filter (5) and the flange (4) on the tank.
16. Add hydraulic oil from the hole of plug (3) up to the level between the upper limit (H) and the lower limit (L) in the sight gauge (1).
17. Tighten the plug (3).
18. Bleed air from the hydraulic oil circuit following “Bleeding air” below.
19. Set the machine to the hydraulic oil level inspection posture and inspect the oil level after the oil cools.
    Refer to “Inspecting the hydraulic oil tank level and replenishing” on page 5-26.

Bleeding air

IMPORTANT: After replacing the hydraulic oil or hydraulic devices, or after performing maintenance of the hydraulic devices, bleed air from the hydraulic circuits and hydraulic devices. Failure to do so may damage the hydraulic devices.

• Hydraulic pump

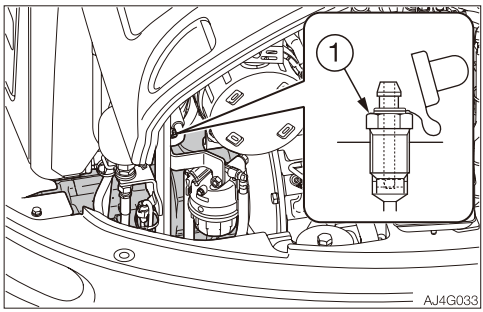

1. Open the engine hood.
2. Loosen the vent plug (1) on the hydraulic pump.
3. Once hydraulic oil overflows from the vent plug hole (1), tighten the vent plug (1).

• Cylinders

1. Start the engine, let it run at a low-idling speed for 10 minutes.
2. Maintain the engine at low idle, and then slowly extend and retract each cylinder 4 or 5 times, without letting them reach the stroke end.
3. While running the engine at high speed, slowly extend and retract each cylinder 4 or 5 times, without letting them reach the stroke end.
4. Return the engine speed to low idle, and then slowly extend and retract each cylinder 4 or 5 times to the stroke end.

- **Emergency shut-off valve (If equipped)**
  This operation is dangerous and requires experience. Ask your sales or service dealer for help.
  If air is not released, the working equipment could become slow in reacting to the operation of the operator and show unexpected behavior.

⚠ WARNING

When removing plugs or screws, or when disconnecting hoses, stand to the side and loosen them slowly to gradually release the internal pressure before removing.

1. Place a pan under the hose (A) or (B) to catch the waste oil.
2. Start the engine and run it at low idle.
3. Fully lower the safety lock lever to the unlock position.

Boom

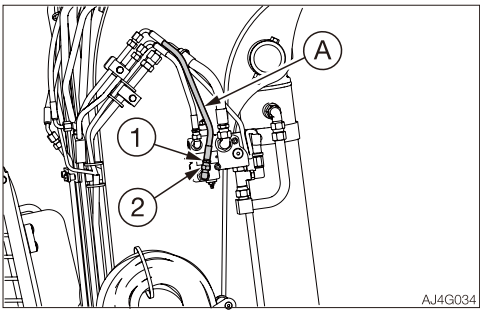

4. Hold the hose fitting (1) in place with a wrench and slowly loosen the hose nut (2).
5. Slowly move the boom in the “Boom lower” direction a little until there are no more air bubbles coming from the hose nut (2) joint.
6. Hold the hose fitting (1) in place with a wrench and tighten the hose nut (2).

Arm

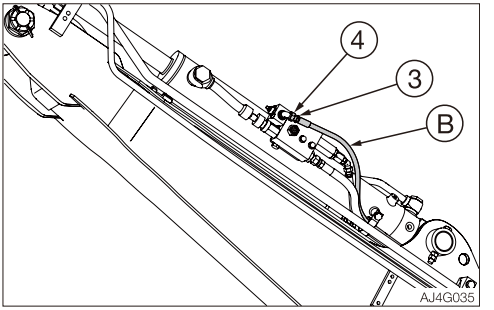

4. Hold the hose fitting (3) in place with a wrench and slowly loosen the hose nut (4).
5. Slowly move the arm in the “Arm lower” direction a little until there are no more air bubbles coming from the hose nut (4) joint.
6. Hold the hose fitting (3) in place with a wrench and tighten the hose nut (4).

EVERY 6000 HOURS

CLEANING THE DPF

If the ash accumulation amount warning lamp starts flashing, clean the DPF even when the running time is less than 6000 hours.
This operation requires experience. Ask your sales or service dealer for it.

- Do not modify the DPF without permission. If modified, it may be damaged or malfunction may occur. As a result, an expensive repair work may be required.
- Do not reuse the DPF that has been dropped to the ground. There is catalyst fitted inside the DPF. It can be damaged if strong shocks are applied to it.

WHEN REQUIRED

REPLACING THE BUCKET TEETH AND THE SIDE CUTTERS

Replace the bucket teeth and the side cutters when the tooth points or the side cutters are worn. Do not wait until the adapter or bucket is damaged.

⚠ WARNING

- **Before performing maintenance or repairs under the machine, lower all moveable working equipment to the ground or in the lowermost position.**
- **To prevent unexpected movement, firmly secure the working equipment when repairing or replacing the bucket teeth or side cutter.**
- **When using a hammer, pins may fly out or metal particles may be scattered. This may lead to serious injury.**
  - **If hard metal parts such as pins, bucket teeth, side cutter or bearings are hit with a hammer, wear protective gear such as safety goggles and gloves.**
  - **When hitting pins or bucket teeth, always check that there is no one in the surrounding area.**
- **Do not allow unauthorized personnel in the work area while working.**

• Bucket tooth <V13SY or V17S>
Removal

1. Clean the bucket and park the machine in a flat, safe place where the ground is hard.

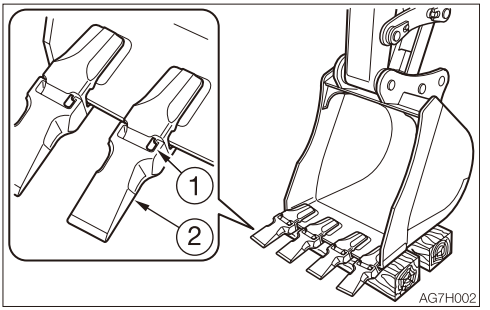

2. Set the bottom surface of the bucket flat and lower it on a block so that the locking pin (1) can be knocked out.
3. Remove the key, then check that the bucket is stable.

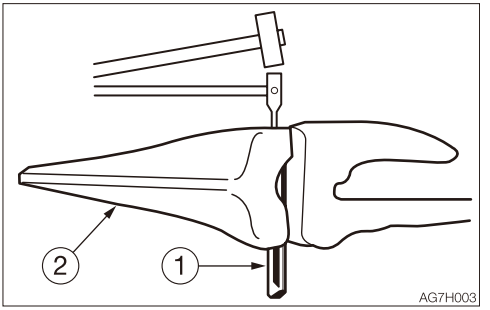

4. Place a rod against the locking pin (1) and knock the locking pin out by hammering against the rod.
   The rod should be round and thinner than the locking pin.

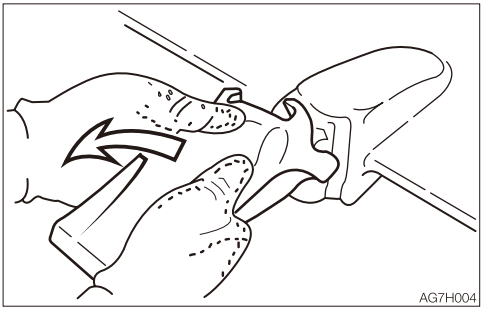

5. Remove the tooth point (2). Some tooth points (2) are of the type that are removed by turning (twisting) them counterclockwise.
   The same procedure can be used to remove the other tooth points.

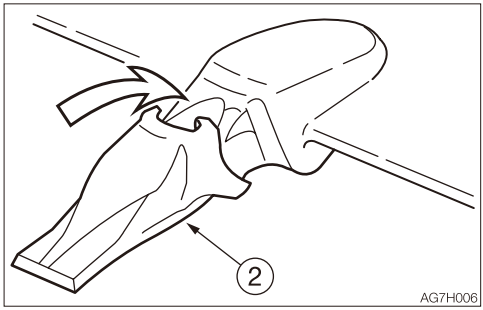

2. Put the tooth point (2) in the adapter nose (3).
   Push in firmly until the tooth point (2) touches the tip of the adapter nose(3).
   Some tooth points (2) are of the type that are installed by turning (twisting) them clockwise.

Installation

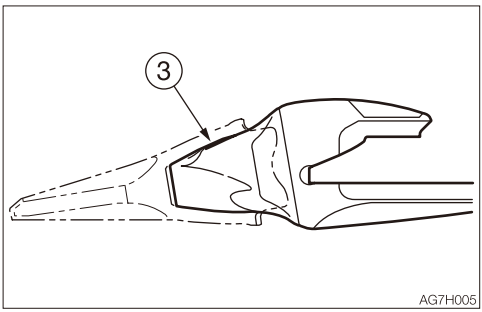

1. Clean the adapter nose (3). If there is gravel or mud on the adapter nose, the tooth point will not go in all the way and the pin cannot be driven in.

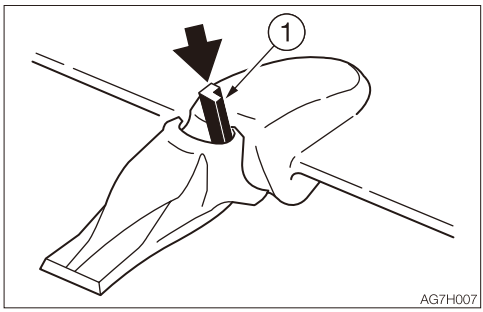

3. Insert the locking pin (1), making sure it is in the right direction.

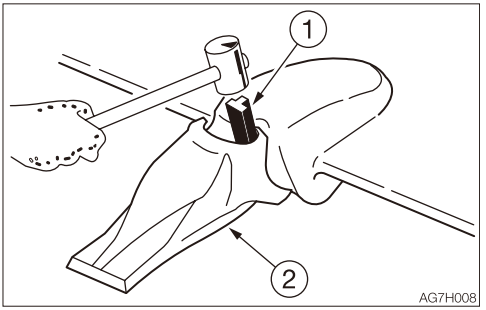

4. Drive in the locking pin (1) with a hammer until it is flush with the tip of the tooth point (2) ear.

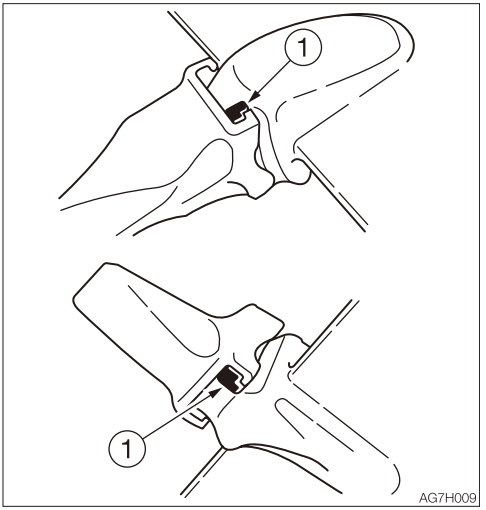

5. The locking pin (1) is now driven in.
   The same procedure can be used to install the other tooth points.

• Side cutter
Installation

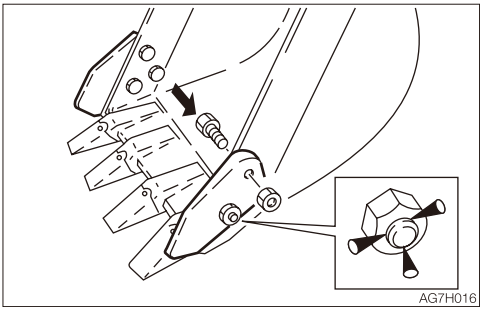

1. Insert the bolts from the inner of the bucket and tighten the side cutterwith nuts.
   Tightening torque: 241 N·m (178 ft-lb)
2. Caulk the bolts with a punch at three spots along the periphery of the screw to prevent the nuts from coming loose.

REPLACING THE BUCKET

⚠ WARNING

- **Before performing maintenance or repairs under the machine, lower all working equipment to the ground or in the lowermost position.**
- **If maintenance must be performed with the engine running, always work as a two person team communicating each other.**
  - **One person must sit in the operator's seat so that he/she can immediately stop the engine when necessary. He/she must take care not to touch the lever or pedal unless necessary.**
  - **The one who performs maintenance must make sure to keep his/her body or clothing away from the moving part of the machine.**
- **When using a hammer, pins may fly out or metal particles may be scattered. This may lead to serious injury.**
  - **If hard metal parts such as pins, bucket teeth, side cutter or bearings are hit with a hammer, wear protective gear such as safety goggles and gloves.**
  - **When hitting pins or bucket teeth, always check that there is no one in the surrounding area.**
- **When aligning the pin holes, always do so by checking them visually. Do not insert your finger in the pin hole, or you could lose your finger.**

Removing

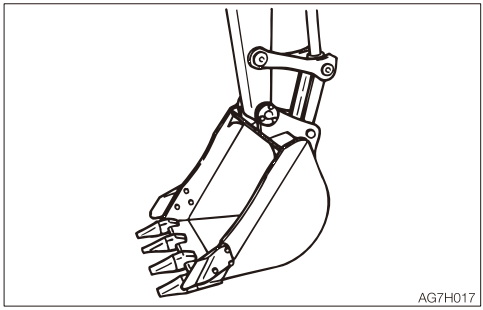

1. Lower the bucket to the ground as shown on the figure above in a stable position.

Note: When removing pins, set the bucket so that it is barely touching the ground. If the bucket is firmly touching the ground, the resistance will be great and it will be difficult to remove the pin.

2. Set the safety lock lever to the locked position and stop the engine.

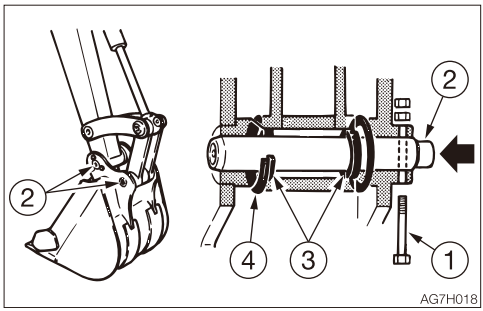

3. Remove the bolt (1).
4. Hammer the pin (2) out of the bucket.
5. Remove the bucket.
   Inspect the pin seal (3) and replace it if it is deformed or damaged. (See next page.)

Installation

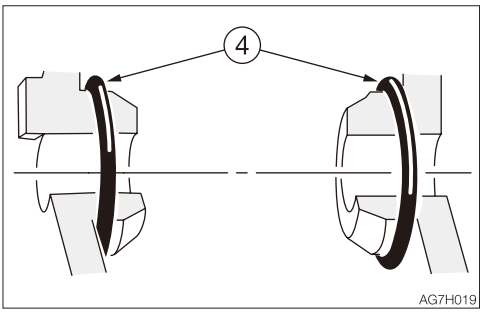

1. Set the O-ring (4) on the bucket as shown on the figure above.

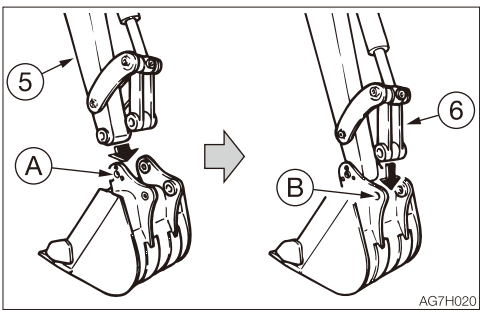

2. Align the pin hole (A) on the bucket with the pin hole on the arm (5), and install the pin (2).
3. Operate the cylinder, align the pin hole (B) on the bucket with the pin hole on the link arm (6), and install the pin (2).

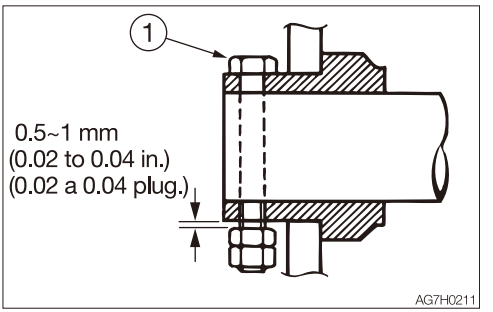

4. Align the turn prevention holes, and then install the bolt (1) and the nut. Be sure to leave a gap of about 0.5 to 1 mm (0.02 to 0.04 in.) between the nut and bucket bush, or the nut will come loose.

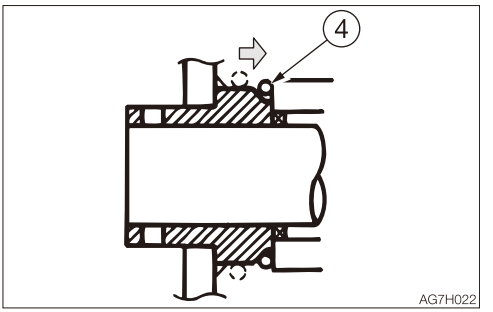

5. Adjust the gap between the bucket and the arm.
   Refer to “Adjusting the gap between the bucket and arm (If equipped)” on page 5-72.
6. Slide the O-ring (4).

Replacing the pin seal

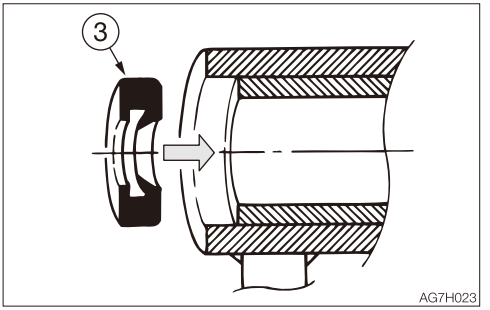

1. Set the pin seal (3) in the direction shown on the figure above.
2. Use a mallet to slowly press the pin seal in. Be careful not to damage the seal.

ADJUSTING THE GAP BETWEEN THE BUCKET AND ARM (IF EQUIPPED)

⚠ WARNING

- **Before performing maintenance or repairs under the machine, lower all working equipment to the ground or in the lowermost position.**
- **To prevent unexpected movement, securely block the working equipment when adjusting the gap.**

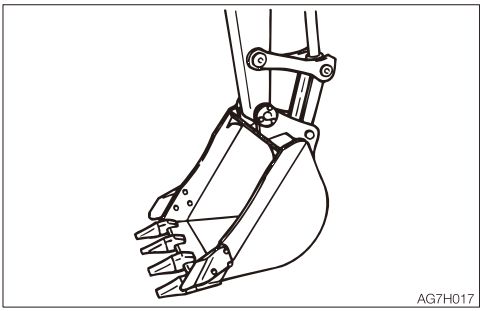

1. Lower the bucket to the ground as shown on the figure above in a stable position.
2. Check that the bucket dose not move, and then set the safety lock lever to the locked position and stop the engine.

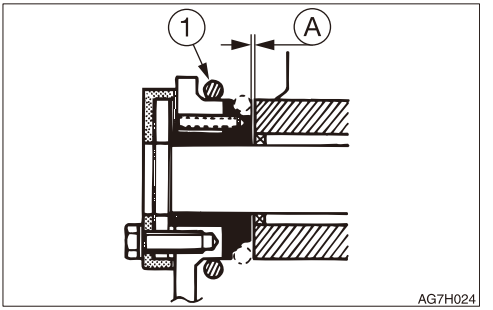

3. Move the O-ring (1) to bring the gap (A) into view and measure the width of the gap (A).
   The gap (A) should be 0.5 mm (0.02 in.). Slew the upperstructure slightly to the left and lightly press the arm point to the left side of the bucket (the side without an adjuster).

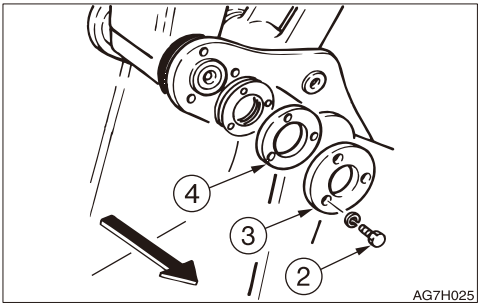

4. Remove the three bolts (2), the end plate (3) and flange (4).

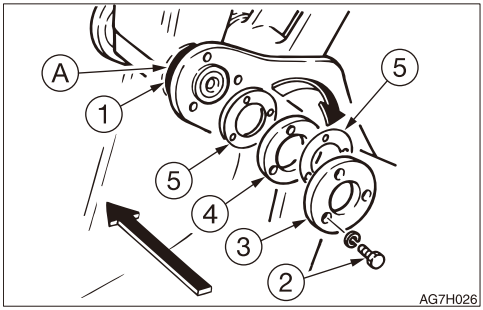

5. Pull out the adjustment shim(s) (5) corresponding to the gap (A) from between the flange (4) and the bucket body.
   Adjustment shim thickness : 0.5 mm (0.02 in.)
   Be careful that the gap is no less than 0.5 mm (0.02 in.) after adjustment.

Note:
Example (for a gap of 2 mm or 0.08 in.):
2 mm - 0.5 mm (standard value) = 1.5 mm (0.06 in.)
In the above example, three shims (5) should be removed.

6. Insert the adjustment shim(s) (5) removed in step 5 above between the end plate (3) and the flange (4), and then fasten it in place with the three bolts (2).
   · Tightening torque for bolts (2): 83 N·m (61.5 ft-lb.)
7. Return the O-ring (1) to the original position.

INSPECTING AND REPLENISHING THE WINDSHIELD WASHER FLUID

⚠ WARNING

Choose ethyl alcohol as washer solution. Do not use methyl alcohol as washer solution. It could damage the eyes.

Use a windshield washer fluid designed specifically for motor vehicles. Follow the instructions included with the washer fluid.

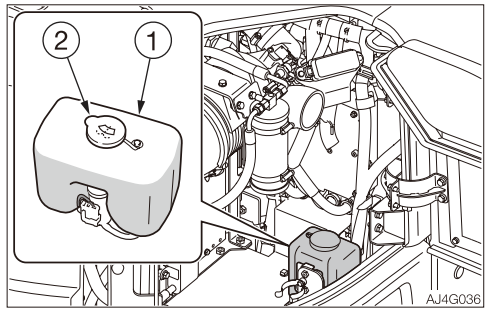

Inspection
1. Open the right side cover.
2. Inspect the washer tank (1) and add washer fluid if the level is low.

Replenishing
1. Mix the washer fluid to the prescribed concentration.
2. Remove the cap (2) and add washer fluid. Keep the dust away while replenishing the washer fluid.
3. Install the cap (2).

DRAINING THE WATER FROM THE WATER SEPARATOR

⚠ WARNING

- **Do not smoke or permit open flames while handling fuel or working on the fuel system.**
- **Stop the engine in a well-ventilated place and allow it to cool down before performing maintenance.**
- **Clean up spilled fuel immediately.**

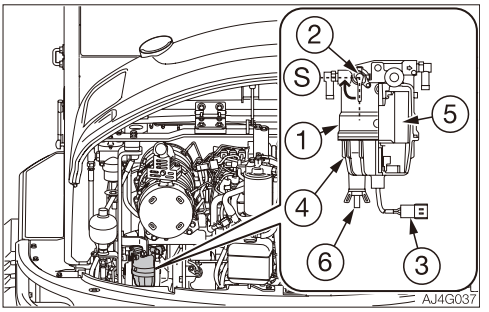

1. Open the engine hood.
2. Place a pan under the drain valve (6) to catch fuel.
3. Open the drain valve (6) and drain the water.
4. Close the drain valve (6).
   Refer to “Bleeding air from the fuel system” on page 6-13.

LUBRICATING THE LEVERS AND PEDALS

⚠ WARNING

Set the machine to the parking posture, stop the engine, remove the starter key and store it. Failure to do so may result in the machine moving abruptly, leading to serious injury or death.

If the levers or pedals no longer move smoothly, grease them.

Operating levers

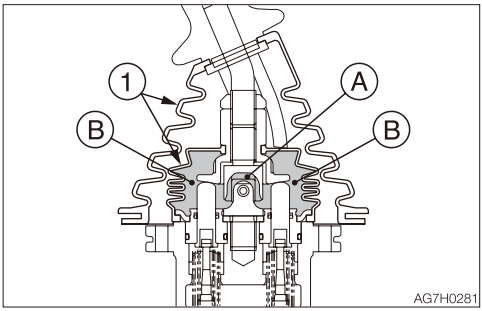

Travel levers/pedals

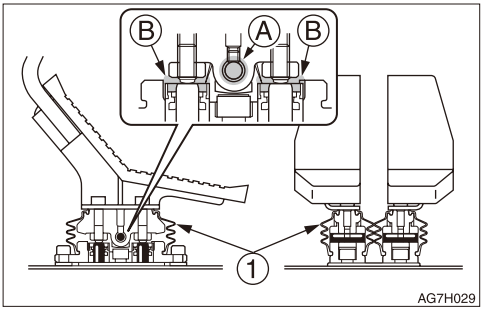

Offset pedal

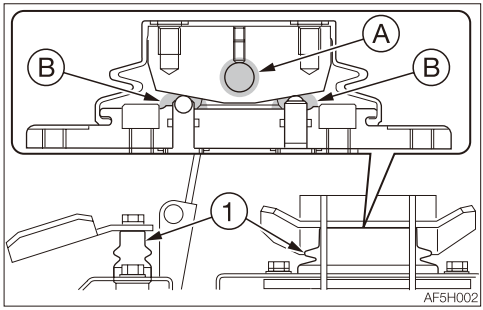

Dozer blade lever

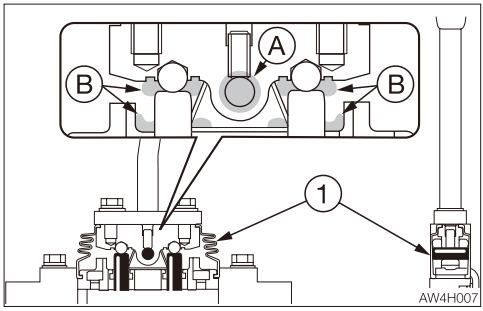

1. Remove the lower mount section of the boot (1) and turn it upward.
2. Wipe off the old grease.
3. Apply grease to points (A) and (B).
4. Set the boot (1) back as it was.

INSPECTING THE RUBBER CRAWLERS

Repair or replace the rubber crawlers if their condition becomes as described below. Consult your sales or service dealer for repair or replacement.

Rubber crawler
Replace the crawler if the entire crawler is stretched and cannot be adjusted.

(1) Lug

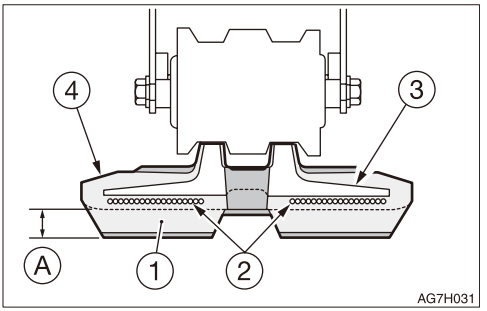

Replace if the height of (A) is 5 mm (0.2 in.) or below.

(2) Steel cord

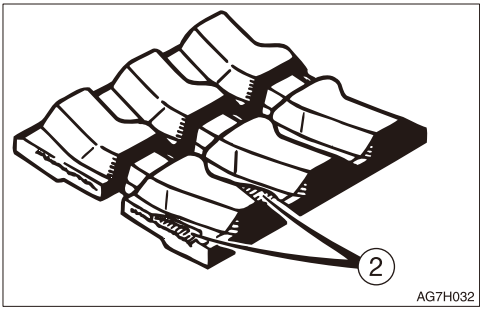

Replace if the steel cord is exposed for two links or more.
Replace if the half or more of the steel cords on one side are cut.

(3) Metal core

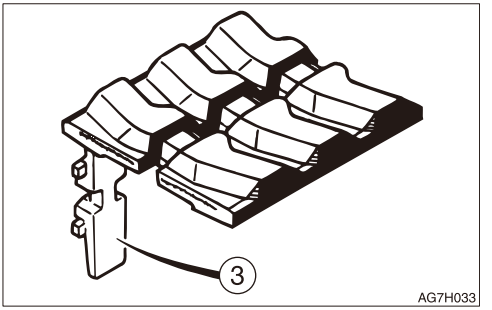

Replace if even one metal core is off.

(4) Rubber

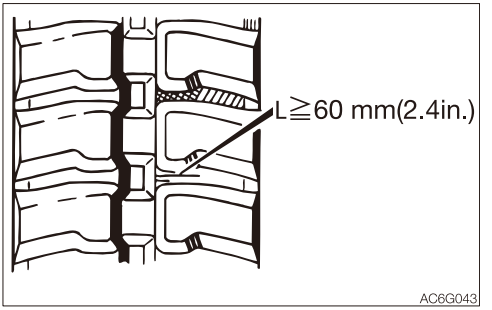

Repair if there are cracks of 60 mm (2.4 in.) or greater in length.
If the steel cord is visible, repair as soon as possible, regardless of the length of the crack.

REPLACING THE RUBBER CRAWLERS

⚠ WARNING

- **If you must work beneath the raised machine or working equipment, always use wood blocks, jack-stands or other rigid and stable supports. Never get under the machine or working equipment if they are not sufficiently supported.**
- **If maintenance must be performed with the engine running, always work as a two person team communicating each other.**
  - **One person must sit in the operator's seat so that he/she can immediately stop the engine when necessary. He/she must take care not to touch the lever or pedal unless necessary.**
  - **The one who performs maintenance must make sure to keep his/her body or clothing away from the moving part of the machine.**

Removal

1. Fully release the tension of the rubber crawler.
   Refer to "Inspecting and adjusting the crawler tension" on page 5-34.

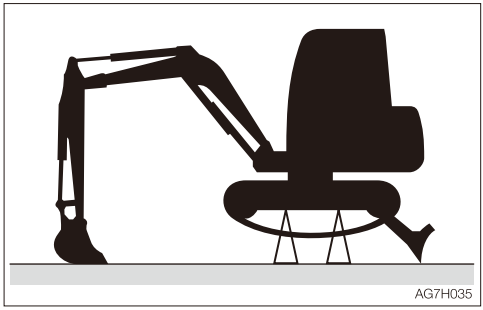

2. Use the working equipment to lift the body.

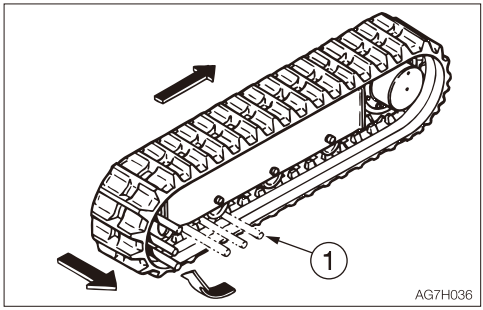

3. Set an iron pipe (1) in the rubber crawler and turn the sprocket slowly in the reverse direction.
4. Turn until the iron pipe (1) is directly next to the idler and the rubber crawler lifts away from the idler, then stop turning the sprocket.
5. Slide the rubber crawler sideways and remove it from the crawler frame.
   Remove the other rubber crawler using the same procedure.

Installation

1. Use the working equipment to lift the body.

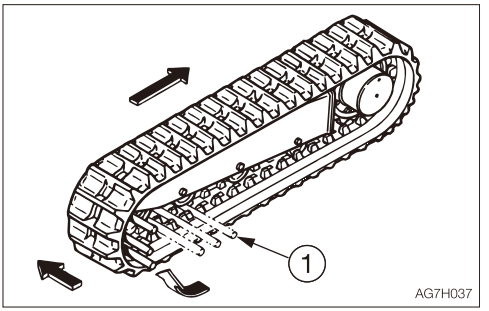

2. Set the rubber crawler on the sprocket.
3. Set an iron pipe (1) in the rubber crawler and turn the sprocket slowly in the reverse direction.
4. Turn until the iron pipe (1) is directly next to the idler and the rubber crawler lifts away from the idler, then stop turning the sprocket.
5. Slide the rubber crawler inward, engage it on the idler, then pull out the iron pipe.
6. Check that the rubber crawler is securely engaged on the sprocket and idler.
7. Tighten the rubber crawler to the standard tension.
   Refer to “Inspecting and adjusting the crawler tension” on page 5-34.
8. Install the other rubber crawler using the same procedure.

MEMO

EVERY YEAR

INSPECTING THE DPF DIFFERENTIAL PRESSURE PIPE AND HOSE

This operation requires experience. Ask your sales or service dealer for it.

INSPECTING THE EGR PIPING

This operation requires experience. Ask your sales or service dealer for it.

INSPECTING THE AIR-INTAKE LINE

This operation requires experience. Ask your sales or service dealer for it.

INSPECTING THE EXHAUST MANIFOLD

This operation requires experience. Ask your sales or service dealer for it.

EVERY 2 YEARS

REPLACING THE RECEIVER DRYER

This operation requires experience. Ask your sales or service dealer for it.

MAINTENANCE DURING EXTENDED STORAGE PERIOD

Storage procedures

If the machine is to be stored for 30 days or more, store it indoors. If it must be stored outdoors, park the machine on a surface laid with lumber on a flat ground, and place a waterproof cover over it so that it stays dry.

1. Clean the machine.
2. Inspect for oil leakage, water leakage, cracks and loose nuts and bolts.
3. Add fuel and replace the hydraulic oil and oil.
4. To prevent rusting and freezing, replace the engine coolant with long-life coolant (LLC).
   Refer to “Cleaning the engine cooling system” on page 5-58.
5. Use the grease gun to lubricate the grease fittings.
6. Fully retract the bucket and arm cylinders and lower the bucket and dozer blade to the ground.
7. Apply rust-inhibiting oil to the hydraulic cylinder rods.
8. Disconnect the negative cable from the battery and cover the battery to prevent freezing.

During storage

⚠ WARNING

- **Do not operate the machine in an enclosed area without adequate ventilation.**
- **If natural ventilation is not possible, install ventilators, fans, exhaust extension pipes or other venting devices.**

1. To prevent rusting, operate the machine once a month so that the oil can be circulated throughout the system.
2. Inspect the battery and recharge it as necessary.
   Ask your sales or service dealer for recharging.

Starting the machine after storage

IMPORTANT: If the above “Storage procedures” have not been followed during the extended storage periods, consult your sales or service dealer before starting the machine again.

1. Wipe off the rust-inhibiting oil that was applied on the piston rods of the hydraulic oil cylinders.
2. Add oil or grease as necessary.

Returning the engine to service

1. Perform the daily checks.
2. The engine should be pre-oiled before startup.
   a. Crank the engine, leaving the fuel system shut off so the engine will not start, for 15 seconds.
   b. Then pause for 30 seconds.
   c. Repeat the procedure until you have cranked the engine for a total of one minute. This will circulate the oil in the engine's lubrication system.
3. Prime the fuel system.
4. Start the engine. Allow the engine to idle for approximately 15 minutes while you check for:
   - Proper oil pressure
   - Fuel, engine oil or coolant leaks
   - Proper operation of the indicators and/or gauges
5. Avoid prolonged operation at minimum or maximum engine speeds and loads for the remainder of the first hour of operation.

TILTING UP THE CAB/CANOPY

For inspection and maintenance, the cab/canopy is designed to be tilted up.

⚠ WARNING

- **Raising or lowering the cab/canopy while the engine is running may cause the machine to move, resulting in serious injury or death. Stop the engine before raising or lowering the cab/canopy.**
- **When the cab/canopy is tilted up, be sure to firmly secure the cab/canopy with the stopper (9) to prevent it from falling.**
  When the stopper is removed to lower the cab/canopy, be careful not to be caught between the cab/canopy and the main body.

IMPORTANT:

- **Before the cab/canopy is tilted up, to avoid the interference between the cab/canopy and the boom, fully offset the boom to the right, fully extend the arm and the bucket cylinders and lower the hoe attachment to the ground.**
- **When raising or lowering the cab/canopy, be sure to raise the filler port (2) upright and secure it in the retraction position so that the filler port (2) does not interfere with the cab.**

Raising (Tilt up)

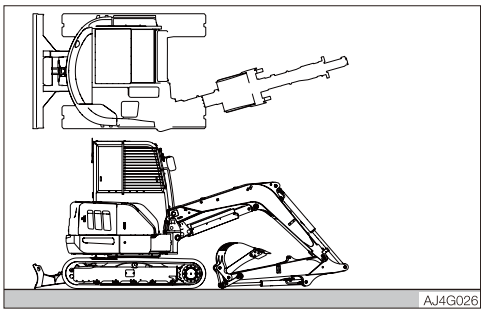

1. Select a firm, level surface, set the machine to the posture shown in the diagram above, ground the working equipment, then stop the engine.
2. Raise the safety lock lever to the lock position, and then close the cab door.

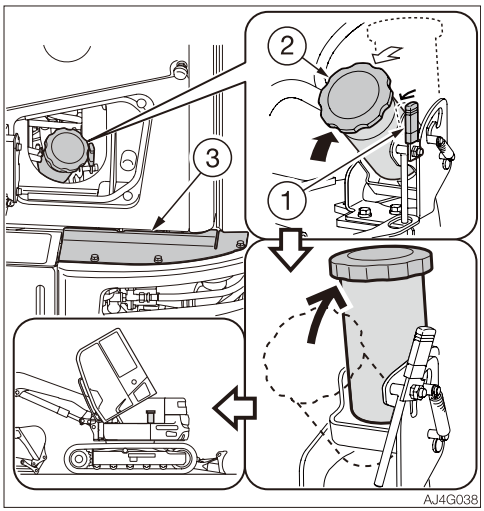

3. Open the fuel lid.
4. Raise the filler port (2) upright to secure it in the retraction position while pulling the lever (1) toward you to release the lock.
   · The cover (3) is locked when the lever (1) is toward you. The cover (3) is released when the filler port (2) is pushed to move the lever (1) away from you (the lever (1) cannot be pushed by hand).

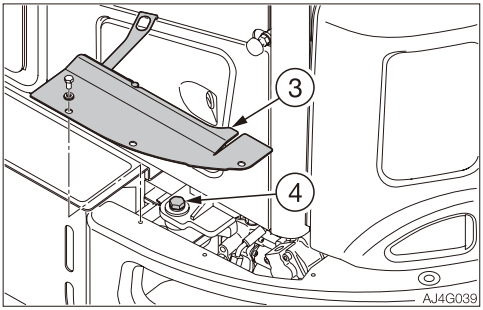

5. Loosen the bolts and remove the cover (3). The cover (3) cannot be removed without raising the filler port (2) upright in the retraction position.

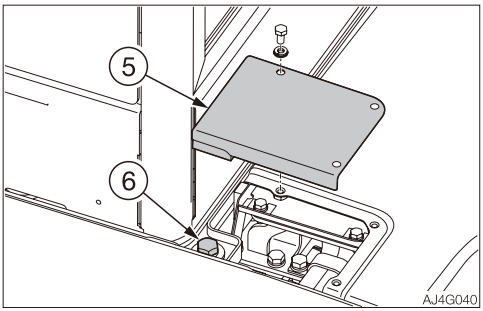

6. Loosen the bolts and remove the cover (5).
7. Remove the lock bolts (4) and (6).

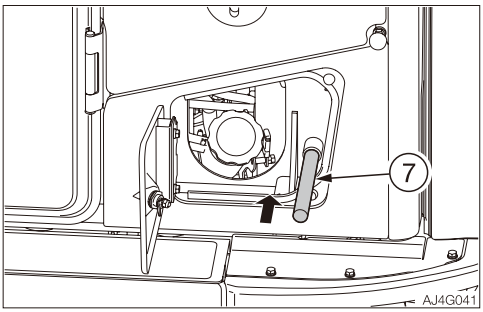

8. Insert the bar (7).

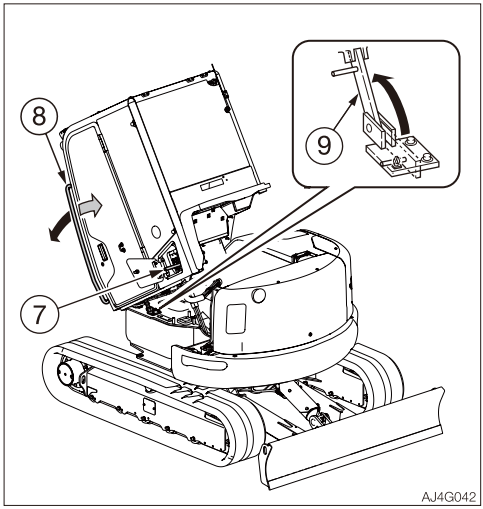

9. Either pull the upper part of the front handrail (8) toward the front of the vehicle or push the bar (7), and then slowly raise the cab/canopy. (Tilt up: approx. 30°)
10. Lift the stopper (9) and insert it into the cab/canopy's holder to secure the cab/canopy.
    If you must run the engine while the cab/canopy is raised, follow the steps below.
11. Make sure that all levers and pedal are in neutral positions.
12. Turn the throttle controller to the low idling position.
13. Start the engine.
14. Be sure to stop the engine after inspection and maintenance.

Lowering

IMPORTANT: Before lowering the cab/canopy, make sure that the filler port (2) is in the retraction position.

1. Remove the stopper (9), and set it back to the original position.
2. Either push the upper part of the front handrail (8) toward the front of the vehicle or pull the bar (7), and then lower the cab/canopy.
3. Pull out the bar (7).
4. Tighten the lock bolts (4) and (6).
   · Tightening torque: 135 N·m (99.6 ft-lb)
5. Install the covers (3) and (5).
6. Fold the filler port (2) toward you to secure it in the fill position.
7. Close the fuel lid and lock it.

TROUBLESHOOTING



SYMPTOMS THAT ARE NOT MALFUNCTIONS

The symptoms listed below are not malfunctions.

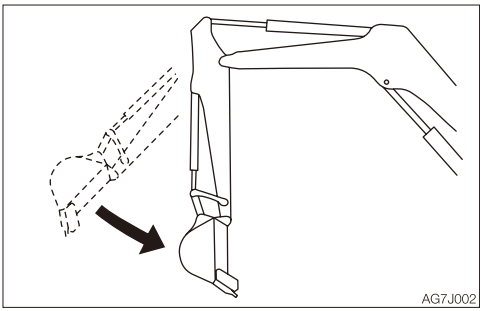

- The arm retracting speed momentarily slows down when it reaches an almost vertical position while the engine is running at low speed.

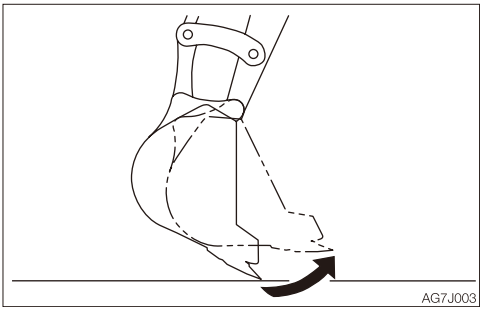

- The bucket teeth moving speed momentarily slows down when it reaches an almost horizontal position while the engine is running at low speed.
- The slew motor produces noise at the beginning and end of the slewing.
- The travel motor produces noise when stopped suddenly from its high speed traveling.
- The control valve produces noise if excessive force is applied to the working equipment or when it moved to the stroke end.
- It becomes less easy to operate the machine when an attachment weighing more than a standard arm or bucket is installed.
- In some cases smoke may be emitted from the tail pipe while the DPF regeneration is being performed. This is not a failure; it is due to burning of the particulate matter (PM).
- In some cases the noise associated with the DPF regeneration operation or cancel operation may change; this is not a failure.

IF THE ENGINE OVERHEATS

⚠ WARNING

- **Do not open the engine hood when steam is coming from it. The steam or hot water may spurt out and cause burns.**
- **Do not try to remove the radiator cap or the drain plug when the cooling water is hot. Stop the engine, wait until the engine and the radiator cool, and then slowly loosen the radiator cap to release the internal pressure.**
- **Before performing maintenance, stop the engine and allow the machine to cool down.**

The symptoms listed below indicate overheating.

< Canopy >

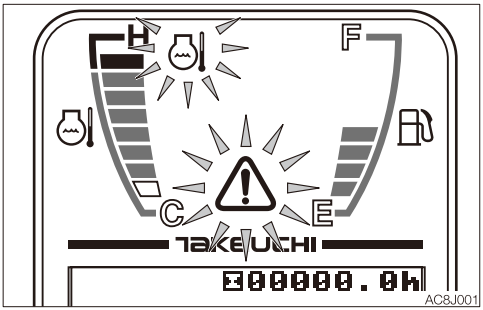

< Cab >

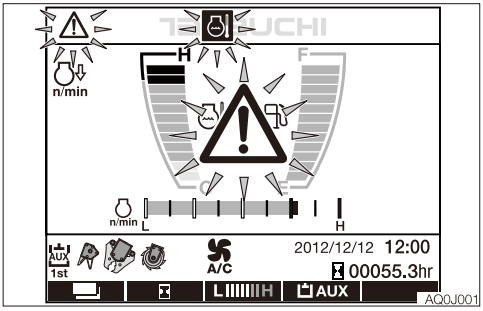

- An alarm is sounded and the engine emergency lamp and the coolant temperature warning lamp start flashing.
- The water temperature gauge level is in the red zone.
- Steam comes from the engine room.

Remedy procedure

1. Park the machine in a safe place.
2. Check if steam is coming out of the closed engine hood.
3. If there is steam, stop the engine immediately and contact your sales or service dealer for repair. If steam, is not coming out run the engine at low idle and let the water temperature cool down.
4. When the water temperature gauge level drops in the green zone, stop the engine.
5. Perform the inspections and the remedies listed below once the engine cools down.
   - Fan belt slack..... Adjust
     Refer to page 5-30.
   - Coolant level ..... Add
     Refer to page 5-22.
   - Water leakage ..... Repair
   - Radiator fins..... Clean
     Refer to page 5-45.
   - Sediment in cooling system
     ..... Clean
     Refer to page 5-58.

If the problem persists after the above remedies, contact your sales or service dealer for repair.

IF THE BATTERY GOES DEAD

The symptoms below indicate that the battery is dead.
- The starter motor does not turn or fails to start the engine.
- The horn is too weak.

Remedy procedure
Start the engine using the booster battery on the other vehicle (booster vehicle) and the jumper cables.

⚠ WARNING

- **When starting the engine using the jumper cables, be sure to connect the cables by following the proper steps. Improper use of jumper cables can result in battery explosion or unexpected machine motion.**
  - **Do not allow the booster vehicle and the machine with a dead battery (dead machine) to touch each other.**
  - **Do not allow the positive (+) and the negative (–) clips of the jumper cables to touch each other.**
  - **When connecting, attach the jumper cable to the positive (+) terminals first. When disconnecting, remove the cable from the negative (–) terminal (ground) first.**
  - **Connect the last clip of the jumper cable to a point as far away from the battery as possible.**
- **Always wear the protective goggle when jump starting the engine by using the jumper cables.**
- **Set the battery charging current to at or below one tenth of the rated capacity. Too high charging current could cause the battery to leak or be depleted, resulting in explosion if ignited.**

IMPORTANT:
- **Use the jumper cables and clips of a size suited to the capacity of battery. Do not use damaged or corroded jumper cables and clips.**
- **Be sure that the battery of the booster vehicle has the same capacity as the battery of the dead machine.**
- **Be sure to connect the clips securely.**

Connecting the jumper cables

IMPORTANT: Set the starter keys of the booster vehicle and the dead machine to the OFF position.

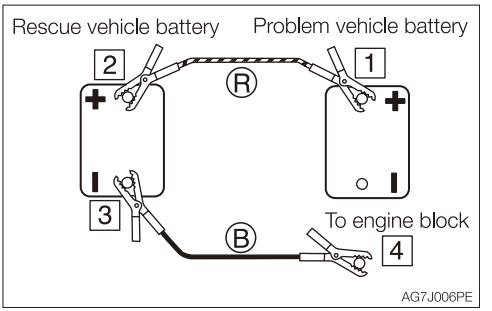

1. Connect the clip of jumper cable (R) to the positive (+) battery terminal of the dead machine.
2. Connect the other clip of jumper cable (R) to the positive (+) battery terminal of the booster vehicle.
3. Connect the clip of jumper cable (B) to the negative (–) battery terminal of the booster vehicle.
4. Connect the other clip of jumper cable (B) to the engine block of the dead machine. Connect the clip to a place as far from the battery as possible.

Starting the engine

1. Check that the clips are securely connected to the terminals.
2. Start the engine of the booster vehicle and run it at high speed.
3. Start the engine of the dead machine.

Disconnecting the jumper cables

Once the dead machine is successfully running, remove the jumper cables by following the same steps as for connection in the reverse order.

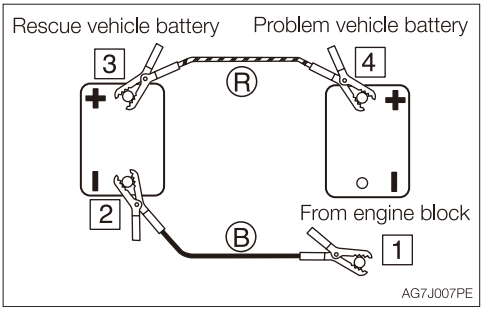

1. Disconnect the clip of jumper cable (B) from the engine block of the dead machine.
2. Disconnect the other clip of jumper cable (B) from the negative (–) battery terminal of the booster vehicle.
3. Disconnect the clip of jumper cable (R) from the positive (+) battery terminal of the booster vehicle.
4. Disconnect the clip of jumper cable (R) from the positive (+) battery terminal of the dead machine.

Recharging

Ask your sales or service dealer for recharging the dead battery.

MEMO

IF A FUSE BLOWS

If a light does not come on or the electrical system does not work, a fuse may be blown. Inspect the fuses.

INSPECTING AND REPLACING THE FUSE

⚠ WARNING

If the fuse blows again soon after replacement, then the electric system is likely faulty. It may pose a fire hazard if not properly repaired. Contact your sales or service dealer for advice.

1. Turn the starter key to the OFF position to stop the engine.

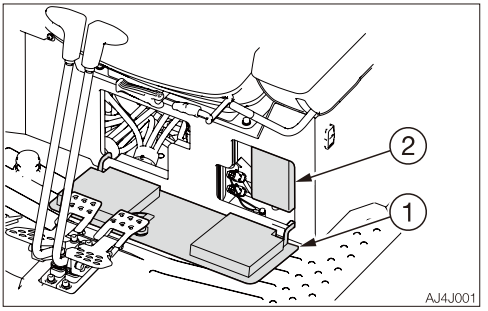

2. Open the cover (1).
3. Open the fuse box cover (2).
4. Check for any blown fuses.

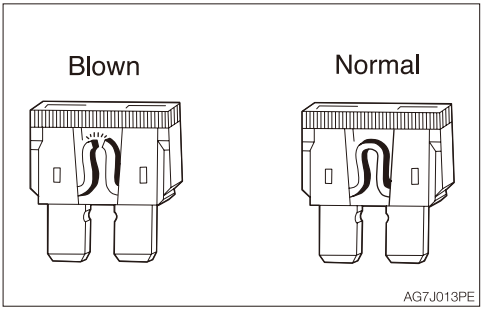

5. If a fuse is blown, replace it with a spare fuse of the same capacity.

Fuse layout and circuits protected (1)

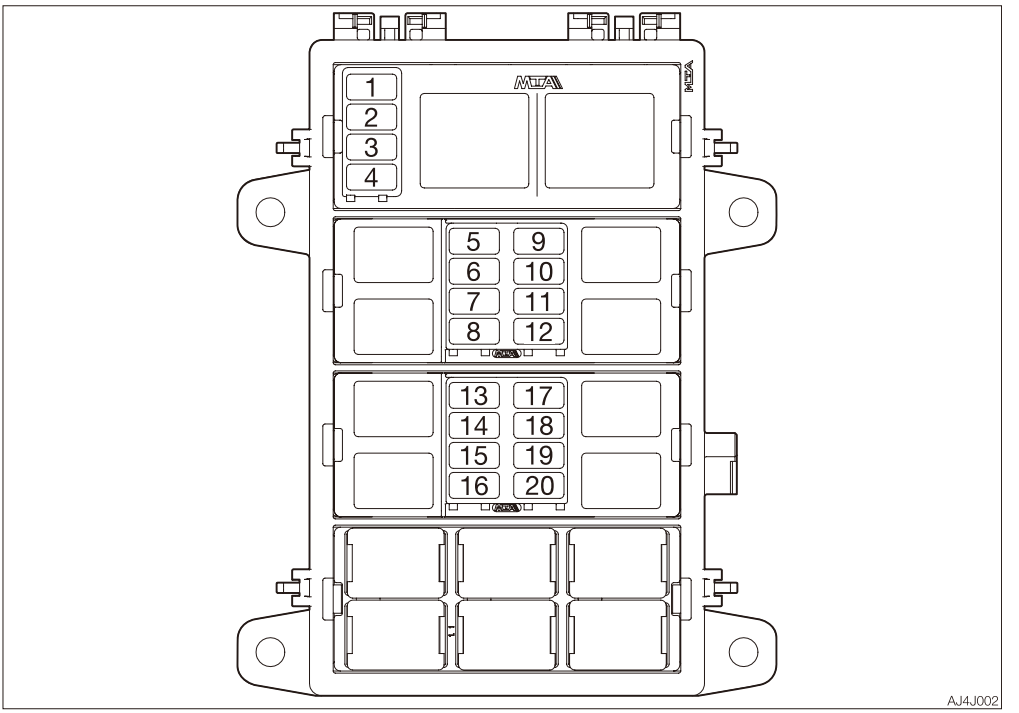

No.	Capacity	Symbol	Protected circuit	Fuse No.
1	3A		GPS (B)	F4D
2	25A		Fuel supply pump	F3D
3	10A		Starter switch	F2D
4	10A		Horn	F1D
5	25A	CAB	Cab light	F4A
6	15A	OPT (1)	Option (1)	F3A
7	10A 15A*		Wiper	F2A
8	15A		Light	F1A
9	10A		Immobilizer	F8A
10	10A	CAB	Cab interior power supply	F7A
11	15A		Safety lock lever	F6A
12	25A	MAIN CTL	Main controller	F5A
13	25A		Blow-by heater	F4B
14	15A	OPT (2)	Option (2)	F3B
15	10A		Air conditioner compressor	F2B
16	25A		Air conditioner	F1B
17	10A	MAIN CTL	Main controller	F8B
18	3A		GPS (ACC)	F7B
19	10A	G	Alternator	F6B
20	5A		Switch lighting	F5B

* : For machines equipped with rear wiper

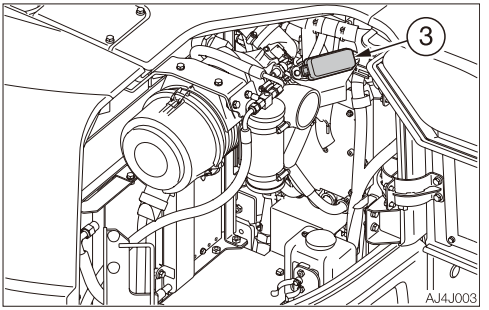

6. Open the right side cover.
7. Open the fuse box cover (3).
8. If a fuse is blown, replace it with a spare fuse of the same capacity.

Fuse layout and circuits protected (2)

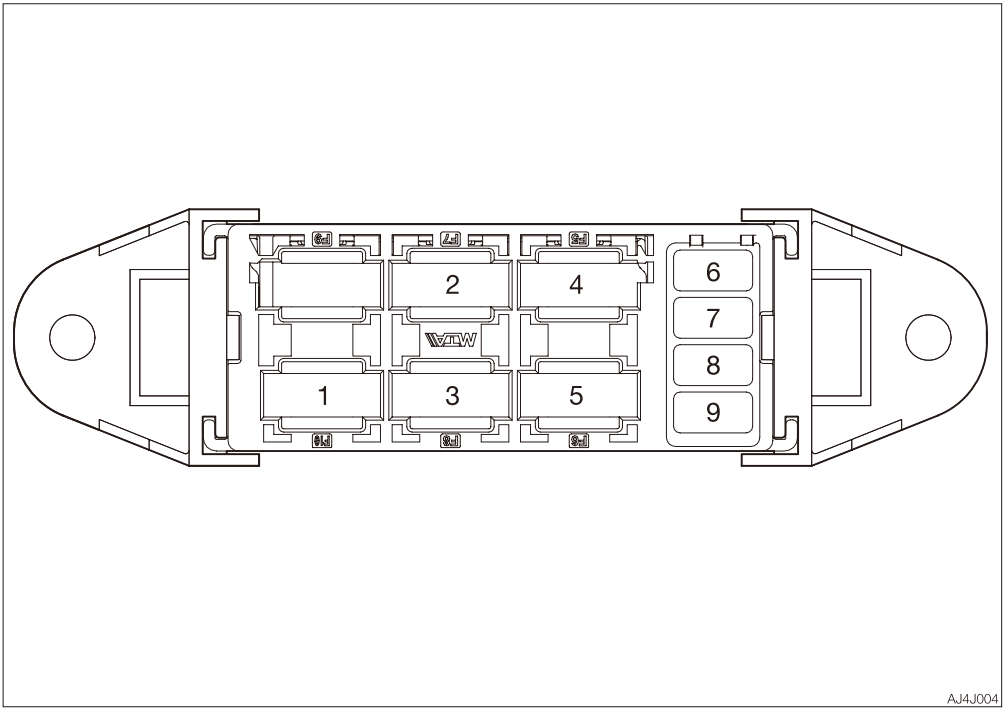

No.	Capacity	Symbol	Protected circuit	Fuse No.
1	50A	S.B.F.5	Slow blow fuse (5)	
2	40A	S.B.F.4	Slow blow fuse (4)	
3	40A	S.B.F.3	Slow blow fuse (3)	
4	40A	S.B.F.2	Slow blow fuse (2)	
5	40A	S.B.F.1	Slow blow fuse (1)	
6	5A		Air flow sensor	F4C
7	5A	EGR	EGR	F3C
8	5A	MAIN CTL	Main relay	F2C
9	25A	ECU	ECU	F1C

INSPECTING THE SLOW BLOW FUSE

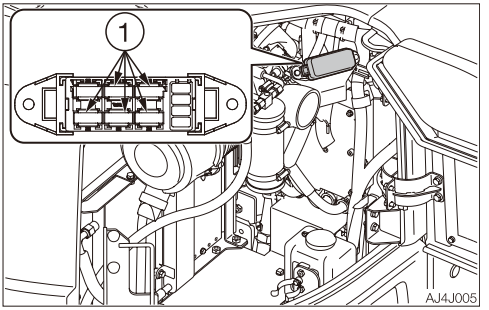

If the machine is not turned on after turning the starter switch to the ON position, the cartridge type slow blow fuse (1) is likely blown. Open the right side cover and inspect it. If the slow blow fuse is blown, contact your sales or service dealer.

Note: Slow blow fuses are large type fuses used in high current applications. Like a regular fuse, they act as fuses by protecting the electric components and wirings from damage caused by excessive current draw.

RESTARTING AFTER ADDING FUEL

BLEEDING AIR FROM THE FUEL SYSTEM

IMPORTANT:

- **NEVER use the starter motor to crank the engine in order to prime the fuel system. This may cause the starter motor to overheat and damage the coils, pinion gear and/or ring gear.**
- **If the engine stalls due to fuel shortage, add fuel, turn the key to the ON position for 60 seconds, and then turn it to the START position. Running the starter for a long time before there is enough fuel is going through can cause the starter to fail.**

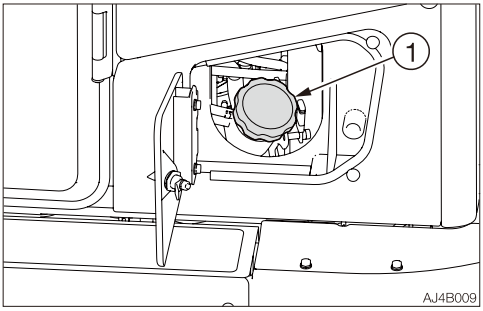

1. Add fuel.

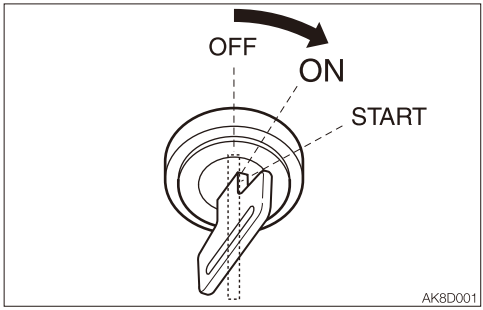

2. Turn the starter key to the ON position and hold it for about 60 seconds.
   The automatic air bleeder bleeds air from the fuel system.

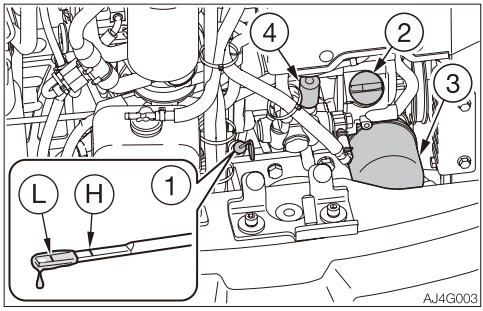

3. Check that the pre-supply pump (4) is located near the engine oil filler cap (2).
4. Push the pre-supply pump (4) by hand until the pump becomes hard.
5. Close the engine hood.
6. Start the engine and check for fuel leakage.

Note: Air in the fuel system causes the engine to fail to start or to have other problems. Always bleed air when the fuel tank is emptied or when there is air in the fuel system.

IF A WARNING LAMP FLASHES

If an alarm is sounded or a warning lamp starts flashing during operation, park the machine in a safe place and perform the remedy procedures described below.

Warning lamp	Lamp name	Causes and remedies
 AW4J007	**Vehicle and engine emergency lamp**	There is a problem in the machine. Refer to the respective warning lamp below. Get the vehicle or engine error code number from the multi-information display or the instrument cluster, and then consult your sales or service dealer referring to the “Vehicle error code list” or “Engine error code list”. Refer to “Multi-information display” on page 2-17 or “Instrument cluster” on page 2-37. Refer to “Vehicle error code list” on pages 6-18 and 6-19. Refer to “Engine error code list” on pages 6-20 to 6-24.
 AW4J0041	**ECM error warning lamp**	An engine problem is detected. If an error code is displayed on the multi-information display or the instrument cluster, inform your sales or service dealer of the code and ask for help. Refer to “Multi-information display” on page 2-17 or “Instrument cluster” on page 2-37. Refer to “Engine error code list” on pages 6-20 to 6-24.
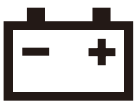 AG7J019	**Battery charge warning lamp**	There is a problem with the fan belt or charger. Check the fan belt for slack or breakage and adjust as necessary. If the lamp continues flashing after maintenance, there is likely a problem with the charger. Consult your sales or service dealer for help. Refer to “Inspecting and adjusting the fan belt” on page 5-30.

Warning lamp	Lamp name	Causes and remedies
 AG7J017	**Engine oil pressure warning lamp**	There is a problem in the engine lubrication system. Check the engine oil level. If the lamp is flashing when the level is normal or even after replenishment of oil or coolant, consult your sales or service dealer. Refer to “Inspecting and replenishing the engine oil” on page 5-23.
 AW4J009	**Water separator warning lamp**	Water is in the water separator. Drain water. Refer to “Draining the water from the water separator” on page 5-74.
 AG7J018	**Coolant temperature warning lamp**	The coolant temperature is too high and the engine is overheating. Refer to “If the engine overheats” on page 6-3.
 AG7J020	**Air cleaner warning lamp**	The air cleaner is clogged. Clean it. Refer to “Cleaning the air cleaner” on page 5-43.
 AK8J004	**NCD warning lamp** **NCD: NOx Control Diagnostic system**	A problem is detected in the exhaust system. Get the engine error code number from the multi-information display or the instrument cluster and consult your sales or service dealer referring to the “Engine error code list”. Refer to “Multi-information display” on page 2-17 or “Instrument cluster” on page 2-37. Refer to “Engine error code list” on pages 6-20 to 6-24.

Warning lamp	Lamp name	Causes and remedies
 AR1J002	**Ash accumulation amount warning lamp**	This lamp flashes if the DPF needs cleaning; the alarm is sounded when the engine is started. Clean the DPF (maintenance every 6000 hours). If the machine continues operating for 200 hours more without maintenance, the engine output will be reduced by 50%. Refer to “Cleaning the DPF” on page 5-65.
 AW4J010	**Fuel level warning lamp**	The fuel level is too low. Add fuel. Refer to “Inspecting the fuel level” on page 5-25.
 AQ0J004	**Third auxiliary hydraulic warning lamp**	Pressure in the third auxiliary hydraulic line is too low Consult your sales or service dealer for help.
 AR0J003	**Blow-by heater warning lamp**	Blow-by heater is not operating. Contact a Takeuchi service dealer for advice.

MEMO

VEHICLE ERROR CODE LIST

If an error code appears on the display, consult your sales or service dealer.

Error code	Error details
9	Impossible to sense ACC key
402	CAN 0 communication error
502	CAN communication error (EECU)
602	CAN communication error (cluster gauge)
822	CAN communication error (TAKEUCHI Security System)
1703	Main power supply voltage error (too high)
1704	Main power supply voltage error (too low)
2503	Sensor voltage error (too high) MMC
2504	Sensor voltage error (too low) MMC
3300	Alternator charge faulty
3360	DPF over-trapping (Lv2)
3370	DPF over-trapping (Lv1)
3380	Ash accumulation amount
3401	Engine oil pressure error
3500	Overheat
3600	Air cleaner clogged
3700	Water separator alarm
3843	CCV heater 1 (IN) voltage error (too high)
3844	CCV heater 1 (IN) voltage error (too low)
3853	CCV heater 2 (OUT) voltage error (too high)
3854	CCV heater 2 (OUT) voltage error (too low)
5303	Accelerator sensor error (too high)
5304	Accelerator sensor error (too low)
5503	Fuel sender 1 voltage error (too high)
5504	Fuel sender 1 voltage error (too low)
5603	Lift alarm sensor error (too high)
5604	Lift alarm sensor error (too low)
5613	Boom angle sensor error (voltage high)
5614	Boom angle sensor error (voltage low)

Error code	Error details
5623	Offset arm angle sensor error (voltage high)
5624	Offset arm angle sensor error (voltage low)
6503	AUX1 slide switch voltage value error (too high)
6504	AUX1 slide switch voltage value error (too low)
6509	AUX1 slide switch neutral error
6519	AUX1 (L) switch error
6529	AUX1 (R) switch error
6603	AUX2 slide switch voltage value error (too high)
6604	AUX2 slide switch voltage value error (too low)
6609	AUX2 slide switch neutral error
6709	AUX3 switch error (Foot)
6719	AUX3 switch error (Grip)
8005	Pump PWM output voltage error (too low)
8006	Pump PWM output voltage error (too high)
8015	AUX1 (L) PWM output voltage error (too low)
8016	AUX1 (L) PWM output voltage error (too high)
8025	AUX1 (R) PWM output voltage error (too low)
8026	AUX1 (R) PWM output voltage error (too high)
8035	AUX2 (L) PWM output voltage error (too low)
8036	AUX2 (L) PWM output voltage error (too high)
8045	AUX2 (R) PWM output voltage error (too low)
8046	AUX2 (R) PWM output voltage error (too high)
8755	Offset PWM output electric current error (too low)
8756	Offset PWM output electric current error (too high)
9005	Boom raise PWM output electric current error (too low)
9006	Boom raise PWM output electric current error (too high)
9900	Options settings change (TFM)

PWM = Pulse width modulation

ENGINE ERROR CODE LIST

If an error code appears on the display, consult your sales or service dealer.

Error code		Error details	DTC
SPN	FMI		
29	3	Accelerator position sensor 2: High	P2128
	4	Accelerator position sensor 2: Low	P2127
91	2	Accelerator position sensor correlation error	P2135
	3	Accelerator position sensor 1: High	P2123
	4	Accelerator position sensor 1: Low	P2122
100	1	Oil pressure error	P0524
102	3	Boost pressure sensor: High	P0238
	4	Boost pressure sensor: Low	P0237
108	3	Barometric pressure sensor error (High side)	P2229
	4	Barometric pressure sensor error (Low side)	P2228
110	0	Engine overheat	P0217
	3	Coolant temperature sensor: High	P0118
	4	Coolant temperature sensor: Low	P0117
132	1	Intake air volume: Low	P0101
	3	MAF sensor: High	P0103
	4	MAF sensor: Low	P0102
	15	Boost pressure low	P3011

Error code		Error details	DTC
SPN	FMI		
157	0	High rail pressure	P0088
	3	Rail pressure sensor: High	P0193
	4	Rail pressure sensor: Low	P0192
168	3	Battery voltage: High	P0563
	4	Battery voltage: Low	P0562
171	3	Intake air temp. built-in MAF sensor: High	P0073
	4	Intake air temp. built-in MAF sensor: Low	P0072
172	0	Intake air temp: High Intercooler model only	P0111
	3	Intake air temp. error: High	P0113
	4	Intake air temp. error: Low	P0112
174	0	Fuel high temp.	P0181
	4	Fuel temperature sensor: Low	P0182
	3	Fuel temperature sensor: High	P0183
190	0	Engine overrun	P0219
628	2	ECU FLASH ROM error	P0605
633	7	Pressure limiter emergency open	P0087
636	2	NE sensor (Crank position sensor) pulse number error	P0336
	7	NE-G phase shift NE: Crankshaft position sensor G: Camshaft position sensor	P0016
	8	No input of NE sensor (Crank position sensor) pulse	P0335

Error code		Error details	DTC
SPN	FMI		
651	3	Open circuit of harness or coil in 1st cylinder injector	P0201
652	3	Open circuit of harness or coil in 2nd cylinder injector	P0204
653	3	Open circuit of harness or coil in 3rd cylinder injector	P0202
654	3	Open circuit of harness or coil in 4th cylinder injector	P0203
723	2	G-sensor (Camshaft position sensor) pulse number error	P0341
	8	No input of G sensor (Camshaft position sensor) pulse	P0340
1077	2	ECU CPU (Main IC) error	P0606
1239	1	Fuel leak (in high pressured fuel system)	P0093
1347	3	+B short circuit of SCV (MPROP)	P0629
	4	SCV (MPROP) drive system error	P0628
	7	SCV(MPROP) stuck	P0089
1485	2	Main relay is locked in closed position	P0687
3242	0	Emergency exhaust gas temperature sensor 1: High	P3003
	3	Exhaust gas temperature sensor 1: High	P0544
	4	Exhaust gas temperature sensor 1: Low	P0543
3246	0	Emergency exhaust gas temperature sensor 2: High	P3004
	3	Exhaust gas temperature sensor 2: High	P242D
	4	Exhaust gas temperature sensor 2: Low	P242C
3251	3	Differential pressure sensor 1: High	P2455
	4	Differential pressure sensor 1: Low	P2454
3252	0	Emission deterioration	P3001

Error code		Error details	DTC
SPN	FMI		
3509	3	Sensor supply voltage 1: High	P0643
	4	Sensor supply voltage 1: Low	P0642
3510	3	Sensor supply voltage 2: High	P0653
	4	Sensor supply voltage 2: Low	P0652
3701	0	Excessive PM5	P3008
	15	Excessive PM3	P3006
	16	Excessive PM4	P3007
3936	2	Removal of DPF system (PCD)	P3015
	7	Loss of Function of DPF system (PCD)	P1A28
4765	0	Emergency exhaust gas temperature sensor 0: High	P3002
	3	Exhaust gas temperature sensor 0: High	P0547
	4	Exhaust gas temperature sensor 0: Low	P0546
523523	2	Injector drive circuit open in No.1 & 4 cylinder simultaneously	P2146
	3	No. 1 & 4 cylinder injector short to +B at power supply side, or all cylinder injector short to +B	P2148
	4	No. 1 & 4 cylinder injector short to ground at power supply side, or all cylinder injector short to ground	P2147
523524	2	Injector drive circuit open in No.2 & 3 cylinder simultaneously	P2149
	3	No. 2 & 3cylinder injector short to +B at power supply side, or all cylinder injector short to +B	P2151
	4	No. 2 & 3cylinder injector short to ground at power supply side, or all cylinder injector short to ground	P2150

Error code		Error details	DTC
SPN	FMI		
523525	1	Injector charge voltage: Low	P0611
523527	2	ECU CPU (Monitoring IC) error	P0606
523535	0	Injector charge voltage: High	P0200
523538	2	QR (IQA) data error	P0602
	7	No QR (IQA) data	P0602
523539	2	Pump seizing 1	P1274
523540	2	Pump seizing 2	P1275
523543	2	Accelerator position sensor error (CAN)	P2131
523544	3	+B short of air heater relay driving circuit	P0380
	4	Ground short of glow relay driving circuit	P0380
523547	2	CAN2 Bus off	U0075
523548	2	CAN-KBT Frame error	U0081
523572	4	EGR position sensor failure	P0409
523574	3	EGR actuator open circuit	P0403
	4	EGR actuator coil short	P0404
523575	7	EGR actuator valve stuck	P2413
523576	2	EGR (DC motor) overheat	P2414
523577	2	EGR (DC motor) temp. sensor failure	P2415
523578	2	No communication with EGR	U0076

Error code		Error details	DTC
SPN	FMI		
523580	2	Intake throttle feedback error	P2108
523582	3	Intake throttle lift sensor: High	P2622
	4	Intake throttle lift sensor: Low	P2621
523589	17	Low coolant temp. in parked regeneration	P3012
523590	16	Parked regeneration time out	P3013
523591	2	CAN CCVS (Parking SW and Vehicle speed) frame error	U0082
523592	2	CAN CM1 (Regen SW) frame error	U0083
523593	2	CAN DDC1 (Transmission) frame error	U0084
523594	2	CAN ETC2 (Neutral SW) frame error	U0085
523595	2	CAN ETC5 (Neutral SW) frame error	U0086
523596	2	CAN TSC1 frame error	U0087
523598	2	CAN EBC1 frame error	U0089
523599	0	All exhaust temp. sensor failure	P3018
523600	0	Initial pump-calibration incomplete	P3019
523601	0	High exhaust gas temp. after emergency high temp. DTC	P3023
523602	0	High frequency of regeneration	P3024
523603	15	Over heat pre-caution	P3025
523604	2	CAN1 Bus off	U0077
523700	13	EEPROM check sum error	P1990

OTHER SYMPTOMS

For symptoms not included in the table below or if the problem persists after the proper remedies have been taken, consult your sales or service dealer.

Symptoms	Major causes	Remedies
Left and right operating levers do not move smoothly	• Insufficient grease on the left and right operating levers	• Grease the levers. Refer to page 5-75.
Travel levers, blade lever and pedals do not move smoothly	• Insufficient grease on travel levers, blade lever and pedals	• Grease the levers and pedals. Refer to page 5-75.
Operation of hoe attachment, dozer blade, auxiliary hydraulics, slewing or traveling is not possible.	• Safety lock lever is raised (locked)	• Lower (release) the safety lock lever. Refer to page 2-75.
	• Fuse is blown	• Replace the fuse. Refer to page 6-7.
Digging force is insufficient	• Hydraulic oil level too low	• Add to the specified level. Refer to page 5-26.
	• Hydraulic oil is not warm enough	• Perform the warm-up. Refer to pages 3-10 to 3-11.
	• Air cleaner is clogged	• Clean the air cleaner. Refer to page 5-43.
	• Hydraulic oil is not of suitable type	• Replace the hydraulic oil. Refer to page 5-62.
Traveling is not possible or not smooth	• Stones or foreign objects are stuck	• Remove the foreign object.
Machine veers to the right/left	• Stones or foreign objects are stuck	• Remove the foreign object.
	• Crawler belt tension is faulty.	• Check and adjust (ask your sales or service dealer). Refer to pages 5-34 to 5-35.

Symptoms	Major causes	Remedies
Travel speed cannot be changed	• Fuse is blown	• Replace the fuse. Refer to page 6-7.
Slewing is not possible or not smooth	• Insufficient grease on slew bearing	• Grease the bearing. Refer to page 5-36.
Hydraulic oil temperature is too high	• Hydraulic oil level too low	• Add up to the specified level. Refer to page 5-26.
Starter motor turns but engine does not start	• Insufficient fuel	• Add fuel. Refer to page 5-25.
	• Air in fuel system	• Bleed air. Refer to page 6-13.
	• Water in fuel system	• Drain water. Refer to page 5-37.
	• Fuel is frozen.	• Warm the fuel pipe with hot water or wait until the ambient temperature becomes high.
	• Engine control system is faulty.	• Adjust or repair (ask your sales or service dealer).
	• Fuel line is faulty.	• Adjust or repair (ask your sales or service dealer).
	• Preheating device is faulty.	• Adjust or repair (ask your sales or service dealer).
Crawlers come off	• Crawlers too loose	• Check and adjust (ask your sales or service dealer). Refer to pages 5-34 to 5-35.

Symptoms	Major causes	Remedies
Engine exhaust is white or bluish	• Excessive engine oil	• Adjust to the specified level. Refer to page 5-23.
	• Insufficient engine warm-up.	• Perform the warm-up operation. Refer to page 3-7.
	• Engine control system is faulty.	• Adjust or repair (ask your sales or service dealer).
	• Fuel line is faulty.	• Adjust or repair (ask your sales or service dealer).
	• Prolonged idling (approx. two hours or more)	• Increase the engine RPM and check for smoke.
	• Poor fuel	• Replace the fuel.
Engine exhaust is occasionally black	• Air cleaner is clogged	• Clean the air cleaner. Refer to page 5-43.
	• Engine control system is faulty.	• Adjust or repair (ask your sales or service dealer).
	• Fuel line is faulty.	• Adjust or repair (ask your sales or service dealer).
	• Clogging in the exhaust line.	• Adjust or repair (ask your sales or service dealer).
	• DPF is faulty.	• Adjust or repair (ask your sales or service dealer).

Symptoms	Major causes	Remedies
Irregular noise is produced from the engine (combustion or mechanical noise)	• Low quality fuel is being used	• Replace the fuel.
	• Engine is overheating	• Refer to “If the engine overheats” on page 6-3.
	• Damage inside the muffler	• Replace the muffler. For replacement, ask your sales or service dealer.

LOWERING THE BOOM TO THE GROUND

If the hoe attachment must be lowered to the ground while the engine is stopped, use the following procedure.

Perform this operation within 10 minutes after the engine stopping.

1. Sit at the operator's seat.
2. Turn the starter switch to the ON position.
3. Lower the safety lock lever to the unlock position
4. Slowly push the operating lever forward to lower the boom.

MEMO

TOWING

⚠ WARNING

When towing, serious injury or death could result, if performed incorrectly or the wire rope being used is inappropriate or not properly inspected.

- **It becomes dangerous if the wire rope breaks or becomes disengaged. Use a wire rope appropriate for the required tractive force.**
- **Do not use a wire rope that is kinked, twisted or otherwise damaged.**
- **Do not apply heavy loads abruptly to the wire rope.**
- **Wear safety gloves when handling the wire rope.**
- **Make sure there is an operator on the machine being towed as well as on the machine that is towing.**
- **Never tow on slopes.**
- **Do not let anyone come near to the wire rope while towing.**

IMPORTANT:

- **Do not tow a machine if its engine does not start or if the machine does not run. Doing so could damage the machine being towed.**
- **When recovering the machine gets stuck in the mud, lift the machine, or contact a Takeuchi sales or service dealer.**
- **Be sure to follow the steps below closely when using the towing hole to tow. Failure to heed even one of the steps may cause damage to the towing hole or other parts of the frame.**

Towing the machine (if engine can be started and travel motor runs normally)

Use the procedure described below to tow heavy objects or the machine itself if it should get stuck in the mud and not be able to get out on its own.

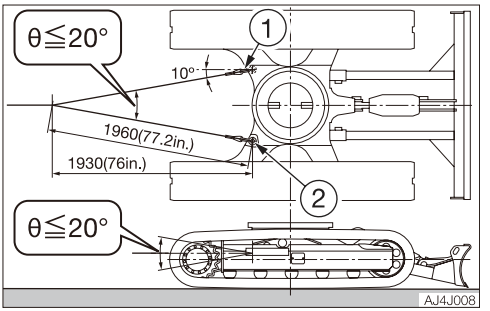

- Permissible forces: 88.9 kN (19985 lbf)
  Do not tow using only a towing hole on one side.

1. Attach the wire rope to the shackle (1).
2. Fasten the shackle (1) to the towing holes (2).
3. Make sure that the wire rope is at a cone angle of 20° or less to the travel frame.
4. Move the machine to tension the wire rope.
5. Move the machine at a low speed of 2 km/h (1.24 mph) or less to a place (convenient location for repair) a short distance from the site.

IF THE CAB OR CANOPY IS DAMAGED

⚠ WARNING

Immediately replace the damaged cab or canopy. Serious injury or death may occur if the machine is operated with damaged cab/canopy.
Do not operate the machine until the replacement is complete. Do not try to repair the damaged cab or canopy by welding. Doing so could endanger the safety of the cab/canopy.

Canopy part number: 03984-00007
Cab part number: 03986-00116

EXHAUST GAS CONTROL SYSTEM ERROR

ERROR CODE LIST

If the exhaust gas control system detects an error, the ECM error warning lamp turns on or flashes and the following error codes are displayed.
If an error code appears, immediately repair the fault part detected, or consult your sales or service dealer for help.

Error code		Error description		DTC	NCD or PCD Error*	Limited engine (Inducement)
SPN	FMI	Fault location	Cause			
3936	7	DPF system	Removal of the DPF system	P1A28	P	
	2	DPF system	Loss of function of the DPF system	P3015	P	
3251	3	DPF system	Failures of the PCD system	P2455	P	
523578	2	EGR system	Removal of the EGR system	U0076	N	√
132	4	MAF system	Removal of the MAF sensor	P0102	N	√

*:
N: NCD (NOx Control Diagnostic system)
P: PCD (Particulate Control Diagnostic system)

NOX CONTROL DIAGNOSTIC SYSTEM (NCD)

The NCD system warns the operator of any error detected by turning on the warning lamp and displaying an engine error code. The engine output is limited depending on the type of fault.

PARTICULATE CONTROL DIAGNOSTIC SYSTEM (PCD)

The PCD system warns the operator of any error detected in the particulate after-treatment system such as the DPF, by using the warning lamp and displaying an engine error code.

LIMITING THE ENGINE OUTPUT

If the exhaust gas control system detects an error, the engine output is limited depending on the type of fault.
Note: If the time interval between the fault repairing and error detecting is short, the regular operation may be executed with a shorter pre operation.

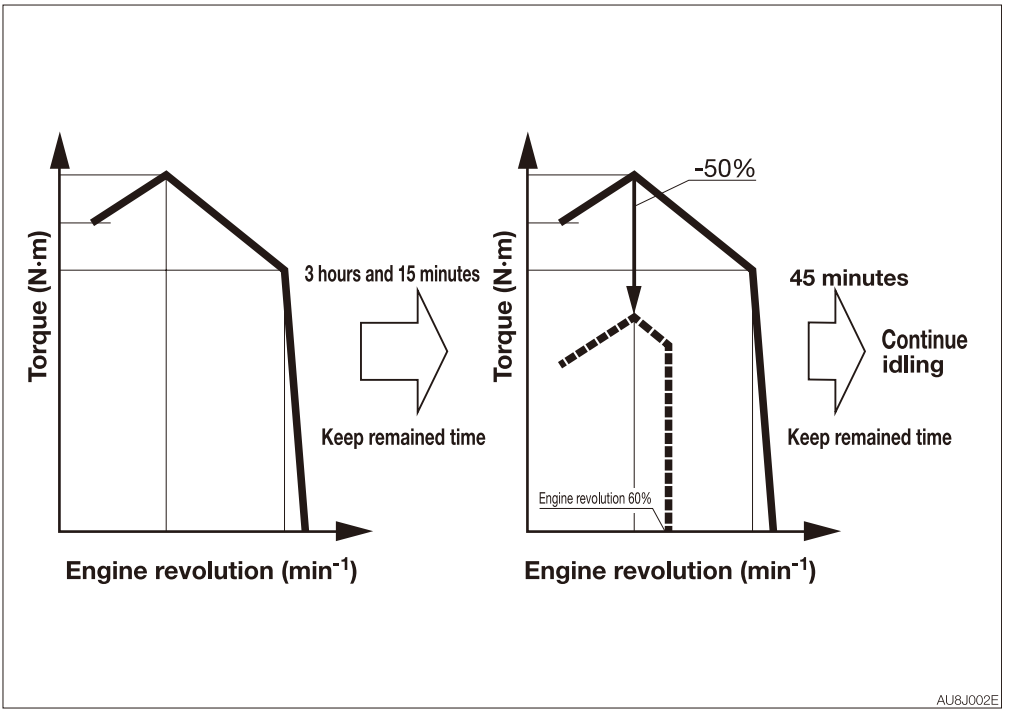

: Normal
: Limited output

Pre operation 1: If an error is detected, the warning lamp turns on or starts flashing; the engine output is not limited.
Pre operation 2: Pre operation 2 starts after pre operation 1 continues 3 hours and 15 minutes. The engine torque is reduced by 50%, compared to the normal operation.
Regular operation: Regular operation starts after the pre operation 2 continues 45 minutes. The engine enters the idling state. The regular operation continues until the error is resolved.

SPECIFICATIONS



BASIC SPECIFICATIONS

Type				Canopy	Cab
MASS					
Operating mass	kg (lb)	Rubber crawlers	Standard arm	5725 (12620)	5840 (12875)
			Long arm	5750 (12675)	5865 (12930)
		Steel crawlers	Standard arm	5905 (13020)	6020 (13270)
			Long arm	5930 (13075)	6045 (13325)
PERFORMANCE					
Bucket capacity (Standard bucket)	m^3 (cu. ft.)	Heaped		0.141 (4.98)	
		Struck		0.102 (3.6)	
Slew speed	min^{-1} (rpm)			9.6 (9.6)	
Travel speed	km/h (mph)	Rubber crawlers	1st	2.6 (1.6)	
			2nd	4.8 (3.0)	
		Steel crawlers	1st	2.4 (1.5)	
			2nd	4.5 (2.8)	
Gradeability	(degrees)			30	
Ground pressure	kPa (psi)	Rubber crawlers	Standard arm	32.5 (4.71)	33.1 (4.8)
			Long arm	32.6 (4.73)	33.3 (4.83)
		Steel crawlers	Standard arm	33.6 (4.87)	34.3 (4.97)
			Long arm	33.8 (4.9)	34.4 (4.99)
ENGINE					
Manufacturer and model				KUBOTA V2403-CR-TE5B	
Rated output	Net (ISO 14396)		kW/min^{-1} (hp/rpm)	39.0/2200 (52.3/2200)	
	Net (ISO 9249/ SAE J1349)		kW/min^{-1} (hp/rpm)	37.2/2200 (49.9/2200)	
Displacement			ml (cu.in.)	2434 (148.5)	
Amount of CO_2 emission*			g/kWh	807.2	
Starter			V-kW	12-2	
Alternator			V-kW	12-1.08	
Battery (IEC 60095-1)			V-A·h	12-90	
CCA			A	710	

*: The amount of CO_2 emission refers to the value obtained by testing the parent engine representing the engine type (engine family member) being used; it shall not guarantee the performance of the machine.

Unit:dB (A)

NOISE EMISSION		
DECLARED SINGLE-NUMBER NOISE EMISSION VALUES in accordance with ISO 4871*		
Sound power level (2000/14/EC)	Guaranteed sound power level	98
Emission sound pressure level at the operator's position**	Emission sound pressure level	80
Measured values and Uncertainties		
Sound power level (2000/14/EC)	Measured sound power level	97
	uncertainty	1
Emission sound pressure level at the operator's position**	Measured emission sound pressure level	78
	uncertainty	2

* : Declared single-number noise emission values are the sum of measured values and the associated uncertainty.
** : Values determined according to noise test code given in ISO 6396.

MACHINE DIMENSIONS

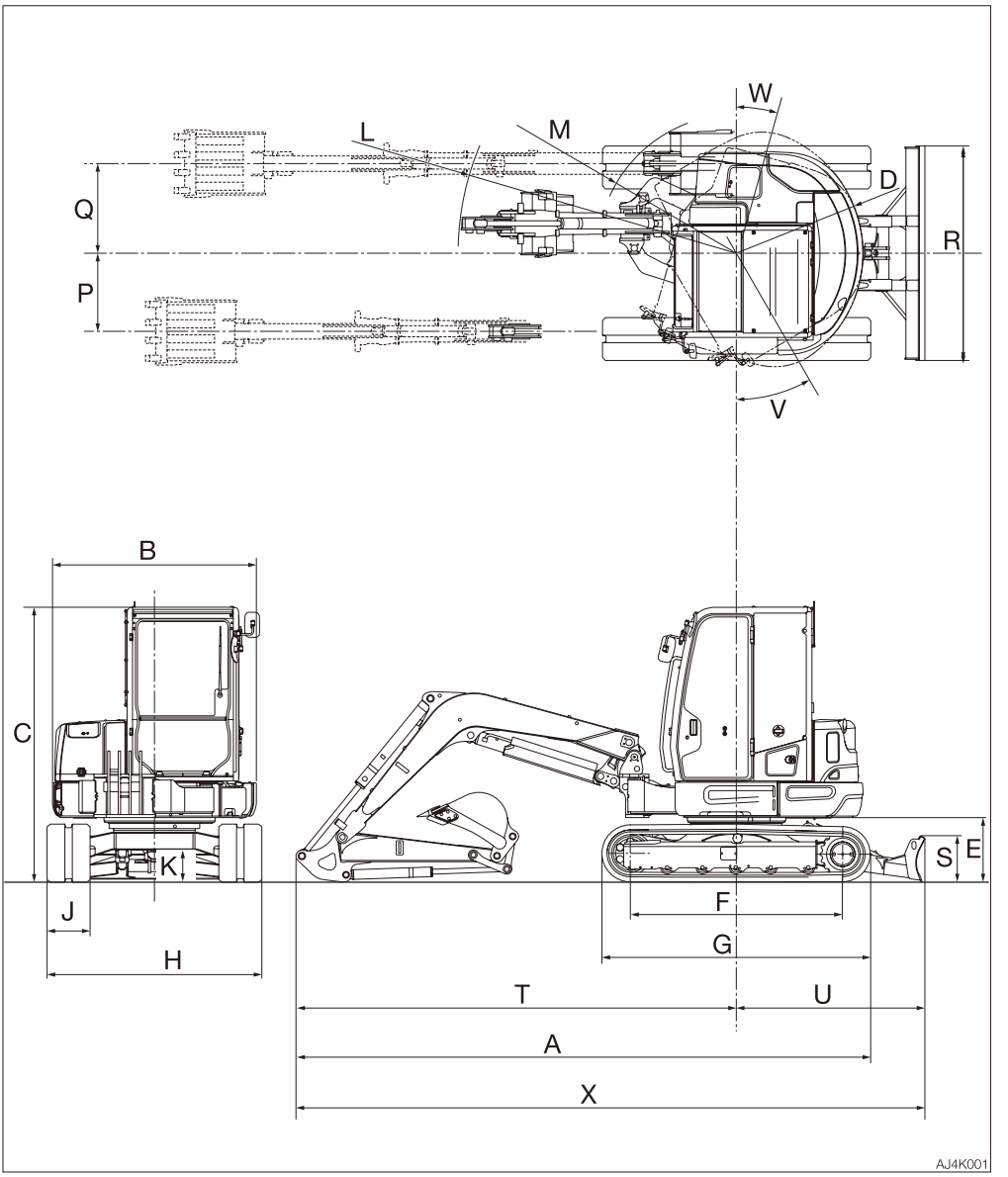

Unit: mm (inch)

	Item	Standard arm		Long arm	
		Rubber crawlers	Steel crawlers	Rubber crawlers	Steel crawlers
A	Overall length	5350 (210.6)	5345 (210.4)	5395 (212.4)	5380 (211.8)
B	Upperstructure overall width	1900 (74.8)	←	←	←
C	Overall height	2575 (101.4)	2580 (101.6)	2575 (101.4)	2580 (101.6)
D	Slew radius	1180 (46.5)	←	←	←
E	Clearance height under upperstructure	605 (23.8)	595 (23.4)	605 (23.8)	595 (23.4)
F	Crawler base	1980 (78)	1970 (77.6)	1980 (78)	1970 (77.6)
G	Crawler overall length	2500 (98.4)	←	←	←
H	Crawler overall width	2000 (78.7)	←	←	←
J	Crawler shoe width	400 (15.7)	←	←	←
K	Ground clearance of undercarriage	300 (11.8)	295 (11.6)	300 (11.8)	295 (11.6)
L	Minimum radius of equipment and attachment	2590 (102)	←	2580 (101.5)	←
M	Minimum radius of equipment at maximum front offset	1290 (50.7)	←	1435 (56.5)	←
P	Offset distance of bucket (offset left)	730 (28.7)	←	←	←
Q	Offset distance of bucket (offset right)	835 (32.9)	←	←	←
R	Dozer blade width	2000 (78.7)	←	←	←
S	Dozer blade height	430 (17)	←	←	←
T	Front distance to axis of rotation	4105 (161.6)	←	4145 (163.2)	←
U	Dozer blade distance to axis of rotation	1720 (67.7)	←	←	←
V	Upperstructre slew angle when offset (offset left)	30°	←	←	←
W	Upperstructre slew angle when offset (offset right)	16°	←	←	←
X	Overall length (dozer blade at rear)	5860 (230.7)	←	5905 (232.5)	5895 (232.1)

OPERATING RANGES

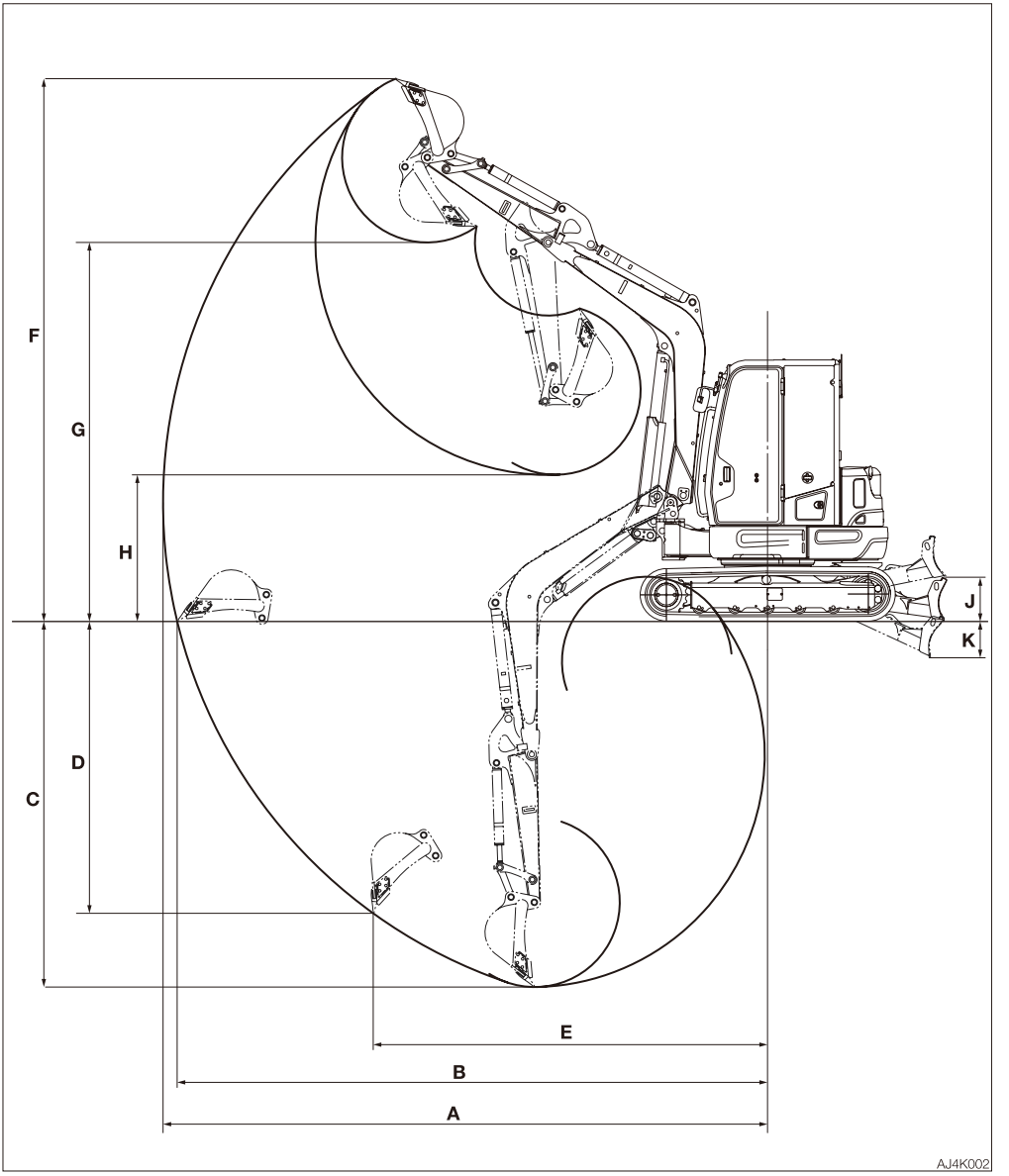

Unit: mm (inch)

	Item	Standard arm		Long arm	
		Rubber crawlers	Steel crawlers	Rubber crawlers	Steel crawlers
A	Maximum reach	5925 (233.2)	←	6215 (244.6)	←
B	Maximum reach at ground reference plane	5785 (227.8)	←	6080 (239.4)	6085 (239.6)
C	Maximum digging depth	3585 (141.2)	3595 (141.5)	3895 (153.4)	3905 (153.7)
D	Maximum vertical digging depth	2865(112.7)	2870 (113)	3160(124.5)	3170(124.8)
E	Reach at maximum vertical digging depth	3865 (152.2)	←	3945 (155.3)	←
F	Maximum height of cutting edge	5325 (209.6)	5315(209.3)	5495 (216.4)	5490(216.1)
G	Maximum dumping height	3720 (146.4)	3710(146.1)	3890 (153.2)	3885(152.9)
H	Minimum dumping height	1440 (56.6)	1430(56.3)	1130 (44.4)	1120(44.1)
J	Dozer blade maximum lifting	435 (17.1)	←	←	←
K	Dozer blade maximum lowering	355 (14.0)	←	←	←

LIFTING CAPACITIES

When an excavator is used to lift loads in Europe, it must comply with EN 474-1: 2022.
Install the following devices, and then turn on the overload warning switch before starting the lifting operation:
- Lifting device
- Lifting safety device

The lifting safety device must include the emergency shut-off valves on the boom and on the arm.
If the blade is used as an outrigger when lifting loads, the blade cylinder must be equipped with an emergency shut-off valve. Refer to “Lifting safety device (If equipped)” on page 2-119.

Rated lift capacity chart

- The loads in the charts do not exceed 87% of hydraulic lift capacity or 75% of tipping load.
- Figures marked with an asterisk (*, ※) are hydraulically-limited capacities.
- The bucket mass is excluded.
- The mass of slings and any other lifting devices shall be deducted from the rated load to determine the net load that may be lifted.
- The load point is the bucket hinge pin.
- The bucket cylinder is fully extended.
- Unit: kg (lbs)

Lifting device (If equipped)

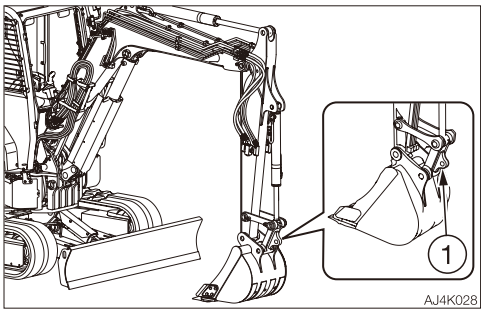

IMPORTANT:When a lifting operation is performed using a machine in Europe, you must use a machine equipped with a lifting device that complies with EN 474-1: 2022. Use a Takeuchi genuine lifting device (1).
If your machine is not equipped with our genuine lifting device (1), you must install an attachment that has a lifting device complying with EN 474-1: 2022.
When such an attachment is required, contact a Takeuchi sales or service dealer for advice.

When lifting loads, install the sling on the lifting device (1).

Load hooking system

A load hooking system must be provided with the following capabilities.
1. A system which can withstand two-and-a-half times the rated lift capacity no matter at what position the load is applied.
2. A system that poses no risk of the lifted load falling from the hooking device. For example, equipped with a hook slippage prevention device.
3. A system that poses no risk of the hooking system slipping from the hoe attachment.

Inspection before lifting loads

Before lifting loads, inspect the following items to ensure there is no abnormality:

- Inspect for any damage to the attachment, hose or lifting device.
- Confirm that the overload warning device operates.
  Turn on the overload warning switch, and then fully raise the boom. If the horn is sounded, the overload warning device is normal.

⚠ WARNING

- **Do not attempt to lift or hold any load that is greater than these rated values at their specified load radii and height.**
- **The rated lift capacities are based on the machine being level and situated on a firm supporting surface. For safe lifting, the operator is expected to make due allowance for the particular job conditions such as soft or uneven ground, non-level condition, load to the machine sides, hazardous conditions, experience of personnel, etc. The operator and other personnel should fully acquaint themselves with the operator's manual furnished by the manufacturer before operating this machine. When operating the machine, the safety rules of the equipment must also be followed.**
- **Do not travel while lifting a load; It is very dangerous.**
- **Do not lift load when the boom is offset to the right or left. Doing so could cause the machine to tip over.**

<Cab> Long arm

Units: kg(lbs.)

Over Front ; Dozer Blade Up

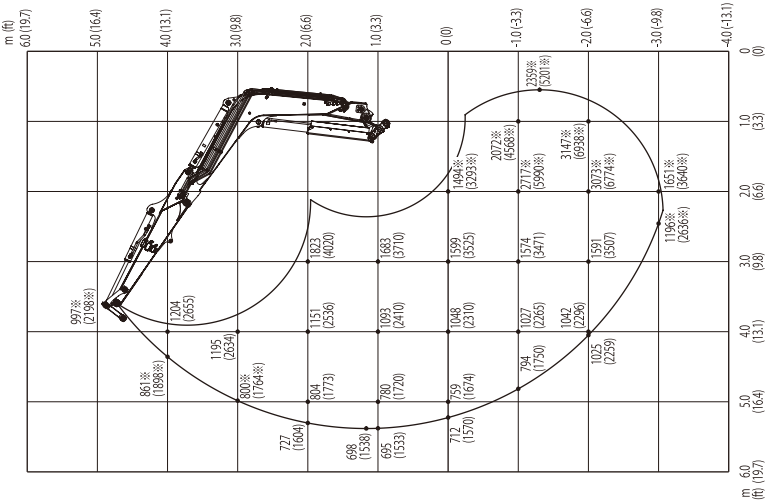

Over Front ; Dozer Blade Down
(If equipped with an emergency shut-off valve)

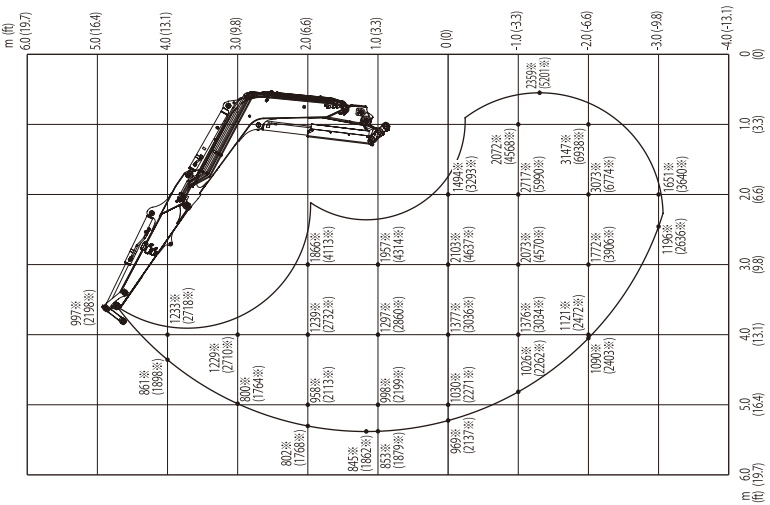

AJ4K029EN

<Cab> Long arm

Units: kg(lbs.)

Over Side ; Dozer Blade Up

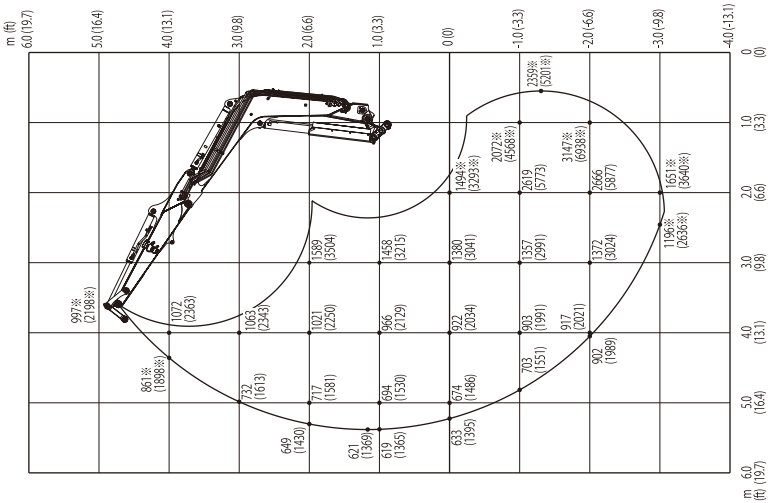

Over Rear ; Dozer Blade Up

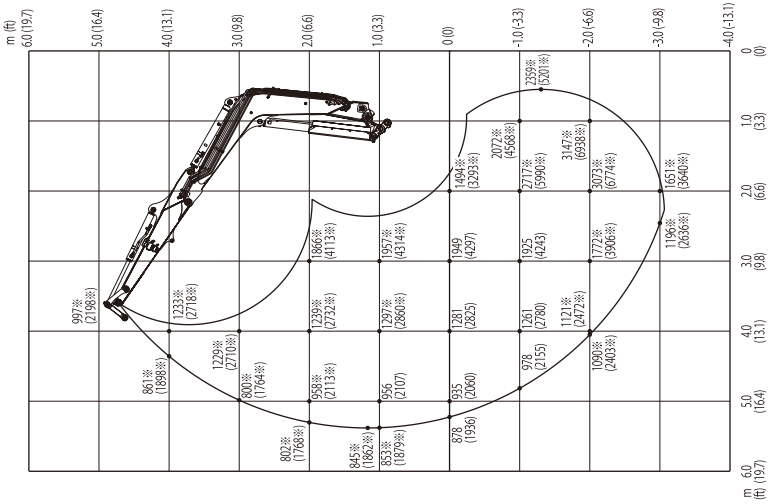

AJ4K030EN

<Canopy> Long arm

Units: kg(lbs.)

Over Front ; Dozer Blade Up

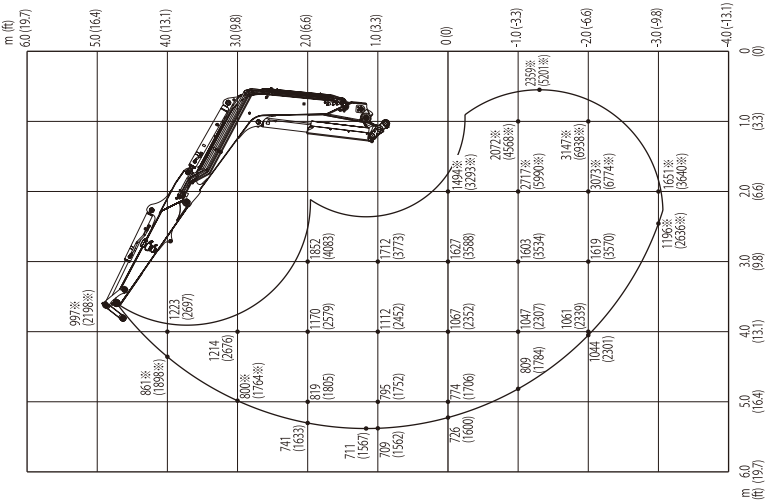

Over Front ; Dozer Blade Down
(If equipped with an emergency shut-off valve)

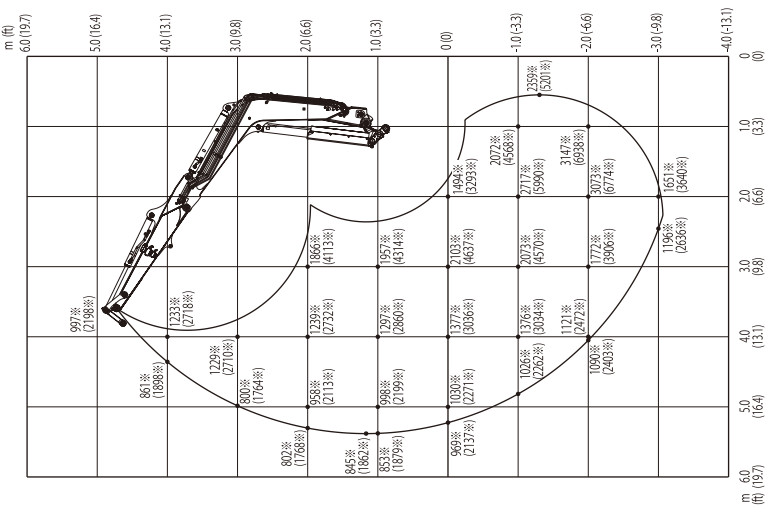

AJ4K031EN

<Canopy> Long arm

Units: kg(lbs.)

Over Side ; Dozer Blade Up

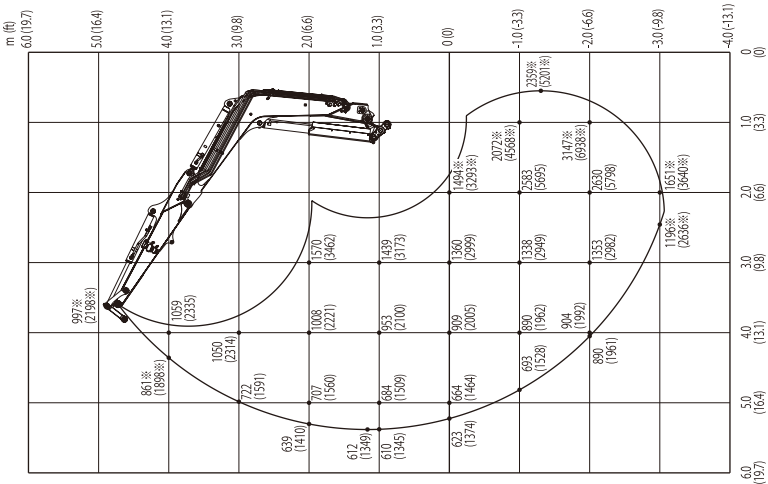

Over Rear ; Dozer Blade Up

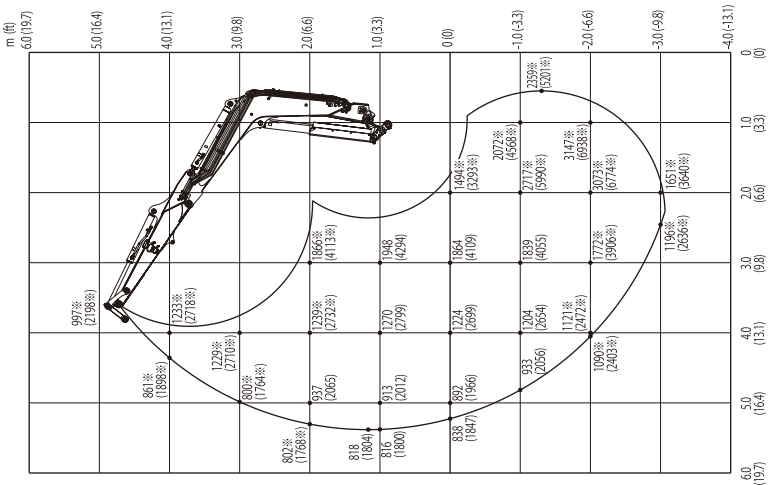

AJ4K032EN

<Cab> Standard arm

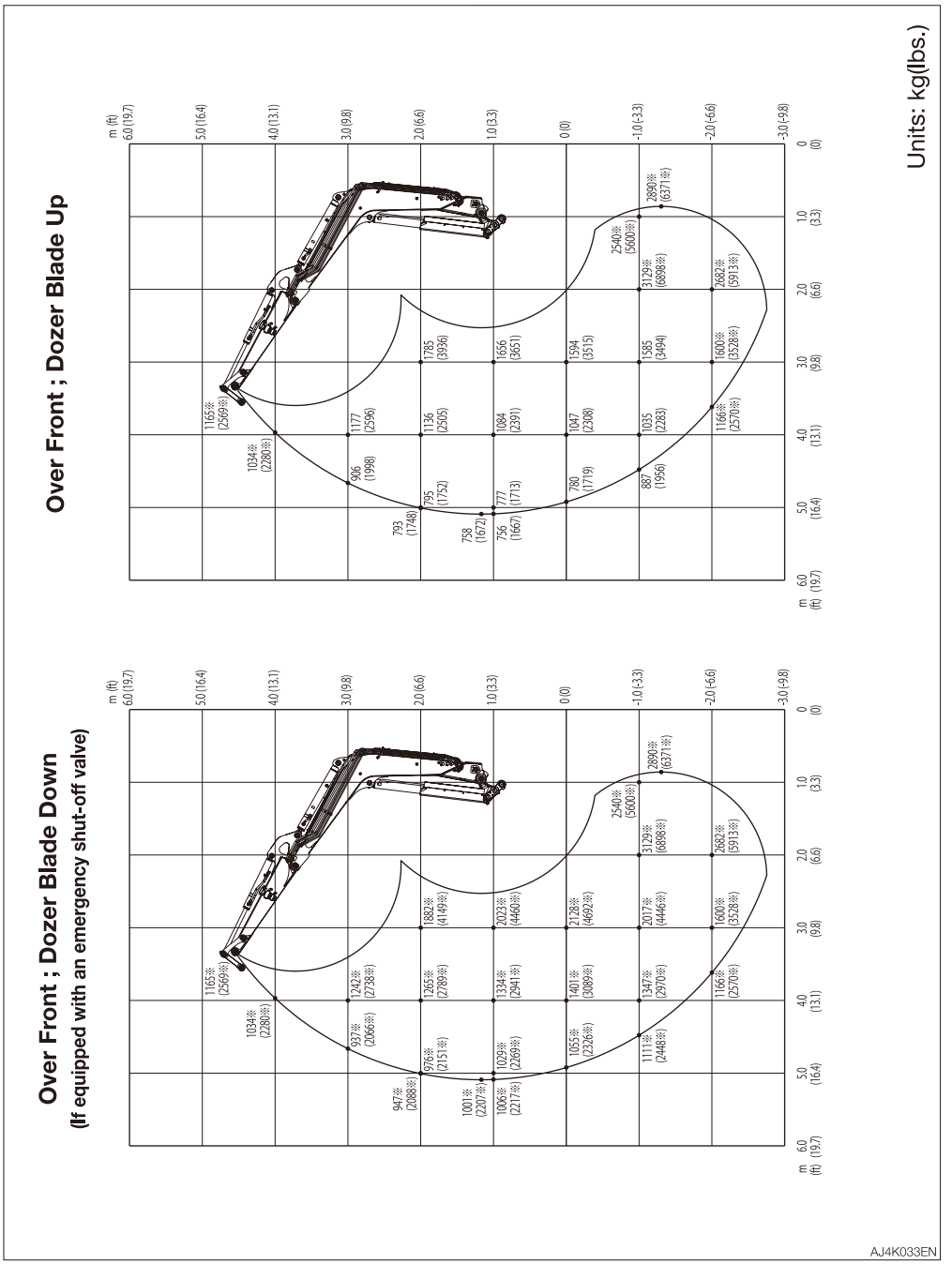

<Cab> Standard arm

Units: kg(lbs.)

Over Side ; Dozer Blade Up

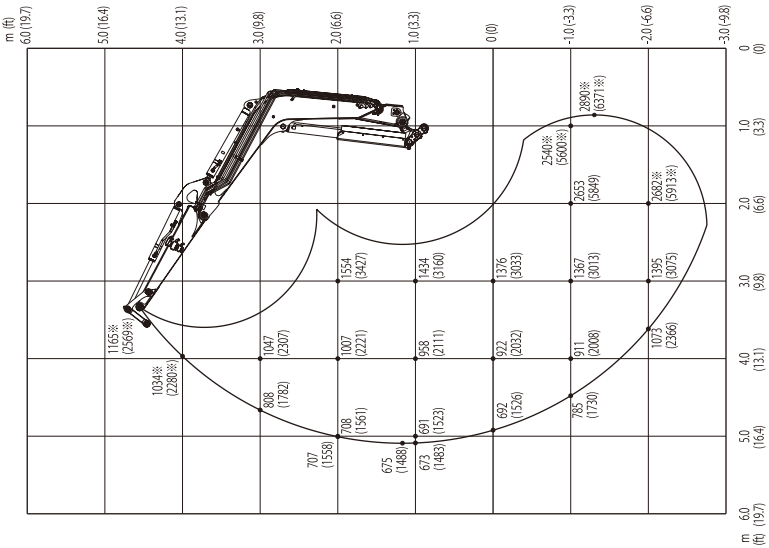

Over Rear ; Dozer Blade Up

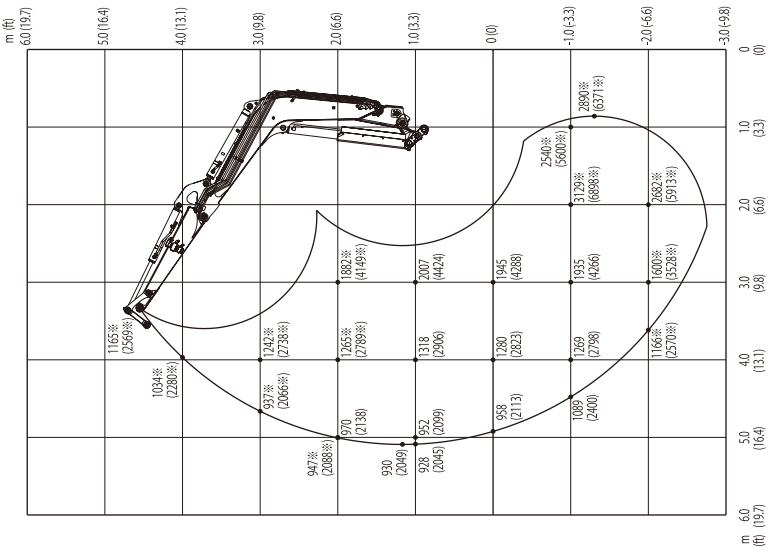

AJ4K034EN

<Canopy> Standard arm

Units: kg(lbs.)

Over Front ; Dozer Blade Up

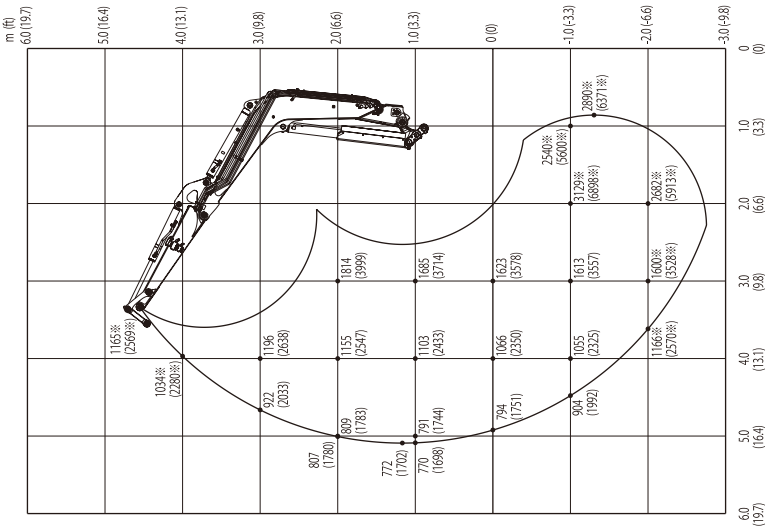

Over Front ; Dozer Blade Down
(If equipped with an emergency shut-off valve)

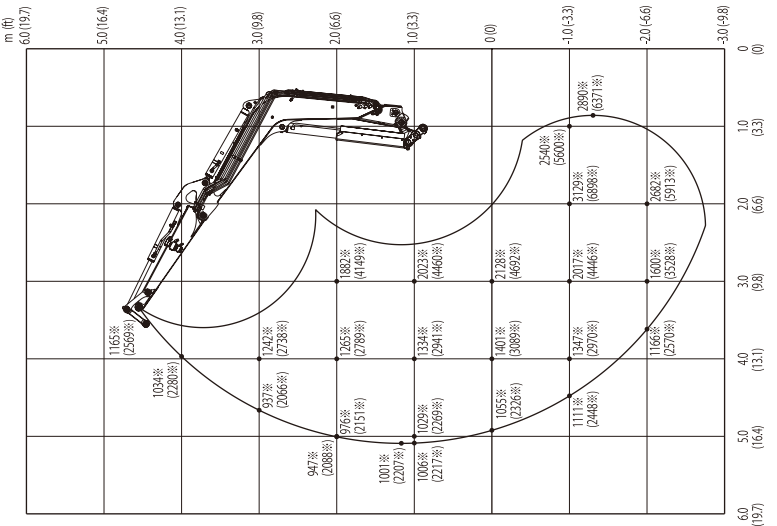

AJ4K035EN

<Canopy> Standard arm

Units: kg(lbs.)

Over Side ; Dozer Blade Up

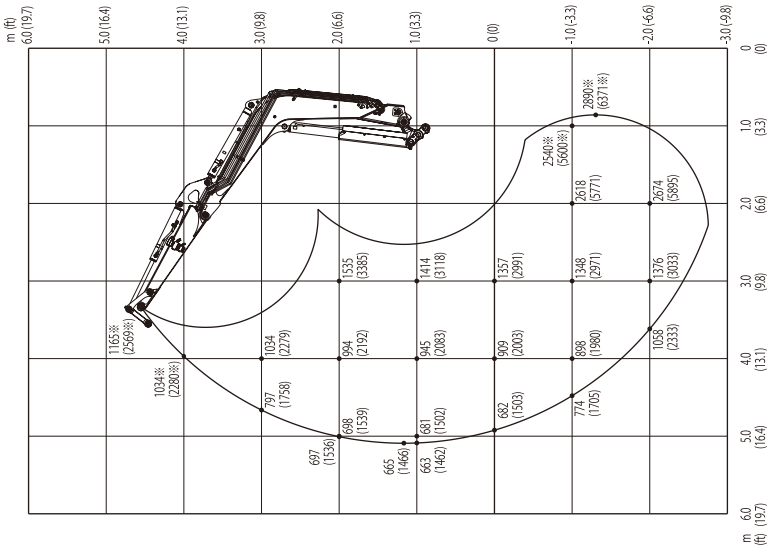

Over Rear ; Dozer Blade Up

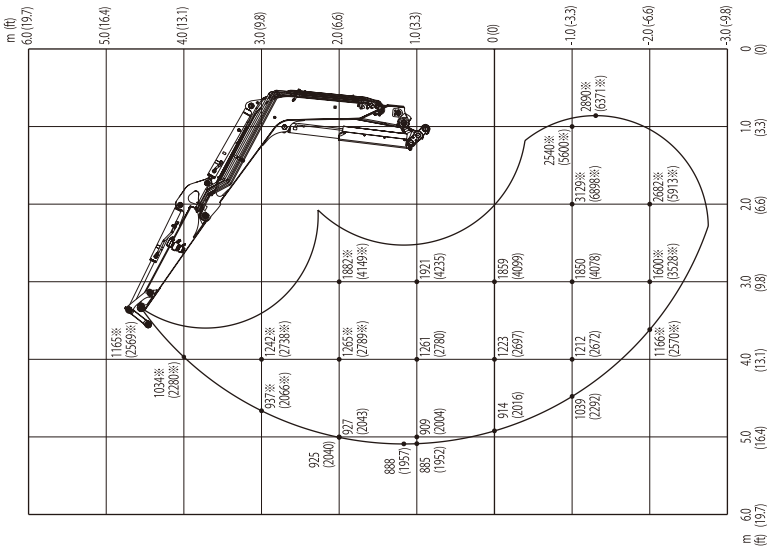

AJ4K036EN

OPTIONS

GENERAL PRECAUTIONS

SAFETY PRECAUTIONS

⚠ WARNING

When removing or installing an attachment or optional part, take the following precautions.

- Consult with Takeuchi before installing an optional attachment.
- Do not use any attachments not approved by Takeuchi. Doing so may cause safety problems. Or, it may adversely affect the machine's operation or service life.
- We will not be held responsible for any injuries, accidents or damage to its products caused by the use by a non-approved attachment.
- Select a firm, level work area. Also, be sure to park in a well ventilated place.
- Clear obstacles and dangerous objects, and clean up spilled fuel immediately.
- When lifting, be sure to designate a person to act as a signalman. Follow the instructions of the signalman regarding the procedure and measures.
- When it is necessary to temporally place a heavy object or an attachment on the ground during removal or installation, be sure to place it in a stable position.
- Keep everyone out of the area when lifting. There is a hazard of objects falling or contacting with people in the area.
- Use a crane to move heavy objects (25 kg (55 lb.) or greater).
- Before removing a heavy object, be sure to put a support to it. When lifting with a crane, pay attention to the center of gravity of the load to keep the machine in balance.
- Do not operate the machine while the load is lifted by a crane stand.
- Use the proper procedure when mounting a boom or arm; otherwise serious damage could result. Consult your sales or service dealer for help.

CAUTIONS WHEN INSTALLING ATTACHMENTS

Be sure to perform a test operation after an optional or other special attachment has been replaced. Inspect the hydraulic oil level and recharge it as necessary. Consult your sales or service dealer for detailed procedures on installing/removing attachments.

CAUTIONS WHEN OPERATING ATTACHMENTS

⚠ WARNING

Long attachments reduce stability of the machine. The machine may tip over if it loses the balance when traveling or slewing on slopes.
Never perform the operations listed below as they are extremely dangerous.

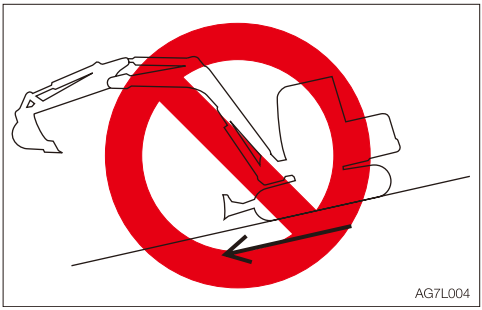

- Traveling down the slopes with the attachment raised



- Traveling across slopes

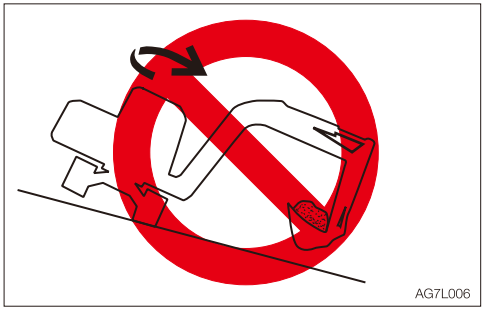

- Slewing on slopes
- If there is a heavy attachment is installed, the machine takes longer distance than usual to come to a complete stop when the stopping operation is performed. Carefully judge the distance so as not to bump into an object around the machine. Keep a safe distance from surrounding obstacles. When a heavy attachment is installed, natural drop (the gradual dropping of the attachment under its own weight when it is stopped in midair) increases.
- The machine can tip over more easily in the lateral direction than in the longitudinal direction.
  - Do not slew sideways with a heavy load at the how attachment. In particular, do not slew sideways on slopes.
  - The attachment is heavier for machines equipped with breakers or crushers than for machines equipped with the standard bucket. Do not operate such machines sideways, especially digging downhill.
- When a long arm is installed, the operating range increases. Carefully judge the distance so as not to bump into an object around the machine. Keep a safe distance from surrounding obstacles.

ATTACHMENT COMBINATION TABLE

The table below shows which bucket should be installed when the machine is using a standard arm or a long arm. Select a proper bucket by following the table.

⚠ WARNING

- **Consult with Takeuchi before installing an optional attachment.**
- **Do not use any attachments not approved by Takeuchi. Doing so may cause safety problems. Or, it may adversely affect the machine's operation or service life.**
- **We will not be held responsible for any injuries, accidents or damage to its products caused by the use by a non-approved attachment.**

√ :Can be used.
Δ :Can be used only for light operations (digging and loading of dry and loose soil or mud)
— :Cannot be used.
Total bucket mass = Bucket mass + Heaped bucket load (specific gravity: 1.8)

Bucket	Rated capacity m^3 (cu.yd.)	Bucket cutting width mm (inch)	Standard arm 1450 mm (57.1 in.)	Long arm 1760 mm (69.3 in.)
630 W (S.T.D.)	0.141 (0.17)	635 (24.9)	√	√
Total bucket mass = Within 362 kg (798 lb.)		Within 635 (24.9)	√	√

SELECTING A LEVER PATTERN

The operating pattern of the left and right operating levers can be changed.

⚠ WARNING

Before starting the engine, check the selector to see which operating pattern the left and right operating levers are set.

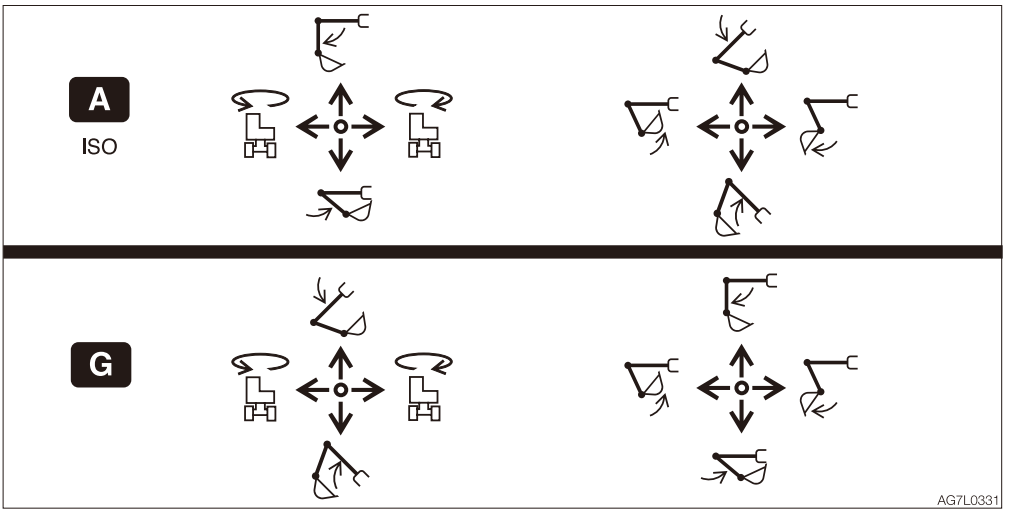

SWITCHING THE LEVER PATTERN

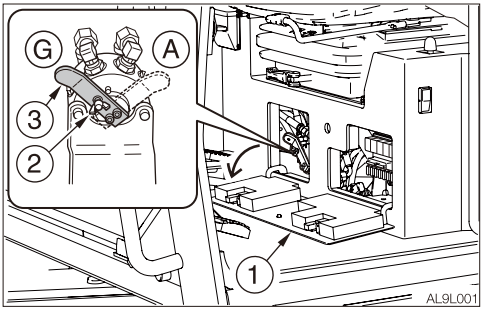

(A) : ISO pattern
(G) : G pattern

1. Park the machine on a flat and rigid ground, and stop the engine.
2. Fully open the cab door and fix it in place (If equipped).
3. Open the cover (1).
4. Loosen the wing bolt (2).
5. Turn the selector valve lever (3) to change the pattern.
6. Tighten the wing bolt (2) and fasten the lever (3) in place.
7. Close the cover (1).
8. Confirm the lever pattern.

HYDRAULIC BREAKER

For handling of the breaker, read the hydraulic breaker's manual, provided separately.

IMPORTANT: When installing an attachment, make sure that it is appropriate for the machine being used. Contact your sales or service dealer for advice on selecting attachments.

CAUTIONS ON OPERATING

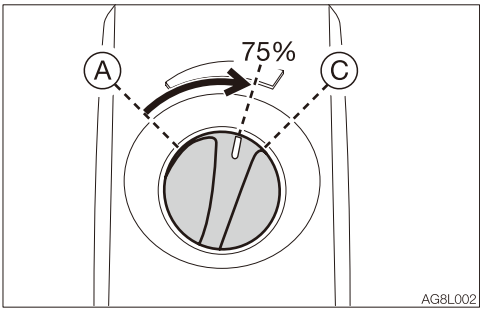

- Start the engine and run it at 75% of the maximum speed.

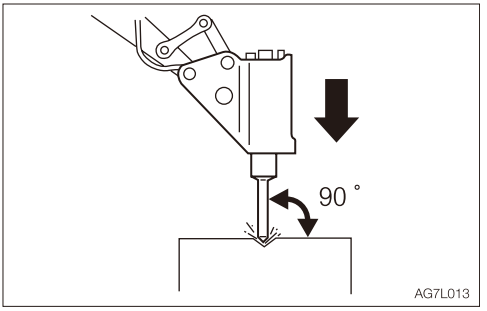

- Pound with the chisel pressed perpendicular to the surface to be pounded.
- When pounding, press the chisel properly against the object to be broken so as to avoid pounding the air.

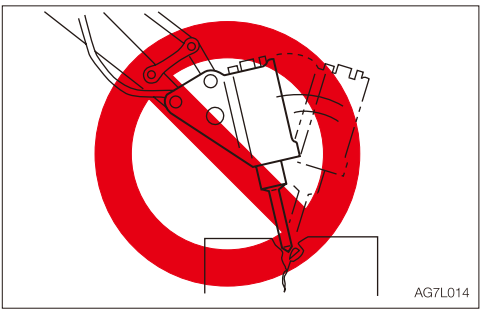

- Do not pry with the chisel or do not pry while pounding.
- Do not move the chisel while pounding.
- Do not pound continuously for over 30 seconds on the same surface.



- Do not pound with the cylinder fully extended or retracted (at the stroke end). Leave a margin of at least 50mm(2 in).

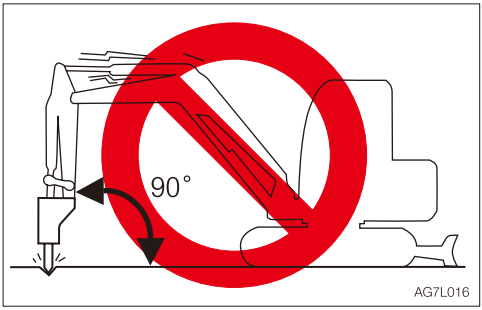

- Do not pound with the arm placed perpendicular to the ground surface.

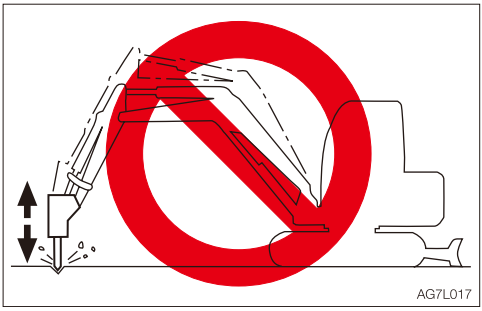

- Do not drop the breaker itself on the object to be broken in order to break it.
- Do not move objects to be broken or rocks with the breaker itself.
- Slew the machine occasionally to cool the engine.
- If a hydraulic hose is vibrating abnormally, nitrogen gas may be leaking from the accumulator. Ask for an inspection early.

REPLACING THE HYDRAULIC OIL REGULARLY

When a hydraulic breaker is used, the oil deteriorates more quickly than that used for a usual operation. Be sure to replace the hydraulic oil and the return filter elements.

- Failure to replace these in time can lead to damage to the machine and the breaker hydraulic system. To improve the service life of the hydraulic systems, be sure to replace the hydraulic oil and return filter element after the number of hours shown on the diagram below.
- When replacing the hydraulic oil, clean the suction strainer.

Replacement interval (hours)

Item	Hydraulic oil	Filter element
1st time	—	25
2nd time	—	100
Periodically	1200 (600)	200

When the breaker operating ratio is 100%.

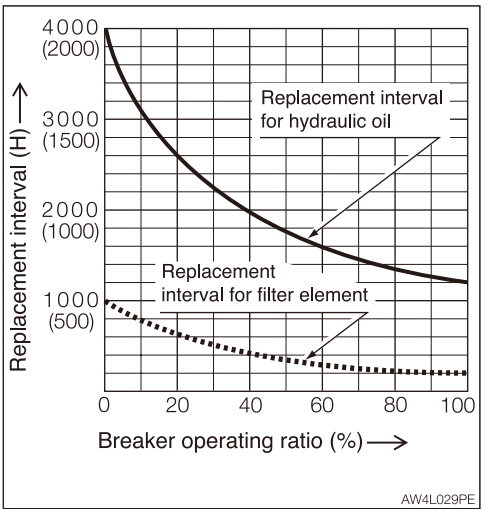

( ): When using conventional antiwear hydraulic oil.

TRAVEL ALARM

The alarm sounds while the machine is traveling and stops when the machine stops traveling.
If the alarm does not sound when the machine travels, the fuse may be blown. Inspect the fuses.

⚠ WARNING

If the fuse blows again soon after replacement, then the electric system is likely faulty. It may pose a fire hazard if not properly repaired. Contact your sales or service dealer for advice.

1. Turn the starter key to the OFF position to stop the engine.

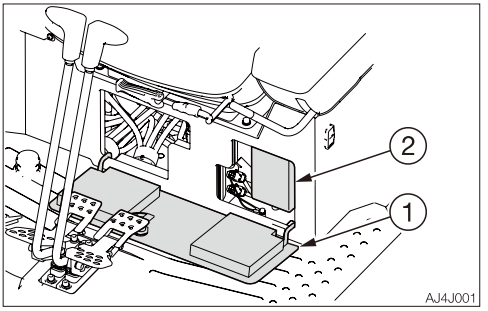

2. Open the cover (1).
3. Open the fuse box cover (2).
4. Check for any blown fuses (2).

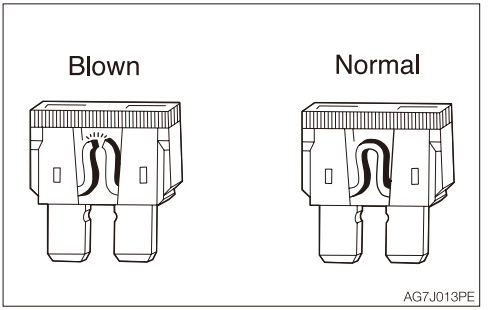

5. If a fuse is blown, replace it with a spare fuse of the same capacity.

Fuse layout and circuits protected

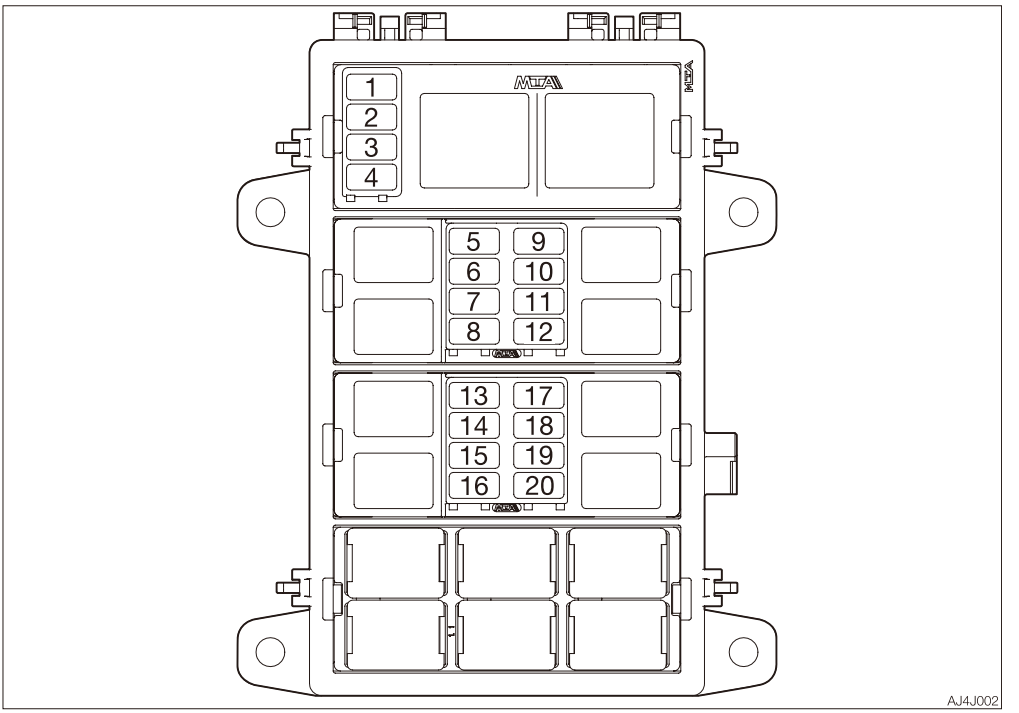

No.	Capacity	Symbol	Protected circuit	Fuse No.
1	3A		GPS (B)	F4D
2	25A		Fuel supply pump	F3D
3	10A		Starter switch	F2D
4	10A		Horn	F1D
5	25A	CAB	Cab light	F4A
6	15A	OPT (1)	Option (1)	F3A
7	10A 15A*		Wiper	F2A
8	15A		Light	F1A
9	10A		Immobilizer	F8A
10	10A	CAB	Cab interior power supply	F7A
11	15A		Safety lock lever	F6A
12	25A	MAIN CTL	Main controller	F5A
13	25A		Blow-by heater	F4B
14	15A	OPT (2)	Option (2)	F3B
15	10A		Air conditioner compressor	F2B
16	25A		Air conditioner	F1B
17	10A	MAIN CTL	Main controller	F8B
18	3A		GPS (ACC)	F7B
19	10A	G	Alternator, **Travel alarm**	F6B
20	5A		Switch lighting	F5B

* : For machines equipped with rear wiper

MEMO

OPTIONAL EQUIPMENT MASS

OPTION		
Steel crawler (Including shoe guide)		180 (395)
Segmental rubber crawler (Including shoe guide)		185 (410)
Center guide		10 (20)
Auxiliary hydraulic lines	Second auxiliary hydraulic line	15 (35)
	Third auxiliary hydraulic line	20 (45)
	Third auxiliary hydraulic line (hard-lock)	15 (35)
	Third auxiliary + Fourth hydraulic lines	35 (75)
	Third auxiliary (hard-lock) + Fourth hydraulic lines	30 (65)
Boom emergency shut-off valve		10 (20)
Boom + Arm emergency shut-off valves		15 (35)
Guard, roof		55 (120)
Guard, front		40 (90)
Air conditioning device		15 (35)

Units: kg (lb)

*: Mass of optional equipment is added to the standard machine mass.
*: This table only contains the optional equipment of 10kg (20lb) or more in mass.

BIODEGRADABLE OIL

Biodegradable oil is a new type of hydraulic oil that is decomposed into carbon dioxide and water by microorganisms in the soil and water. It is highly safe for living organisms and offers advantages in term of environmental protection.

- Recommended biodegradable oil: Mobile EAL Envirosyn 46H (an ester synthetic oil) and Panolin HLP Synth 46 (an ester synthetic oil).
  When replacing the mineral oil with biodegradable oil, use either of the above brand oil.
  Note that there are oils of other brands, even among ester synthetic oils, which may damage O-rings, packings and seals.
- When switching from a mineral oil to a biodegradable oil, the parking brake torque decreases by about 30%.

REPLACING THE MINERAL OIL WITH BIODEGRADABLE OIL

- A mixture of mineral oil and biodegradable oil or a mixture of different brands of biodegradable oils will result in a decrease in performance of the hydraulic oil, biodegradability and safety. The inside of the hydraulic oil system must be flushed (cleaned) before replacing. The residual mineral oil in the machine should be about 2% or less, as complying with the ISO 15380.
- This operation is dangerous and requires experience. Ask a Takeuchi sales or service dealer for help.

Flushing

To be performed by a Takeuchi sales or service outlet

1. Drain the hydraulic oil (mineral oil) from the hydraulic oil tank and clean the inside of the tank and suction strainer.
   Refer to “Replacing the hydraulic oil and cleaning the suction strainer” on page 5-62.
2. Remove the cylinder hoses and drain the hydraulic oil (mineral oil) from inside the cylinders.
3. Supply new biodegradable oil to the hydraulic oil tank.
4. Bleed the air from the hydraulic oil system.
5. Operate the hydraulic devices for 30 minutes.
6. Drain the biodegradable oil from the tank and cylinders.
7. Replace the hydraulic oil return filter with a new filter.
8. Repeat steps 3 and 4.
9. Operate the hydraulic devices for 30 minutes.
10. Drain the biodegradable oil from the tank and cylinders.
11. Repeat steps 3 and 4.
12. Operate the hydraulic devices for 1 hour.
13. Drain the biodegradable oil from the tank and cylinders.
14. Replace the return filter with a new filter.
15. Repeat steps 3 and 4.
16. Operate the hydraulic devices, then check for oil leakage.

There is no need to flush the hydraulic oil system when switching from biodegradable to mineral hydraulic oil.

CAB OPTIONS

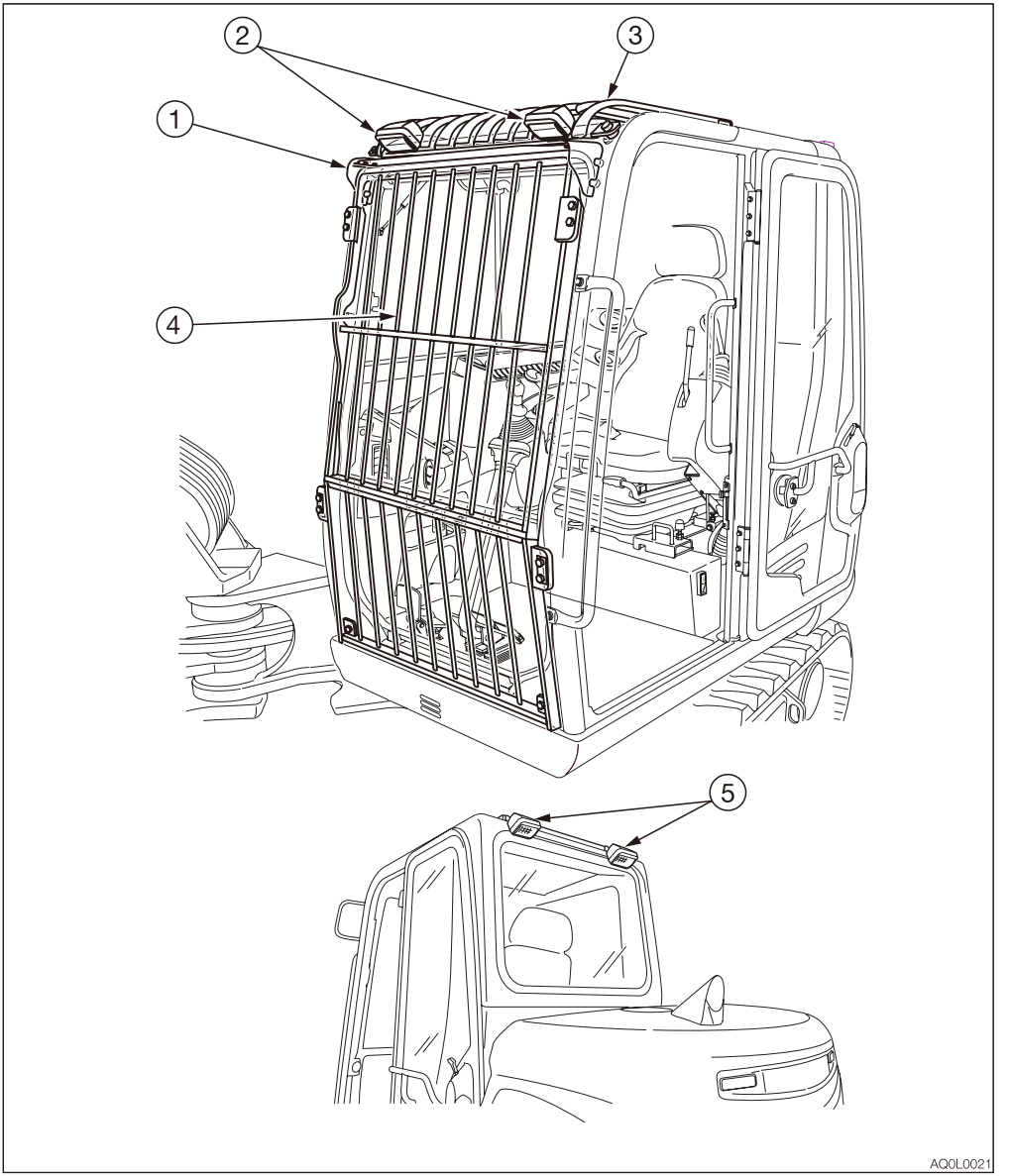

1. Rain guard
2. Front light
3. Roof guard (Level II: ISO 10262)
4. Front guard (Level II: ISO 10262)
5. Rear light

OPERATING LEVER SWITCH KIT 1

HORN BUTTON

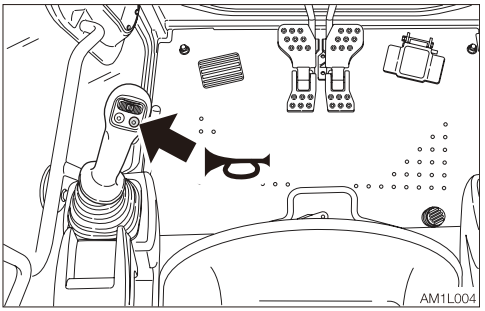

Press the button situated on the left operating lever to blow the horn.

DECELERATION BUTTON

⚠ WARNING

Before operating the deceleration button, set the operating lever to the neutral position and take your foot off the pedals. If the deceleration button is pressed while driving, the machine's operating speed will abruptly change to result in a dangerous situation.

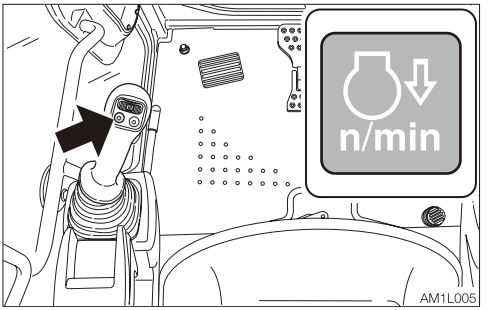

Press this button on the left operating lever to lower the engine speed to low idling. Press the button again to return to the engine speed set with the throttle controller. For safety reasons, it is designed that the deceleration function is activated to set the engine revolutions to low idling whenever the engine is started.
Cancel the deceleration mode by pressing the deceleration button as necessary.

Note: This deceleration button is capable of decreasing the engine speed and reducing the fuel consumption, with a simple operation, in a situation such as when little engine output is required and thus the operating or the travel levers are in neutral.

TRAVEL SPEED BUTTON

⚠ WARNING

When a load greater than a set value is applied during traveling in 2nd (high) speed, the speed will automatically slow down to 1st (low) speed. When the load becomes lighter, the speed will increase and return to 2nd (high) speed. It should be noted that the travel speed changes depending on the load condition (for machines with the automatic travel shift-down system).

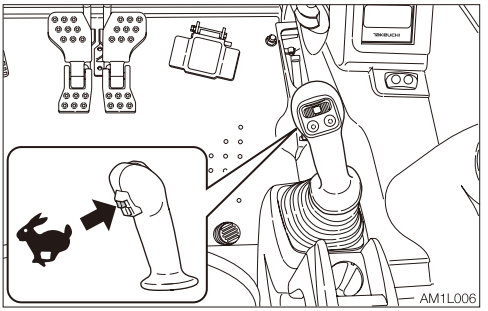

Press this switch to set the travel speed to 2nd (high) speed. Press it again to return to 1st (low) speed.

AUXILIARY 1ST SWITCHES

Auxiliary hydraulic buttons

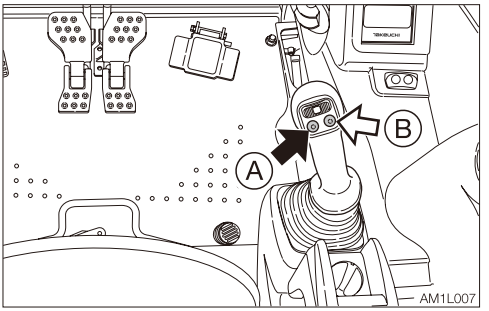

Press those buttons to control the flow of the oil in the first auxiliary hydraulic lines.

- Proportional control of the auxiliary hydraulic circuit is not possible.

(A).....Hydraulic oil flows to the left auxiliary line (a).

(B) .....Hydraulic oil flows to the right auxiliary line (b).

Slider switch (Proportional control)

Proportional control allows for slow-to-fast/ fast-to-slow movement of attachment. Example: If you move the slider switch half way, the attachment will move at approximately one-half the speed.

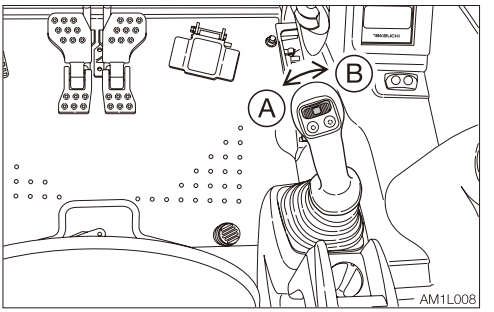

Move this switch to control the flow of the oil in the first auxiliary hydraulic lines.

(A).....Hydraulic oil flows to the left auxiliary line (a).

(B) .....Hydraulic oil flows to the right auxiliary line (b).

Refer to “Auxiliary hydraulic lines (If equipped)” on pages 2-112 to 2-117.

AUXILIARY 2ND/4TH SWITCH

Slider switch
(Proportional control)
Proportional control allows for slow-to-fast/ fast-to-slow movement of attachment.
Example: If you move the slider switch half way, the attachment will move at approximately one-half the speed.

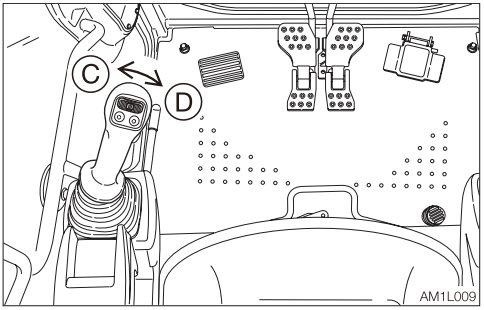

Move this switch to control the flow of the oil in the second auxiliary hydraulic lines.
(C): .....Hydraulic oil flows to the left auxiliary line (c).
(D): .....Hydraulic oil flows to the right auxiliary line (d).

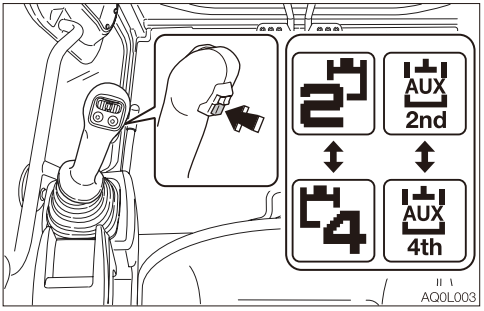

To use the auxiliary 4th hydraulic line, press the auxiliary 2/4 select button to change to the operation of the auxiliary 4th.
Refer to “Auxiliary hydraulic lines (If equipped)” on pages 2-112 to 2-117.

AUXILIARY 2/4 SELECT BUTTON

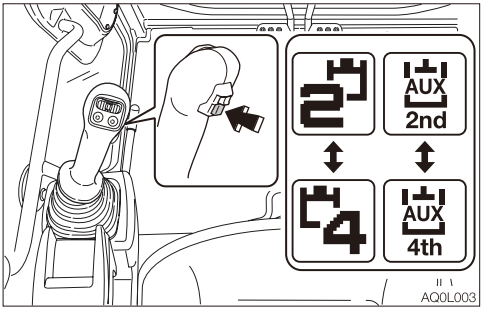

This button is used to change from the second auxiliary operation to the fourth auxiliary operation.
Pressing this button displays the second auxiliary on the display to indicate that the second auxiliary operation is enabled.
Pressing this button one more time displays the fourth auxiliary on the display to indicate that the fourth auxiliary operation is enabled.
The actual operation is performed with the auxiliary 2nd/4th switch (slider switch).

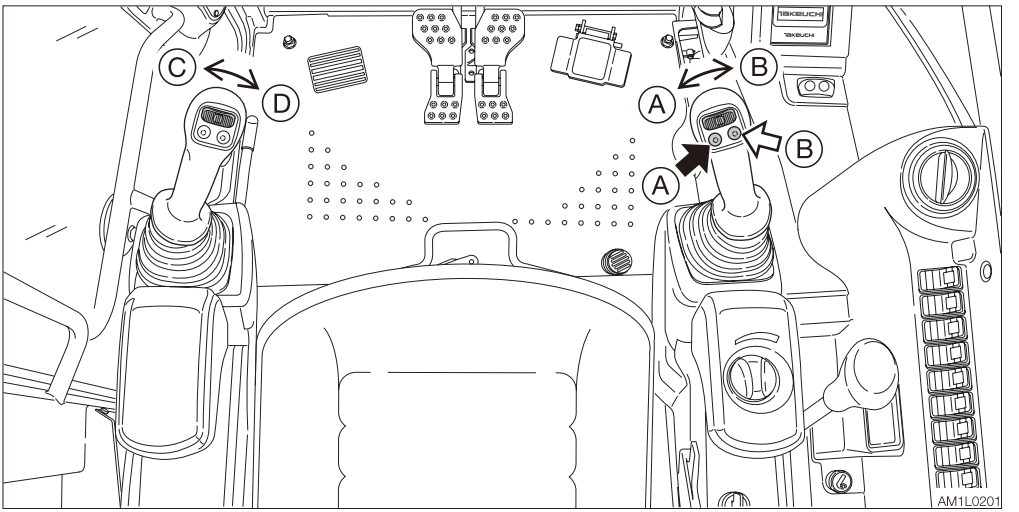

Operating

Press those buttons to control the flow of the oil in the first/second auxiliary hydraulic lines.

(A).....Hydraulic oil flows to left auxiliary line (a).

(B) .....Hydraulic oil flows to right auxiliary line (b).

(C) .....Hydraulic oil flows to left auxiliary line (c).

(D) .....Hydraulic oil flows to right auxiliary line (d).

Refer to “Auxiliary hydraulic lines (If equipped)” on pages 2-112 to 2-117.

Releasing the residual pressure

After the auxiliary hydraulic circuits have been used, pressure remains in the circuits. This is called the residual pressure. Release this residual pressure before disconnecting the lines.

Perform the residual pressure releasing within 10 minutes after the engine stopping.

1. Park the machine on a flat, rigid and safe ground.
2. Stop the engine.
3. Lower the safety lock lever to the unlocked position.
4. Turn the starter switch to the ON position.
5. Press the auxiliary hydraulic switches several times to release the residual pressure in the auxiliary hydraulic circuitry.

TAKEUCHI SECURITY SYSTEM

The Takeuchi Security System is a system that allows only registered starter keys to be used for starting the engine.
The engine cannot be started with any unregistered or counterfeit starter keys. If a registered starter key is lost or stolen, you can set the system to delete the registered key information, so that the lost or stolen key cannot be used to start the engine. Although machine theft cannot be completely prevented, the system certainly helps reduce the risk of theft.

STARTER KEY

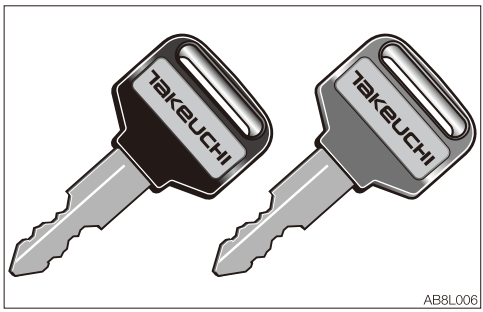

There are two types of starter key, red and black, which can be registered in the Takeuchi Security System.
The red key is the master key. The black key is the starting key.

STARTING THE ENGINE

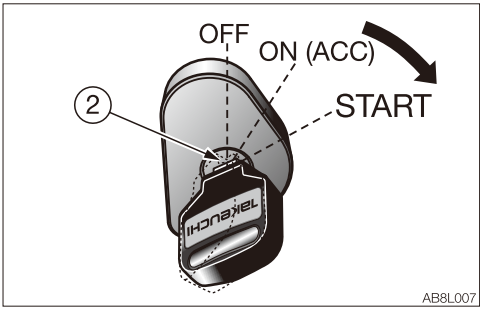

The engine can be started using the normal method with a registered BLACK key.
The engine cannot be started using the RED master key.
Refer to Chapter 3, “Starting and stopping the engine”.

If an attempt is made to start the engine with an unregistered key:

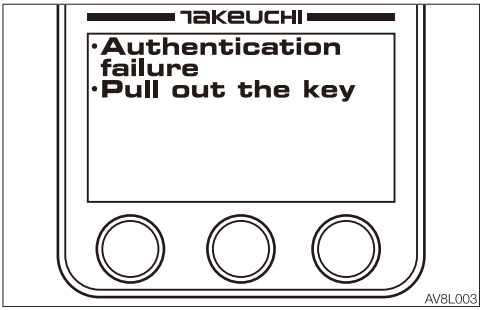

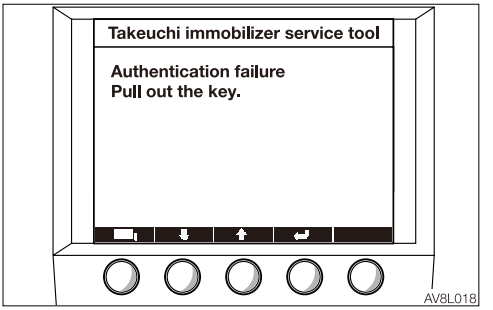

If an unregistered starter key is turned from the OFF to the ON (ACC) position, the message “Authentication failure” appears and the alarm starts sounding.
If this attempt is repeated five times in a row, the horn sounds for two minutes, and the engine cannot be started. The horn stops when the key is turned to the OFF position.

REGISTERING AND DELETING THE STARTER KEY

⚠ WARNING

- **Sit on the operator's seat.**
- **Raise the safety lock lever to the locked position.**
- **Clear all people from the machine and the area.**
- **Sound the horn to warn people around the machine.**

Registration may fail if the starter key is on a keyring or keychain; remove it before starting registration.
A malfunction could occur if multiple starter keys are brought near to the key cylinder. Be sure that no starter keys other than the correct key are near the key cylinder during registration.

Starter key registration procedure
For Steps 1 to 6 below, complete each step and proceed to the next one within five minutes. If no operation is performed for five minutes during this procedure, the system returns to the initial state.
From Step 7 onward, the system automatically ends the operation if no operation is performed for five minutes.

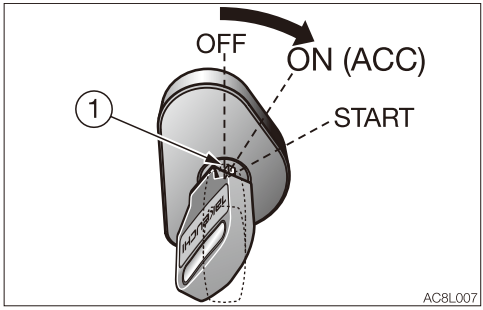

1. Insert the master key (1) into the starter switch and turn the key from the OFF to the ON (ACC) position.

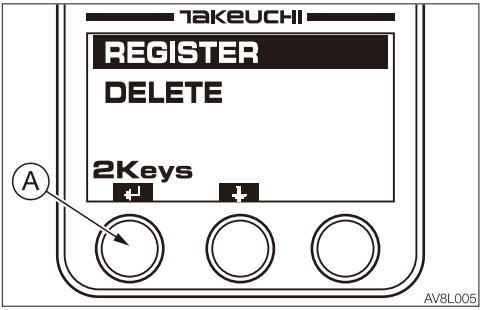

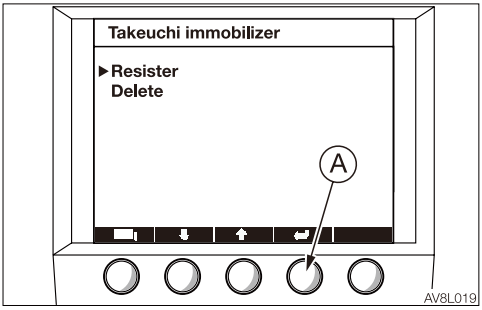

2. On the LCD, select “REGISTER” and press (A).

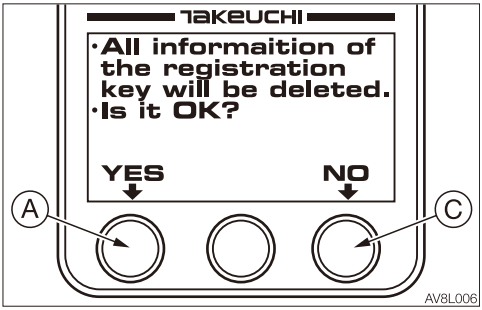

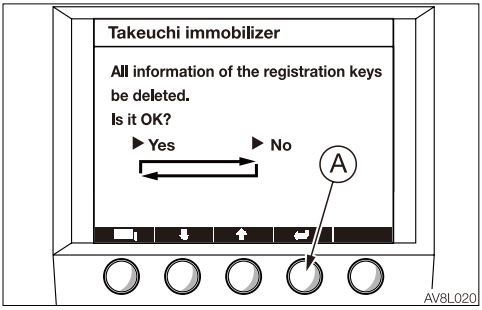

3. Select whether to delete all of the existing registration information.

<Canopy>

YES (A): All registration information will be deleted; register a new key.

NO (C): A new starter key registration will be added to the existing registration information.

Do not remove the master key (1) before making a selection, otherwise registration could fail.

<Cab>

On the LCD, select “YES” and press (A): All registration information will be deleted; register a new key.

On the LCD, select “NO” and press (A): A new starter key will be added to the existing registration information.

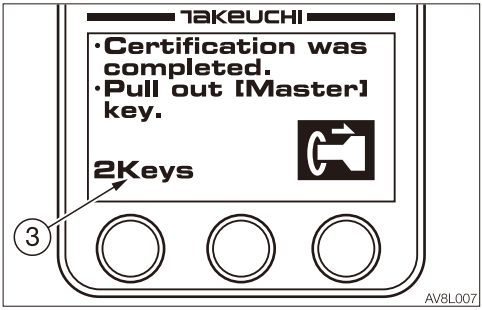

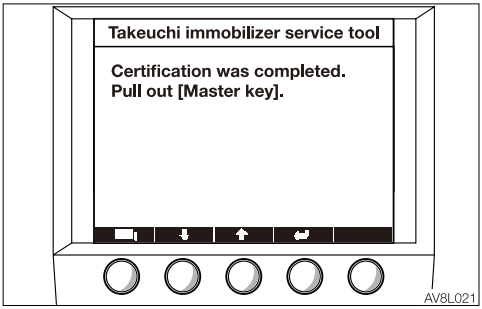

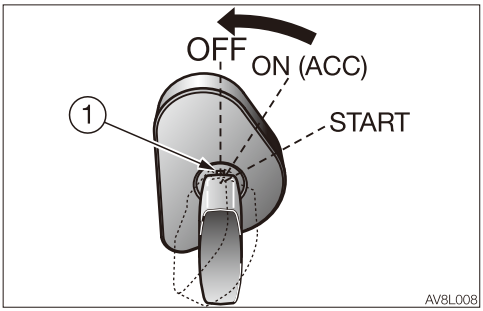

4. When the message “Certification was completed” appears on the LCD, turn the master key (1) from the ON (ACC) to the OFF position, and then remove it from the starter switch.
   The number (3) in the lower left indicates the number of starter keys currently registered (only for canopy). Up to 13 starter keys can be registered.

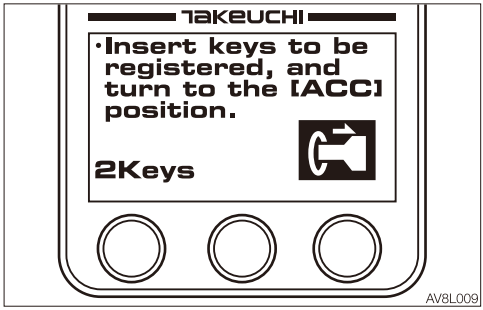

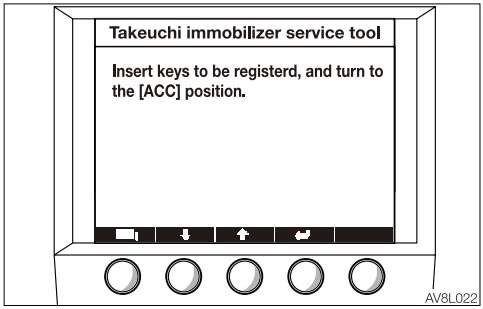

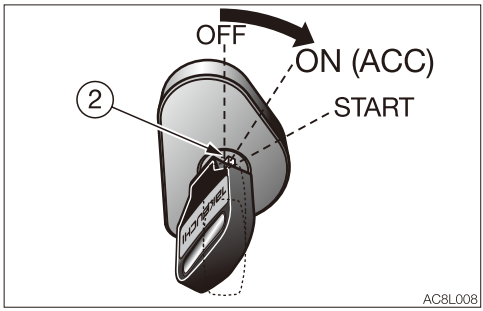

5. Insert the starter key (2) to be registered into the starter switch and turn the key from the OFF to the ON (ACC) position.

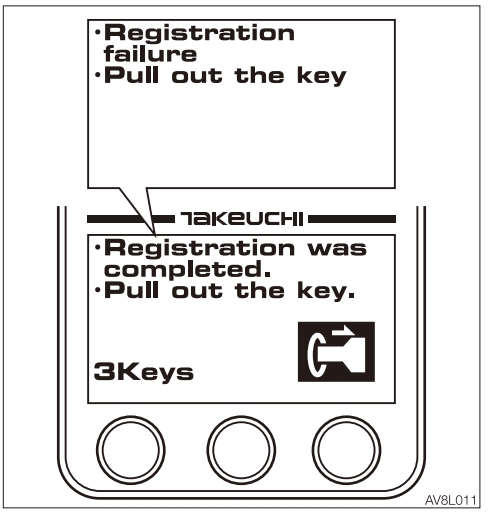

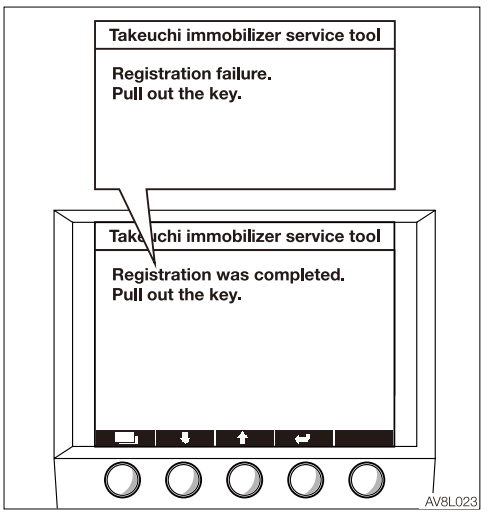

6. If the registration was successfully completed, the message “Registration was completed” appears. This means that the starter key (2) currently inserted has been registered.
   If the registration fails, the message “Registration failure” appears.

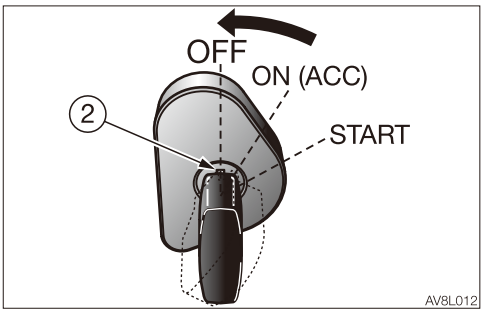

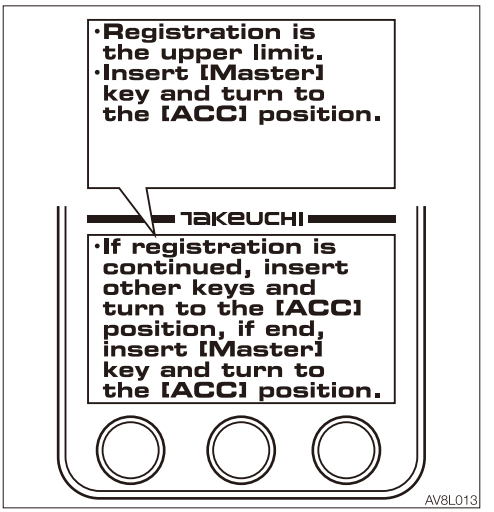

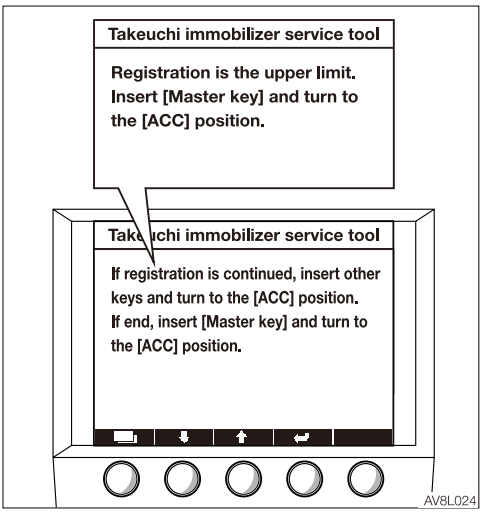

7. Turn the starter key (2) from the ON (ACC) to the OFF position, and then remove it from the starter switch.
   To continue registration, repeat the steps from Step 5.
   To end registration, proceed to Step 8.

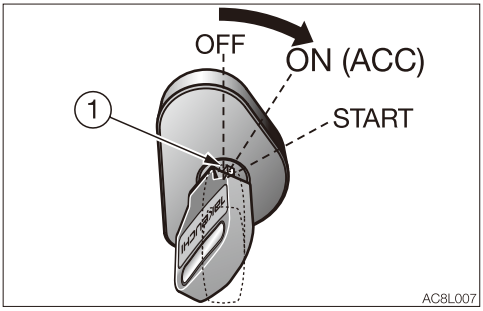

8. Insert the master key (1) into the starter switch and turn the key from the OFF to the ON (ACC) position. Or, wait for five minutes or more.

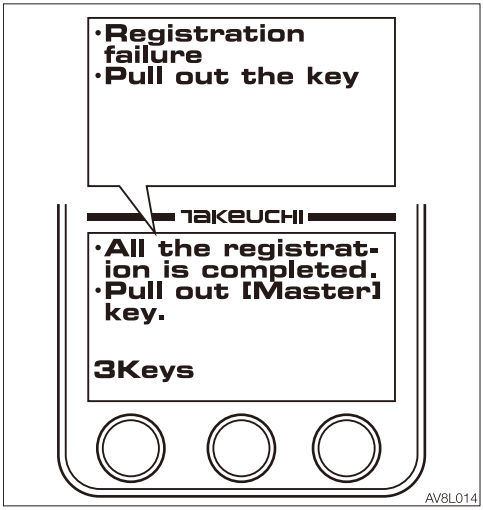

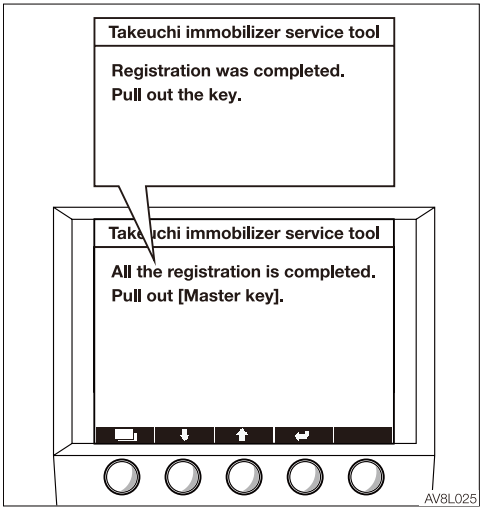

9. If any starter key has been registered, the message “All the registration is completed” appears. Turn the master key (1) from the ON (ACC) to the OFF position, and then remove it from the starter switch to complete the registration.
   If no starter key has been registered, the message “Registration failure” appears, and the registration information is returned to the initial state.

Deleting a registered starter key
The information of each registered starter key can be deleted to cancel its ability to start the engine.

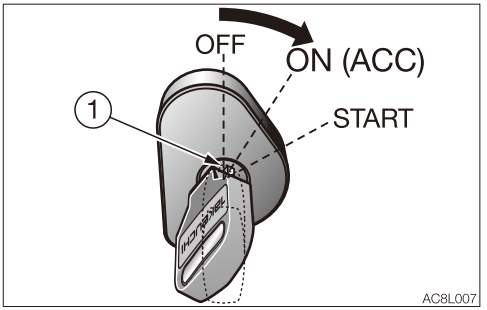

1. Insert the master key (1) into the starter switch and turn the key from the OFF to the ON (ACC) position.

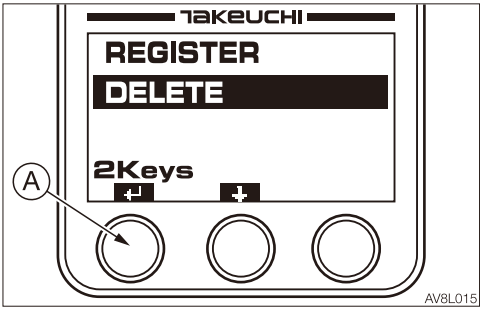

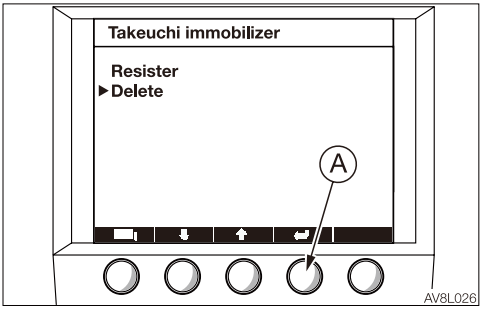

2. On the LCD, select “DELETE” and press (A).

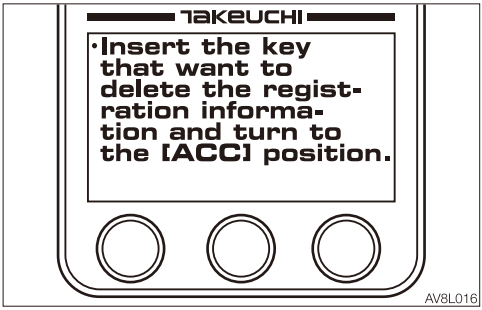

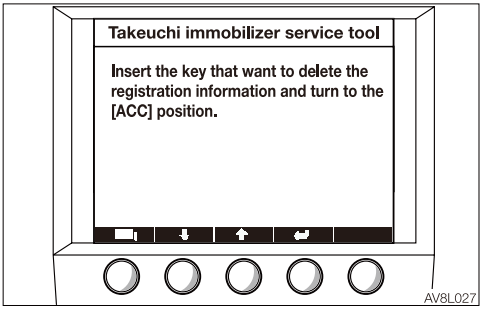

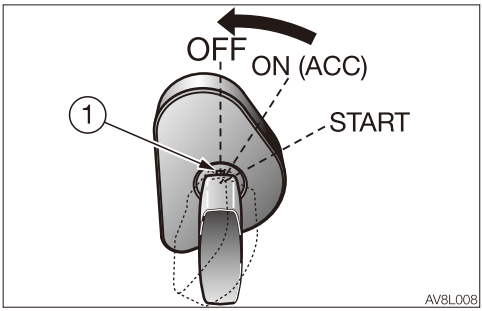

3. When the display shown as the illustration appears on the LCD, turn the master key (1) from the ON (ACC) to the OFF position, and then remove it from the starter switch.
   Note: If the registered key is lost and you want to delete all registration information, please refer to STEP 3 (A) on page 8-24.

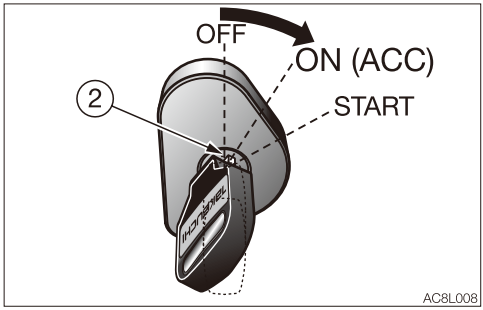

4. Insert the starter key (2) to be deleted into the starter switch and turn the key from the OFF to the ON (ACC) position.

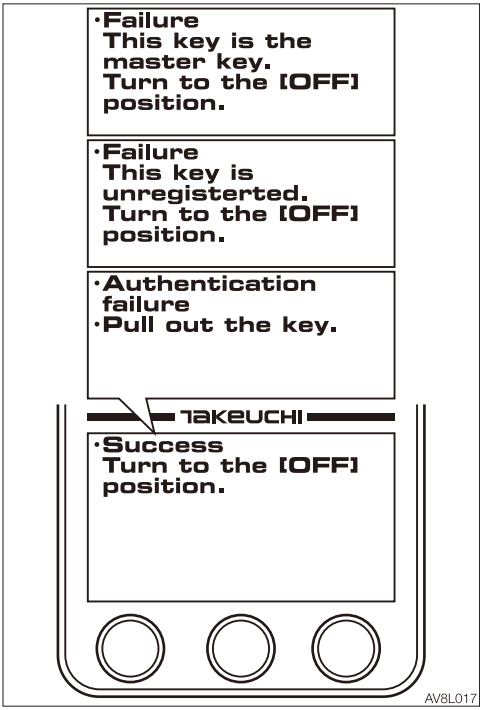

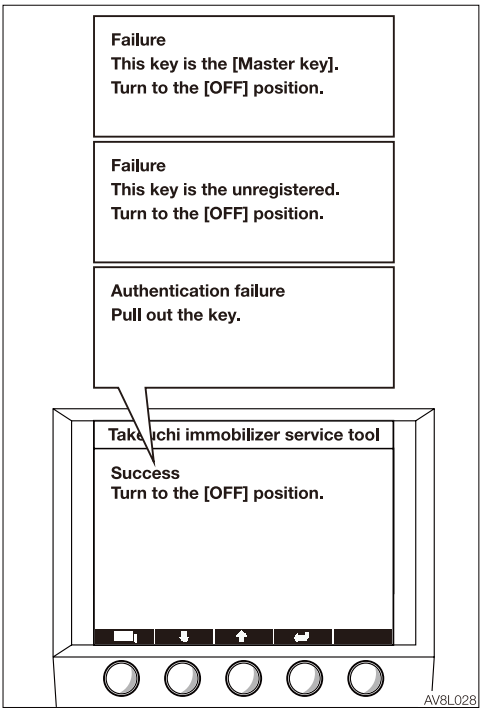

5. If the deletion is successful, the message "Success" appears. This means that the information registered for the starter key (2) currently inserted has been deleted. If the deletion fails, the message "Failure" or "Authentication failure" appears on the LCD. Remove the starter key, and then repeat the steps from Step 1 again.

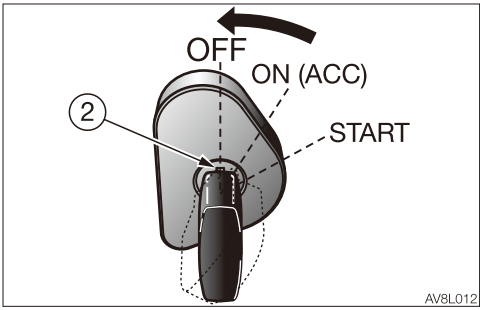

6. Turn the starter key (2) from the ON (ACC) to the OFF position, and then remove it from the starter switch.
   To continue deletion, repeat the steps from Step 1.

IF THE MASTER KEY IS LOST

If you lose your master key, contact your service or sales dealer for assistance.

COUNTRIES WHERE THE SYSTEM CAN BE USED

To use the Takeuchi Security System, “radio wave authentication” must be obtained in the country where the system is to be used. The system can be used in the countries listed below, as of January 2017. Do not use the system in other countries. For details on how to disable the system, please contact your service or sales dealer for assistance.

Countries where the system can be used:
Ireland, Italy, UK, Estonia, Austria, Holland, Cyprus, Greece, Croatia, Sweden, Spain, Slovakia, Slovenia, Czech, Denmark, Germany, Hungary, Finland, France, Bulgaria, Belgium, Poland, Portugal, Malta, Latvia, Lithuania, Rumania, Luxemburg, Iceland, Norway, Liechtenstein, Switzerland, Turkey

LED LIGHTS

If the light fails to turn on after replacement, please contact your sales or service dealer for help.

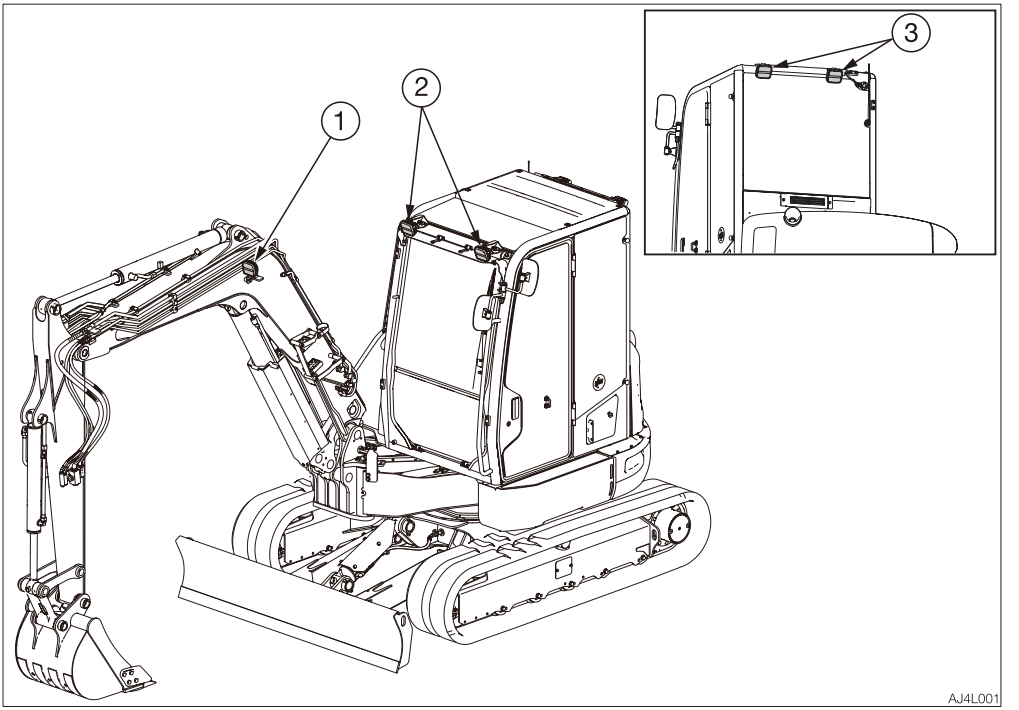

LED lights package 1
Consists of the boom light (1) and the front light (2).
Note: The rear light (3) is not included in the LED lights package 1.

LED lights package 2
Consists of the boom light (1), the front light (2) and the rear light (3).
The light switch is changed.

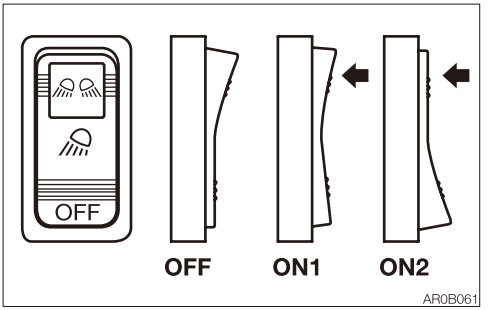

OFF ....Off
ON1 ...The boom light (1), the front light (2) and the switch lamp are turned on.
ON2 ...The boom light (1), the front light (2), the rear light (3) and the switch lamp are turned on.

TAKEUCHI FLEET MANAGEMENT (TFM)

⚠ CAUTION

- **Never disassemble the TFM. It may cause injury or failure.**
- **Any damage to the TFM device or wire harness may cause damage to the device and surrounding equipment.**



- Takeuchi Fleet Management (TFM) is a system that manages machine position information, operation information, and machine status using a communication device installed in the machine.
- Machines that support TFM are equipped with communication devices and are labeled as above.
- A communication contract is required to use TFM. Please contact our sales service for information regarding the contract.

IMPORTANT:

- **The TFM equipment has been tested and found to comply with the limits for a Class A and Class B digital device, pursuant to part 15 of the FCC Rules. These limits are designed to provide reasonable protection against signal interference when the equipment is operated in a commercial environment. This equipment generates, uses, and can emit radio frequency energy and, if not installed and used in accordance with the instruction manual, may cause signal interference to radio communications.**
- **Operation of this equipment in a residential area may cause signal interference in which the user may be required to take additional steps to correct the interference. To correct any interference issue, move the TFM equipped machine away from the affected device, or, if possible; relocate the affected device away from the TFM equipped machine.**
- **The TFM device uses mobile communication. Therefore, it may not function properly in places where the signal is weak (buildings, tunnels, underground, etc.).**
- **The TFM device complies with the RF radiation exposure limits of the FCC Rules. The product is tested for a separation distance of 0 mm from human bodies. It is advised for those with specific sensitive conditions to avoid close device-body exposure.**
- **Please be aware that storing a machine long-term may result in the loss of communication from the TFM device if its internal battery is drained.**
- **The TFM device consumes a small amount of machine battery power even when the key is in the OFF position. For extended storage, see “Maintenance during extended storage period” on page 5-82.**

Specification

M7H (For Europe)

Frequency	Power
UMTS/HSPA:	
900 MHz	0.25 W
2100 MHz	0.25 W
GSM/GPRS:	
900 MHz	2 W
1800 MHz	1 W
GSM/EDGE:	
900 MHz	0.5 W
1800 MHz	0.4 W

M7L (For North America)

Frequency	Power
LTE Band:	
700 MHz	0.2 W
850 MHz	0.2 W
1700 MHz (AWS)	0.2 W
1900 MHz	0.2 W
UMTS Band:	
850 MHz	0.25 W
1900 MHz	0.25 W

M7MG

Frequency	Power
LTE Band:	
700 MHz	0.2 W
850 MHz	0.2 W
1700 MHz (AWS)	0.2 W
1900 MHz	0.2 W
UMTS Band:	
850 MHz	0.25 W
1900 MHz	0.25 W

First Published May 2020
Eighteenth Published March 2026

AJ4EN017

OPERATOR'S MANUAL

TB257FR　Mini excavator

Edited and issued by TAKEUCHI MFG. CO., LTD.

ZTR Control Systems, LLC

955 Green Valley Road
London, Ontario, N6N 1E4
Tel: 1-519-452-1233
FAX: 1-519-452-7764

www.ztr.com
info@ztr.com

April 5, 2019

RE: M7H

To whom it may concern,

This letter is to confirm that ZTR product **M7H** sufficiently demonstrate compliance to CE and the Radio Equipment Directives (RED). The M7H satisfies all the technical regulations applicable to the product within the scope of Council Directives 2014/53/EU, 2015/35/EU and 2014/30/EU. The following tests were completed successfully.

EN 60950-1: 2006+A11: 2009+A1: 2010+A12: 2011+A2: 2013
EN62311:2008
ETSI EN 300 328 V2.1.1 (2016-05)
ETSI EN 303 413 V1.1.1 (2017-06)
Draft ETSI EN 301 489-52 V1.1.0 (2016-11)
Draft ETSI EN 301 489-17 V3.2.0 (2017-03)
Draft ETSI EN 301 489-1 V2.2.0 (2017-03)
Draft ETSI EN 301 489-19 V2.1.0 (2017-03)
EN 55032: 2015
ETSI EN 301 511 V12.5.1 (2017-03)
ETSI EN 301 908-1 V11.1.1 (2016-07)
ETSI EN 301 908-2 V11.1.2 (2017-08)

(Title(s) of regulations, standards, etc.)

All essential radio test suites have been carried out.

The tests were carried out by a notarized 3rd party certification lab MiCOM Labs inc.

This Declaration of Conformity is issued under the sole responsibility of ZTR Control Systems (or the manufacturer).

Please direct any test results questions or concern to ZTR's Engineering Group for clarification.

Regards,

Brent Horne
Director of Product Development
ZTR Control Systems

Trackunit Aps
Gasvaerksvej 24 4.sal, 9000 Aalborg, Denmark
www.trackunit.com

EU declaration of conformity

Hereby, Trackunit Aps declares that the radio equipment type **Trackunit M7MG** complies with the essential requirements of Directive 2014/53/EU.

3.1 (a) protection of health and safety of persons and of domestic animals and the protection of property, including the objectives with respect to safety requirements set out in Directive 2014/35/EU

Standard used: EN 62368-1:2020+A11:2020
EN 62311:2020
EN 62133-2:2012

3.1 (b) adequate level of electromagnetic compatibility as set out in Directive 2014/30/EU

Standard used: EN 301 489-1 V2.2.3
EN 301 489-17 V3.2.4
EN 301 489-19 V2.2.0
EN 301 489-52 V1.2.1

3.2 the equipment is so constructed that it both effectively uses and supports the efficient use of radio spectrum in order to avoid harmful interference.

Spectrum used:	Bluetooth:	2,402 – 2,480 GHz,	Max. 10 dBm EIRP
	Positioning:	1,559 – 1,610 GHz,	Receive only
	Cellular 4G:	B1, B3, B5, B8, B20, B28,	Max. 27 dBm EIRP
	Cellular 2G:	GSM/GPRS/EDGE; 900 / 1800	Max. 33 dBm EIRP

Standard used: EN 300 328 V2.2.2
EN 303 413 V1.2.1
EN 301 511 V12.5.1
EN 301 908-1 V13.1.1
EN 301 908-13 V13.1.1

Complies with the essential requirements of Directive 2011/65/EU and Directive 2015/863/EU on the Restriction of use of certain Hazardous Substances (RoHS 3).

Complies with the essential requirements of the Regulation 1907/2006/EC regarding Registration, Evaluation, Authorization and Restriction of Chemicals (REACh).

Complies with Directive 2012/19/EU on Waste Electrical and Electronic Equipment (WEEE).

Signed for and on behalf of Trackunit Aps
Aalborg, 01 December 2022

DocuSigned by:
Søren Brogaard
DBFCD953D519425...

Søren Brogaard, CEO

ASAHI DENSO

6-2-1 Somejidai, Hamakita-ku, Hamamatsu, Shizuoka 434-0046, Japan

EU DECLARATION of CONFORMITY (DoC)

This declaration of conformity is issued under the sole responsibility of the manufacturer:

Name:	ASAHI DENSO CO.,LTD
Address:	6-2-1 Somejidai, Hamakita-ku, Hamamatsu, Shizuoka, 434-0046 Japan

We declare that the DoC is issued under our sole responsibility and belongs to the following product.

Object of the declaration:

Product Name	Immobilizer
Model Name	CZ156
Accessories	N/A

The object of the declaration described above is in conformity with the relevant Union harmonization legislation:

Radio Equipment (RE) Directive (2014/53/EU)

The following harmonized standards and technical specifications have been applied:

Health & Safety (Article 3.1(a)):	EN 60065: 2014
EMC (Article 3.1(b)):	EN 301 489-1 V2.1.1 EN 301 489-3 V2.1.1 (Final draft)
Radio Spectrum (Article 3.2):	EN 300 330 V2.1.1

Japan, Shizuoka	May 29, 2017	Tomohiro Yaguchi
Place of Issue:	Date of Issue:	Tomohiro Yaguchi Section chief Engineering Department

ASAHI DENSO
6-2-1 Somejidai, Hamakita-ku, Hamamatsu, Shizuoka 434-0046, Japan

UK DECLARATION of CONFORMITY (DoC)

This declaration of conformity is issued under the sole responsibility of the manufacturer:

Name:	ASAHI DENSO CO.,LTD.
Address:	6-2-1 Somejidai, Hamakita-ku, Hamamatsu, Shizuoka, 434-0046 Japan

We declare that the DoC is issued under our sole responsibility and belongs to the following product.

Object of the declaration:

Product Name	Immobilizer
Model Name	CZ156
Accessories	N/A

The object of the declaration described above is in conformity with the relevant statutory requirements:

STATUTORY INSTRUMENTS 2017 No. 1206 TELECOMMUNICATIONS (The Radio Equipment Regulations 2017)

The following designated standards and technical specifications have been applied:

Health & Safety (Regulation 6.1(a)):	EN 62368-1: 2014
EMC (Regulation 6.1(b)):	EN 301 489-1 V2.1.1 EN 301 489-3 V2.1.1 (Final draft)
Radio Spectrum (Regulation 6.2):	EN 300 330 V2.1.1

Signed for and on behalf of:

Shizuoka, Japan	September 8, 2021	Tomohiro Yaguchi
Place of Issue:	Date of Issue:	Tomohiro Yaguchi Section chief Engineering Department

Declaration of Conformity

We herewith declare that the following named machine, based on its conception and design, and in the form brought into service is in accordance with the relevant, basic safety and health requirements of the following EU directives. In case of any alteration of the machine not coordinated with us, this certificate loses its validity.

Designation of the machine	Compact Excavator
Manufacturer	TAKEUCHI MFG. CO., LTD 205 Uwadaira, Sakaki-machi, Hanishina-gun, Nagano 389-0605, Japan

Model	TB257FR <S/N 158400007~>
Engine type	V2403-CR-T-EW05 (e1*2016/1628*2022/992EV4/D*0028*Δ)
Engine performance	39 kW @ 2200 rpm

The machine is in accordance with the requirements of EU directives:

1) Machinery Directive 2006/42/EC and appendix
2) Electromagnetic Compatibility-Regulation 2014/30/EU and appendix.
3) Noise Directive 2000/14/EC (Evaluation procedure according to appendix VI), 2005/88/EC and appendices.
4) Regulations on engine emissions: Regulation (EU) 2016/1628, as last amended by Regulation (EU) 2020/1040.

Harmonized norms: EN474-1:2022, EN474-5:2022

Compiler of the technical files:
Khalil Benmahrouz
Takeuchi France S.A.S.
Parc d'Activités des Béthunes
3, avenue de la Mare 95310 SAINT OUEN L'AUMONE,
CS 29258 – SOA

Issued in Sakaki, Japan
Toshiya Takeuchi, President

Declaration of Conformity

We herewith declare that we take full responsibility that the following named machine, based on its conception and design, and in the form brought into service is compliant with the relevant, basic safety and health requirements of the following (UK) enactments. In case of any alteration of the machine not coordinated with us, this certificate loses its validity.

Designation of the machine	Compact Excavator
Manufacturer	TAKEUCHI MFG. CO., LTD 205 Uwadaira, Sakaki-machi, Hanishina-gun, Nagano 389-0605, Japan

Model	TB257FR <S/N 158400007~>
Engine type	V2403-CR-T-EW05 (e1*2016/1628*2022/992EV4/D*0028*Δ)
Engine performance	39 kW @ 2200 rpm

The machine is compliant with the following UK enactments:

1) Supply of Machinery (Safety) Regulations 2008 (S.I. 2008/1597)
2) Electromagnetic Compatibility Regulations 2016 (S.I. 2016/1091)
3) Noise Emission in the Environment by Equipment for use Outdoors Regulations 2001 (S.I. 2001/1701)

And the Designated Standards referred to and adopted therein and particularly EN474-1:2022, EN474-5:2022

Compiler of the technical files:
Jonathan Riley (Product Manager)
TAKEUCHI MFG. (UK) Ltd.
Unit E2B, John Boyd Dunlop Drive
Kingsway Business Park Rochdale OL16 4NG

Issued in Sakaki, Japan
Toshiya Takeuchi, President

 **WARNING:** Breathing diesel engine exhaust exposes you to chemicals known to the State of California to cause cancer and birth defects or other reproductive harm.

- Always start and operate the engine in a well-ventilated area.
- If in an enclosed area, vent the exhaust to the outside.
- Do not modify or tamper with the exhaust system.
- Do not idle the engine except as necessary.

For more information go to www.P65warnings.ca.gov/diesel.



WARNING:

Cancer and Reproductive Harm –
www.P65Warnings.ca.gov

