OPERATOR'S MANUAL

Original instructions

TB285 Serial No. 185000759~

TB290 Serial No. 190000821~

Book No. AM1EN018

OENTB285_G-XS

HYDRAULIC EXCAVATOR

TAKEUCHI

WARNING Read and understand these instructions.
Failure to do so can cause injury or death.

SAFETY ALERT SYMBOL



This symbol represents the safety alert. The message that follows the symbol contains important information about safety.
Read and understand the message to avoid personal injury or death.

It is the owner or employer's responsibility to fully instruct each operator in the proper and safe operation of all equipment. All persons using this machine should thoroughly familiarize themselves with the contents of this manual.

All operators must be instructed on the proper functions of the excavator before running the machine.

Learn and practice correct use of the machine controls in a safe, clear area before operating this machine on a job site.

⚠ WARNING

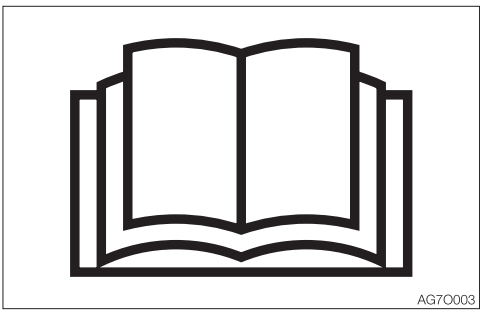

Improper operation, inspection and maintenance of this machine can cause injury or death.
Read and understand this manual before performing any operation, inspection or maintenance on this machine.

Always store this manual near at hand preferably on the machine itself. If it should be lost or damaged, immediately order a new one from your Takeuchi dealer.
When transferring ownership of this machine, be sure to hand this manual to the next owner.

Takeuchi supplies machines complying with the local regulations and standards of the country of export. If your machine has been purchased in another country or from a person or company of another country, it may not have the safety devices or safety standards required for use in your country. Should you have any question about whether your machine complies with the regulations and standards of your country, contact a Takeuchi dealer.

SIGNAL WORDS

Safety messages appearing in this manual and on machine decals are identified by the words “DANGER”, “WARNING” and “CAUTION”. These signal words mean the following:

⚠ DANGER

DANGER indicates a hazard with a high level of risk which, if not avoided, will result in death or serious injury.

⚠ WARNING

WARNING indicates a hazard with a medium level of risk which, if not avoided, could result in death or serious injury.

⚠ CAUTION

CAUTION indicates a hazard with a low level of risk which, if not avoided, could result in minor moderate injury.

IMPORTANT: The word IMPORTANT is used to alert operators and maintenance personnel about situations which could result in damage to the machine and its components.

It is impossible to foresee every possible circumstance that might involve a potential hazard. The warnings in this manual or on the machine can not cover all possible contingencies. You must exercise all due care and follow normal safety procedures when operating the machine so as to ensure that no damage occurs to the machine, its operators or other persons.

INTRODUCTION

FOREWORD

This manual describes operation, inspection and maintenance of the machine, as well as safety instructions to be heeded during these operations.
If you have any questions about the machine, please contact a Takeuchi sales or service outlet.

- Some details in this manual may differ from those provided in the machine you are using.
- Please note that the information and specifications in this manual are subject to change without prior notice.

MANUAL STORAGE COMPARTMENT

A compartment for storing this manual is provided at the position shown on the diagram below.

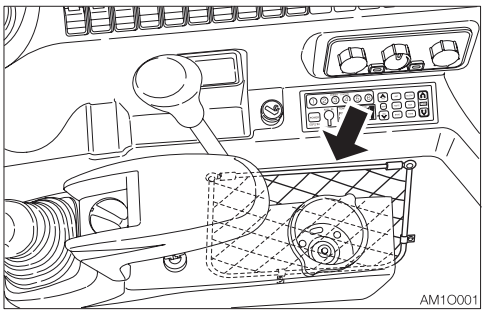

1. After using the manual, place it in the plastic pouch and store it back in the manual storage compartment.

SERIAL NUMBERS

IMPORTANT: Do not remove the machine name plate with the serial number. Check the serial numbers of the machine and engine and write them down in the spaces below.

Machine number:

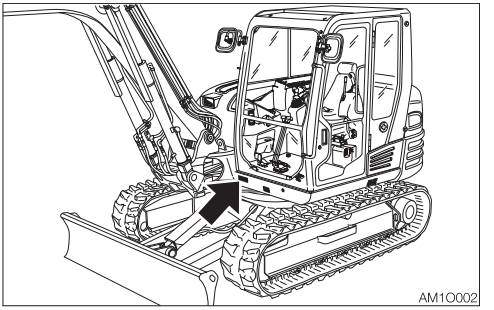

Engine number:

<TB285>

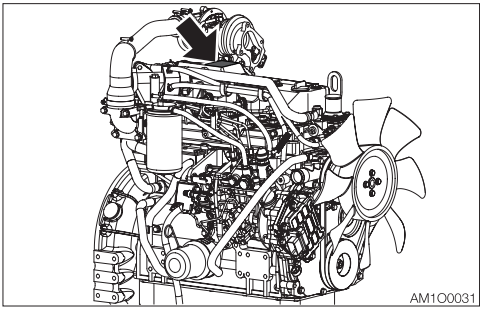

<TB290>

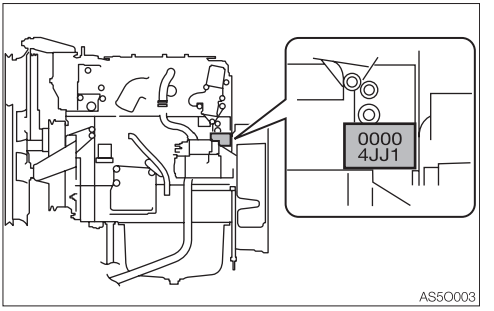

MACHINE DESCRIPTION

FRONT, REAR, LEFT AND RIGHT

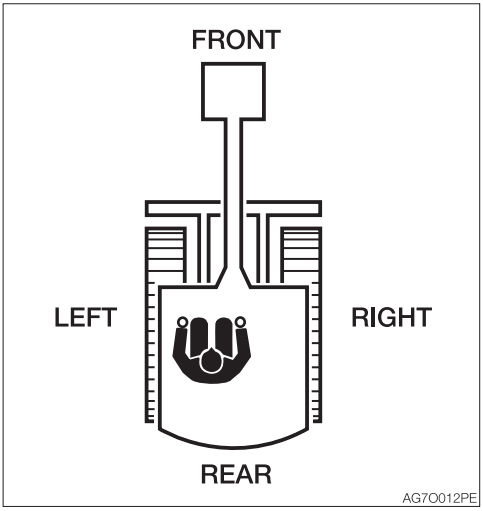

This manual refers the front, rear, left and right of the machine as seen when sitting in the operator's seat with the dozer blade visible to the front.

DESIGNATED OPERATIONS

Use this machine primarily for the following operations:
- Excavation
- Digging ditches
- Digging side ditches
- Leveling
- Loading

FEATURES

- Hydromounted cab minimizes vibration
- Automatic travel shift-down system
- Self-adjusting shoe tension system
- Short pitch rubber crawler
- Low engine noise and exhaust emissions
- Electronic control of auxiliary hydraulic circuit
- Automatic and manual operation for engine deceleration
- Engine emergency stop system

BREAK-IN PERIOD

When the machine is new, operate the machine for the first 100 hours (as indicated on the hour meter) by following the instructions below.
Using a new machine without a break-in period will lead to quicker deterioration of machine performance and may shorten the machine's service life.
- Sufficiently warm up the engine and hydraulic oil.
- Avoid heavy loads and rapid operations. Operate with a load of about 80% the maximum load.
- Do not abruptly start up, accelerate, change directions, or stop unless necessary.

NOTES ON READING THIS MANUAL

Please note that the descriptions and diagrams included in this manual may not be applicable to your machine.
The numbers used in the illustration are with circles around them. The same numbers appear between the parentheses in the text.
(Example: ① → (1))

Symbols used in this manual
The symbols used in this manual have the following meanings.
⃠, ✕ ..... Prohibition
..... Lock
..... Unlock

CONTENTS

Introduction 0-2

Machine description 0-3

Safety 1-1

General precautions 1-2
Precautions when preparing 1-8
Precautions when starting 1-10
Precautions when operating 1-12
Precautions when stopping 1-21
Precautions when transporting 1-22
Precautions on maintenance 1-24
Safety signs (decals) 1-33

Controls 2-1

Names of components 2-2
Covers 2-4
- Starter key 2-4
- Side cover 2-4
- Fuel lid 2-5
- Fuel filler port 2-5
- Engine hood 2-6
- Fuse box cover 2-6

Cab 2-7
- Cab door 2-7
- Emergency exit 2-7
- Front window 2-8
- Lower front window 2-9
- Side window 2-9
- Emergency hammer (optional) 2-9

Seat and seat belt 2-10
- Seat 2-10
- Seat belt 2-11
- Air Suspension Seat 2-12

Instrument cluster 2-16
- Warning lamps 2-16
- Indicators 2-17
- Meters 2-17

Switches 2-24
- Starter switch 2-24
- Engine shutdown switch 2-24
- Throttle controller 2-24
- Horn button 2-25
- Deceleration button 2-25
- Travel speed button 2-25
- Auxiliary 1st switches 2-26
- Auxiliary 2nd/4th switch 2-26
- Swing/Second boom select button 2-27
- Third auxiliary hydraulic button 2-27
- Auxiliary 2/4 select button 2-27
- Third auxiliary hard-lock switch (If equipped) 2-27
- Wiper switch 2-28
- Washer switch 2-28
- Automatic deceleration switch 2-28
- ECO mode switch 2-29
- Highland mode switch 2-29
- Auxiliary 1st flow rate select switch 2-29
- Detent mode switch (Auxiliary 1st) 2-29
- Light switch 2-30
- Lift overload warning switch 2-30
- Beacon lamp switch 2-30
- Auxiliary 1st auto tank switch (If equipped) 2-31

Levers and Pedals 2-32
- Safety lock lever 2-32
- Operating levers 2-32
- Blade lever 2-33
- Travel levers/pedals 2-34
- Boom swing pedal 2-34

Accessories 2-35
- Air conditioner 2-35
- Cup holder 2-40
- Cigarette lighter 2-41
- Ashtray 2-41
- Interior light 2-42
- Mirrors 2-42
- External power sockets 2-42
- Radio (preset buttons on the left) 2-44
- Radio (preset buttons on the right) 2-48
- Auxiliary hydraulic lines 2-48
- Operating the machine with an accumulator 2-57
- Load safety device (If equipped) 2-58
- Overload warning device 2-59
- Fuel Supply Pump 2-60

Operation 3-1

Before starting operation 3-2
- Getting on or off the machine 3-2
- Walk-around inspection 3-2
- Daily inspection 3-2

Starting and stopping the engine 3-3
- Before starting the engine 3-3
- Starting the Engine 3-4
- Warming up the engine 3-5
- Stopping the engine 3-5

Operating the machine 3-6
- Lever pattern (ISO pattern) 3-6

Lever pattern (G pattern) (If equipped).. 3-7
Warming up the machine (hydraulic oil) 3-8
Inspection after warm-up 3-9
Operating the travel levers/pedals 3-10
Stopping travel 3-13
Operating the working equipment 3-14
Operating procedures 3-16
Prohibited operations 3-16
Cautions on operating 3-19
Cautions on traveling on slopes 3-20
Getting out of mud 3-22
Operations possible with this machine 3-22
Parking the machine 3-24
Parking 3-24
Inspection and checks after stopping the engine 3-24
Handling in cold climates 3-25
Preparing for cold climates 3-25
Cautions after operations 3-25
After the cold climate 3-25
Handling rubber crawlers 3-26
Prohibitions 3-26
Cautions 3-27
Preventing the rubber crawlers from coming off 3-27

Transport 4-1

Loading and unloading 4-2
Hoisting the machine 4-4
Securing the machine 4-6

Maintenance 5-1

General 5-2
Maintenance overview 5-2
Cautions on maintenance 5-2
Service data 5-4
Fuel and lubricant table 5-4
Regularly replace the hydraulic oil 5-6
List of consumables 5-7
List of tools (If equipped) 5-8
List of tightening torques 5-9
Safety-critical parts 5-10
Maintenance list <TB285> 5-12
Maintenance list <TB290> 5-14
Walk-around inspection 5-16
Inspecting by opening the engine hood and covers 5-16
Inspecting by walking around the machine 5-17
Inspecting while sitting in the operator's seat 5-17
Daily inspection (every 10 hours) 5-18
Inspecting and replenishing the coolant 5-18
Inspecting and replenishing the engine oil 5-19
Inspecting the water separator and the fuel filters 5-20
Inspecting the fuel level 5-21
Inspecting the hydraulic oil tank level and replenishing 5-22
Lubricating the working equipment 5-23
After the initial 50 hours (only for new machines) 5-24
Inspecting and adjusting the fan belt.. 5-24
Inspecting and adjusting the compressor belt (AC) 5-26
Every 50 hours 5-28
Inspecting the crawler belt tension 5-28
Lubricating the slew bearing 5-30
Draining the water from the fuel tank.. 5-31
Inspecting the battery fluid level and replenishing 5-32
After the initial 250 hours (only for new machines) 5-34
Replacing the hydraulic oil return filter 5-34
Replacing the pilot line filter 5-35
Replacing the travel motor gear oil 5-36
Every 250 hours 5-37
Inspecting and adjusting the fan belt.. 5-37
Inspecting and adjusting the compressor belt (AC) 5-37
Replacing the engine oil and the oil filter 5-38
Cleaning the air cleaner 5-40
Cleaning the radiator fins and the oil cooler fins 5-41
Cleaning the air filters (air conditioner) 5-42
Cleaning the condenser (AC) 5-43
Inspecting the refrigerant (gas) level (AC) 5-44
Every 500 hours 5-46
Replacing the fuel filter 5-46
Replacing the water separator filter (If equipped with filter for high sulfur fuel) <TB285> 5-47
Cleaning the feed pump filter <TB290> 5-48

Inspecting and cleaning the supply pump strainer <TB290> 5-49
Inspecting the slew pinion gear 5-50
Every 1000 hours 5-51
Replacing the hydraulic oil return filter 5-51
Replacing the pilot line filter 5-51
Replacing the travel motor gear oil 5-51
Cleaning the engine cooling system <TB290> 5-51
Replacing the air cleaner element 5-53
Replacing the air breather filter 5-54
Inspecting and adjusting the engine valve clearance 5-54
Inspecting the engine compression pressure <TB290> 5-54
Inspecting and cleaning the engine starter and the alternator <TB290> 5-54
Every 1500 hours 5-55
Inspecting, cleaning and checking operation of the engine fuel injectors <TB285> 5-55
Inspecting the crankcase breather system <TB285> 5-55
Cleaning the EGR cooler (cleaning the water side and exhaust air passage blower) 5-55
Inspecting the turbocharger (blow wash as necessary) <TB290> .. 5-55
Inspecting and cleaning the EGR valve <TB290> 5-55
Cleaning the EGR lead valve <TB290> 5-55
Every 2000 hours 5-56
Cleaning the engine cooling system <TB285> 5-56
Lapping the engine valve seats (if necessary) <TB285> 5-56
Every 3000 hours 5-56
Inspecting the turbocharger (blow wash as necessary) <TB285> .. 5-56
Inspecting, cleaning and checking operation of the EGR valve <TB285>. 5-56
Cleaning the EGR lead valve <TB285> 5-56
Every 4000 hours 5-57
Replacing the hydraulic oil and cleaning the suction strainer 5-57
When required 5-61
Replacing the bucket teeth and the side cutters 5-61
Replacing the bucket 5-63
Adjusting the gap between the bucket and arm (If equipped) 5-65
Inspecting and replenishing the windshield washer fluid 5-66
Draining the water from the water separator 5-66
Lubricating the levers and pedals 5-67
Inspecting the rubber crawlers 5-68
Replacing the rubber crawlers 5-69
Every 2 years 5-71
Replacing the receiver dryer 5-71
Maintenance during extended storage period 5-72

Troubleshooting 6-1

Symptoms that are not malfunctions 6-2
If the engine overheats 6-3
If the battery goes dead 6-4
If a fuse blows 6-6
Inspecting and replacing the fuse 6-6
Inspecting the fusible link 6-7
Restarting after adding fuel 6-8
Bleeding air from the fuel system 6-8
If a warning lamp flashes 6-10
Vehicle error code list 6-12
Engine error code list 6-14
Other symptoms 6-18
Lowering the boom to the ground 6-21
Towing 6-22
If the cab or canopy is damaged 6-23

Specifications 7-1

Basic Specifications 7-2
Machine dimensions 7-4
Operating ranges 7-8
Lifting Capacities 7-13

Options 8-1

General precautions 8-2
Safety precautions 8-2
Cautions when installing attachments .. 8-2
Cautions when operating attachments. 8-3
Attachment combination table 8-4
Selecting a lever pattern 8-5
Switching the lever pattern 8-5
Hydraulic breaker 8-6
Cautions on operating 8-6
Replacing the hydraulic oil regularly 8-7
Travel alarm 8-8

Optional equipment mass 8-9
Biodegradable oil..... 8-10
Replacing the mineral oil with biodegradable oil 8-10
Cab options..... 8-11
Angle dozer blade..... 8-12
Operating lever switch kit 1..... 8-13
Horn button..... 8-13
Deceleration button 8-13
Travel speed button 8-13
Auxiliary 1st switches..... 8-14
Auxiliary 2nd/4th switch..... 8-14
Auxiliary 2/4 select button..... 8-15
Swing/Second boom select button.... 8-15

SAFETY



GENERAL PRECAUTIONS

It is your responsibility to observe all pertinent laws and regulations and to follow the manufacture's instructions on machine operation, inspection and maintenance.

Virtually all accidents occur as the result of a failure to observe basic safety rules and precautions.
Most accidents can be prevented by identifying the potentially hazardous situations beforehand.
Read and understand all safety messages which describe how to prevent accidents.
Do not operate the machine until you are sure that you have gained a proper understanding of its operation, inspection and maintenance.

Observe all safety rules

- Operation, inspection and maintenance of this machine must be performed only by a trained and qualified person.
- All rules, regulations, precautions and safety procedures must be understood and followed when performing operation, inspection and maintenance of this machine.
- Do not perform any operation, inspection and maintenance of this machine when under the adverse influence of alcohol, drugs, medication, fatigue, or insufficient sleep.

When a problem is found on the machine

If any problem (noise, vibration, smell, disorder of instrument, smoke, oil leak, wrong indication of alarm or unusual indication in the instrument cluster, etc.) is detected during the operation or inspection and maintenance of the machine, immediately inform your sales or service dealer and take proper actions. Do not operate the machine until the trouble is cleared.

Operating temperature range

To maintain the performance of machine and to prevent it from early wear, observe the following operating conditions.

- Do not operate the machine if the ambient temperature is higher than +45°C (+113°F) or lower than –15°C (+5°F).
  - If operated at an ambient temperature of higher than +45°C (+113°F), the engine may overheat and cause the engine oil to degrade. Also, the hydraulic oil may become very hot, causing damage to the hydraulic equipment.
  - If operated at an ambient temperature of lower than –15°C (+5°F), the parts made of rubber such as gaskets may get hardened to cause an early wear or damage to the machine.
  - If the machine is to be used outside the ambient temperature range described above, consult your sales or a service dealer.

Wear appropriate clothing and protective equipment

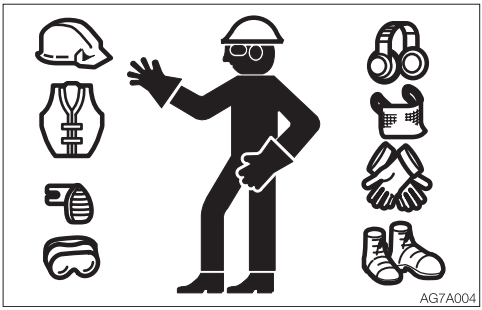

- Do not wear loose clothing or any accessory that can catch on controls or in moving parts.
- Do not wear oily or fuel stained clothing that can easily catch fire.
- Wear a hard hat, safety shoes, safety glasses, filter mask, heavy gloves, ear protection and other protective equipment as required by job conditions. Wear required appropriate equipment such as safety glasses and filter mask when using grinders, hammers or compressed air, as metal fragments or other objects can fly and cause serious injury.
- Use hearing protection when operating the machine. Loud prolonged noise can cause hearing impairments, even the total loss of hearing.

Install a fire extinguisher and first aid kit

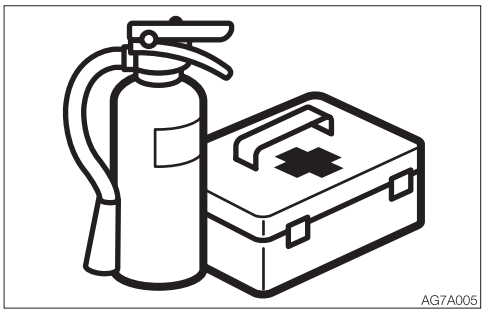

Be prepared for fire and accidents

- Install an extinguisher and a first aid kit, and learn how to use them.
- Lean how to fight a fire and how to deal with accidents.
- Know how to contact emergency assistance and make a list of emergency contacts.

Never remove safety equipment

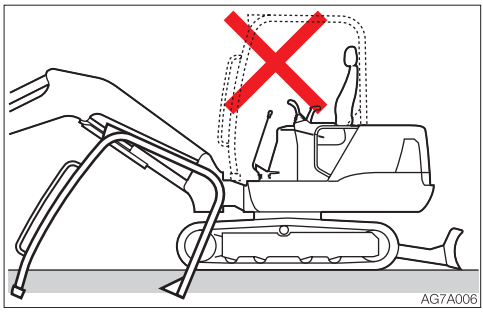

- Make sure all protective guards, covers and doors are in place and secured. Repair or replace damaged parts before operating the machine.
- Know how to use the safety lock lever, seat belt and other safety equipment and use them properly.
- Never remove any safety equipment except for servicing. Keep all safety equipment in good operating condition.

Use a signal person and a flag person

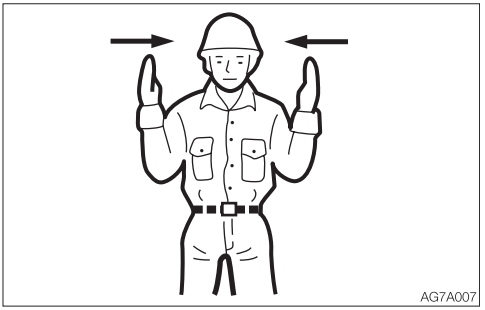

Learn how to use the hand signals required for particular jobs and make sure who has the responsibility for signaling.

- All personnel must fully understand all the signals.
- The operator must respond to signals only from the appointed signal person, but must obey a stop signal at any time from anyone.
- The signal person must stand in a clearly visible location when giving signals.

Cautions when standing up from or leaving the operator's seat

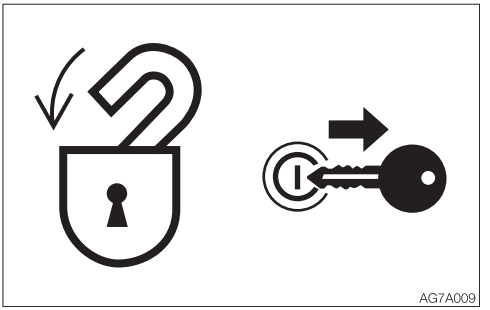

- Before standing up from the operator's seat to open/close the window or remove/install the lower window, lower the working equipment to the ground, raise the safety lock lever to engage the lock and stop the engine. If any controls should be accidentally touched when the safety lock lever is lowered (unlocked), the machine will suddenly move and cause serious injury or death.
- Be careful not to touch the operating levers when raising or lowering the safety lock lever.
- Before leaving the operator's seat, lower the working equipment to the ground, raise the safety lock lever to engage the lock and stop the engine. Also, be sure to remove the key, lock the door and covers, take it with you and store it in a specified place.

Avoid fire and explosion hazards



Keep flames away from fuel, oil, grease and antifreeze. Fuel is particularly flammable and dangerous.

- When handling these combustible materials, keep lit cigarettes, matches, lighters and other flames or sources of flames away.
- Do not smoke or permit open flames while handling fuel or working on the fuel system.
- Do not leave the location while refilling with fuel or oil.
- Never remove the fuel cap or add fuel when the engine is running or still hot. Also, do not spill the fuel on the hot surface of the machine or the component of the electric system.
- Clean up spilled fuel or oil immediately.
- Check for fuel, oil leak. Stop all leaks and clean the machine before operating.
- When operating with grinder or welding, move inflammables to a safe place.
- Do not cut or weld on pipes or tubes that contain flammable fluids. Clean thoroughly with nonflammable solvent before cutting or welding.
- Remove all trash or debris from the machine. Make sure that oily rags or other flammable material are not stored on the machine.
- Handle all solvents and dry chemicals (foam type fire extinguisher) according to procedures identified on manufacturer's containers. Work in a well-ventilated area.
- Never use fuel for cleaning purposes. Always use a nonflammable solvent.
- When handling the fuel, washing oil or paint, open the door and windows to ventilate thoroughly.
- Store all flammable fluids and materials in a safe and well-ventilated place.
- The short circuit of the electric system may cause the fire. Check for any loosened connections or damage to the wires every day. Retighten the loosened connector and wire clamp. Fix or change the damaged wire.
- Fire from the pipes:
  Make sure that the clamps, guards and cushions of the hoses and tubes are securely fixed. If not, hoses or tubes may be damaged due to vibration or contact with other parts during operation. This can cause the high-pressure oil to spurt out, resulting in the fire or injury.

Exhaust fumes from the engine are poisonous

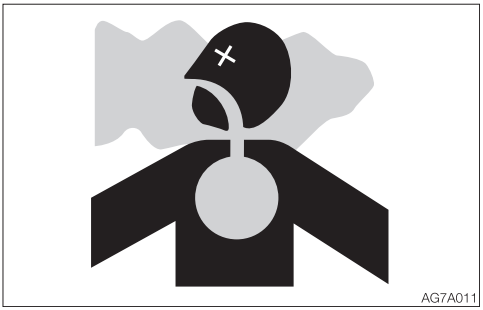

- Do not operate the engine in an enclosed area without adequate ventilation.
- If natural ventilation is not possible, install ventilators, fans, exhaust extension pipes or other venting devices.

Handling asbestos dust

Inhaling asbestos dust can cause lung cancer. When handling the materials which may contain asbestos, take the following precautions:

- Never use compressed air for cleaning.
- Avoid brushing or grinding parts containing asbestos.
- For clean up, use a vacuum equipped with a high efficiency particulate air filter (HEPA).
- Wear the stipulated respirator if there is no other way to control the dust. When working indoors, install a ventilation system with a macromolecular filter.
- Do not allow unauthorized personnel in the work area while working.
- Follow the rules and environmental standard applicable to the work area.

Be careful not to get crushed or cut



Never put your hands, feet or other parts of your body between the upperstructure and the undercarriage or tracks, between the machine body and working equipment, or between a cylinder and moving part. The sizes of these gaps change when the machine moves, and a person can suffer severe injury or death.

Using optional products

- Consult with Takeuchi before installing optional attachments. Depending on the type of attachments or the combination of them, the attachment may come into contact with the operator's compartment or the other parts of the machine. Make sure that the optional attachment installed is not contacted with other parts before use.
- Do not use attachments that have not been approved by Takeuchi. Doing so may compromise safety or adversely affect the machine's operation or service life.
- Takeuchi will not be held responsible for any injuries, accidents or damage to its products caused by the use by a non-approved attachment.

Never modify the machine

Unauthorized modifications to this machine can cause injury or death. Never make unauthorized modifications to any part of this machine.
If you modify or alter the configuration of the machine in a way which results in a restriction of the operator's field of vision, a new risk assessment will need to be performed. If this becomes necessary, contact your Takeuchi service or sales dealer.

PRECAUTIONS WHEN PREPARING

Know the work area

Before starting operation, know the working area condition to ensure safe operation.

- Inspect the topography and ground condition of the working area, or the structure of the building when working indoors, and take the safety precautions as necessary.
- Be sure to avoid all hazards and obstructions such as ditches, underground lines, trees, cliffs, overhead electrical wires, or places where there is a danger of falling rocks or slides.

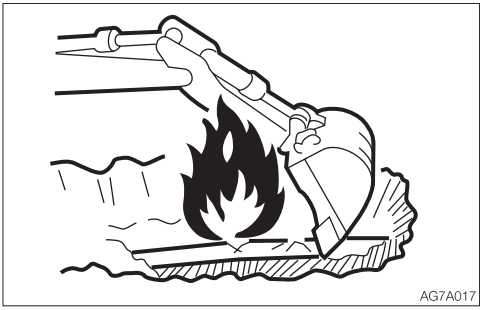
AG7A017

- Check with the administrator for the locations of buried gas pipes, water pipes and power cables. If necessary, determine what specific precautions must be taken to insure safety by consulting with the administrator.
- When working on roads, be sure to consider the safety of pedestrians and vehicles.
  - Use a flag person and/or a signal.
  - Fence off the working area and keep off unauthorized persons.
- When working in water or crossing shallow streams or creeks, check the depth of the water, the solidity of the ground and the water flow speed beforehand.
  Refer to “Cautions on operating” for further instructions.

Check the strength of the bridge

When traveling over a bridge or a structure, check the permissible load. If the strength is insufficient, reinforce the bridge or the structure.

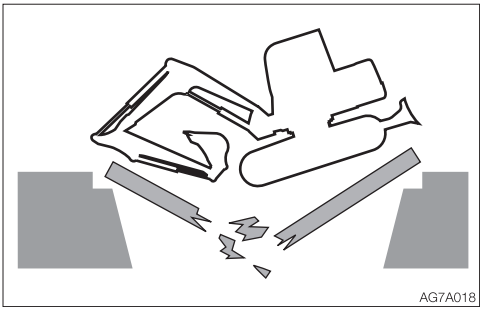
AG7A018

Always keep the machine clean

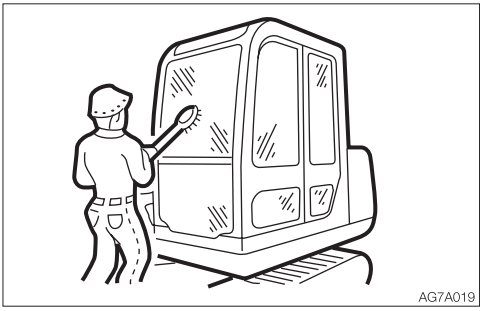
AG7A019

- Wipe off any oil, grease, mud, snow or ice, to prevent accidents due to slipping.
- Remove all loose objects and unnecessary devices from the machine.
- Remove any dirt, oil or grease from the engine area to prevent fires.
- Clean around the operator’s seat and remove any unnecessary object from the machine.

Perform inspection and maintenance every day

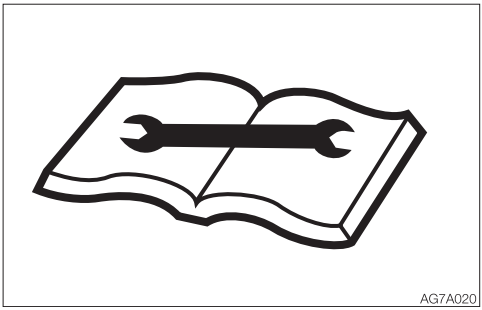

Failure to identify or repair the irregularities or damage on machine can lead to accidents.

- Before operating, perform the specified inspection and make prompt repairs where necessary.
- If a failure occurs and the operation becomes impossible or the engine fails, immediately stop the machine by following the shutdown procedure, and keep machine securely parked until the malfunction is corrected.

Cautions in the operator's compartment

- Remove mud and grease from shoe soles before entering the operator's compartment. Pedaling the machine with the shoes with mud and grease will cause a slip accident.
- Do not leave the parts or tools around the operator's seat.
- Do not leave any plastic bottles in the operator's compartment or attach any suction cups on the window glass. The plastic bottle or suction cup act as a lens and can cause fire.
- Do not use the mobile phone during traveling or working.
- Do not bring combustibles or explosives into the operator's compartment.
- After smoking, be sure to tightly close the lid of the ashtray to put out the match or cigarette.
- Do not leave the cigarette lighter in the operator's compartment. When the room temperature rises, the lighter may explore.

Emergency exit

Front window (excluding machines with a front guard)

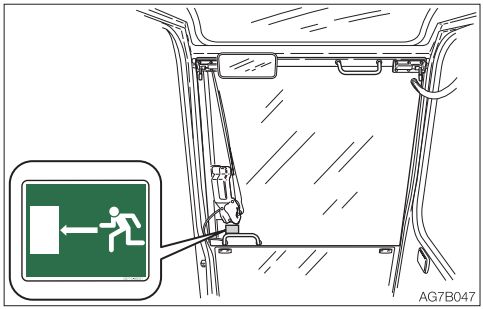

If you should become trapped inside the cab, open the front window to get out.

Emergency hammer (optional)

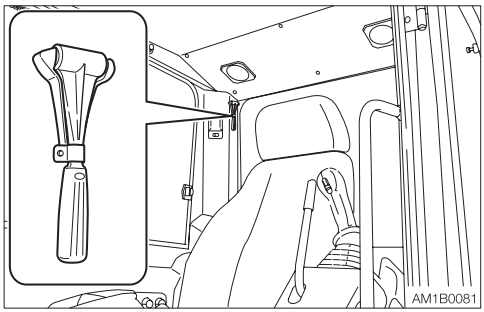

An emergency hammer is installed to be used to escape from the cab in an emergency. When escaping, break the windows with the hammer.

- When breaking the windowpane with a hammer, take great care not to injure yourself with the broken glass pieces.
- Remove the glass pieces from the window sill so as not to cut yourself when evacuating. Broken glass will fall from the window, so be careful of your footing and do not slip on the glass.

PRECAUTIONS WHEN STARTING

Support your weight in a three point secure stance when getting on/off the machine

- Do not jump on or down from the machine. Never attempt to get on or off the moving machine.
- When getting on or off the cab, first fully open the door to the locked position and check that it does not move (for machines with cab).



- Climb up/down the steps facing the machine and holding the handrail to support your weight in a three point secure stance (hand and feet).
- Never use the safety lock lever or control levers as hand holds.

Before starting the machine, ask any unauthorized personnel to leave the area

Do not start the engine until you are sure it is safe to start the machine by checking the following items.

- Walk around the machine and warn the person who is servicing the machine or is walking near the machine. Do not start the machine until you are certain that no one is around the machine.



- Check if there is a “DO NOT OPERATE” alert sign or similar sign is on the cab door, controls or starter switch. If there is one, do not start the engine or touch any levers.
- Sound the horn to warn people around the machine.

Sit in the operator’s seat and start the engine

- Adjust the seat to securely latch it.

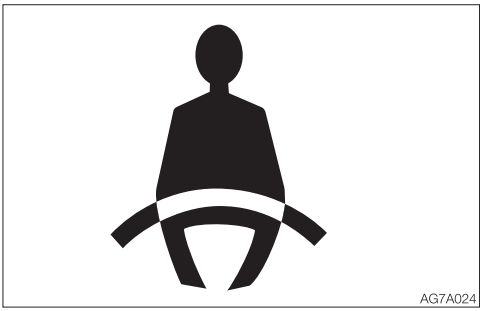

- Fasten the seat belt.
- Check if the parking brake is on and all control levers and pedals are in the neutral position.
- Check if the safety lock lever is in the lock position.
- Make sure that no one is near the machine.
- Start and operate the machine only from the operator’s seat.
- Never attempt to start the engine by shorting across the starter terminals.

Starting with jumper cables

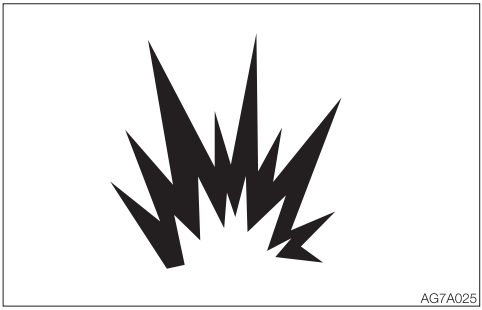

Use jumper cables only in the recommended manner. Improper use of jumper cables can result in battery explosion or unexpected machine motion.
Refer to “If the battery goes dead” for further instructions.

After starting the engine

After starting the engine, perform the operations and checks described below in a safe place with no persons or obstacles in the area. If any malfunction is found, follow the shutdown procedure and report the malfunction.

- Warm up the engine and hydraulic oil.
- Check if all gauges and warning devices are properly working.
- Check for any noises.
- Test the engine speed control.
- Operate each control to ensure they are properly working.

In cold climates

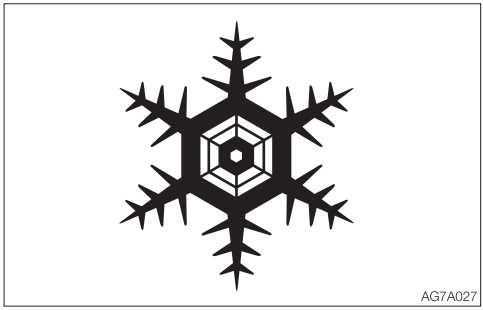

- Be careful of slippery conditions on freezing ground, steps and hand holds.
- In severe cold climates, do not touch any metal parts of the machine with bare hands. The skin will freeze to the metal, resulting in severe injury.
- Do not use ether or starting fluid on this engine. The starting fluids can cause explosion and serious injury or death.
- Warm up the engine and hydraulic oil. If the levers are operated without warming, the machine will not react or move promptly or properly, resulting in accident.

PRECAUTIONS WHEN OPERATING

Ensure good visibility

Check the field of view before operating the machine.

- When working in dark places, turn on the machine's working lights and headlights and additional lighting equipment installed, as necessary.
- When visibility is poor due to bad weather (fog, snow, rain or a cloud of dust), stop operating the machine and wait until visibility improves.
- Clean the windows, mirrors, lights and camera to ensure good visibility. Adjust the mirror and camera to the best positions so that the operator can see the rear view (blind spots) from the operator's seat.
- Unauthorized machine modifications or installation of unapproved attachments could impair the visibility. The operator's field of view must conform to ISO 5006.

Do not permit riders on the machine



Do not allow anyone to ride on any part of the machine at any time while traveling or operating.

Check if the work area is safe and secure before operation

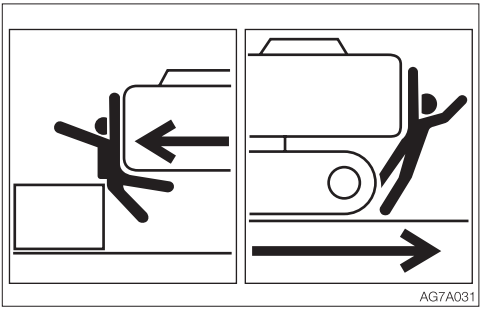

- Confirm the performance limits of the machine.
- Use a signal person at road shoulders, narrow places or where your vision is obstructed.
- Never allow anyone to enter the machine's slewing radius and path.
- Signal your intention to move by sounding the horn.
- There is a blind spot in the rear of the machine. Before traveling in reverse, check that the area is safe and clear.

Check the position of the undercarriage (tracks) before traveling

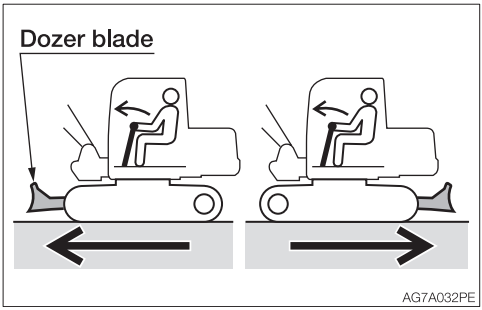

Before operating the travel levers/pedals, make sure that the dozer blade is to the front of the operator's seat. Remember that when the dozer blade is to the rear of the operator's seat, the travel levers/pedals must be operated in the reverse direction from when it is to the front.

Travel safely

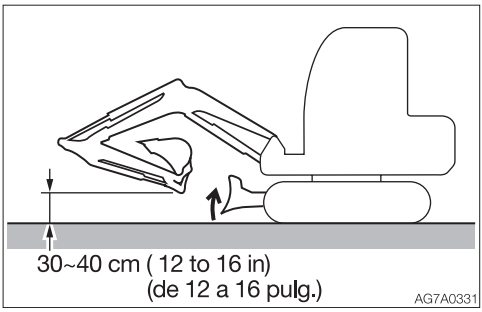

- Travel with the dozer blade raised, the hoe attachment folded as shown on the figure above, and the bucket raised 30 to 40 cm (12 to 16 in.) above the ground.
- Do not slew while traveling. If you must operate the hoe attachment while traveling, operate at speeds slow enough so you have complete control at all times.
- When a load greater than a set value is applied during traveling in 2nd (high) speed, the speed will automatically slow down to 1st (low) speed. When the load becomes lighter, the speed will increase and return to 2nd (high) speed. It should be noted that the travel speed changes depending on the load condition (for machines with the automatic travel shift-down system).
- When traveling on the uneven road or sharp slope, turn off the auto-deceleration switch. If the machine is operated on such roads with the switch turned on, the engine speed may increase, causing the machine speed to suddenly increase (machines with the auto-deceleration switch).

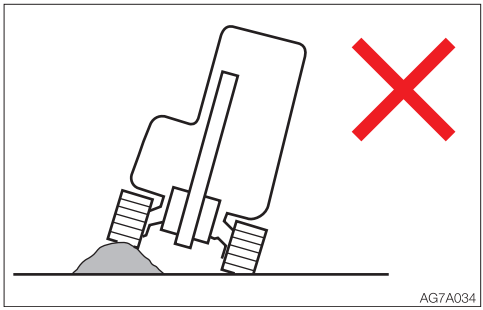

- Avoid crossing over obstacles whenever possible. If you must do so, keep the hoe attachment close to the ground level and travel slowly. Never cross obstacles which will tilt the machine to an angle of 10° or greater.
- On uneven ground, maintain the low speed and avoid starting, stopping or changing directions abruptly. Otherwise, the working equipment may come in contact with the ground, causing the machine to lose its balance and get damaged or to damage the structures in the surrounding area.

Cautions on traveling on slopes

When traveling on slopes or grades, be careful that the machine does not tip (roll) over or slide.

- Never travel on slopes that are too steep for the machine to maintain its stability (maximum gradeability: 35°, lateral tipping angle: 15°). Note that in reality, the machine's stability becomes lower than the above values depending on the working condition.

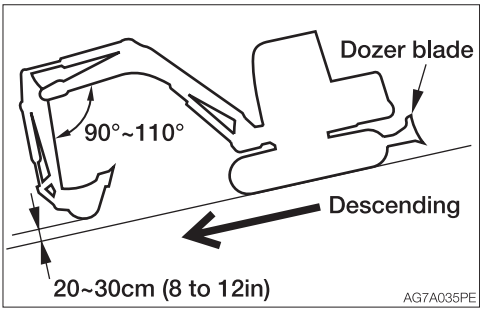

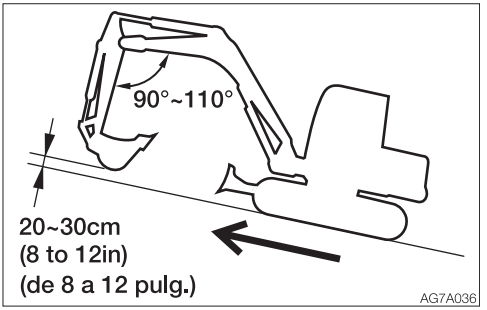

- When climbing a hill, keep the operator's seat facing the hillside. When descending a hill, keep the operator's seat facing the downhill direction. In either case, travel must be done while paying attention to the ground in front of the machine.
- When traveling on slopes, lower the bucket to a height of 20 to 30 cm (8 to 12 in.) above the ground. When climbing a steep slope, extend the hoe attachment to the front. In emergencies, lower the bucket to the ground and stop the machine.
- When traveling on slopes or grades, drive slowly in 1st (low) speed. When descending a slope, slow down the engine speed.
- Do not descend slopes in reverse.

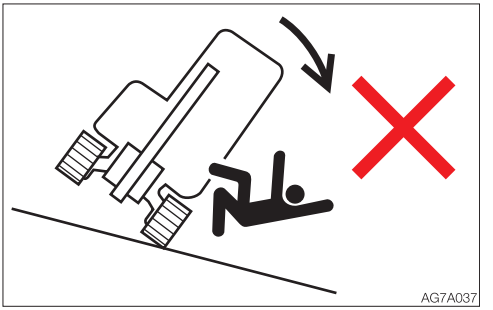

- Do not change directions on slopes or traverse slopes. First return to a flat surface, and then take an alternative path.
- The machine may slip sideways even on a slight slope if the ground is covered with grass or dead leaves, or when traveling on a wet metal plate or frozen surfaces. Make sure the machine is never positioned sideways on slopes.
- If the machine is stalled on the slope, return each operating lever to the neutral position before restarting the engine.

Operate the machine on snow or ice with extra care

- When traveling on snow or on frozen surfaces, drive at a low speed and avoid starting, stopping or changing directions abruptly.
- In the snowy area, the road shoulder and objects placed beside the road are buried in the snow and cannot be seen. There is a hazard of the machine tipping over or hitting covered objects, so always carry out operations carefully.
- If the machine enters deep snow, there is a hazard that it may tip over or become buried in the snow.
  Be careful not to drive beyond the road shoulder or to get trapped in a snow drift.
- With frozen ground surfaces, the ground becomes soft when the temperature rises, and this may cause the machine to tip over, resulting in an operator trapped inside the machine.
- When parking the machine on an unstable ground, lower the dozer blade.

Do not move the bucket over the heads of people

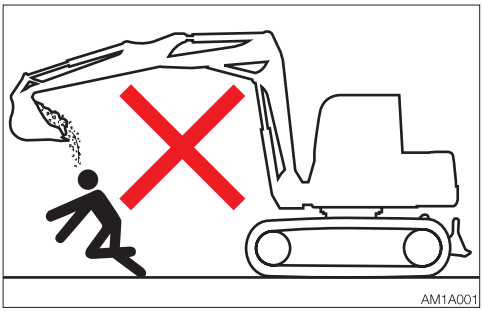

Moving the bucket over the heads of people entails the danger of the load spilling or the sudden dropping of the bucket.

Ensure driver's safety when loading

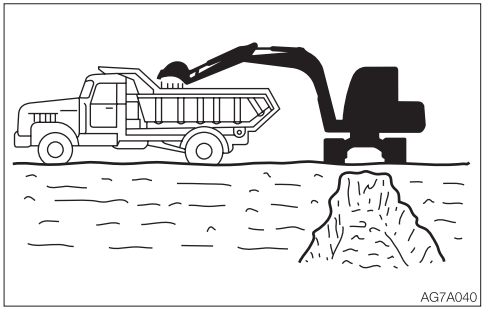

Do not load a truck unless the truck driver is in a safe place.

- Never swing or position the bucket over a person or the cab room.
- Load the truck from the rear.

Keep a safe distance from the overhead high-voltage cables

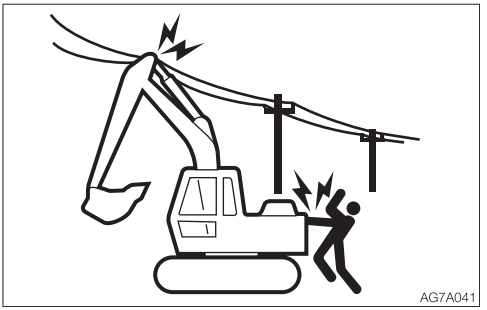

Never bring any part of the machine or loaded material to near to the high voltage cables unless all safety precautions required by the local and national authorities have been installed. If a person comes near to the machine that is discharging sparks or located near to or in contact with the power source, there is a hazard of electric shock and death.

- Always maintain a safe distance between the machine and the high-voltage electric cable.
- Check with the local power company about safe operating procedure before starting operations.
- Consider all cables to be high-voltage cables and treat all cables as energized even though it is known or believed that the power is shut off and the cables are visibly grounded.
- Use a signal person to give warning if the machine approaches too close to the high-voltage electric cables.
- Caution all personnel in the work area not to come close to the machine or the loaded material.

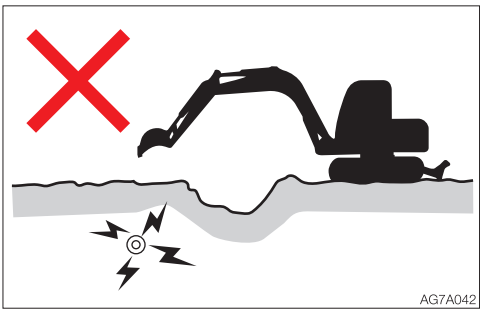

- Pay also careful attention to the high-voltage electric cables buried underground.

Watch out for hazardous working conditions

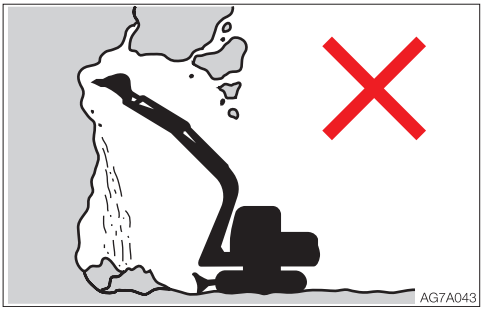

- Never undercut a high bank. Doing so is dangerous as it may cause ground collapse.
- Do not operate in places where there is a danger of falling rocks.



- Maintain a safe distance between the machine and the edge of the digging site. Do not dig the ground under the front of the machine.
- When working close to the cliffs or road shoulders, to make it easier to escape if there is any problem, set the crawlers at right angles to the cliff or road shoulder and the dozer blade to the front when carrying out operations.

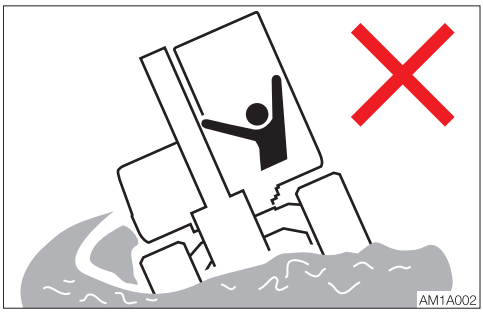

- Do not enter areas where there is soft ground. Doing so could cause the machine to tilt under its own weight, resulting in a machine tipping over or sinking into the ground.

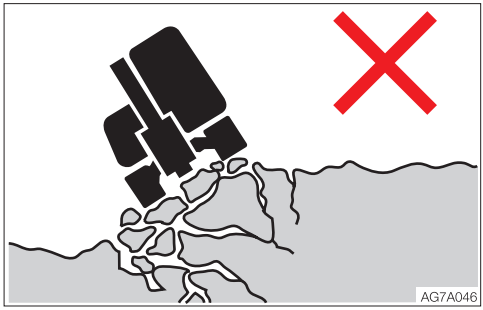

- Do not come close to unstable grounds (cliffs, road shoulders, deep ditches). If the ground should collapse under the weight or vibration of the machine, there is a hazard that the machine may fall or tip over.
  - Remember that the soil after heavy rain or blasting is weak.
  - The ground of top of the embankment and of the circumferences of the excavated ditches are also weak.

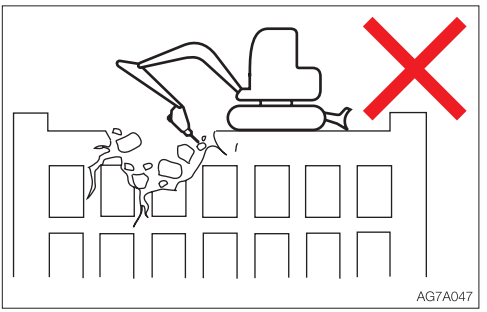

- Do not perform demolition work under the machine. There is a hazard that the machine may fall down, because the ground becomes unstable.
- When working on or from the top of buildings or other structures, check the strength and the structure before starting operations. If a building or structure collapses, serious injury or damage will result.

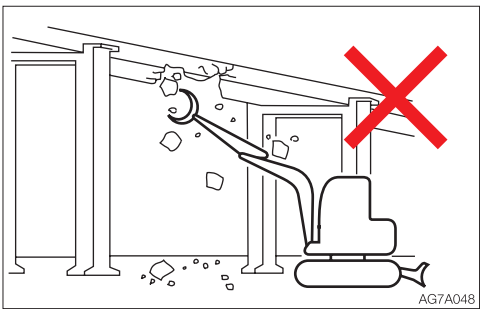

- When doing demolition work, do not perform demolition above your head. There is a hazard of broken parts falling or of the building collapsing and causing serious injury or damage.

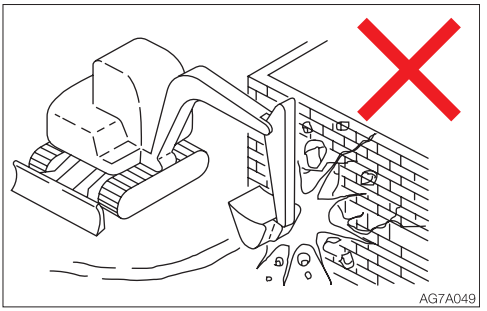

- Do not use the impact force of the hoe attachment for breaking work. There is a hazard of serious injury being caused by flying pieces of broken materials and by the damaged hoe attachment.

Be careful with flying objects

This machine is not equipped with protective equipment to protect the operator from flying objects. Do not use this machine in places where there are risks of the operator being hit by flying objects.

Operating on slopes is dangerous

When operating on slopes or grades, slewing or operation of working equipment may cause the machine to lose stability and tip over. Avoid operating on slopes whenever possible.

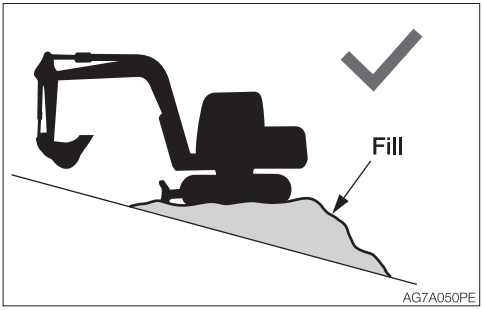

- Level off the work area.

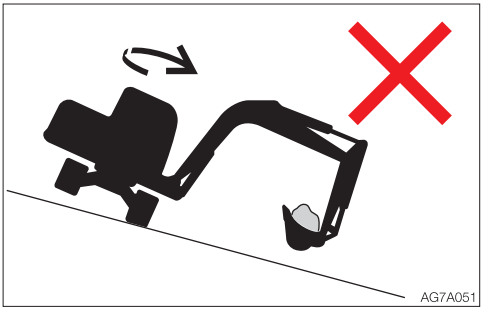

- Avoid slewing to the downhill direction with the bucket full of loaded material. This will reduce the stability of the machine and may result in tipping over.

Never slew (swing) sideways with a heavy load

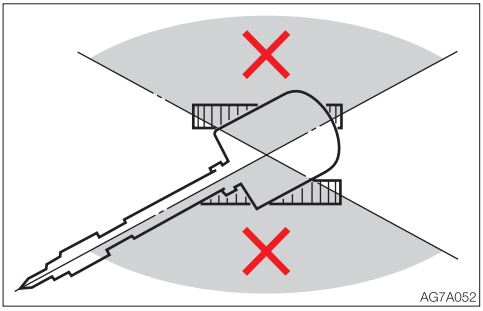

The machine can tip over more easily in the lateral direction than in the longitudinal direction.

- Do not slew (swing) sideways with a heavy load at the tip of the hoe attachment. In particular, do not slew (swing) sideways on slopes.
- The tip of the attachment is heavier for machines equipped with breakers, crushers or long arms than for machines equipped with the standard bucket. For such machines with heavier tips, do not perform excavation with the digging arm (boom) facing the downhill direction or operate toward sideways.

Be careful with the overhead objects

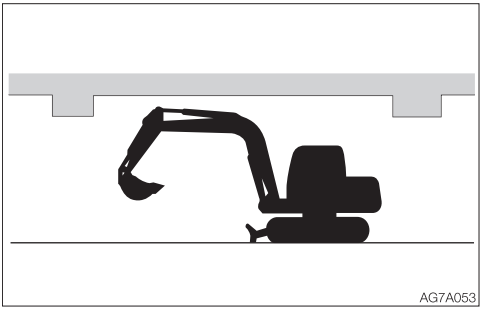

When operating under bridges, in tunnels, near electric cables or indoors, be careful not to let the boom or arm hit overhead objects.

Excavators are not designed for lifting loads

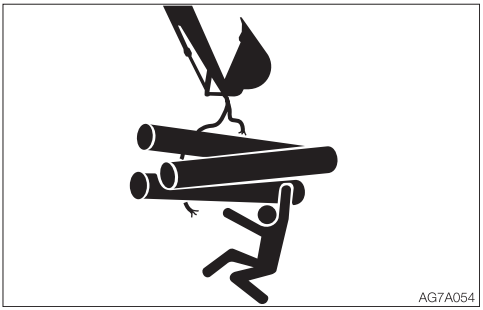

This machine is specifically designed for excavation work. Therefore, it has no safety equipment for crane operation. Extreme caution should be paid if the excavator is used for lifting.

- Never lift loads in excess of capacity. Overload will cause the machine to roll and can result in serious injury or death.
- All rated lift capacities are determined by using a machine placed on a stable and flat ground. For a safe lifting work, the user is expected to make due allowance for the particular job conditions. They include, soft or uneven ground, non-level condition, side loads, dynamic or jerked loads, hazardous conditions, and experience of personnel. The operator and other personnel should fully acquaint themselves with the operator's manual before operating this machine, and rules for safe operation of equipment shall be adhered to at all times.
- The bucket linkage or lifting device may fail if chains or lifting device are incorrectly attached, resulting in serious injury or death.
- Do not attempt to pull stumps out of the ground when using the machine as a crane. The loads imposed on the machine under this use are completely unknown.
- Do not allow anyone to stand on or under the lifted loads or come close to the work area.

Cautions when towing

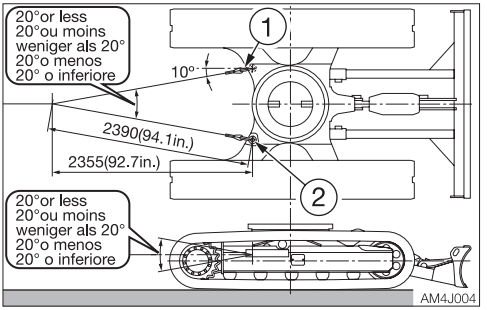

When towing, serious injury or death could result, if performed incorrectly or the wire rope being used is inappropriate or not properly inspected.

- Do not tow using only a towing hole on one side.
- It becomes dangerous if the wire rope breaks or becomes disengaged. Use a wire rope appropriate for the required tractive force.
- Do not use a wire rope that is kinked, twisted or otherwise damaged.
- Do not apply heavy loads abruptly to the wire rope.
- Wear safety gloves when handling the wire rope.
- Make sure there is an operator on the machine being towed as well as on the machine that is towing.
- Never tow on slopes.
- Do not let anyone come near to the wire rope while towing.

Refer to "Towing" for further instructions.

PRECAUTIONS WHEN STOPPING

Park safely

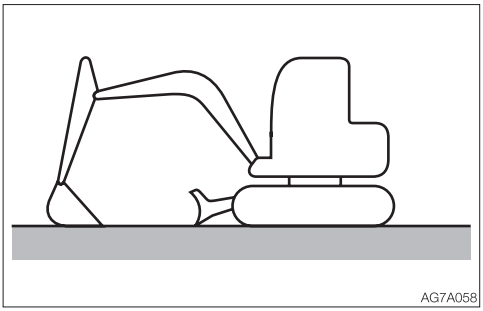

- Park the machine on a flat, rigid and safe ground. Set the parking brake.

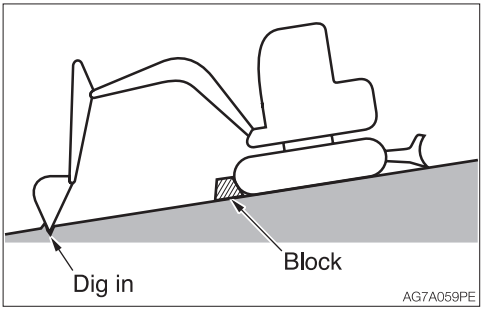

If you must park on a slope or incline, park the machine securely and block the movement of the machine.

- When parking on a street, use barriers, caution signs, lights, etc., so that the machine can easily be seen even at night to avoid collision with other vehicles.

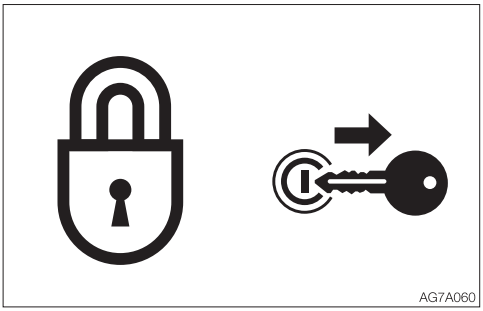

- Before leaving the machine, do the followings:
  1. Lower the bucket and the dozer blade to the ground.
  2. Raise the safety lock lever to the locked position.
  3. Stop the engine and remove the starter key.
  4. Lock the cab and covers and take the key with you.

PRECAUTIONS WHEN TRANSPORTING

Load/unload the machine safely

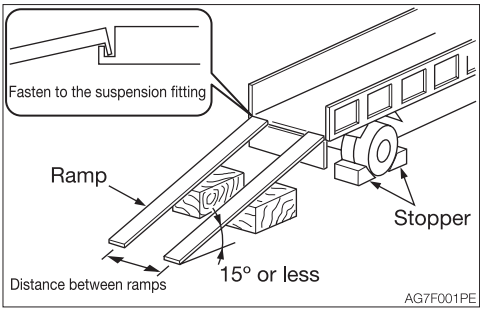

The machine may roll or tip over or fall while being loaded or unloaded. Take the following precautions:

- Select a firm, level surface and keep sufficient distance from road shoulders.
- Secure the ramps of adequate strength and size to the truck bed. The slope of the ramps must not exceed 15°. If the rumps are bowed down too low, support them with poles or blocks.
- Never use the working equipment to load or unload the machine. Doing so may result in tipping over or falling down of the machine.
- Keep the truck bed and loading ramps clean of oil, soil, ice, snow, and other materials to prevent the machine from sliding sideways. Clean the crawlers.
- Chock the transporter wheels to prevent movement.
- Turn off the deceleration switch and auto-deceleration switch. Otherwise, the engine speed may suddenly increase to cause troubles.
- When being loaded or unloaded, travel slowly in 1st (low) gear by following the signal from the signal person.
- Never change courses on the ramps.
- Do not slew/swing on the ramps. The machine may tip over.
- When slewing/swinging on the truck bed, do it slowly as the footing should be unstable.
- Lock the cab door after being loaded, if applicable. Otherwise, the door may open during transport.
- Chock the tracks and secure the machine to the truck bed with wire rope or chain.

Hoist the machine safely

- Know and use correct crane signals.
- Check the hoisting equipment for damaged or missing parts on a daily basis and replace as necessary.
- When hoisting, use a wire rope capable of lifting the machine mass.
- Hoist the machine in such a manner described in the procedure below. Do not do it in any other manner, as it may result in the machine losing its balance.
  Refer to “Hoisting the machine” for further instructions.
- Do not hoist the machine with an operator on it.
- When hoisting, hoist slowly so that the machine does not tip.
- Keep everyone out of the area when hoisting. Do not move the machine over the heads of the persons.

Transport the machine safely

- Know and follow the applicable safety rules, vehicle code and traffic laws when transporting the machine.
- Select the best transport route by considering the length, width, height and weight of the truck with the machine loaded on it.
- Never abruptly start or stop or run at a high speed at the sharp curves during transport. Doing so will move or lose the balance of the loaded machine.

PRECAUTIONS ON MAINTENANCE

Display a “DO NOT OPERATE” alert sign

Severe injury could result if an unauthorized person should start the engine or touch controls during inspection or maintenance.
- Before performing maintenance, stop the engine, remove the key and take it with you.



- Display a “DO NOT OPERATE” alert sign on easy-to-see locations such as on the starter switch or on control levers.

Use the correct tools

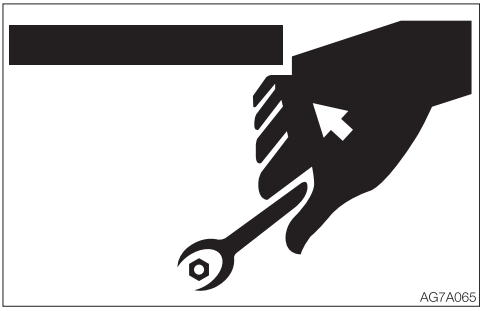

Do not use damaged or weakened tools or tools designed for other purposes. Use tools appropriate for the work involved.

Replace safety-critical parts periodically

- Replace fuel hoses periodically. Fuel hoses wear out over time, even if they do not show any symptom of wear.
- Regardless of the replacement schedule, replace immediately if a symptom of wear is found.
  Refer to “List of safety-critical parts” for further details.

Explosionproof lighting



To prevent an ignition or explosion, use explosion-proof lights when inspecting fuel, oil, coolant or battery fluid. Otherwise, explosion could result causing serious injury or death.

Prohibit access by unauthorized persons

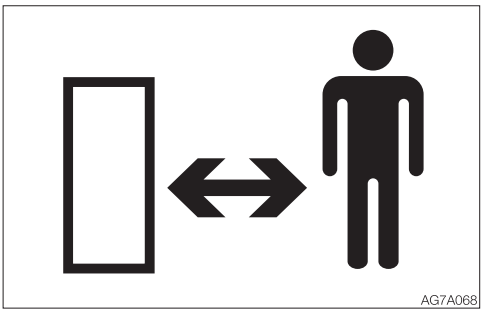

Do not allow unauthorized personnel in the work area while working. Be careful when grinding, welding or using a hammer. You could be injured by flying debris from the machine.

Prepare work area

- Select a firm, level work area. Make sure there is adequate light and, if indoors, ventilation.
- Clear obstacles and dangerous objects. Eliminate slippery areas.

Always keep the machine clean

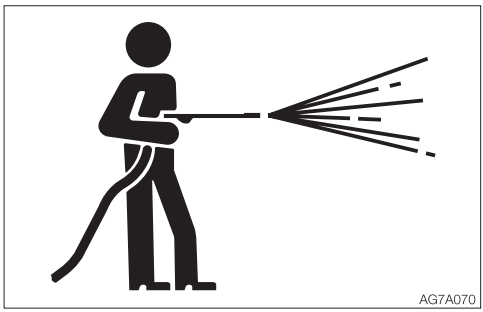

- Clean the machine before performing maintenance.
- Stop the engine before washing the machine. Cover the electrical parts so that water cannot enter. Water on electrical parts could cause short-circuits or malfunctions. Do not use water or steam to wash the battery, electronic control components, sensors, connectors or the operator's compartment.

Stop the engine before performing maintenance

- Avoid lubrication or mechanical adjustments while the machine is moving or while the engine is running when the machine is not moving.
- If maintenance must be performed with the engine running, always work as a two person team communicating each other.
  - One person must sit in the operator's seat so that he/she can immediately stop the engine when necessary. He/she must take care not to touch the lever or pedal unless necessary.
  - The one who performs maintenance must make sure to keep his/her body or clothing away from the moving part of the machine.

Stay clear of the moving parts

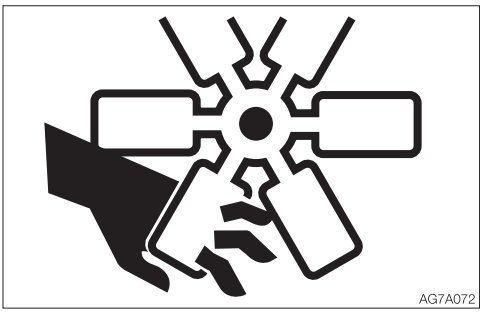

- Stay clear of all rotating and moving parts. If a hand or tool becomes trapped in the rotating or moving part, serious injury or death could result.
- If a tool or other objects is dropped or inserted in the fan or fan belt, it will be flown or cut in pieces. Do not drop or insert anything in the fan or fan belt.

Firmly secure the machine or any component that may fall



- Before performing maintenance or repairs under the machine, lower all moveable working equipment to the ground or in the lowermost position.
- Chock the tracks.
- If you must work beneath the raised machine or equipment, always use wood blocks, jack-stands or other rigid and stable supports. Never get under the machine or working equipment if they are not sufficiently supported. This procedure is especially important when working on hydraulic cylinders.

Secure the working equipment

To prevent unexpected movement, firmly secure the working equipment when repairing or replacing the bucket teeth or side cutter.

Secure the engine hood or cover when opened

Be sure to secure the engine hood or cover before working the inside. Do not keep the hood or cover open on a windy day or if the machine is parked on a slope.

Place heavy objects in a stable position



When it is necessary to temporally place a heavy object or an attachment on the ground during removal or installation, be sure to place it in a stable position. Keep unauthorized persons from the storage place for such object.

Cautions when refueling



- Do not smoke or permit open flames while fueling or near fueling operations.
- Never remove the fuel cap or add fuel when the engine is running or still hot. Do not spill fuel on the hot surface of the machine.
- Fill the fuel tank in a well ventilated place.
- Do not fill the fuel tank to capacity. Allow room for oil expansion.
- Clean up spilled fuel immediately.
- Securely tighten the fuel filler cap. If the fuel cap is lost, replace it only with the genuine cap. Use of a non-approved cap without proper venting may result in pressurization of the tank.
- Never use fuel for cleaning.
- Use the correct grade of fuel for the operating season.

Handling of hoses

Oil leak or fuel leak can cause a fire.

- Do not twist, bend or hit the hoses.
- Never use twisted, bent or cracked pipes, tubes or hoses; otherwise, they may burst.
- Retighten loose connection.

Be careful with hot and pressurized components

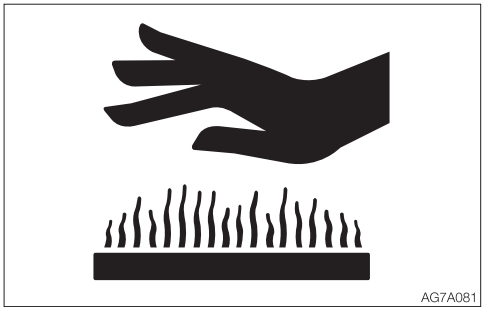

Stop the engine and allow the machine to cool down before performing maintenance.

- The engine, muffler, radiator, hydraulic lines, sliding parts and many other parts of the machine are hot immediately after the engine is stopped. Touching these parts will cause burns.
- The engine coolant, hydraulic oil and other oils are also hot and under high pressure. Be careful not to touch the hydraulic oil when loosening the cap or plug. Working on the machine under these conditions could result in burns or injuries due to the hot oil spurting out.

Be careful with hot cooling systems

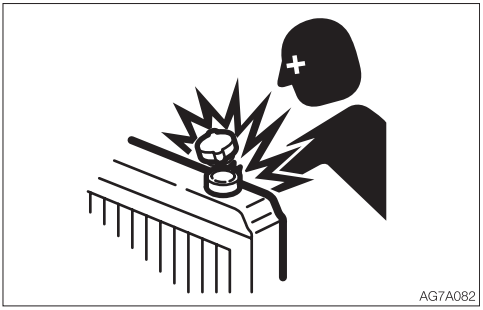

Do not remove the radiator cap or the drain plug when the cooling water is hot. Stop the engine and wait until the engine and the cooling water cool. Then, slowly loosen the radiator cap to release the internal pressure and remove it.

Be careful with oil internal pressure

Pressure is maintained in the hydraulic circuit long after the engine has been shut down.
- Completely relieve the internal pressure before performing maintenance work.

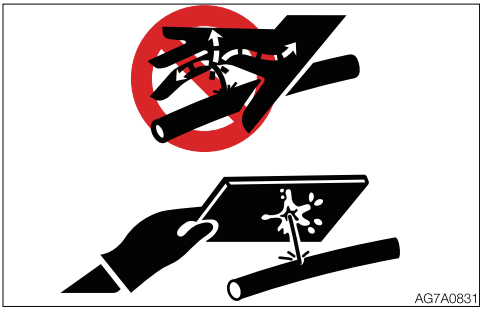

- The hydraulic oil is high enough pressure to penetrate the skin or eyes and cause serious injury, blindness or death. Remember that the hydraulic oil escaping from a small hole is almost invisible. When checking for leaks, wear protective goggle and thick gloves, and use a paperboard or plywood to keep your skin from oil spurting.
  If oil penetrates the skin, it must be surgically removed within a few hours by a doctor familiar with this type of injury.

Release pressure before working on the hydraulic system

Oil may spurt out if caps or filters are removed or pipes are disconnected before releasing the pressure in the hydraulic system.
- Immediately after the engine is stopped, and while the safety lock lever is still in the unlock position, turn the starter switch to ON and move all the control levers and pedals several times all the way in each direction to release the pressure from the working equipment circuitry.
- Press the air breather button to relieve the internal pressure from the tank.
- When removing plugs or screws, or when disconnecting hoses, stand to the side and loosen them slowly to gradually release the internal pressure before removing.
- Oil or plug may spurt out according to the pressure in the travel motor case. Loosen the plug slowly and release the internal pressure.

Be careful with debris when the hammer is being used

When using a hammer, pins may fly out or metal particles may be scattered. This may lead to serious injury.
- If hard metal parts such as pins, bucket teeth, side cutter or bearings are hit with a hammer, wear protective gear such as safety goggles and gloves.
- When hitting pins or bucket teeth, always check that there is no one in the surrounding area.

Never disassemble the track adjuster

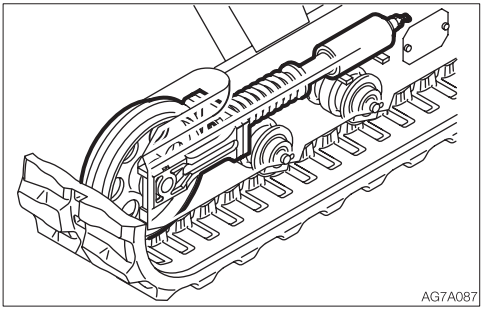

There is a very strong spring contained in the track adjuster. If the track adjuster is accidentally disassembled, the spring can pop out, resulting in serious injury Never disassemble the track adjuster.

Cautions when servicing the air conditioner

If the refrigerant comes in contact with eyes, it damages your eyesight. If the refrigerant comes in contact with skin, it may cause frostbite. Never touch the refrigerant.

Handling of the accumulator



Be sure to handle the high-pressure nitrogen gas enclosed in the accumulator with care. If handled incorrectly, it could explode and cause serious injury. Strictly observe the following precautions:

- Do not disassemble.
- Do not allow flame near or throw it into a fire.
- Do not drill, weld or fuse.
- Do not subject it to physical shock such as hitting, rolling or dropping.
- Before disposing of the unit, the sealed gas must be drained. Contact a Takeuchi service agent for help.

Disconnect the battery wiring



Disconnect the battery wiring before working on the electrical system or doing electric welding. Disconnect the negative (–) battery cable first. When reconnecting, connect the negative (–) battery cable last.

Use caution when handling batteries

- Batteries contain sulfuric acid which will damage the eyes or skin in case of contact.
  - · If eye contact occurs, flush immediately with clean water and get prompt medical attention.
  - · If accidentally swallowed, drink large quantities of water or milk and call a physician immediately.
  - · If acid contacts skin or clothing, wash off immediately with a lot of water.
- Wear protective goggle and gloves when working with batteries.
- Batteries generate flammable hydrogen gas which may explode. Keep away from flame, sparks, fire or lighted cigarettes.
- When checking the level of the battery fluid, use a flashlight.
- Be sure to stop the engine by turning off the starter switch before inspecting or handling the battery.
- Be careful not to let metal tools or any metal objects come into contact with the battery terminals and cause a short circuit.
- Loose battery terminals may result in sparks. Be sure to fasten terminals tightly.
- Make sure the battery caps are tightened securely.
- Do not charge a battery or jump-start the engine if the battery is frozen; otherwise it may explode. Warm the frozen battery to 15°C (60°F) before use.
- Do not use the battery when the fluid level is below the lower level limit. Doing so will hasten the deterioration of the internal portions of the battery and shorten the battery life. It also can cause rupturing (explosion).
- Do not add the distilled water above the upper level limit. Doing so could cause the fluid to leak. This fluid can cause skin damage if contacted, or can cause the machine components to corrode.
- Use a dampened cloth to clean around the fluid level line and check the fluid level. Do not clean with a dry cloth; otherwise it could cause static electricity to build up, resulting in ignition or explosion.

Periodically replace the safety-critical parts

- To use the machine safely for a longer period, periodically add oil and perform inspection and maintenance. To improving the safely, replace the safety-critical parts like hoses and seat belts periodically. Refer to “Safety-critical parts to be replaced periodically” for further details.
- The “Safety-critical parts to be replaced periodically” are the parts which deteriorate, wear and fatigue after repeated use and whose properties change over time. While these characters of these parts could cause serious physical or personal damage, judging the remaining life of these part are difficult from external inspection or the feeling when operating.
- Replace the “Safety-critical parts to be replaced periodically” if any defect is found from external inspection, even when they have not reached the time specified interval.

Jump starting with booster cables

- When starting the engine using the booster cables, be sure to connect the cables in the proper order described below. Wrongly connected cables can result in sparking and battery explosion.
  - Do not allow the “machine in trouble” and “rescue machine” to touch each other.
  - Do not allow the positive (+) and negative (–) clips of the booster cables to touch each other or to come in contact with the machine.
  - When connecting, attach the positive booster cable to the positive (+) terminals first. When disconnecting, remove the negative cable from the negative (–) terminal (ground) first.
  - Be sure to connect the clips securely.
  - Connect the last clip of the booster cable to a point as far away from the battery as possible.
- Always wear the protective goggle and gloves when starting the engine by using the booster cables.
- Use the booster cables and clips of a size suited to the capacity of battery. Do not use damaged or corroded booster cables and clips.
- Be sure that the battery of the “rescue machine” has the same capacity as the battery of the “machine in trouble”.

Have a Takeuchi service agent repair welding

If welding must be performed, make sure that it is done by a qualified person in a properly equipped workplace. To prevent any part from breaking down or being damaged due to overcurrent or sparks, observe the following.

- Disconnect the wiring from the battery before doing electric welding.
- Do not continuously apply 200 V or more.
- The earth ground must be connected within one meter from the welding section. Do not connect the earth ground near to an electronically controlled device/ instrument or connectors.
- Make sure that there are no seals or bearings between the welding section and the earth ground.
- Do not connect the earth ground around the pins for the working equipment or hydraulic cylinders.
- When welding is to be done on the machine body, disconnect the connectors for the electronically controlled devices before working.

Vibrations operators are subject to

According to the results of the tests conducted to determine the vibrations transmitted to the operator by the machine, the upper limbs are subjected to vibrations lower than 2.5 m/s^2 (8.2 ft/s^2) while the seated part of the body is subjected to vibrations lower than 0.5 m/s^2 (1.64 ft/s^2).

Checks after maintenance

- Gradually increase the engine speed from a low idle to maximum speed and check that there is no oil or water leaking from the serviced parts.
- Operate each control lever and check that the machine is operating properly.

Disposing of wastes



- Always collect oil that is drained from the machine in containers. Improperly disposed waste oil can cause environmental harm.
- Follow appropriate laws and regulations when disposing of harmful objects such as oil, fuel, coolant, solvent, filters and batteries.

Handling of poisonous chemicals

Poisonous chemicals will cause serious injury if directly contacted.
Poisonous chemistry used in this machine includes grease, battery solution, coolant, paint and adhesive agent.
Handle the poisonous chemicals properly with care.

SAFETY SIGNS (DECALS)

For the safety of the operator and the personnel working around the site, safety signs (decals) are placed at certain locations on the machine as shown below. Walk around the machine with this manual, and check the content and location of these safety signs. Review these signs and the operating instructions in this manual with your machine operators.

- Keep the signs clean and legible. If any of the safety labels is peeling or damaged and becomes difficult to read, replace it with a new one. Please include your product serial number when ordering a new sign from the Takeuchi service agent.
- When a part/unit to which a safety sign is attached is replenished, a new sign must be attached to the new part/unit.

SAFETY SIGNS (DECALS)

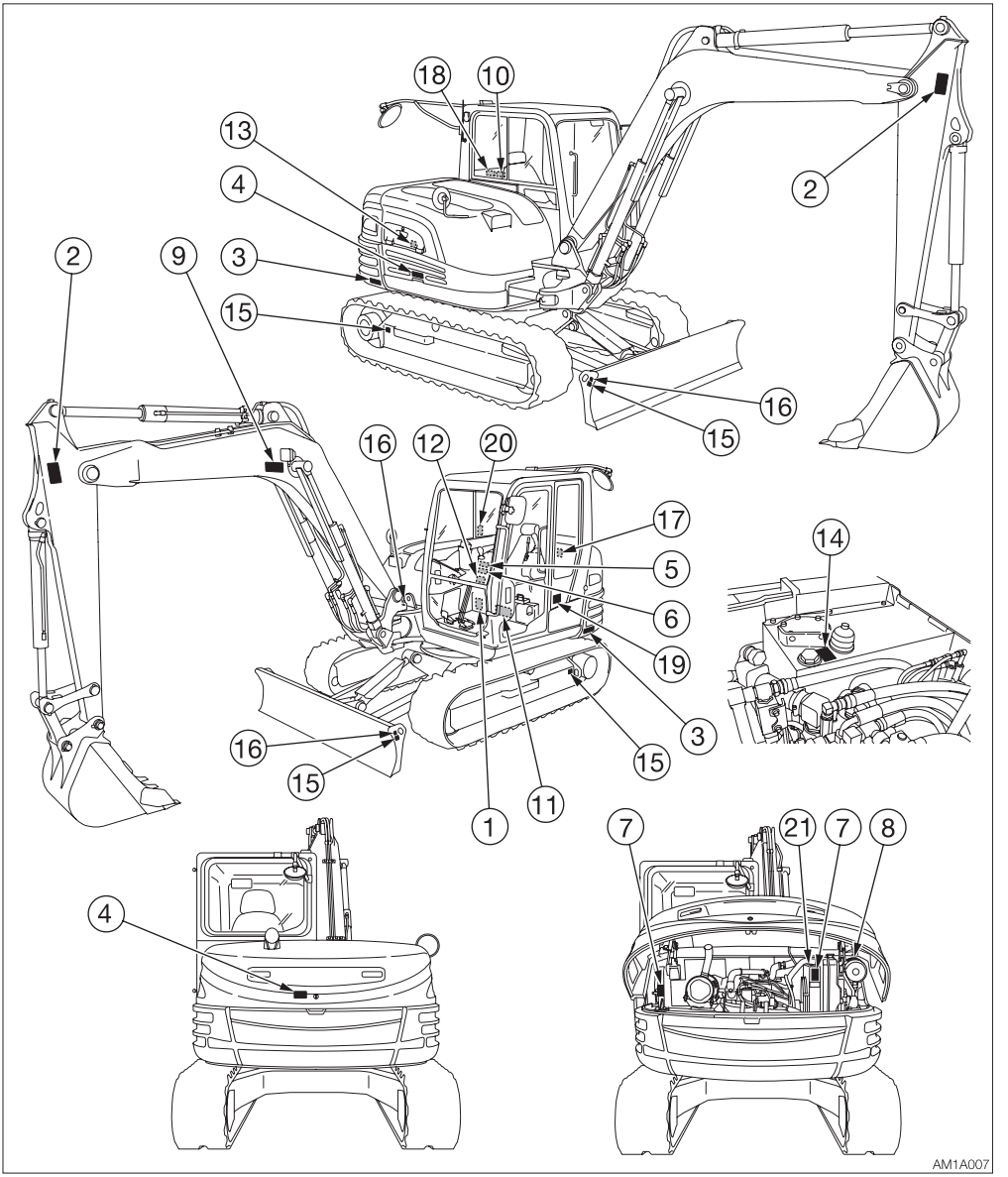

1. No.08810-31556
Warning
Read and understand this manual before performing any operation, inspection or maintenance on this machine.



2. No.05793-00049
Safety Distance
Hazard of being hit by the working device of the machine.
Keep away from machine during operation.



3. No.05793-00011
Safety Distance
Do not get near or stand within the machine working area.

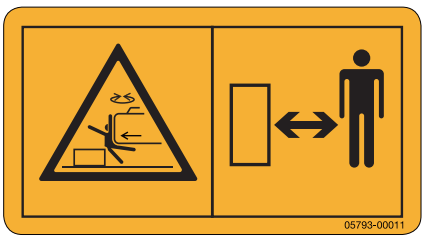

4. No.03793-66006
Hazard of rotating parts
Turn off before inspection and maintenance.



5. No.08810-31557
Hazard from falling window
After raising window, be sure to lock it in place with lock pins.



6. No.05793-00045
Hazard at lifting or lowering window
When the front window is opened or closed, it will come close to the head. Be careful that the window does not strike the head.



7. No.05793-03630
Sign indicates a burn hazard from touching heated parts, such as engine, pump, or muffler during or right after operation.
Never touch when hot.



AM4A003E

8. No.03393-75040



9. No.03593-47010 (If equipped)



10. No.03593-47020



11. No.03593-13700

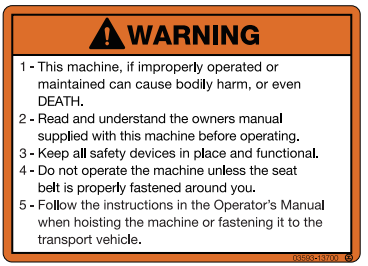

12. No.08710-86051
Position of Emergency Exit

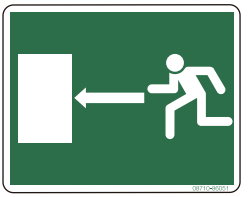

13. No.03593-06600
Diesel fuel



14. No.03593-06700
Hydraulic oil

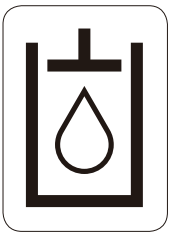

AM1A0052E

15. No.08810-31549
Tie down point



16. No.03993-00500
Position of hoisting



17. No.03993-00400
For EU
Position of Fire extinguisher



18. No.03593-32300 (If equipped)



19. No.03993-54628 (If equipped)
This value indicates the noise level outside the machine and refers to the noise perceived by the persons who are in the vicinity of the work area.

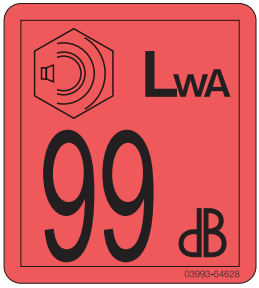

20. No.03793-69110 (If equipped)



WARNING!
Do not press the float switch while the machine is raised by the dozer blade. Doing so may cause the machine to fall.

21. No.03393-50070



Sign indicates a burn hazard from spurting hot water or oil if radiator or hydraulic tank is uncapped while hot.
Allow radiator or hydraulic tank to cool before removing cap.

AM1A008EN

CONTROLS



NAMES OF COMPONENTS

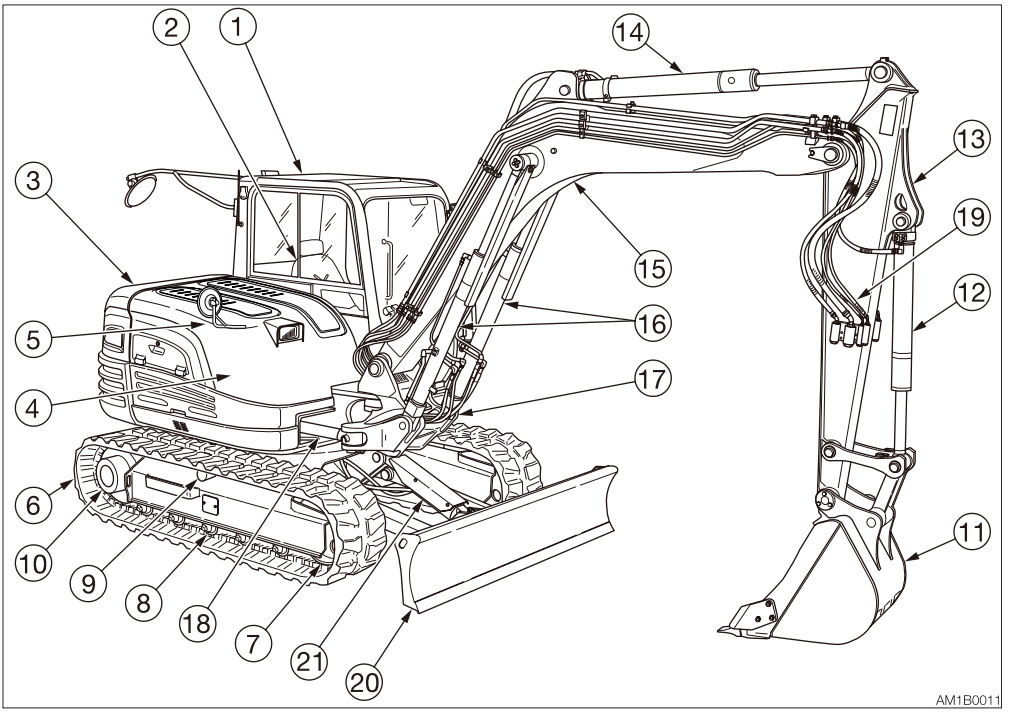

Upperstructure
1. Cab
2. Seat
3. Engine hood
4. Fuel tank
5. Hydraulic oil tank

Undercarriage
6. Crawler belt
7. Idler
8. Track roller
9. Carrier roller
10. Travel motor

Working equipment
11. Bucket
12. Bucket cylinder
13. Arm
14. Arm cylinder
15. Boom
16. Boom cylinder
17. Boom bracket
18. Swing cylinder
19. Auxiliary hydraulic lines
20. Dozer blade
21. Blade cylinder
22. Second boom
23. Second boom cylinder

2-Piece boom

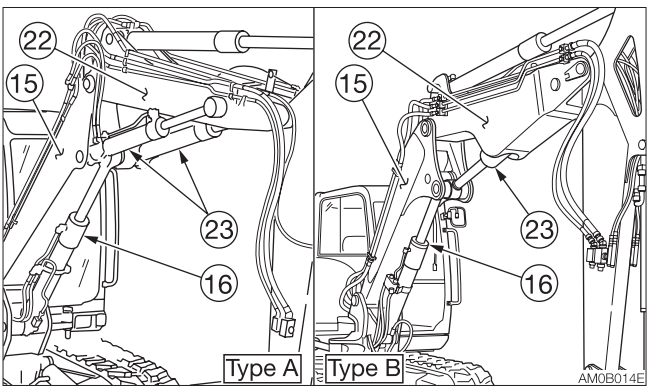

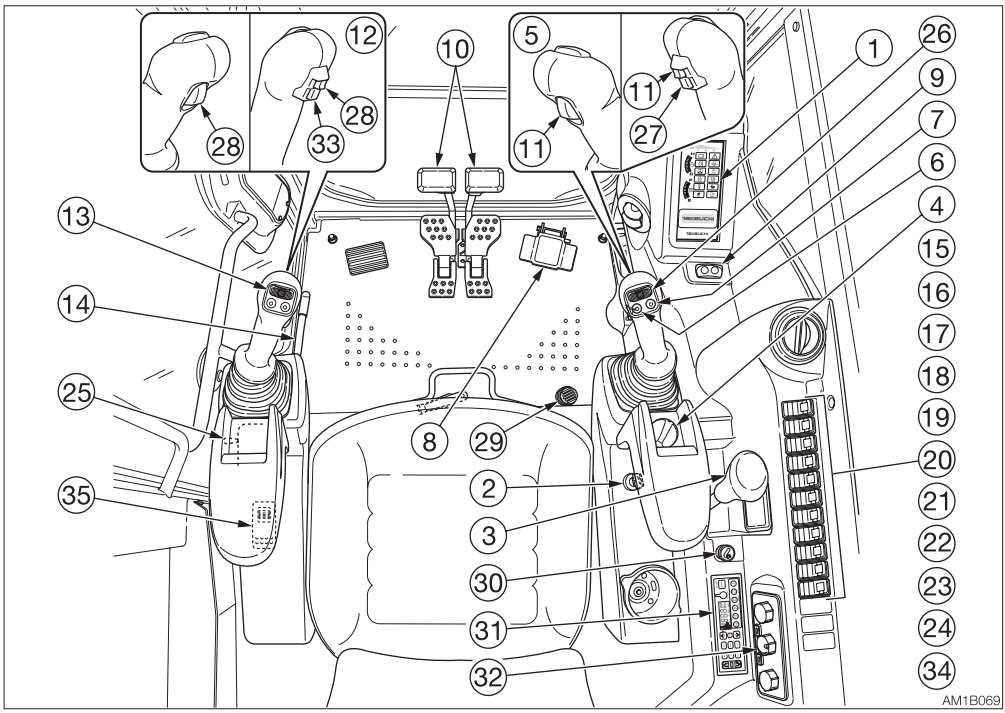

1. Instrument cluster
2. Starter switch
3. Blade lever
4. Throttle controller
5. Right operating lever*
6. Horn button
7. Deceleration button
8. Boom swing/Second boom pedal
9. Trip/Data switch
10. Travel levers/pedals
11. Travel speed button
12. Left operating lever*
13. Auxiliary 1st switches
14. Safety lock lever
15. Light switch
16. Wiper switch
17. Washer switch
18. Automatic deceleration switch
19. ECO mode switch
20. Highland mode switch
21. Auxiliary 1st flow rate select switch
22. Detent mode switch
23. Lift overload warning switch*
24. Beacon lamp switch*
25. Engine shutdown switch
26. Auxiliary 2nd/4th switch*
27. Auxiliary 2/4 select button*
28. Third auxiliary hydraulic button*
29. Third auxiliary hydraulic switch*
30. Cigarette lighter
31. Radio
32. AC Control panel
33. Swing/Second boom select button*
34. Auxiliary 1st auto tank switch*
35. Third auxiliary hard-lock switch*

*: Subject to the specifications or optional products selected

COVERS

STARTER KEY

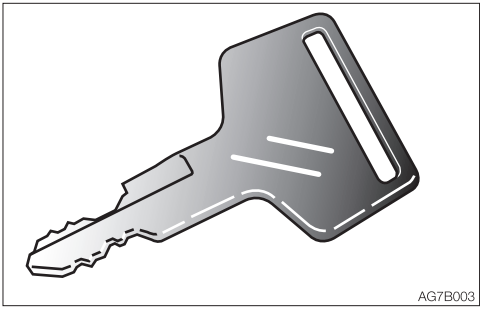

The starter key is used to start and stop the engine, as well as to lock and unlock the following components:
- Cab door
- Engine hood
- Covers

SIDE COVER

⚠ WARNING

- **Stop the engine and allow the machine to cool down before performing maintenance.**
- **Be sure to secure the side cover with the stopper before working inside. Do not keep the side cover open on a windy day or if the machine is parked on a slope.**
- **When opening and closing the side cover, be careful not to get your hands or other parts of your body caught by the cover.**

For inspection and maintenance of the hydraulic oil system, fuel system, coolant system or window washer, open this cover. The grease gun and the tools are also stored in the cover.

Opening

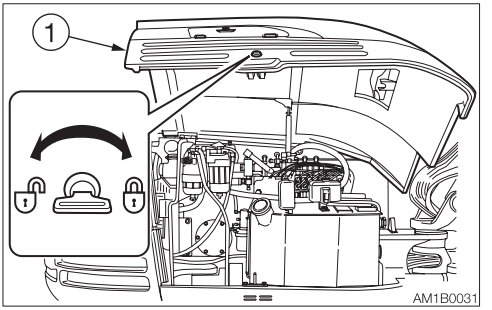

1. Insert the starter key and turn it counterclockwise to unlock the side cover (1).
2. Push in the key hole with your thumb and open the side cover (1) all the way.

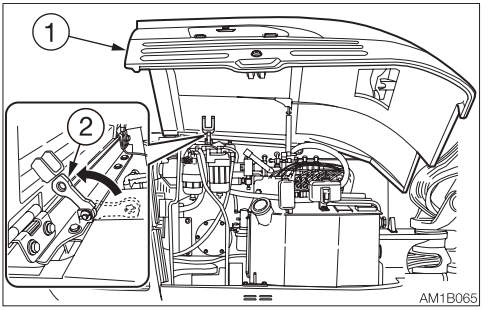

3. Raise the stopper (2) to secure the cover.
4. Store the tools.

Closing

1. Support the side cover (1) by hand and release the stay (2).
2. Close the side cover (1) and press it down until a click is heard.
3. Insert the starter key and turn it clockwise to lock the side cover (1).

FUEL LID

⚠ CAUTION

When opening and closing the fuel lid, be careful not to get your hands caught by the lid.

For adding fuel or checking the level of hydraulic oil or coolant, open this cover.

Opening

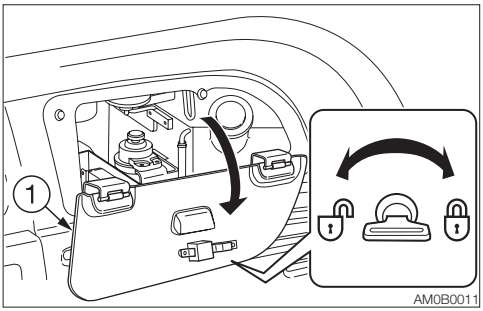

1. Insert the starter key and turn it counterclockwise to unlock the fuel lid (1).
2. Remove the starter key, push in the key hole with your thumb and open the fuel lid (1) all the way until it stops.

Closing

1. Close the fuel lid (1).
2. Insert the starter key and turn it clockwise to lock the fuel lid (1).

FUEL FILLER PORT

⚠ WARNING

- **Do not smoke and keep away from heat or flame while filling the fuel tank.**
- **Fill the fuel tank in a well ventilated place, with the engine turned off.**
- **Clean up spilled fuel immediately.**
- **Do not fill the fuel tank to capacity. Allow room for oil expansion.**
- **Securely tighten the fuel filler cap.**

Opening

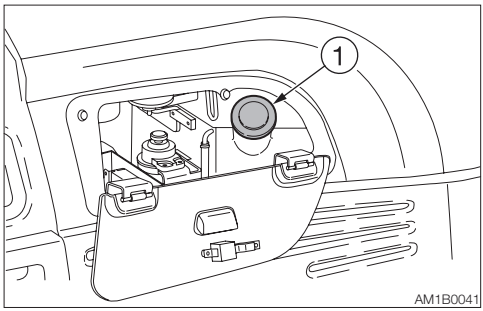

1. Open the fuel lid.
2. Turn the fuel cap (1) counterclockwise and remove it.

Closing

1. Turn the fuel cap (1) it clockwise and close it.
2. Close the fuel lid and lock it.

ENGINE HOOD

⚠ WARNING

- **Before opening the engine hood, be sure to stop the engine. If a hand or tool becomes trapped in the rotating or moving part, serious injury could result.**
- **Do not leave the engine hood open on a windy day or if the machine is parked on a slope.**
- **When opening or closing the engine hood, be careful not to get your hands or other parts of your body caught by it.**

Opening

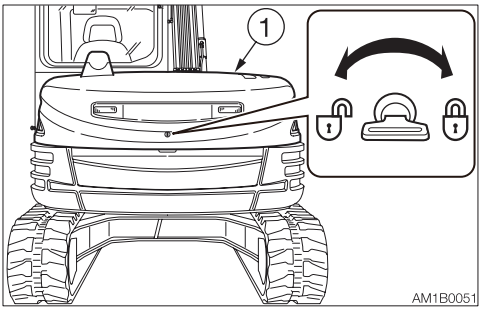

1. Insert the starter key and turn it counterclockwise to unlock the engine hood (1).
2. Push in the key hole with your thumb and open the engine hood (1).

Closing

1. Close the engine hood (1) and press down the edge of it until a click is heard.

FUSE BOX COVER

For inspection and maintenance of the fuse or air conditioner filter, open this cover. The port for connecting to a computer is inside the box.

Opening

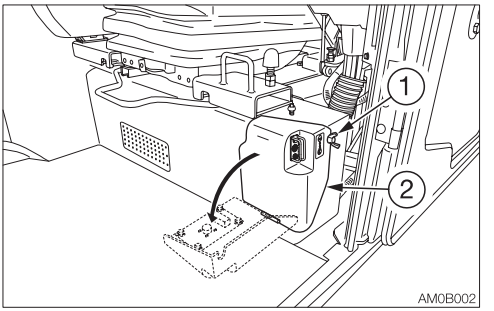

1. Remove the wing bolt (1).
2. Tilt the fuse box cover (2) forward.

Closing

1. Close the fuse box cover (2) and secure it with the wing bolt (1).

CAB

CAB DOOR

⚠ WARNING

When getting on or off the cab, first open the door all the way until it is secured in the catch and check that it does not move.

Open the door fully and press it against the catch at the back of the door to secure it in place.
The door must be locked when getting on or off the machine and while in operation.

Locking and unlocking

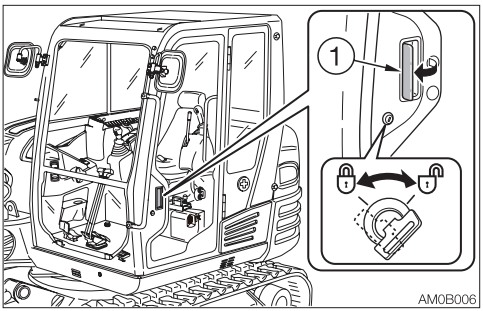

Insert the starter key and turn it.

Opening

1. Pull the knob (1) towards you and open the door.

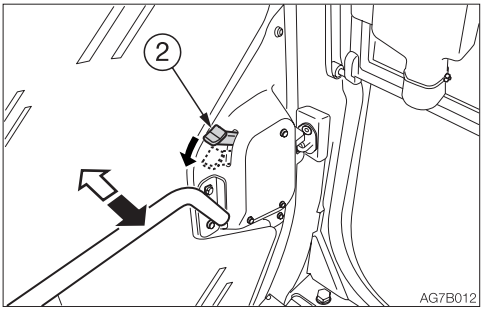

To open the door from inside the cab, push the lever (2) to the lower.

2. Open the door fully and press it against the cab to secure it in place.

Closing

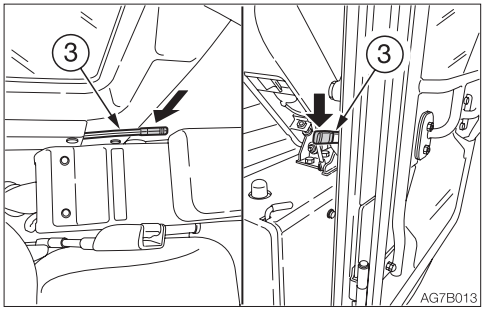

1. Push the release lever (3) to the lower.
2. Close the released door.

EMERGENCY EXIT

Front window (excluding machines with a front guard)

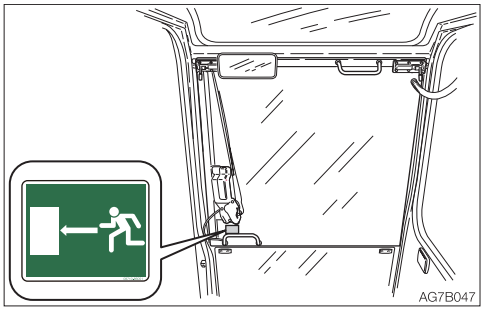

If you should become trapped inside the cab, open the front window to get out.

FRONT WINDOW

⚠ WARNING

- **Grasp the handles firmly with both hands when opening and closing the front window. Your head or hands may get caught if it slips from your hands.**
- **When the front window is opened or closed, it will come close to the head. Be careful that the window does not strike the head.**
- **When you open the front window, be sure to lock it in place with the lock pins on the left and right sides. The window may fall if it is not locked in place.**

Opening

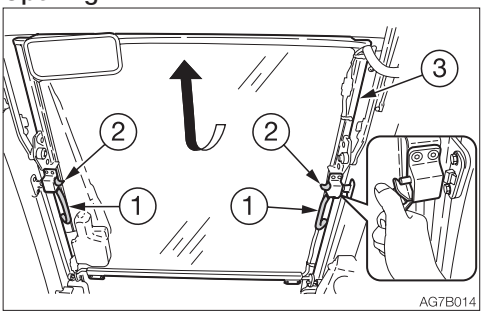

1. Park on a level surface and stop the engine.
2. Set the safety lock lever to the locked position.
3. Grasp the left and right handles (1) and press the knobs (2) with your thumb to release the lock.
4. Pull the front window (3) toward you and lift while doing so.

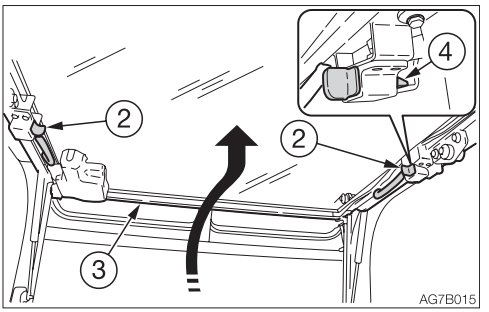

5. Release your thumb from the knobs (2) and then lift the front window (3) fully and lock the front window with lock pin (4).

Closing

⚠ WARNING

When closing the front window slowly so as not to hit your head. Lowering the window abruptly may result injury or damage the front window.

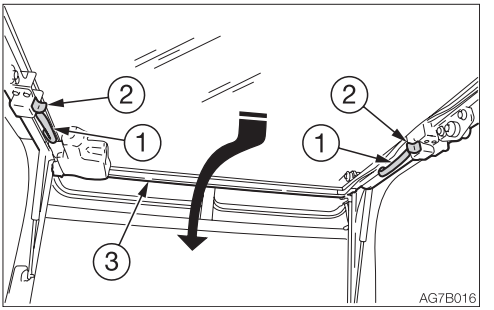

1. Grasp the left and right handles (1) and press the knobs (2) with your thumb to release the lock.
2. Pull down the front window (3) and while doing so, slide it to the front and slowly lower it.

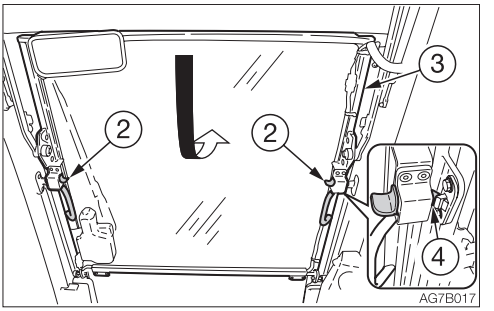

3. Release your thumb from the knobs (2) and then press the front window toward front and lock the front window with lock pin (4).

LOWER FRONT WINDOW

Removing

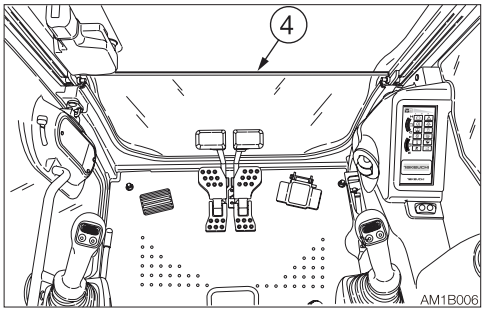

1. Open the front window and stow it in the ceiling.
2. Slowly lift the lower front window (4).

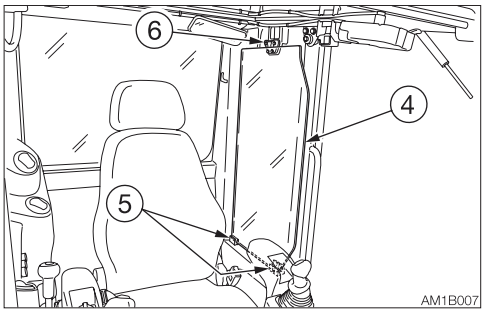

3. Hold the window in a vertical position (the bottom of the window should be in front of you), place it through the guide (5) on the left side of the cab, and then secure it with the support (6).

SIDE WINDOW

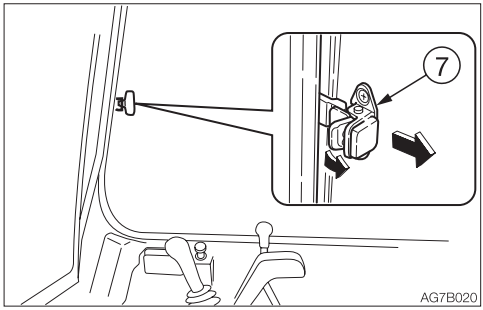

1. Grasp the catch (7), unlock it and open the side window.
2. To close the side window, close it until a click is heard.

EMERGENCY HAMMER (OPTIONAL)

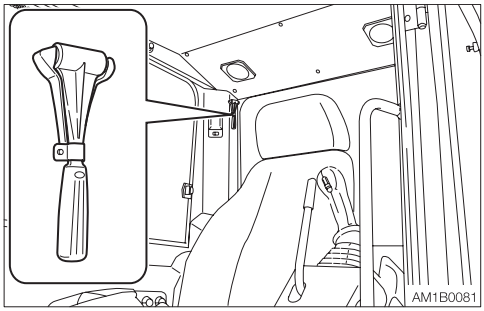

An emergency hammer is installed to be used to escape from the cab in an emergency. When escaping, break the windows with the hammer.

- When breaking the windowpane with a hammer, take great care not to injure yourself with the broken glass pieces.
- Remove the glass pieces from the window sill so as not to cut yourself when evacuating. Broken glass will fall from the window, so be careful of your footing and do not slip on the glass.

SEAT AND SEAT BELT

SEAT

⚠ WARNING

- **Adjust and secure the seat.**
- **Do not make any adjustments while operating the machine.**
- **Do not set the backrest to its maximum reclining position and slide the seat backwards at the same time. Doing so may damage the rear window or cause injury.**
- **Remember that the backrest returns to the forward position abruptly due to the spring force.**

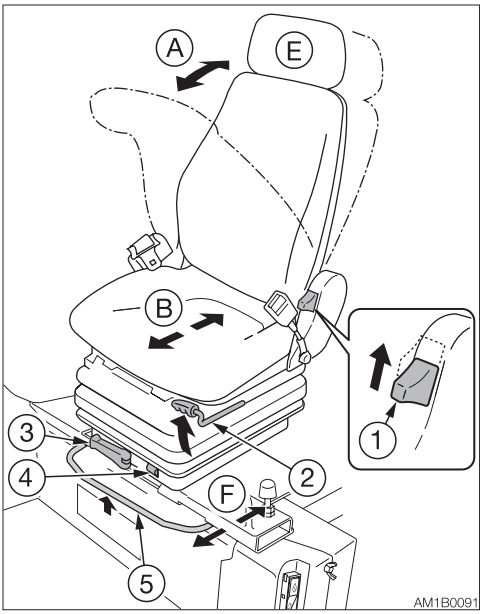

(A) Adjusting the backrest angle

1. Sit up and sit back in the seat.
2. Pull up the lever (1), recline the backrest by using the spring force. Release the lever (1) at the desired angle to secure the backrest.

(B) Fore-and-aft adjustment

1. Pull up the lever (2) and slide the seat backward or forward to the desired position for operation of machine.
2. Release the lever (2) at the desired position to secure the seat.
   Adjustment range: 15 positions, in 150 mm (5.9 in.)

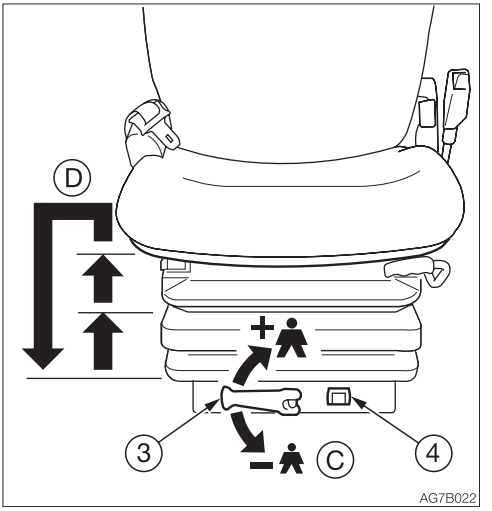

(C) Adjusting according to operator's weight

1. Turn the handle (3) until the scale (4) indicates the weight of operator.
   Adjustment range: 50 to 130 kg (110 to 287 lbs)

(D) Adjusting the height of the seat

Upward

1. Lift the seat to first or second position click-stop.
   Adjustment ranges: 2positions, in 60mm (2.36 in.)

Downward

1. First lift the seat to highest position, then the seat can be lowered to lowest position.

(E) Adjusting the headrest (Option)
The headrest (E) can be moved upward or downward.
1. Grab the headrest (E) with both hands, and move upward or downward to the desired position.

(F) Adjusting the operating lever stand

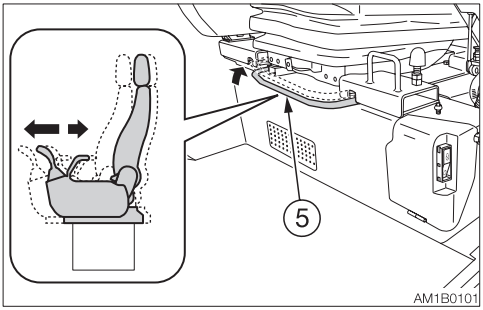

1. Pull up the lever (5) and slide the lever stand (seat).
2. Release the lever (5) at the desired angle to secure the lever stand (seat).
   Adjustment range: 9 positions, in 90 mm (3.5 in.)

SEAT BELT

⚠ WARNING

Be sure to fasten the seat belt securely before starting the engine.

Fastening the seat belt
1. Adjust the seat to the desired position for operation, sit up and sit back in the chair.
2. Pull the seat belt to the desired length.

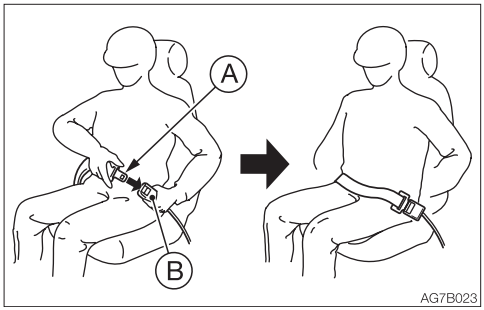

3. Make sure that the belt is not twisted and then insert the tongue plate (A) into the buckle (B) of the seat belt until you hear a clicking sound as it locks in place.
4. Check if the belt is securely locked by pulling it, and arrange the belt around your waist.

Releasing the seat belt

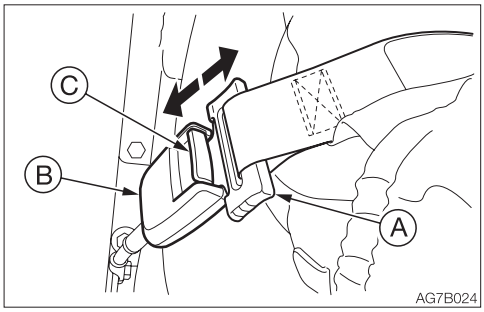

1. Grasp the tongue plate (A) and press the button (C) on the buckle (B).
   The seat belt retracts back into its original position.

AIR SUSPENSION SEAT

⚠ WARNING

- **Adjust and secure the seat.**
- **Do not make any adjustments while operating the machine.**
- **Do not set the backrest to its maximum reclining position and slide the seat backwards at the same time. Doing so may damage the rear window or cause injury.**
- **Remember that the backrest returns to the forward position abruptly due to the spring force.**

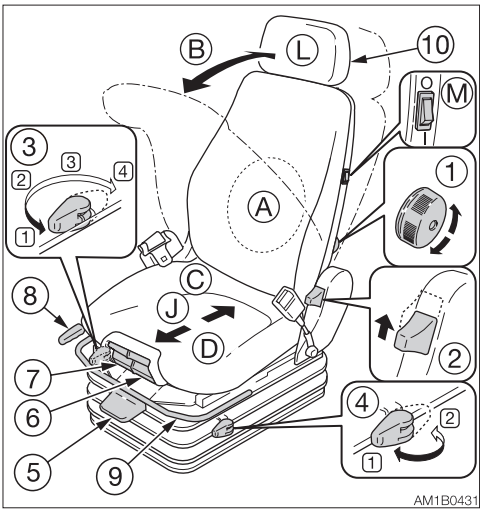

(A) Adjusting the lumber support

1. Turning the knob (1) in the direction of the arrow causes the lumber of the backrest to curve outwards.
2. Turning the knob (1) further removes the curve and returns the seat to its original position.

(B) Adjusting the backrest angle

1. Sit up and sit back in the chair.
2. Pull up the lever (2), adjust the backrest rear angle by using the spring force on the chair back. Release the lever (2) at the desired angle to secure the backrest.

(C) Adjusting the absorber

The seat adjustment using the absorber is applicable for various traveling conditions on roads or off roads. The cushioning effect can be individually set for each case.
Turn the lever (3) to the desired position and release.

Positions between
1: Soft cushioning
and
4: Hard cushioning

(D) The fore/aft isolator
It is activated under certain conditions such as crashing. Impacts of crash applied in the operating direction can be well absorbed by the operator's seat. Switching can be done with the lever (4).

Position 1: Fore/aft isolator on
Position 2: Fore/aft isolator off

(E) Adjusting according to operator's weight

IMPORTANT: Before performing the adjustment by weight, stop the machine and remain seated. Otherwise, the weight cannot be detected, resulting in malfunction.
IMPORTANT: Be sure to set the absorber to the soft cushioning position (1) when performing the adjustment by weight.

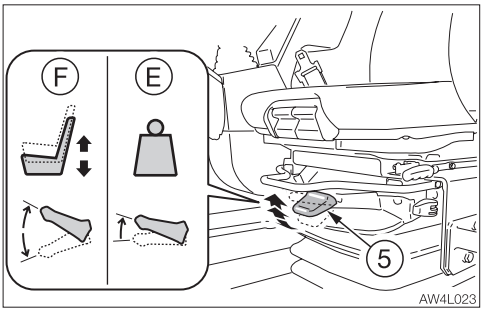

The seat should be adjusted according to the operator's weight. Briefly pull the actuator lever (5) of the automatic weight and height adjuster.

(F) Adjusting the seat height

IMPORTANT: Be sure to set the absorber to the soft position (1) when performing the height adjustment.
IMPORTANT: Do not operate the lever (5) (compressor) for one minute or more. Doing so will cause compressor failure. To protect the compressor, wait for at least three minutes before operating the lever (5) again.
IMPORTANT: If the height adjustment function fails, first lower the seat to the lowest position. Then, adjust the height again.

The seat height can be steplessly adjusted using the pneumatic mechanism.

To adjust, push up or push down the lever (5) all the way up or down. When the seat reaches the level where it cannot be raised anymore even the lever (5) is pushed up, that level is the highest. If this happens, the height is automatically lowered a small distance to maintain the stroke of suspension.
Adjustment stroke: 80 mm (3.1 in.)

(G) Adjusting the seat pan angle

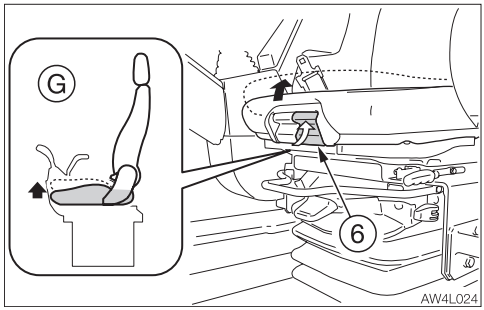

The angle of the seat pan can be individually adjusted.
To adjust, lift the left side handle (6). Use the pressure applied to the seat to set the seat pan to the desired angle.

(H) Adjusting the seat depth

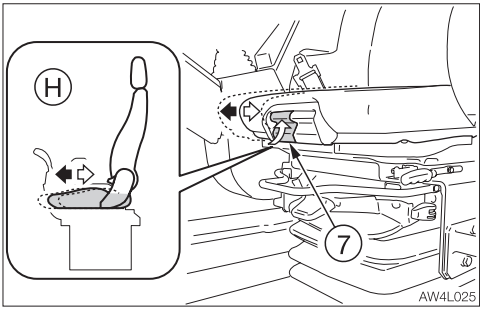

The depth of the seat pan can be individually adjusted.
To adjust, lift the right side handle (7). Move the seat cushion forward or backward until the desired seat depth is obtained.

(J) Adjusting fore-and-aft

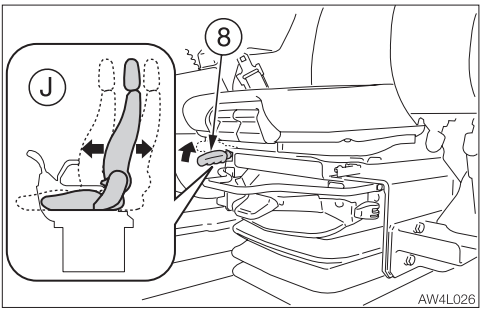

1. Pull up the lever (8) and slide the seat backward or forward to the optimum position for operation.
2. Release the lever (8) at the optimum position to secure the seat.
   Adjustment range: 17 positions, in 170 mm (6.7 in.)

(K) Adjusting the operating lever stand

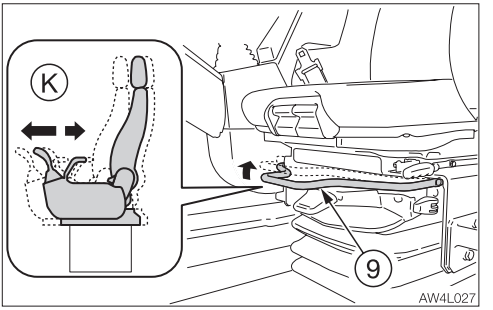

1. Pull up the lever (9) and slide the lever stand (seat).
2. Release the lever (9) at the optimum position to secure the lever stand (seat).
   Adjustment range: 9 positions, in 90 mm (3.5 in.)

(L) Adjusting the headrest height

1. Grab the headrest (10) with both hands, and move upward and downward. Adjust the height so that the headrest center is positioned behind your ears.

(M) Seat heater

⚠ CAUTION

- **Using the seat heater over an extended period of time may cause burns. People feeling ill or having sensitive skin, in particular, should be careful not to do so.**
- **Do not use it with a blanket or cushion placed on the seat.**
- **Clean up spilled water or soft drink immediately with a dry cloth. Dry the seat well before using the heater again.**

IMPORTANT: The battery voltage becomes low if the seat heater is left on for a long time when the engine is stopped.

O.....OFF
I.....ON

INSTRUMENT CLUSTER

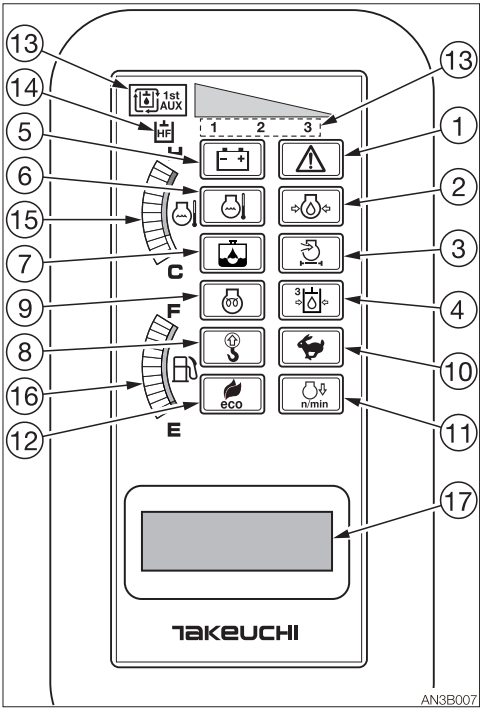

Once the starter switch is turned to ON, all lamps on the instrument cluster light up and the alarm sounds.
If any lamp is not lit when the starter switch is turned to ON, there is something wrong in the machine. Consult your sales or service dealer.

WARNING LAMPS

IMPORTANT: If a warning lamp flashes and an alarm is sounded, immediately stop all operations and check the corresponding component.
Refer to "If a warning lamp flashes" on pages 6-10 and 6-11.

1. Vehicle and engine emergency lamp
While the engine is running, this lamp flashes and an alarm sounds if the engine oil pressure drops, the coolant temperature becomes too high, the charge or the water separator becomes faulty or the air cleaner becomes abnormal. Get the vehicle or engine error code number from the multi-data display and consult your sales or service dealer referring to the "Vehicle error code list" or "Engine error code list".

2. Engine oil pressure warning lamp
This lamp flashes and an alarm is sounded if the lubricant oil pressure abnormally low while the engine is running.

3. Air cleaner warning lamp
This lamp flashes and an alarm is sounded if the air cleaner filter is clogged while the engine is running.

4. Third auxiliary hydraulic warning lamp
This lamp lights up and an alarm sounds if the fixed side (left "e") pressure of the third auxiliary hydraulic line drops abnormally while the engine is running, or while the quick-hitch is being removed or installed.

5. Battery charge warning lamp
This lamp flashes and an alarm is sounded if a problem rises in the charging system while the engine is running.

6. Coolant temperature warning lamp
This lamp flashes and an alarm is sounded if the engine coolant temperature becomes abnormally high while the engine is running.

7. Water separator warning lamp
This lamp flashes if the water is detected within the water separator while the starter switch is in the ON position.

8. Overload warning lamp
This lamp turns on when the overload waning switch is turned on.

INDICATORS

9. Glow lamp
This lamp goes out when the engine preheating is completed.

10. Travel speed lamp
This lamp turns on when the travel speed button is set to the 2nd (high) speed.

11. Deceleration lamp
This lamp turns on when the deceleration button is pressed. It flashes when the auto-deceleration switch is pressed and changes to the “lit” state when the system enters the deceleration mode.
While in the “lit” state, it indicates that the engine is in the deceleration mode at low idling speed (1100 rpm).
This lamp flashes when the auto-deceleration switch is on and the engine is running at the RPM specified by the throttle controller.

12. ECO mode indicator lamp
This lamp turns on when the ECO mode switch is turned on. In the ECO mode, the machine drives with reduced engine RPM for lower fuel consumption.

13. Auxiliary 1st flow rate indicator lamp
This lamp lights up to indicate which flow rate setting is selected in the auxiliary 1st.
1 ..... Flow rate setting 1
2 ..... Flow rate setting 2
3 ..... Flow rate setting 3

METERS

14. High-flow indicator lamp
This lamp flashes four times and then stays lit when the auxiliary 1st flow rate is set to high-flow (105% or more).
It also flashes when the high-flow setting is changed.

15. Water temperature gauge
Indicates the temperature of the engine coolant water.
The LED should be within the green range during machine operation.
The red range indicates overheating.

16. Fuel Gauge
Indicates the amount of fuel in the tank.
When the fuel level becomes low, the bottom LED bar flashes eight times, and then the flash cycle is performed twice.
Flash cycle: LED bars turn on in succession from the bottom to the top, and then turn off in succession from the top to the bottom.
Be sure to top off the tank before running out of fuel.

MULTI-DATA DISPLAY

17. LCD (Liquid Crystal Display)
IMPORTANT: If the vehicle and engine emergency lamp flashes and a number appears on the vehicle or engine error code screen, refer to the "Vehicle error code list" or "Engine error code list" and contact your sales or service dealer for help

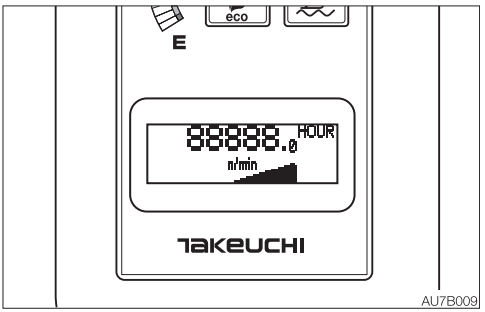

When the starter switch is turned to ON, the display of hour meter, trip meter or the various data items on the machine appears. The initial screen displays the hour meter, the trip meter or the PM accumulation amount.
PM: Particulate matter

Trip/Data switch

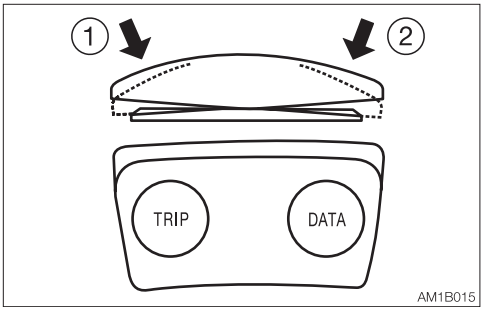

Press either the TRIP (1) side or the DATA (2) side to select a display mode.
- Press the TRIP (1) side to display the hour meter, trip meter or the amount of PM deposition.
- Press the DATA (2) side to display the various data.

TRIP MODE DISPLAY

The display changes as the TRIP (1) side is pressed as follows.
When the starter switch is turned on, the mode previously set (before the power-off) is displayed

1. Hour meter

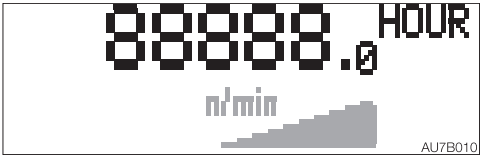

Displays the total engine running time in hours.
The rightmost digit indicates tenths of hours (6 minutes).
Set the inspection and maintenance intervals according to the time displayed on the hour meter.

2. Trip meter

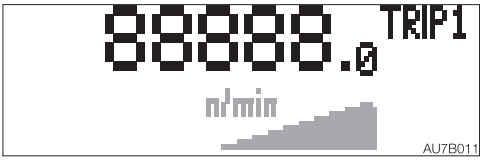

A pattern of desired operating hour can be displayed.
To reset the meter to "0", press and hold the TRIP side for three seconds.

3. Returns to the hour meter page.

DATA MODE DISPLAY

The display changes each time the DATA (2) side is pressed as follows:
Note that for TB285, “4. Engine oil pressure” and “5. Atmospheric pressure” will not be displayed.

1. Engine RPM

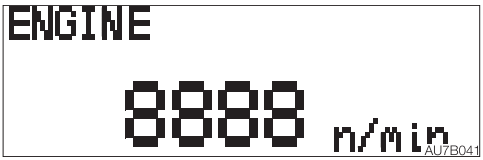

2. Battery voltage

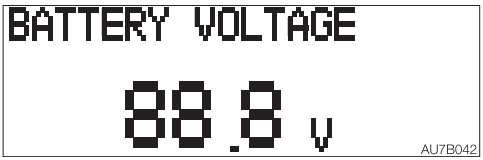

3. Coolant temperature

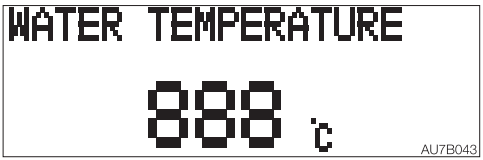

4. Engine oil pressure



Displays when the machine is TB290.

5. Atmospheric pressure



Displays when the machine is TB290.

6. Auxiliary 1st flow rate

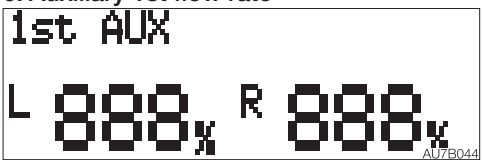

7. Auxiliary 2nd flow rate

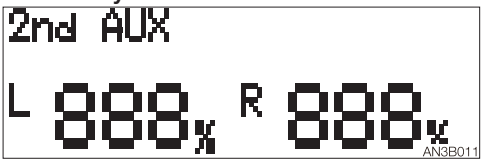

Displays as shown above when the auxiliary 2nd is selected.

8. Auxiliary 4th flow rate

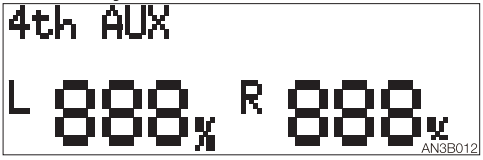

Displays as shown above when the auxiliary 4th is selected.

9. Returns to the engine RPM page.

MAINTENANCE MODE DISPLAY

While in the data mode, press and hold the DATA (2) side for three seconds to enter the maintenance mode.The display changes each time the DATA (2) side is pressed as follows:

1. Vehicle error code

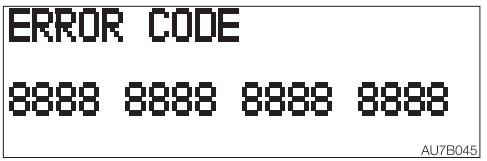

IMPORTANT: If an error code appears, immediately stop the operation and contact your sales or service dealer for help.

Displays four error code, with the latest code in the left.
Refer to “Vehicle error code list” on pages 6-12 to 6-13.

2. Engine error code

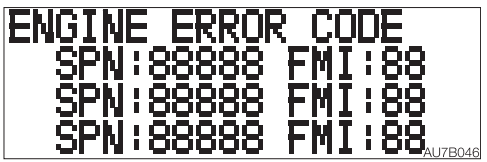

IMPORTANT: If an error code appears, immediately stop the operation and contact your sales or service dealer for help.

Displays three error codes, with the latest code at the top.
Refer to “Engine error code list” on pages 6-14 to 6-17.

3. Auxiliary 1st-1 setting information

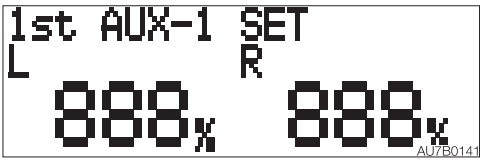

The flow rate of the Aux. 1st is displayed. The flow rate, except the flow rate of the Aux. 3rd, can be changed when the engine is at rest and the starter switch is set to ON.
The actual flow rate is not in conjunction with the value expressed in percent.
For setting the auxiliary piping flow rate, ask your service or sales dealer.

Changing flow rate

a. Raise the safety lock lever to the lock position.
b. Press and hold the Aux. 1st flow rate select switch for approximately three seconds to cause the values on the L side to flash.
c. Pressing the TRIP side of the Trip/Data switch decreases the flow rate by 5%. Pressing and holding it for one second decreases the flow rate by 5%. Pressing the DATA side of the Trip/Data switch increases the flow rate by 5%. Pressing and holding it for one second increases the flow rate by 5%.

Initial condition	LR common, standard flow	Variable range
Auxiliary 1st-1	100%=73L/min (19.3 US gpm)	10 to 100%
Auxiliary 1st-2	75%=55L/min (14.5 US gpm)	10 to 100%
Auxiliary 1st-3	50%=35L/min (9.2 US gpm)	10 to 100%

Initial condition	LR common, flow	Variable range
Auxiliary 2nd	100%=53L/min (14 US gpm)	10 to 100%
Auxiliary 4th		

Initial condition	LR common, high-flow	Variable range
Auxiliary 1st-1	140%=105L/min (27.7 US gpm)	105 to 140%
Auxiliary 1st-2	120%=90L/min (23.8 US gpm)	105 to 140%
Auxiliary 1st-3	105%=78L/min (20.5 US gpm)	105 to 140%

The table shows the 1-way flow rate when there is no load.
The above rates vary depending on the conditions. Use them as a rough indication.

d. Press the Aux. 1st flow rate select switch to confirm. At this time, the values on the R side starts flashing. Perform the same operation as for the L side. The section to be set changes each time the Aux. 1st flow rate select switch is pressed.
e. Press and hold the Aux. 1st flow rate select switch for approximately three seconds to end changing flow rate operation.

4. Auxiliary 1st-2 setting information

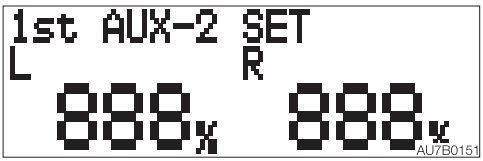

Refer to “Auxiliary 1st-1 setting information” above.

5. Auxiliary 1st-3 setting information

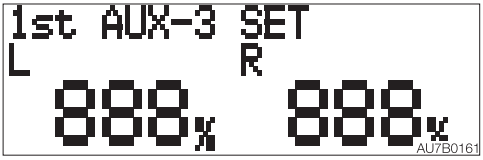

Refer to “Auxiliary 1st-1 setting information” above.

6. Auxiliary 2nd setting information

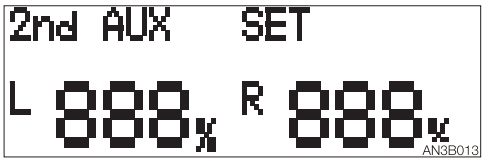

Refer to “Auxiliary 1st-1 setting information” above.

7. Auxiliary 4th setting information

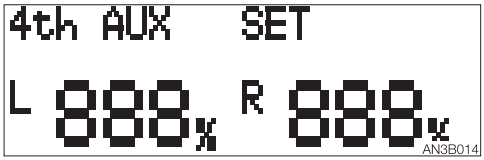

Refer to “Auxiliary 1st-1 setting information” above.
This information is displayed if the auxiliary 4th is equipped.

8. Engine model

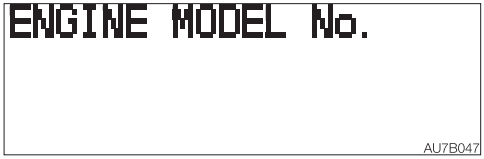

9. Engine serial number



10. Load dump relay display

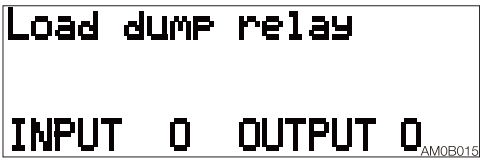

There is signal: O There is no signal: X

11. Safety lock lever solenoid valve display



There is signal: O There is no signal: X

12. Display of the solenoid valve for the Auxiliary 2nd/4th switching

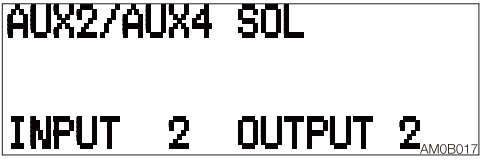

There is signal: “2” for Aux. 2 or “4” for Aux. 4th
There is no signal: no display

13. Display of the solenoid valve for the swing/second boom switching

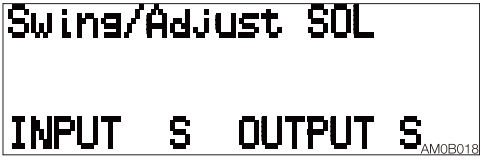

*: “Adjust” for the second boom
There is signal: “S” for swing or “A” for the second boom
There is no signal: no display

14. Auxiliary 3rd solenoid valve display

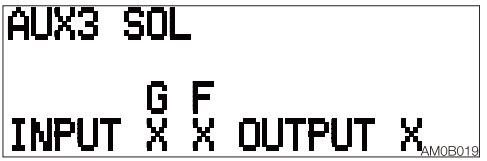

*: “G” for the Aux. 3rd button, “F” for the Aux. 3rd switch
There is signal: O There is no signal: X

15. Returns to the vehicle error code page.

OTHER DISPLAY

1. Swing/Second boom display

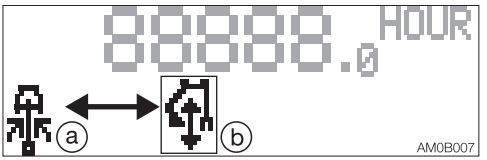

a: Swing is selected.
b: Second boom is selected.

2. Auxiliary 2/4 display

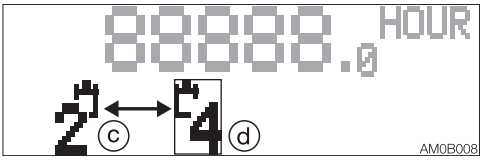

c: Auxiliary 2nd is selected.
d: Auxiliary 4th is selected.

Note: If there is no setting for the auxiliary 4th, the auxiliary 2nd will not be displayed.

3. High-flow display (optional)

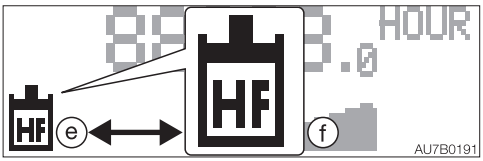

e: High-flow is selected.
f: Enlarged view

4. Dozer blade float display

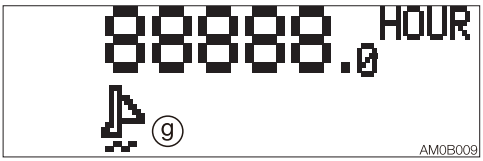

g: Dozer blade float is selected.

5. Highland mode display

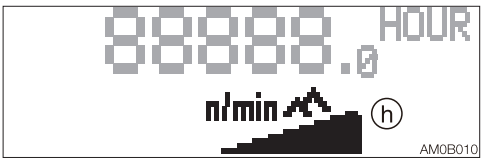

h: Highland mode is selected.

6. Overload warning display

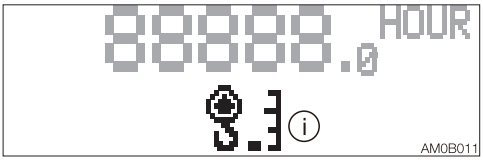

i: Overload warning switch is on.

7. Engine RPM display

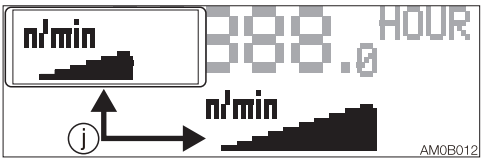

j: The graph changes as the engine RPM changes.

8. Hour meter/Trip meter display

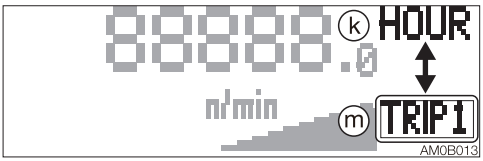

k: Hour meter is selected.
m: Trip meter is selected.

9. ECM warning display

IMPORTANT: If the ECM warning display flashes and a number appears on the engine error code screen, refer to the "Engine error code list" and contact your sales or service dealer for help.

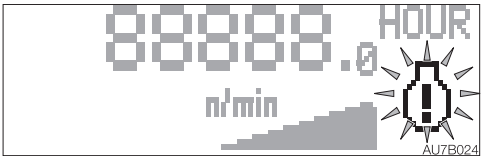

This warning display flashes if the Electronic Control Module (ECM) detects an engine problem while the starter switch is in the ON position. The data screen appears with an ECM error code indicating the problem just detected. Refer to "Engine error code list" on pages 6-14 to 6-17.

SWITCHES

STARTER SWITCH

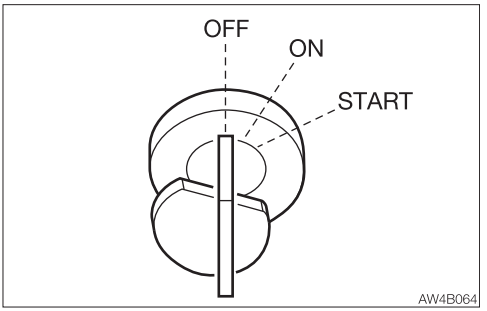

IMPORTANT: Do not repeatedly switch the key from OFF to ON and ON to OFF over a short period. Doing so will cause engine breakdown.

OFF ..... Position for stopping the engine and inserting or removing the key.
ON ..... Position in which the engine is running. At this position, all the electrical equipment is functional. When the coolant temperature is too low, the engine is automatically preheated.
START ..... Position for starting the engine. When the key is released, the switch automatically returns to the ON position.

ENGINE SHUTDOWN SWITCH

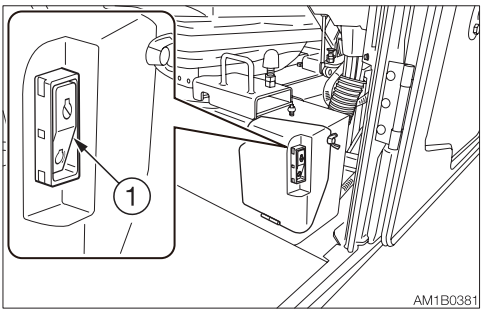

This switch is used to shutdown the engine if it fails to stop, due to machine failure or breakage, when the starter switch is set to the OFF position.
1. Press the switch (1).
2. After use, reset the switch (1).

THROTTLE CONTROLLER

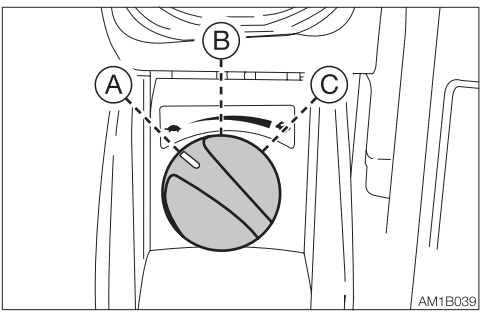

This controls the engine speed.
(A).....Low idling
(B) .....Medium speed
(C) .....Maximum speed

HORN BUTTON

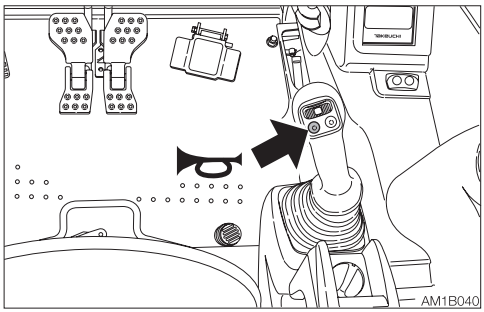

Press the button situated on the right operating lever to blow the horn.

DECELERATION BUTTON

⚠ WARNING

Before operating the deceleration button, set the operating lever to the neutral position and take your foot off the pedals. If the deceleration button is pressed while driving, the machine's operating speed will abruptly change to result in a dangerous situation.

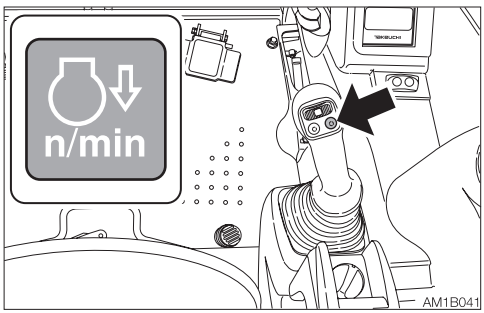

Press this button on the right operating lever to lower the engine speed to low idling. Press the button again to return to the engine speed set with the throttle controller. For safety reasons, it is designed that the deceleration function is activated to set the engine revolutions to low idling whenever the engine is started.
Cancel the deceleration mode by pressing the deceleration button as necessary.

Note: This deceleration button is capable of decreasing the engine speed and reducing the fuel consumption, with a simple operation, in a situation such as when little engine output is required and thus the operating or the travel levers are in neutral.

TRAVEL SPEED BUTTON

⚠ WARNING

When a load greater than a set value is applied during traveling in 2nd (high) speed, the speed will automatically slow down to 1st (low) speed. When the load becomes lighter, the speed will increase and return to 2nd (high) speed. It should be noted that the travel speed changes depending on the load condition (for machines with the automatic travel shift-down system).

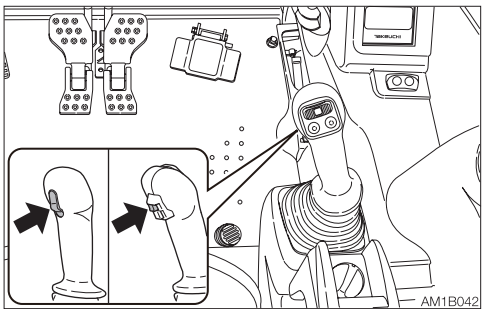

Press this switch to set the travel speed to 2nd (high) speed. Press it again to return to 1st (low) speed.

AUXILIARY 1ST SWITCHES

Auxiliary hydraulic buttons

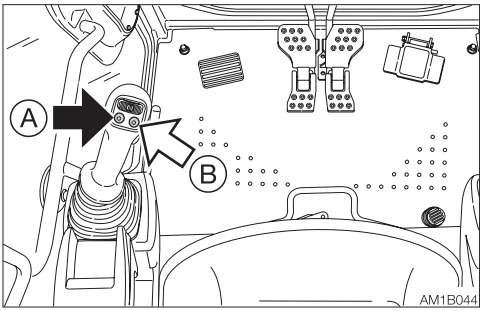

Press those buttons to control the flow of the oil in the first auxiliary hydraulic lines.
- Proportional control of the auxiliary hydraulic circuit is not possible.

(A).....Hydraulic oil flows to the left auxiliary line (a).
(B) .....Hydraulic oil flows to the right auxiliary line (b).

Slider switch
(Proportional control)

Proportional control allows for slow-to-fast/ fast-to-slow movement of attachment. Example: If you move the slider switch half way, the attachment will move at approximately one-half the speed.

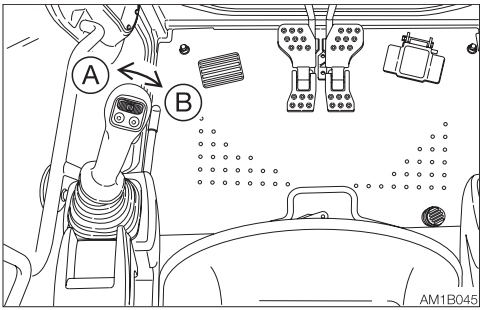

Move this switch to control the flow of the oil in the first auxiliary hydraulic lines.
(A).....Hydraulic oil flows to the left auxiliary line (a).
(B) .....Hydraulic oil flows to the right auxiliary line (b).

Refer to “Auxiliary hydraulic lines” on page 2-48 to 2-52.

AUXILIARY 2ND/4TH SWITCH

Slider switch
(Proportional control)

Proportional control allows for slow-to-fast/ fast-to-slow movement of attachment. Example: If you move the slider switch half way, the attachment will move at approximately one-half the speed.

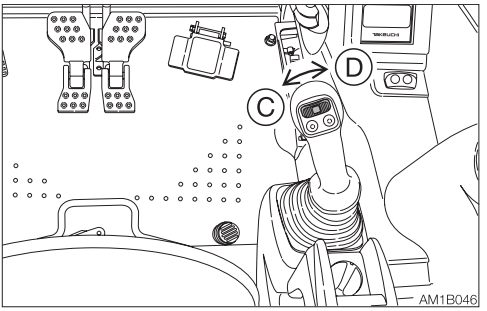

Move this switch to control the flow of the oil in the second auxiliary hydraulic lines.
(C): .....Hydraulic oil flows to the left auxiliary line (c).
(D): .....Hydraulic oil flows to the right auxiliary line (d).

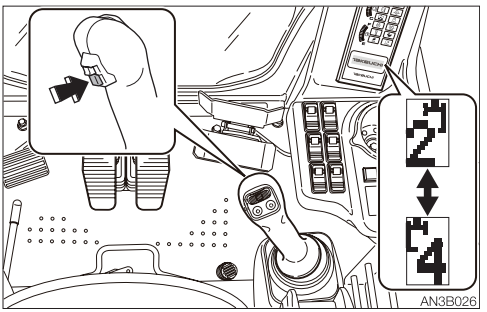

To use the auxiliary 4th hydraulic line, press the auxiliary 2/4 select button to change to the operation of the auxiliary 4th.
Refer to “Auxiliary hydraulic lines” on page 2-48 to 2-52.

SWING/SECOND BOOM SELECT BUTTON

⚠ WARNING

Turning on this switch while the boom swing pedal is depressed is dangerous, as the attachment may move unexpectedly. Always set the boom swing pedal back to the neutral position before operating the select switch.

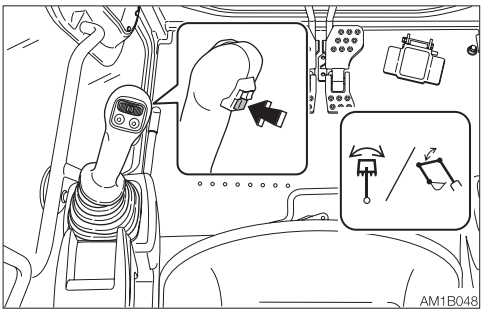

This switch is used to select either the boom swing operation or the second boom operation.

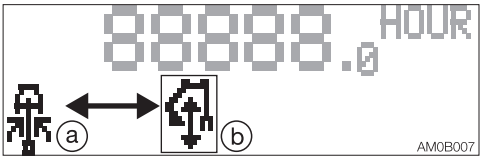

When the switch is turned on, the second boom display (b) appears on the LCD to indicate that the second boom operation is enabled. When the switch is turned off, the display is changed to the boom swing to indicate (a) that the boom swing operation is enabled.
The actual boom swing operation is performed with the boom swing pedal.
Refer to “Boom swing pedal” on page 2-34.

THIRD AUXILIARY HYDRAULIC BUTTON

Refer to “Third auxiliary hydraulic switch and button” on page 2-51.

AUXILIARY 2/4 SELECT BUTTON

Refer to “Auxiliary 2/4 select button” on 2-52.

THIRD AUXILIARY HARD-LOCK SWITCH (IF EQUIPPED)

Refer to “Third auxiliary hard-lock switch (If equipped)” on page 2-55.

WIPER SWITCH

IMPORTANT: If no washer fluid is discharged, do not operate the washer. Doing so may damage the pump.
IMPORTANT: Operating the wiper with no moisture on the windshield will scratch the glass. Use water or washer fluid when operating the wiper.
IMPORTANT: In cold climates, the wiper blade may freeze to the glass. Operating the wiper forcibly may damage the wiper motor.

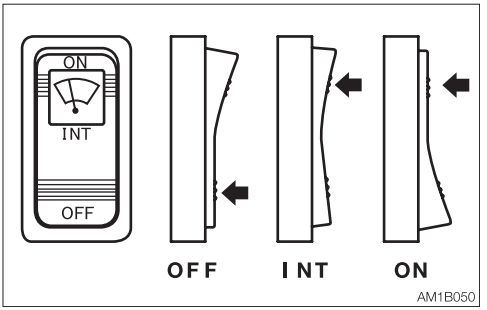

OFF ....Off
INT .....Intermittence operation
ON .....Continuous operation

WASHER SWITCH

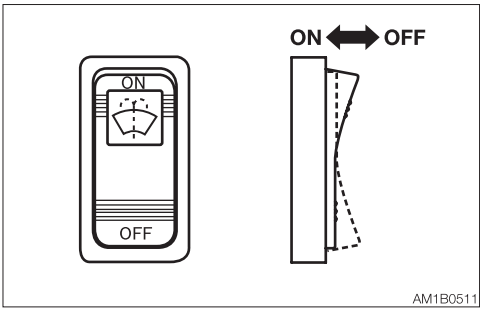

ON .....Pressing the ON side of the switch causes the washer to spray washer fluid. To stop spraying, release the switch.

AUTOMATIC DECELERATION SWITCH

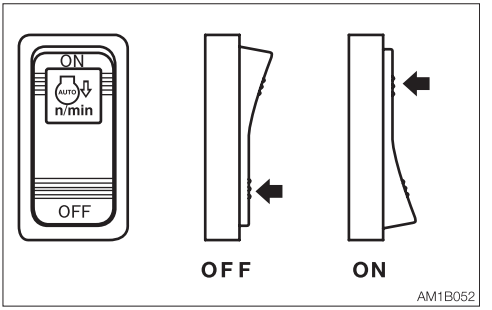

When the ON side of the switch is pressed, the deceleration lamp in the instrument cluster flashes. This flashing stops when the deceleration function starts working, and the lamp remains lit while in the deceleration mode. The engine speed automatically drops to low idle (deceleration mode) four seconds after the control levers are set to neutral, to reduce fuel consumption. Moving the control levers will cause the speed to return to the original engine speed.
Switching from the deceleration button to the auto-deceleration switch will first return to the engine speed set with the throttle controller. Then, the engine will automatically enter the deceleration mode (low idling) if the control levers are not operated within four seconds.

ECO MODE SWITCH

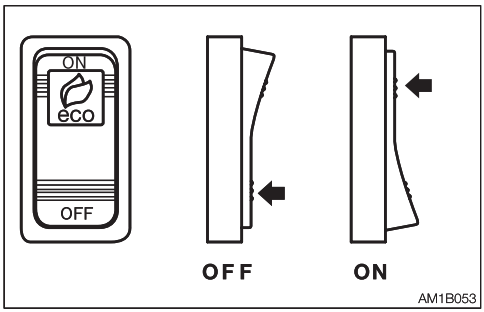

When the ON side of the switch is pressed, the ECO mode lamp in the instrument cluster lights up.
The engine RPM and hydraulic horse power are set to economically optimal values to improve the fuel economy.

HIGHLAND MODE SWITCH

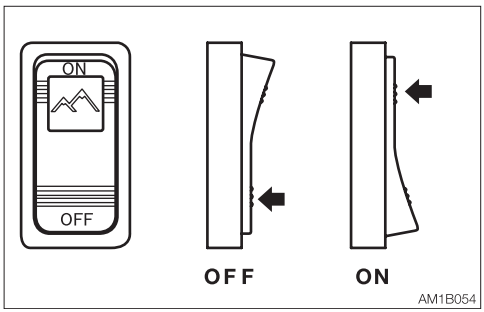

This switch is used to reduce the engine load due to the hydraulic pump. If the machine is operated at a high-altitude site, the engine output is decreased due to thin air. In such cases, the hydraulic horse power is automatically adjusted to prevent the engine from stalling. Use this switch if the machine is operated at a high-altitude site.

OFF ....Lowland
ON .....Highland

AUXILIARY 1ST FLOW RATE SELECT SWITCH

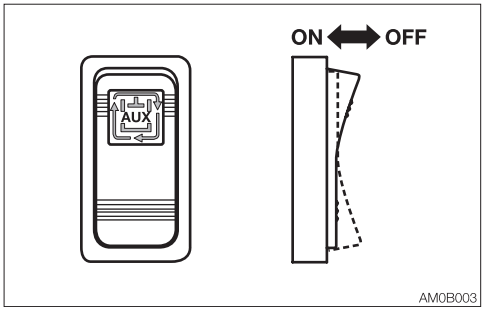

This switch is used to select and set the flow rate of the auxiliary 1st.
The auxiliary 1st flow rate indicator lamp in the instrument cluster lights up to indicate which flow rate setting is selected. The flow rate setting changes each time the ON side of the switch is pressed.
The flow rate setting is done by using this switch and the TRIP/DATA switch.
Refer to “4. Auxiliary 1st-2 setting information” on page 2-20.

DETENT MODE SWITCH (AUXILIARY 1ST)

IMPORTANT: Do not operate the machine in the detent mode for a long time. Doing so will increase the hydraulic oil temperature and shorten the service life of the hydraulic units.

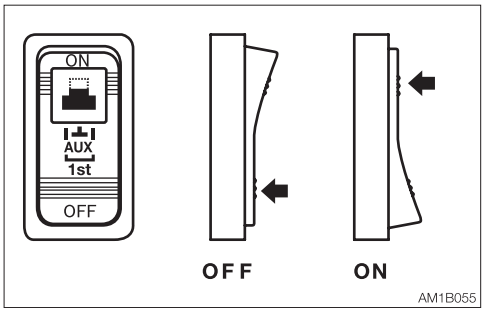

This switch is used to change the operation mode of the auxiliary 1st button (A). Pressing the ON side of the switch causes the

auxiliary button (A) to enter the detent mode. Pressing the OFF side changes to the momentary mode.

LIGHT SWITCH

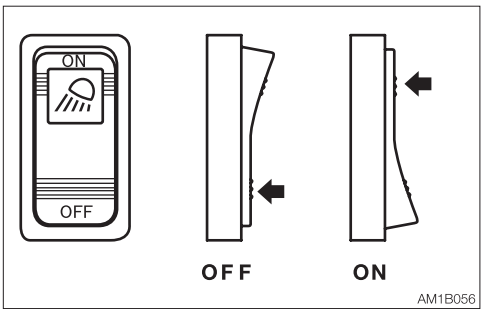

When this switch is turned while the starter switch is at ON, the lights turn on as follows:
OFF ....Off
ON .....Instrument cluster light, switch lamps, front light, boom light, side lights and tail lamps will be lit.
(switch lamp is lit)

LIFT OVERLOAD WARNING SWITCH

⚠ WARNING

If the overload is not removed after the overload warning horn is sounded, the machine may tip over or the emergency shut-off valve may be activated. If the horn starts sounding, stop operating the machine and lighten the load.

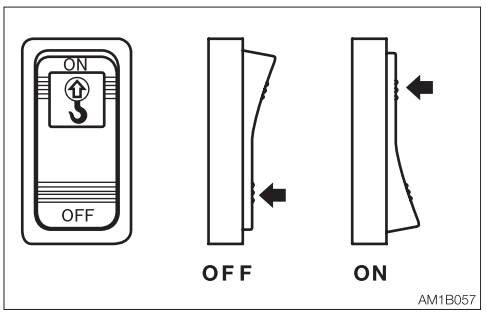

If a weight greater than the lifting capacity is applied or lifted, the overload warning device is activated and the horn sounds. (When the lift overload warning switch is turned on.)
OFF ....Off
ON .....On

BEACON LAMP SWITCH

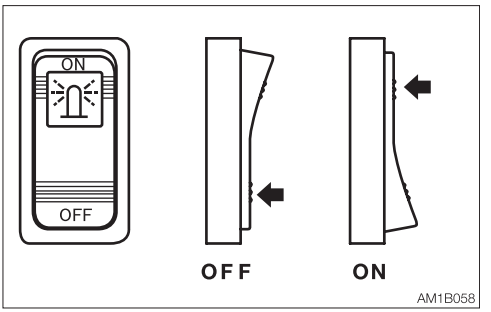

When this switch is turned on while the starter switch is at ON, the lamp turns on as follows:
OFF ....Off
ON .....Beacon lamp is lit

AUXILIARY 1ST AUTO TANK SWITCH (IF EQUIPPED)

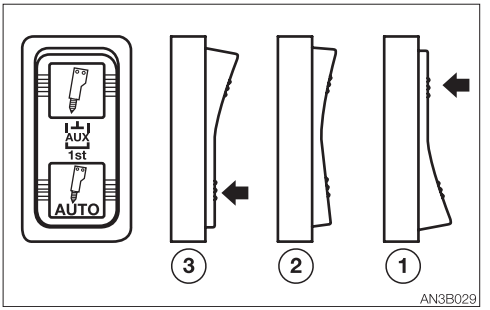

Use this switch to change the direction of hydraulic oil flow in the Aux. 1st line.

(1) When using a hydraulic breaker (1-way flow)
(2) When using a reversible attachment (2-way flow)
(3) The one-way flow can be set only when the button “A” of the Aux. 1 is pressed. (The tank circuit is automatically opened.)

LEVERS AND PEDALS

SAFETY LOCK LEVER

⚠ WARNING

- **Before standing up from the operator's seat to open/close the window or remove/install the lower window, lower the working equipment to the ground, raise the safety lock lever to engage the lock and stop the engine. If any controls should be accidentally touched when the safety lock lever is lowered (unlocked), the machine will suddenly move and cause serious injury or death.**
- **Be careful not to touch the operating levers when raising or lowering the safety lock lever.**
- **Before leaving the operator's seat, lower the working equipment to the ground, raise the safety lock lever to engage the lock and stop the engine. Also, be sure to remove the key, lock the door and covers, take it with you and store it in a specified place.**

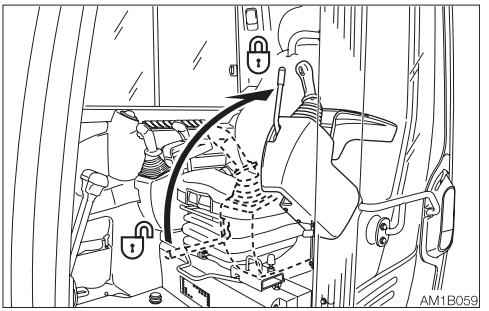

This device is for locking the operations of hoe attachment, slewing, auxiliary, dozer blade and traveling.
When the lever is raised, the lever stand springs up to lock the lever.

OPERATING LEVERS

⚠ WARNING

- **Before starting operation, carefully check which lever pattern you are going to use.**
- **It is described using the ISO pattern in this manual.**

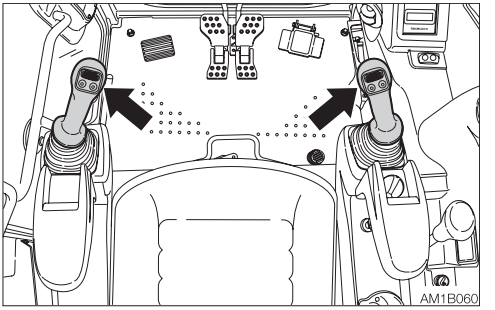

Use these levers to operate the boom, arm, bucket and upperstructure.
Refer to "Lever pattern" on pages 3-6 and 3-7.
Refer to "Operating the working equipment" on pages 3-14 and 3-15.

BLADE LEVER

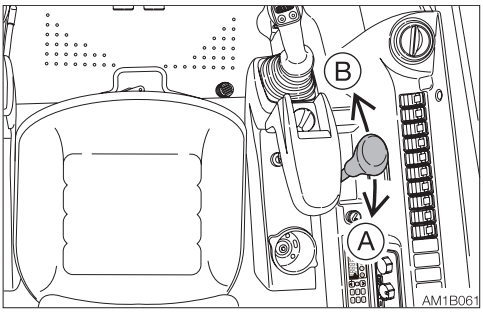

Use this lever to operate the dozer blade.
(A).....Blade up
(B) .....Blade down
Refer to “Operating the dozer blade” on page 3-15.

Machines with the float switch (USA specification)

⚠ WARNING

- **Do not press the float button while the machine is raised by the blade. Doing so will cause the machine to fall. If you must work beneath the raised machine, always use a secure support to keep the machine raised.**
- **Do not press the float button while the blade is raised. Doing so will cause the blade to fall. Lower the blade to the ground before pressing the float button.**
- **Do not travel forward while the blade is in the float mode.**

Float operation

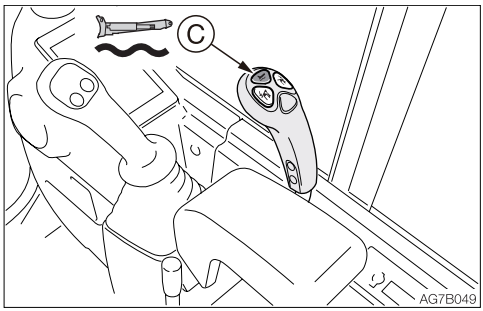

Button (C). Float mode
Press the float button (C) to set the dozer blade to the float mode.
To cancel the float mode, press the float button (C) again. The float mode is temporally cancelled when the blade lever is tilted backward. To return to the float mode, tilt the blade lever back to the neutral position. Take caution when returning to the float mode.

TRAVEL LEVERS/PEDALS

⚠ WARNING

- **Before operating the travel levers/pedals, make sure that the dozer blade is to the front of the operator's seat. Remember that when the dozer blade is to the rear of the operator's seat, the travel levers/pedals must be operated in the reverse direction from when it is to the front.**
- **Do not rest your foot on the pedal unless operating it for traveling. If the pedal is accidentally stepped while working, the machine may suddenly move and cause serious injury or death.**

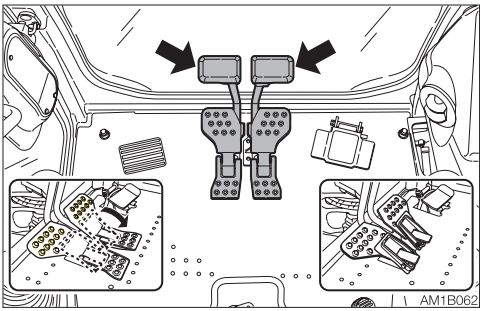

Use these levers/pedals to move forward or backward and to change directions. Fold the pedals when not being used.
Refer to "Operating the travel levers/pedals" on page 3-10.

BOOM SWING PEDAL

⚠ WARNING

Keep the pedal cover to the locked position when not using the pedal. Stepping on a pedal accidentally when it is not locked may cause accidents.

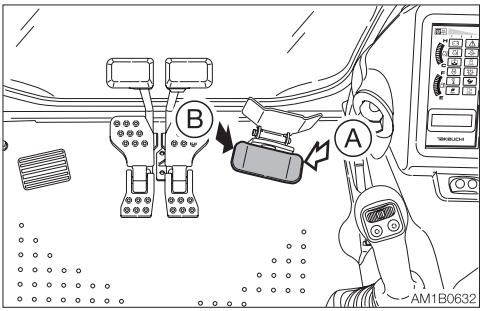

Use this pedal to operate the boom swing. If the 2-piece boom select switch is pressed, the operation will change to the second boom.
(A).....Boom swing right /Second boom lower
(B) .....Boom swing left /Second boom raise
Refer to "Operating the boom swing" on page 3-15.

Pedal lock

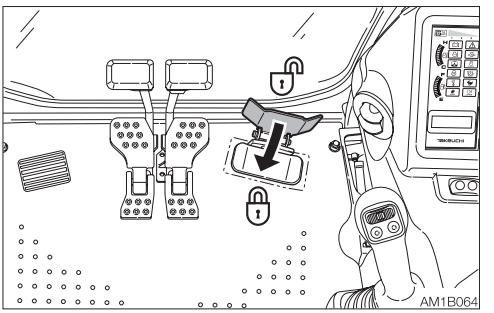

Set the pedal cover over the pedal to lock it. Open the pedal cover from the pedal to unlock it.

ACCESSORIES

AIR CONDITIONER

CAUTIONS ON USE

Ventilate periodically

- When using the air conditioner over an extended period of time, open the windows about once each hour to let in fresh air.
- Your eyes may become irritated if you smoke while using the air conditioner. If this happens, open the windows to let in fresh air. Smoking particularly irritates the eyes when the air conditioner is being used. Since the humidity in the cab drops, the cornea becomes dry.
- If the outside air is dirty, set the air conditioner to the circulation mode.

Always maintain good visibility

Working with dirty windows or fogged windows restricts visibility and is dangerous. Always clean dirt and moisture off the windows before working.

- The windows tend to get foggy when the humidity is high. If this happens, turn on the air conditioner to use outside air and the defroster to get rid of the fog.
- If the air conditioner is set to high when using the defroster, the difference between the external and internal temperatures increases, resulting in frost on the outside of the windows. If this happens, either turn the air conditioner off or turn the temperature control dial clockwise to increase the internal temperature.
- Mist may blow out of the air outlets. This is not a malfunction. When moist air passes through the evaporator on the air conditioner unit, water particles in the air freeze and are emitted as mist.

Do not overcool

For health reasons, the air inside the cab should be kept at a temperature at which you feel a little cool when entering the cab from outside (a difference of 5 to 6°C (9 to 11°F)). Remember to adjust the temperature properly.

Do not turn on the air conditioner until the engine is started

To avoid placing an excessive load on the compressor, wait until the engine is started and is running smoothly before turning on the air conditioner.

Let hot air out first

If the machine has been parked in the sun, open the windows and door to let the hot air out of the cab before using the air conditioner.

Caution on refrigerant (gas)

If the refrigerant comes in contact with skin or eyes, it may cause frostbite or eye damage. Never touch the refrigerant or loosen the parts on the cooling circuit.
If the refrigerant gas leaks, keep flames away.

Off-season inspection

Even off season, run the air conditioner for 3 to 5 minutes at least once a week to maintain oil in the various parts of the compressor.

NAMES OF COMPONENTS

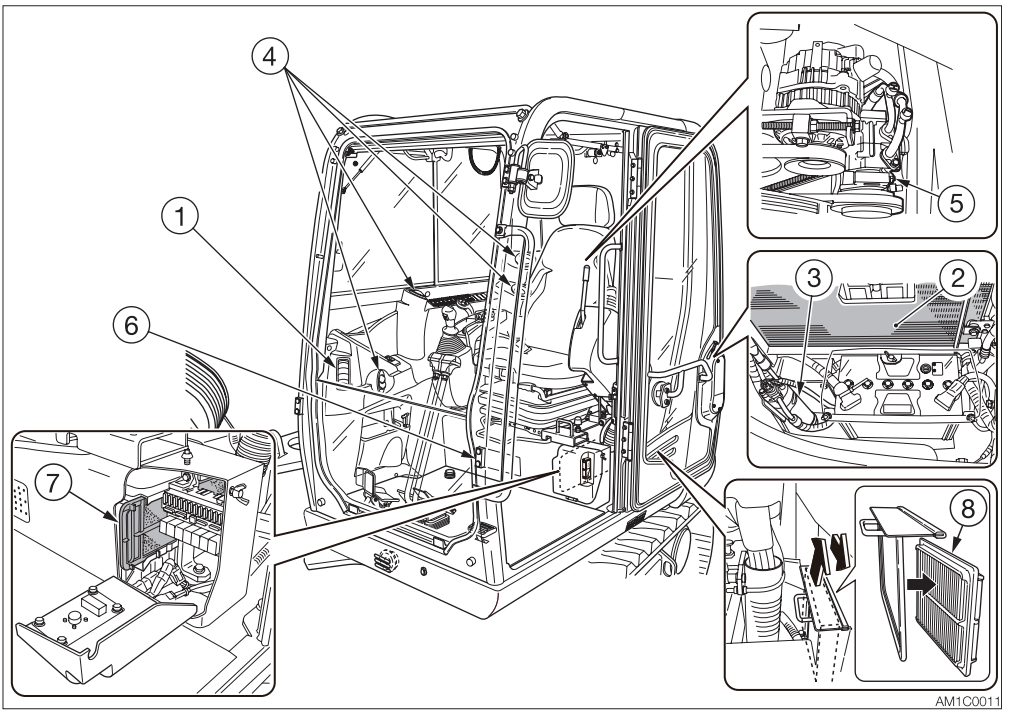

1. Defroster
2. Condenser
3. Receiver dryer
4. Outlets
5. Compressor
6. Air conditioner unit
7. Circulation filter
8. Ventilation filter

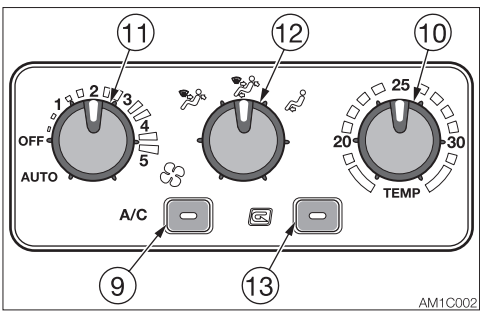

Control panel

9. Air conditioner switch
10. Temperature control dial
11. Fan dial
12. Outlet select dial
13. Ventilation/Circulation select switch

Air conditioner switch

IMPORTANT: To avoid placing an excessive load on the compressor, wait until the engine is started and is running smoothly before turning on the air conditioner.

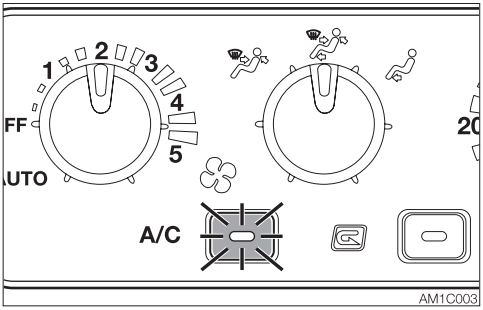

Use this switch to turn on or off the cooling/dehumidifying function. When this switch is pressed while the engine is running with the fan dial set to ON, the lamp lights up and the cooling/dehumidifying function is turned on. Press this switch again or turn the fan dial to OFF to turn off the cooling/dehumidifying function.
Lamp is off ....OFF
Lamp is on ....ON
Note: To prevent leakage of refrigerant gas from the compressor's seal, operate the air conditioner at least once a week, regardless of the season.
Note: The air conditioner will not function if the temperature in the cab is low (3°C (38°F) or lower).

Fan dial

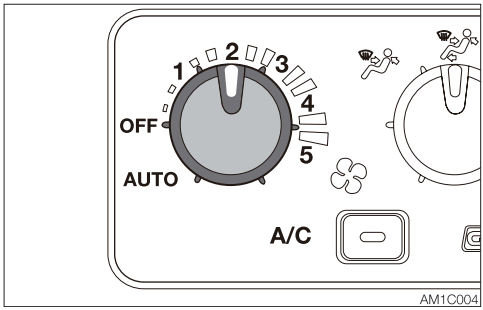

Use this switch to adjust the fan speed in five steps. Turning this switch to the OFF position turns off the air conditioner.
AUTO ..... The airflow rate can be automatically adjusted based on the position of the temperature control dial.
OFF ..... Turning off the fan and the air conditioner.
1 to 5 ..... A larger number indicates larger airflow rate.

Temperature control dial

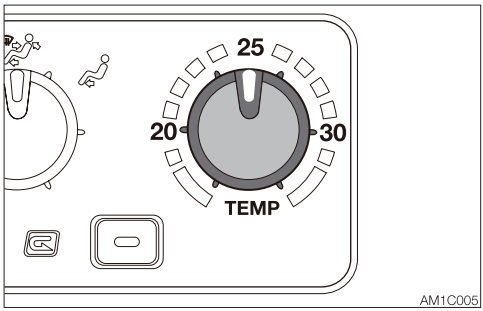

Use this dial to adjust the air temperature. Turn the dial clockwise to increase the temperature. Turn the dial counterclockwise to decrease the temperature.
Note: No warm air is emitted if the temperature of the engine coolant is low.

Outlet select dial

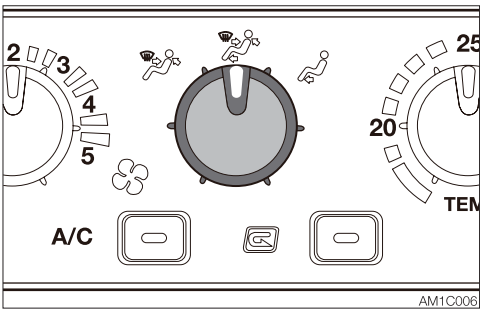

Use this dial to select the desired outlet depending on the purpose of use.
- .....Air comes from the front and rear outlets.
- .....Air comes from the front, rear and foot outlets.
- .....Air comes from the foot outlet.

Arrange the air direction at each outlet.

Ventilation/Circulation select switch

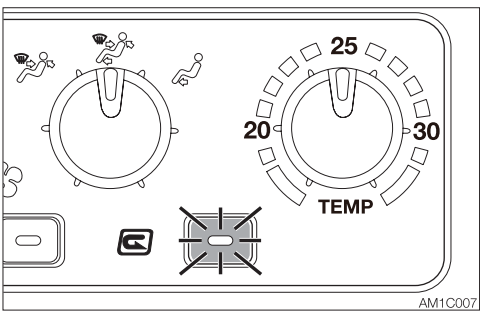

Use this switch to select between Ventilation and Circulation.
Press this switch once to turn on the lamp and set to Circulation. Press this switch again to turn off the lamp and set to Ventilation.
Lamp is on ....Circulation
- Cool or heat the cab quickly
- When external air is dirty

Lamp is off ....Ventilation
- Lets in fresh air
- Removes frosting from the windows
- Ventilates while cooling or heating

Outlets

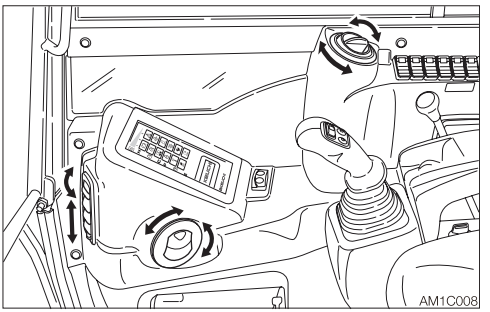

Move the louvers up and down or left and right to adjust the air flow direction and amount.

Operation

Dehumidifying and Heating (in cold climates or when the humidity is high)

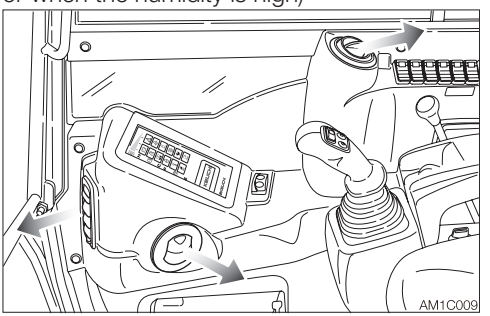

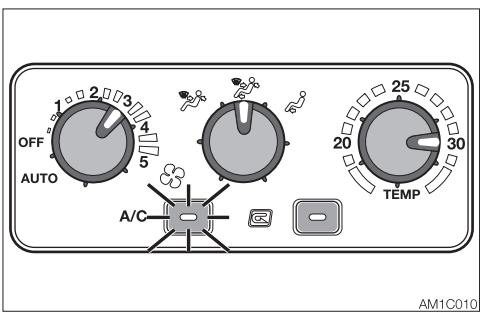

Arrange the foot outlets and the defroster so that they are directed to the front window.
Let the dehumidified warm air blow on the front window, to prevent frosting.

1. Set the desired temperature by turning the temperature control dial to between the center and the right end.
2. Set the fan dial to the desired position.

Cooling

⚠ CAUTION

- **When the air conditioner is set to the circulation mode, the air in the cab gradually becomes dirty. Switch to the "ventilation" to ventilate once a comfortable temperature is obtained.**
- **Excessive cooling can be harmful to your health. It is best to keep the air inside the cab only about 5 to 6°C (9 to 11°F) cooler than the outside air.**
- **If the machine has been parked in the sun, open the windows and door to let the hot air out of the cab before using the air conditioner.**

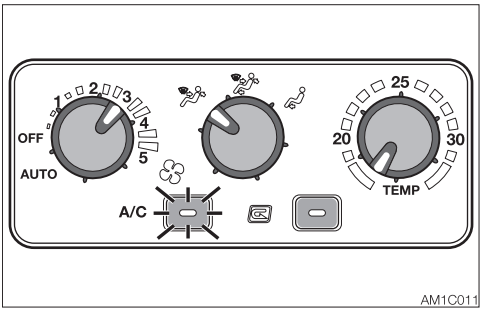

1. Turn the air outlet dial to the FACE or FULL position.
2. Set the desired temperature by turning the temperature control dial to between the center and the left end.
3. Set the fan dial to the desired position.

Quick cooling

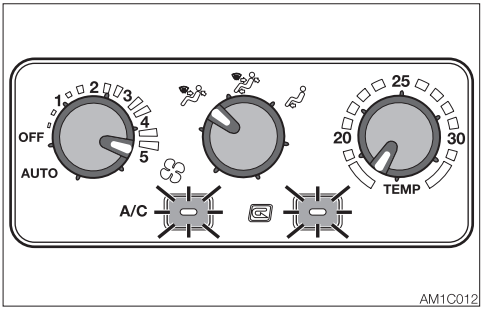

1. Turn the air outlet dial to the FACE or FULL position.
2. Turn the temperature control dial to the left end.
3. Set the fan dial to "5".
4. Press the Ventilation/Circulation select switch to set to circulation.

Heating

1. Turn the air outlet dial to the FOOT position.
2. Set the fan dial to the desired position.
3. Set the temperature control dial to the desired position.
   For the highest temperature, turn the dial all the way to the right.
4. Turn the fan dial to the OFF position to turn off heating.

Defrosting or defogging the windows

Note: If the air conditioner fan is set to High when using the defroster, the difference between the external and internal temperatures increases, resulting in frost on the outside of the windows. If this happens, either turn off the air conditioner or turn the temperature control dial clockwise to increase the internal temperature.

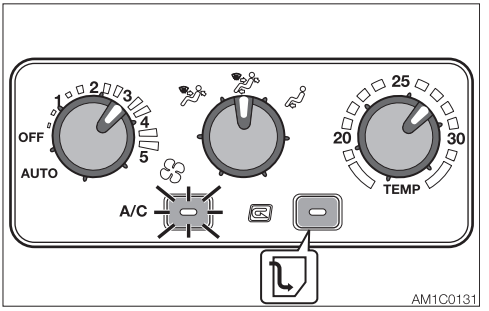

1. Set the desired temperature by turning the temperature control dial to between the center and the right end.
2. Set the fan dial to the desired position.
3. Press the Ventilation/Circulation select switch to set to ventilation.
4. Arrange the foot outlets and the back outlets of the defroster so that they are directed to the front window.

CUP HOLDER

⚠ CAUTION

- **Drinks may be spilled due to vibration when the machine is operating or traveling. Be particularly careful not to burn yourself with hot drinks.**
- **Note that the cigarette lighter or other electric parts may be damaged if drinks are spilled on them.**

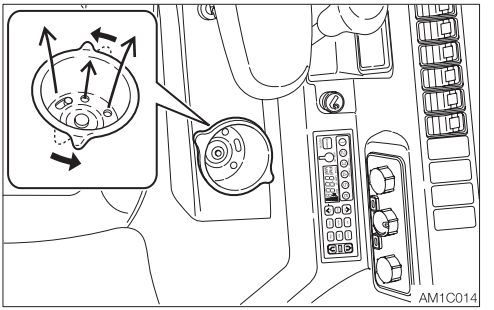

Use to hold cups or bottles.
To warm or cool the cup, turn the cup holder in counterclockwise. Warm or cool wind blows from the bottom of the cup holder.

CIGARETTE LIGHTER

⚠ WARNING

- **Do not leave the cigarette lighter knob pushed in for a long time. Doing so heats up the lighter, and could be dangerous.**
- **If the lighter knob does not pop out 30 seconds after it was pushed in, it may be broken. Pull it out by hand.**
- **Do not use any other cigarette lighters than Takeuchi's. They could be stuck in the middle and not pop out.**
- **Use only those electric products which comply with the specifications of this socket.**
- **Do not touch the metallic parts of the lighter. Doing so could cause burns.**

This is the cigarette lighter and internal power supply socket.
When using, be careful not to exceed 12V/5A.

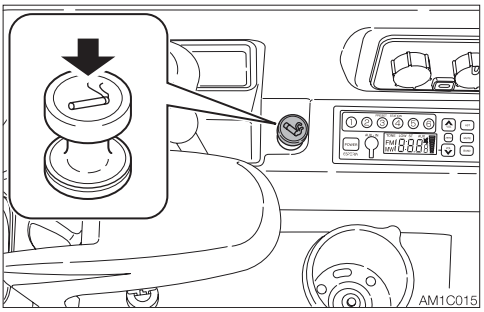

1. Push the lighter in.
2. Release the lighter and wait for it to pop out. The lighter pops out automatically when the heater becomes red hot.
3. Once the lighter pops out, pull it out.

ASHTRAY

⚠ WARNING

- **Be sure to extinguish cigarettes and matches completely before putting them in the ashtray, and close the ashtray after each use.**
- **Do not overfill the ashtray with cigarette butts or put in paper or other easily burnable objects. Doing so could cause fire.**

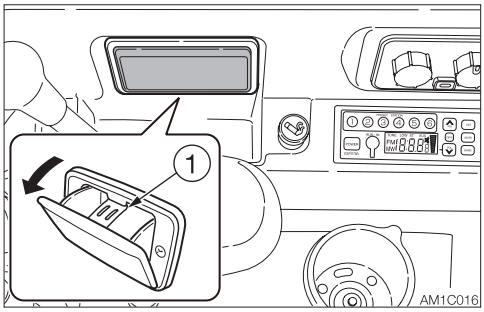

Pull the ashtray out towards you to use it. To clean, press the ash discharge button (1) and pull out the ashtray.

INTERIOR LIGHT

IMPORTANT: The battery capacity decreases if the interior light is left on for a long time when the engine is stopped.

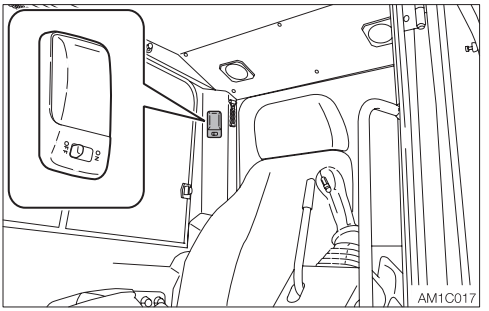

OFF ....Remains off all the time.
ON .....Lights up all the time.

MIRRORS

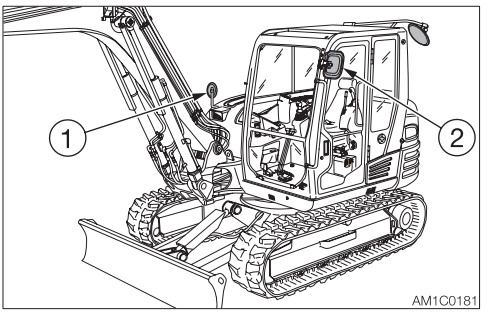

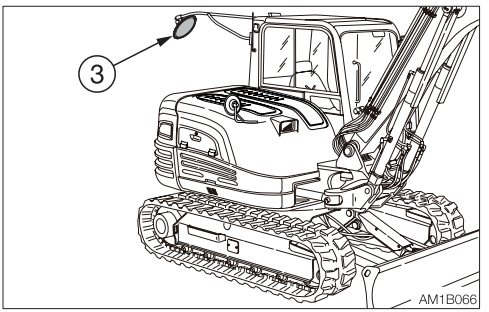

Adjust the rear view mirrors and side view mirrors so that you have a better view.
1. Check the right side view.
2. Check the left side view.
3. Check the rear view.

EXTERNAL POWER SOCKETS

⚠ WARNING

Use only those electric products which comply with the specifications of these sockets.

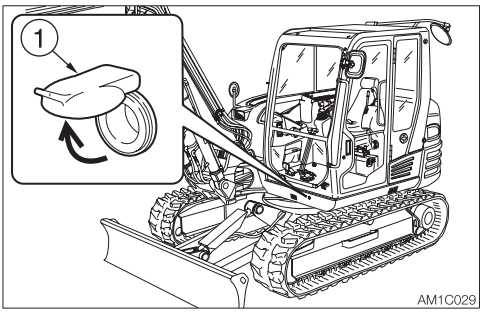

For beacon

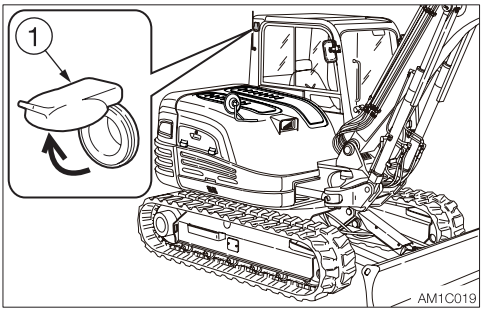

Use these sockets to connect the external power supply. When using, be careful not to exceed 12V/5A.
To use, open the cap (1).

MEMO

RADIO (PRESET BUTTONS ON THE LEFT)

If the radio installed on the machine has preset buttons on the right, refer to “Radio (preset buttons on the right) on page 2-48.

CAUTIONS ON USE

- **To ensure safe operation of the machine, always be sure to keep the volume of the radio down to a level where you can easily hear sounds from outside the machine.**
- **Do not use the radio for a long time when the engine is stopped. Doing so will drain the battery and make it difficult or impossible to restart the engine.**
- **Be careful not to allow water or other liquids to come into contact with the radio. Otherwise, it may result in malfunction.**

NAMES OF COMPONENTS

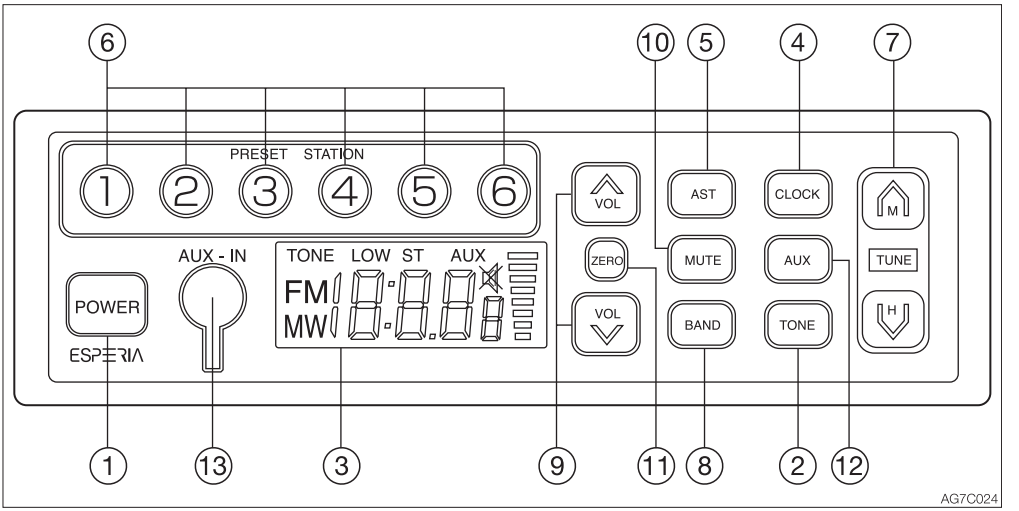

(1) POWER button
Use this button to turn on or off the radio.

(2) TONE control button
Use this button to select the tone. Press the button to select low tone. The TONE LOW display appears on the LCD. Press the button again to select high tone.

(3) LCD
Displays the time/the receiving frequency and the operation mode.

(4) CLOCK button
Use this button to switch between the clock display and the receiving frequency display on the LCD. If this button is not pressed for six seconds while the frequency is displayed, the LCD returns to the clock display.

(5) AST button
Use this button to automatically seek the station information, store it into memory and assign each preset button (1 to 6) a station.

(6) PRESET STATION buttons (1 to 6)
Use these buttons to store station information. Each button can store information on one FM station and one AM station. For how to use these buttons, refer to “Presetting stations”.

(7) TUNE button

Use this button to tune to a radio station. Press and hold this button (⌂ or ⌄) for two seconds or more to start seeking the audible stations. The seeking stops when a station is found. To cancel tuning in progress, press the button again. Pressing the ⌂ button will start seeking stations with higher frequency. Pressing the ⌄ button will start seeking stations with lower frequency. The frequency will continuously be increased/decreased if the ⌂ or ⌄ button is held pressed.

(8) BAND button

Use this button to select FM or AM. The selected band and the receiving frequency will be displayed on the LCD.

(9) VOL buttons

Use these buttons to control the sound volume. Press the button ⌃ to increase the volume and the button ⌄ to decrease the sound volume. Press and hold each button to continuously increase/decrease the volume.

(10)MUTE button

Use this button to temporarily turn off the sound output. If pressed, the “mute is on” mark 🔇 appears on the LCD. Press this button again to cancel mute.

(11)ZERO button

Use this button to set the minute to “00” when it is between “55” to “59” or “01” to “05”.

(12)AUX button

Use this button to choose which to listen to, the radio or the external audio source connected to the AUX-IN. If the external source is chosen, the AUX display appears on the LCD.

(13)AUX-IN jack

Use this jack to connect an external audio source. Pull off rubber cap and plug the stereo mini-plug (3.5 mm) of the external audio device into this jack. Be sure that jack is closed with the rubber cap when not in use.

Playing the radio

1. Turn the starter key to the ACC or ON position, and then press the power button (1) to turn on the radio.
2. Select the band FM or Am with the band button.
3. Select the station with the preset button or the tuning button, and adjust the volume with the volume button.
4. To turn off the radio, press the power button.

Selecting a station-auto select

Press and hold the turn button ⌂ for two seconds or one to start seeking stations in the higher frequencies direction. Press and hold the button ⌄ for two seconds or more to start seeking stations in the lower frequencies direction. The radio will stop seeking when it finds an audible station and start playing.

Selecting a station-manual select

The selection can be done manually. Press the tune ⌂ button to seek stations with higher frequencies. Press the tune ⌄ button to seek stations with lower frequencies.

Presetting stations

1. Select the band (FM or AM) and the station you want to preset.
2. To set the selected station to a preset button, choose the button to be set and then press and hold the button for three seconds or more. The number of the preset button chosen appears on the LCD.
3. For more stations, repeat the steps 1 and 2 above.
   - If the preset button on which a station has been set to is pressed and held for two seconds or more, the preset information will be modified.
   - If the stored information is erased during battery replacement on the vehicle, set the stations again to the preset buttons.
   - Each preset button (1 to 6) can store information on one FM station and one AM station.

AUTO storing

Press the AST button for two seconds or more while playing the radio. The radio starts seeking the audible stations obtained into memory, and assign each preset button (1 to 6) a station.

Note: The previous station setting stored in memory will be overwritten. If the arrangement of the preset buttons to the corresponding stations is not desirable, try the “Presetting stations” described above.

AUX audio connection

- Connect a portable audio player and listen to your favorite music.
- Plug a patch cord (without resistor) into the headphone jack of the audio player.
- Plug a stereo mini plug (3.5 mm) into the AUX-IN jack on the radio.
- To listen to the audio player, press the AUX button. (The AUX display appears and the frequency display is changed to the clock display.)
- To return to the radio, press the AUX button again.
- When connecting, adjust the sound volume level of the audio player so that it is same as that of the radio.
- Adjust the sound volume of the audio player by using the volume control buttons on the radio.
- Do not connect a device with a larger output compared with a portable audio player.

Setting the clock time

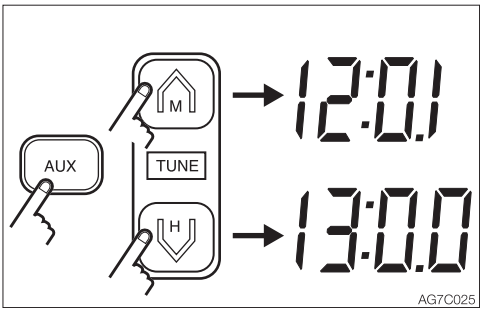

- Be sure that the time is displayed on the LCD. If not, press the AUX button to display the time.
- Use the tune ⌃ button to set the minute. Use the tune ⌄ button to set the hour.
- To set the minute digits to “00” when they are from “55” to “59” or from “01” to “05”, press the ZERO button.

Resetting the radio

If there are any problems, such as the abnormal display of frequency or failure of selection, reset the radio by pressing the "AUX", "VOL (∧)" and "VOL (∨)" button together. (The number "0" is displayed for just a moment to indicate that resetting is done.)

Note: That the memory containing the clock setting and the channel setting is cleared after reset.

SPECIFICATIONS

Power source:	12/24 VDC (negative ground)
Power consumption:	2 A
Maximum output power:	16 W + 16 W (4Ω) (at DC 28.8 V input) 5W+5W (4Ω) (at DC 14.4 V input)
Rated output power:	14 W + 14 W (10% distortion, 4Ω) (at DC 28.8V input) 3.8 W + 3.8 W (10% distortion, 4Ω) (at DC 14.4V input)
Dimensions:	178 (W) x 50 (H) x 92 (D) mm (without projections)
Receiving frequency:	MW (AM) 530 to 1602 kHz (EU, Asia), 1710 kHz (North, Central and South America) FM 87.9 to 108 MHz
Practical sensitivity:	MW (AM) 32 dB or less (S/N 20 dB) FM 12 dB or less (S/N 30 dB)
S/N ratio:	MW (AM) 40 dB or more FM 60 dB or more
AUX IN:	Stereo mini jack (3.5 mm); rated input, 90 mV

Note: Specifications and dimensions may be changed without notice.

RADIO (PRESET BUTTONS ON THE RIGHT)

If the radio installed on the machine has preset buttons on the left, refer to “Radio (preset buttons on the left) on page 2-44.

CAUTIONS ON USE

- **To ensure safe operation of the machine, always be sure to keep the volume of the radio down to a level where you can easily hear sounds from outside the machine.**
- **Do not use the radio for a long time when the engine is stopped. Doing so will drain the battery and make it difficult or impossible to restart the engine.**
- **Be careful not to allow water or other liquids to come into contact with the radio. Otherwise, it may result in malfunction.**

NAMES OF COMPONENTS

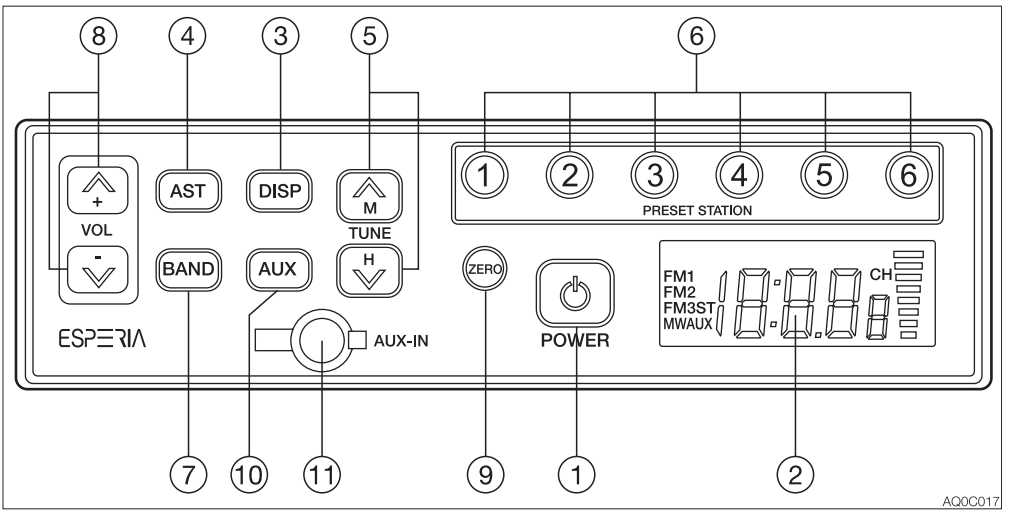

(1) POWER button
Use this button to turn on or off the radio.

(2) LCD
Displays the time/the receiving frequency and the operation mode.

(3) Display button (DISP)
Pressing this button while the frequency is displayed on the LCD changes the display to the clock. Pressing the button again returns to the frequency. If the button is not pressed for five seconds, the display returns to the frequency.

(4) Auto store/Auto seek station (AST)
Press this button to automatically assign receivable radio stations to preset buttons (1 to 6).

(5) Tuning button (TUNE ⏶ ⏷)
Press and hold this button (⏶ or ⏷) for one second or more to start seeking the receivable stations. The seeking stops when a station is found. To cancel tuning halfway, press the button again.
Pressing the TUNE button ⏶ starts seeking stations with higher frequency.
Pressing the TUNE button ⏷ starts seeking stations with lower frequency.
The frequency changes as either button is pressed in one second intervals.

(6) Preset buttons (1 to 6) (PRESET STATION)
Each button can store three FM stations (FM1, FM2, FM3) and one MW (AM) station. For how to set these buttons, refer to “Presetting stations”.

(7) Band button (BAND)
Pressing this button changes the band from FM1 to FM2, FM3 and MW (AM) in this order. The received band and its frequency appear on the display.

(8) VOL buttons
Use these buttons to control the sound volume. Press the button ⏶ to increase the volume and the button ⏷ to decrease the sound volume. Press and hold each button to continuously increase/decrease the volume.

(9) Clock zero set button (ZERO)
Use this button to set the minute to “00” when it is between “55” to “59” or “01” to “05”.
The LCD returns to the frequency display if no more operation is performed for five seconds.

(10) Auxiliary input select button (AUX)
Pressing this button changes the input source to the external device connected to the AUX-IN (11) jack. The display of “AUX” appears on the LCD. Pressing the button again returns to the radio.

(11) Auxiliary input jack (AUX-IN)
Use this jack to connect an external audio source such as a portable music player. Pull off the rubber cap and connect the output terminal (headphone jack) of the portable player to the AUX-IN with the stereo mini-plug (3.5 mm) cord. Be sure that jack is closed with the rubber cap when not in use.

Playing the radio
1. Turn the starter key to the ACC or ON position, and then press the power button (1) to turn on the radio.
2. Select the band, FM or MW (AM) by pressing the BAND button.
3. Select the station with the preset button or the tuning button, and adjust the volume with the volume button.
4. To turn off the radio, press the power button.

Selecting a station-auto select
Press and hold the TUNE button ⏶ for one second or more to start seeking stations in the higher frequencies direction. Press and hold the TUNE button ⏷ for one second or more to start seeking stations in the lower frequencies direction. The radio will stop seeking when it finds an receivable station and start playing.

Selecting a station-manual select
The selection can be done manually. Press the tune ⏶ button to seek stations with higher frequencies. Press the tune ⏷ button to seek stations with lower frequencies.

Presetting stations

1. Press the BAND button to select a band (MW (AM) or FM), and then select the station by pressing the TUNE button for seeking.
2. To assign the selected station to a preset button, press and hold the button to be assigned for one second or more. The number of the preset button appears on the LCD.
3. For more stations to preset, repeat the steps 1 and 2 above.
   - If the preset button on which a station has been assigned is pressed and held for one second or more, the preset information will be modified.
   - If the stored information is erased during battery replacement on the vehicle, assign the stations again to the preset buttons.
   - Each preset button (1 to 6) can store three FM stations (one from each FM1, FM2, FM3) and one AM station.

Auto storing (AST)

Press the AST button while playing the radio. The radio automatically starts seeking the receivable stations within the band currently selected and assign each preset button (1 to 6) a station.

Note: The previous stations stored will be cleared (cancelled) by the auto storing. If the station stored in the preset button is not desirable, try to preset the station manually.

Auxiliary input (AUX)

- Connect a portable audio player and listen to your favorite music.
- Plug a patch cord (without resistor) into the headphone jack of the audio player.
- Plug a stereo mini plug (3.5 mm) into the AUX-IN jack on the radio.
- To listen to an external portable audio player, press the AUX button. (The “AUX” display appears on the LCD and the frequency display is changed to the clock display.)
- To return to the radio, press the AUX button again.
- When connecting, adjust the sound volume level of the audio player so that it is same as that of the radio.
- Adjust the sound volume of the audio player by using the volume control buttons on the radio.
- Do not connect a device with a larger output compared with a portable audio player.

Setting the clock

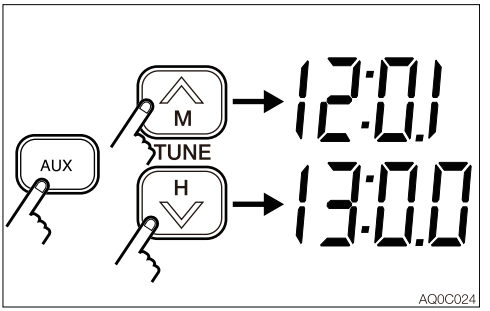

- If a frequency is displayed on the LCD, press the AUX button (auxiliary input) to display the clock.
- Use the tune ⏶M button to set the minute. Use the tune ⏷H button to set the hour.
- To set the minute digits to “00” when they are from “55” to “59” or from “01” to “05”, press the ZERO button.

Resetting (North, Central and South America)

If there are any problems, such as the abnormal display of frequency or failure of selection, reset the radio by pressing the “3” button* while pressing the AST button and the AUX button together. Then, “US”** and the clock display appear on the LCD, indicating that the radio is turned off. Note that the memory stored in the preset button is cleared.

* : “6” button – (Europe, Asia, Oceania)
“5” button – (China)

** : EU – (Europe, Asia, Oceania)
CH - (China)

Switching the volume mode when the radio is on

Switch the modes between SU and FI by pressing the (1) button while pressing the AST and AUX buttons together, when the radio is on.

The SU or FI display appears on the LCD, followed by the radio turning off by itself.

SU mode: .....The volume at power-off is retained.

FI mode: .....The volume at power-off is reset.

SPECIFICATIONS

Power source: .... 12/24 VDC (negative ground)

Maximum power consumption: ..... 3A or less (at max. volume, 24 V)

Maximum output power: ..... 16 W + 16 W (4Ω) (at 28.8 VDC input)
5W+5W (4Ω) (at 14.4 VDC input)

Rated output power: ..... 12 W + 12 W (10% distortion, 4Ω) (at 28.8 VDC input)
3.5 W + 3.5 W (10% distortion, 4Ω) (at 14.4 VDC input)

Dimensions:..... 178 (W) x 50 (H) x 65 (D) mm (excluding protrusions)

Receiving frequency: ..... MW (AM) 531 to 1602 kHz (Europe, Asia), 530 to 1710 kHz (North, Central and South America)
FM 87.5 to 108 MHz (Europe, Asia), 87.9 to 108 MHz (North, Central and South America)

Practical sensitivity: ..... MW (AM) 32 dB or less (S/N 20 dB)
FM 12 dB or less (S/N 30 dB)

S/N ratio:..... MW (AM) 40 dB or more
FM 50 dB or more

AUX-IN: ..... Stereo mini jack (3.5 mm); rated input, 90 mV; 20 kΩ impedance

Note: Specifications and dimensions may be changed without notice.

AUXILIARY HYDRAULIC LINES

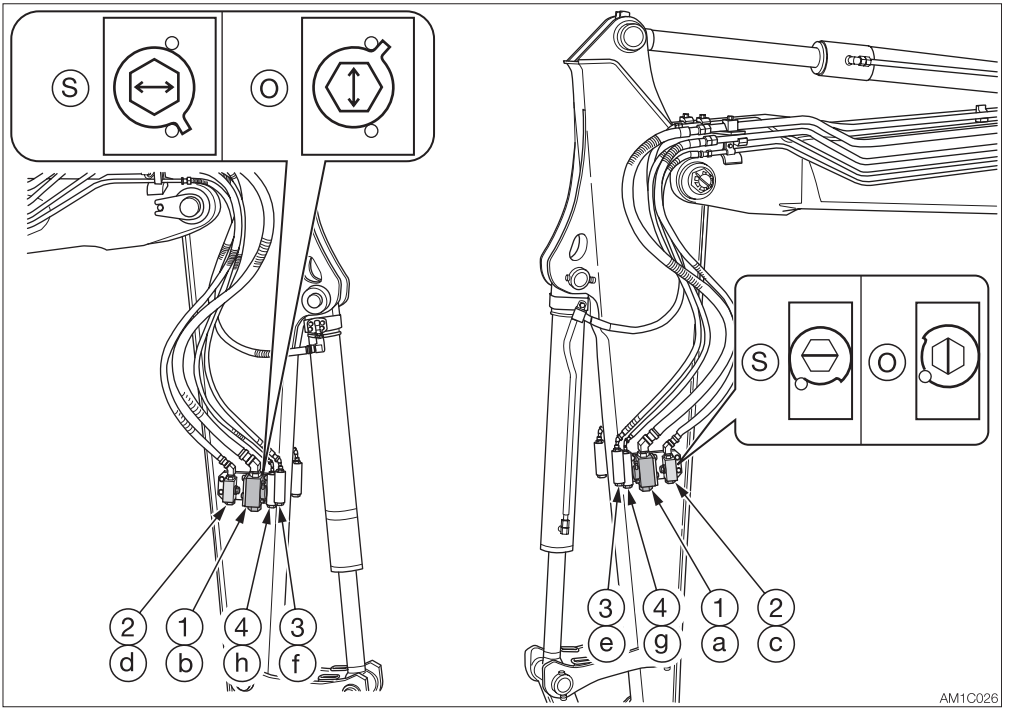

⚠ WARNING

Oil may spurt out if pipes disconnected before releasing the pressure in the hydraulic system.

- **Immediately after the engine is stopped and while the safety lock lever is still in the unlock position, turn the starter switch to ON and press each auxiliary hydraulic switch several times to release the pressure from the auxiliary hydraulic circuit.**
- **Press the air breather button to relieve the tank pressure.**
- **When disconnecting hoses, stand to the side and loosen them slowly to gradually release the internal pressure before removing.**

These lines deliver the hydraulic oil necessary for operating a hydraulic breaker, crusher or other attachments.

(1).....First auxiliary hydraulic lines
(2).....Second auxiliary hydraulic lines
(3).....Third auxiliary hydraulic lines
(4).....Fourth auxiliary hydraulic lines

Stop valve
(S) : Closed
(O) : Open

Connecting the hydraulic circuits

To connect the attachment hydraulic lines, observe the following procedures:

1. Release the pressure remaining in the lines, and then close the stop valve. Refer to “Releasing the residual pressure” on page 2-54.
2. Remove the plugs.
3. Connect the attachment hydraulic lines to ports (a/c) and (b/d). When installing a hydraulic breaker, connect the supply circuit to the port (a) and the return circuit to port (b).
4. Open the stop valves. When installing a hydraulic breaker, open the selector valve (1). Refer to “Selector valve” on page 2-55.
5. When connecting is complete, purge air from the hydraulic lines.
   a. Start the engine and run it at a low idle speed with no load for 10 minutes.
   b. With the engine running in low idle, operate the auxiliary hydraulic switches repeatedly (approx. 10 times) to purge air from the hydraulic lines.
   c. Stop the engine and wait for at least 5 minutes until bubbles escape from the hydraulic oil in the tank.

IMPORTANT: Follow the procedures for purging air as instructed by the attachment manufacturer, if applicable.

6. Check for oil leaks.

Disconnecting the hydraulic circuits

1. Release the pressure remaining in the lines, and then close the stop valve. Refer to “Releasing the residual pressure” on page 2-54.
2. Disconnect the lines from the ports (a/c) and (b/d).
3. Install the plugs.

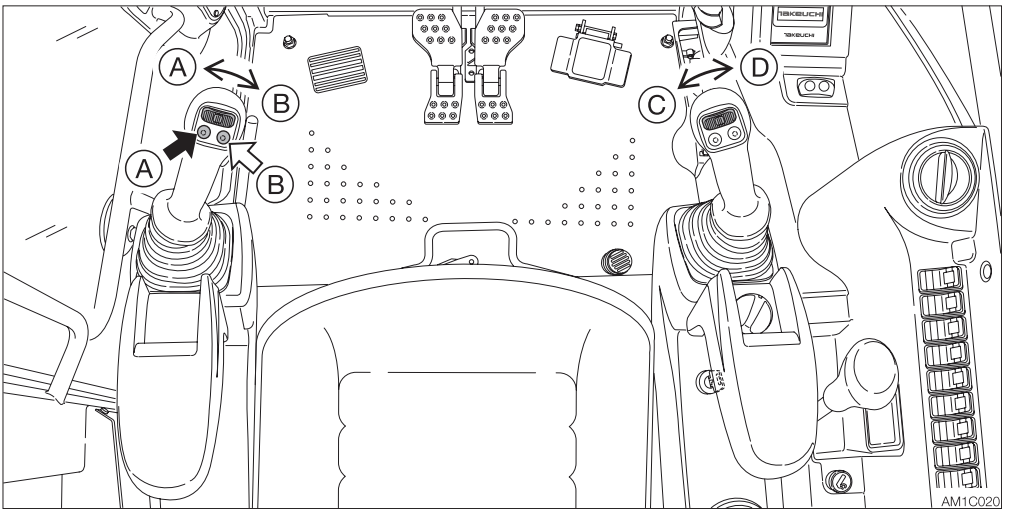

Operating

Press those buttons to control the flow of the oil in the first/second auxiliary hydraulic lines.

(A).....Hydraulic oil flows to left auxiliary line (a).

(B) .....Hydraulic oil flows to right auxiliary line (b).

(C) .....Hydraulic oil flows to left auxiliary line (c).

(D) .....Hydraulic oil flows to right auxiliary line (d).

Releasing the residual pressure

After the auxiliary hydraulic circuits have been used, pressure remains in the circuits. This is called the residual pressure. Release this residual pressure before disconnecting the lines.

Perform the residual pressure releasing within 10 minutes after the engine stopping.

1. Park the machine on a flat, rigid and safe ground.
2. Stop the engine.
3. Lower the safety lock lever to the unlocked position.
4. Turn the starter switch to the ON position.
5. Press the auxiliary hydraulic switches several times to release the residual pressure in the auxiliary hydraulic circuitry.

Selector valve

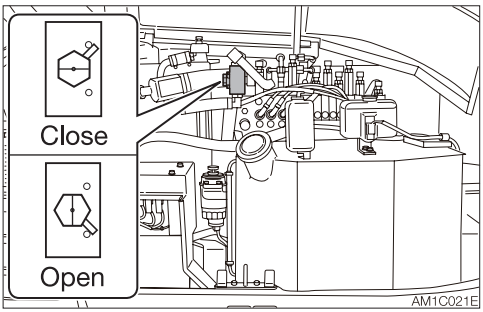

Open ..... When using a hydraulic breaker (1-way flow)
Closed..... When using a reversible attachment (2-way flow)

Change the direction of the hydraulic oil flow by opening or closing the selector valve (1) inside the fuel lid.
For the machine with the auxiliary 1st auto tank switch, use the switch to select the flow. Refer to “Auxiliary 1st auto tank switch (If equipped)” on page 2-31.

Third auxiliary hydraulic switch and button

IMPORTANT: The specifications of the third auxiliary service differ depending on the machine used (the pipe (e) is high- or low-pressure type). Install the attachment that meets the specifications. For details on the specifications of the third auxiliary service, contact your sales or service dealer.

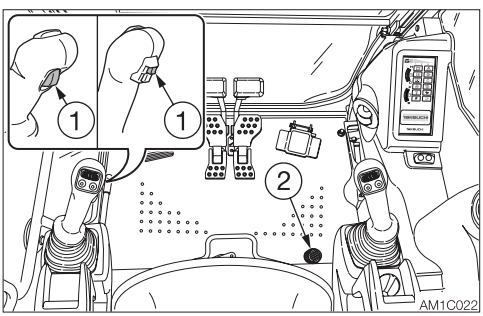

The third auxiliary hydraulic lines are normally used to control the “quick attachment” installed to connect/disconnect the bucket.

When the engine is started, hydraulic oil flows into the pipe (e). This allows the pressure in the (e) side to increase and to prevent the pin inserted on the bucket from coming out. If the pressure in the (e) side drops, the alert that the bucket may come out is indicated by the warning lamp and the alarm. For a safety reason, the bucket can be disconnected only when the button (1) and the switch (2) are pressed at the same time. When they are pressed, the hydraulic oil flows into the line (f) to increase the pressure there. As the result, the pin on the bucket comes out and the bucket is removed from the machine.

- Bleeder unit for simultaneous use with the auxiliary 1st and 2nd (If equipped)
  Pressing both the auxiliary 3rd button (1) and the switch (2) makes it possible to release internal pressure from the auxiliary 3rd (e side), auxiliary 1st and auxiliary 2nd at the same time. (The pressure is kept drawn for six seconds after the button and the switch are released.) This enables faster attachment change.

Third auxiliary hard-lock switch (If equipped)

IMPORTANT: For handling of the attachment, follow the instructions provided in the attachment manual.

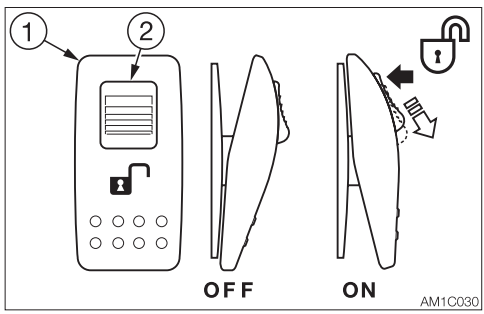

The third auxiliary hard-lock switch should be installed in the third auxiliary if the attachment to be installed on the piping of the third auxiliary is capable of hard locking.
When operating the third auxiliary, this switch is used.
The third auxiliary is mainly used to control the “quick attachment” that connects/disconnects the bucket.

After the engine is started, hydraulic oil flows into the pipe (e) if the switch is off. This allows the pressure in the (e) side to increase, preventing the pin inserted into the bucket from coming off.
When the switch is turned on by pressing the switch (1) while pulling the orange portion (2), the warning lamp starts flashing. The hydraulic oil flows into the line (f) to increase the pressure there. As a result, the pin on the bucket comes off and the bucket is removed from the machine.

Third auxiliary hydraulic warning lamp

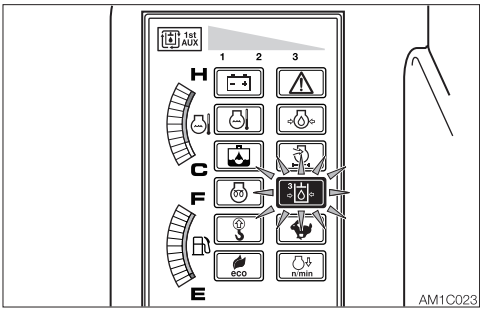

This lamp illuminates and an alarm sounds when the third auxiliary hydraulic pressure drops abnormally, when the safety lock lever is fully lowered to the unlocked position while the engine is running.
For the machine with the hard lock feature, the lamp lights up and an alarm is sounded only when the third auxiliary hard-lock switch is turned on.

Auxiliary 2/4 select button

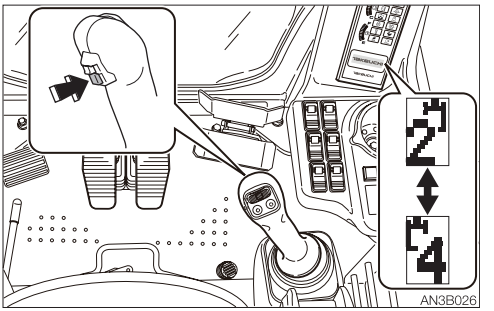

This button is used to change from the second auxiliary operation to the fourth auxiliary operation.
Pressing this button displays the second auxiliary on the LCD to indicate that the second auxiliary operation is enabled.
Pressing this button again displays the auxiliary 4th on the LCD to indicate that the auxiliary 4th operation is enabled.
The actual operation is performed with the auxiliary 2nd/4th switch (slider switch).
Refer to “Auxiliary 2nd/4th switch” on page 2-26.

Setting the flow rate

The flow rate in the auxiliary 1st, 2nd and 4th can be set to the desired values.
For details, refer to “Auxiliary 1st-1 setting information” on page 2-20.
IMPORTANT: The set values are not the guaranteed values. They should be used as rough guides.

OPERATING THE MACHINE WITH AN ACCUMULATOR

⚠ WARNING

Be sure to handle the high-pressure nitrogen gas enclosed in the accumulator with care. If handled incorrectly, it could explode and cause serious injury. Strictly observe the following precautions:

- **Do not disassemble.**
- **Do not allow flame near or throw it into a fire.**
- **Do not drill, weld or fuse.**
- **Do not subject it to physical shock such as hitting, rolling or dropping.**
- **Before disposing of the unit, the sealed gas must be drained. Contact a Takeuchi service agent for help.**

For a machine with an accumulator, the residual pressure in the auxiliary hydraulic circuit or the working equipment circuit can be released even after the engine is stopped.

Releasing residual pressure

Residual pressure refers to the pressure that remains in the hydraulic circuit after the operation. Release the residual pressure as necessary by using the following steps. Perform the residual pressure releasing within 10 minutes after the engine stopping.

1. Return the throttle controller to idle the engine at low speed.
2. Lower the bucket and dozer blade to the ground.
3. Check that the safety lock lever is in the released position.
4. Stop the engine.
5. Turn the starter switch to the ON position.

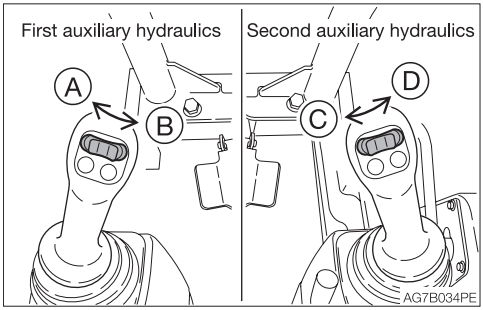

6. Move or press the auxiliary hydraulic switches several times to release the residual pressure in the circuitry.
7. Move all the control levers and pedals several times in all directions to release the pressure from the working equipment circuitry.
8. Raise the safety lock lever to engage the lock.

Lowering the boom when the engine has stopped

Perform this operation within 10 minutes after the engine stopping.

1. Sit at the operator's seat.
2. Turn the starter switch to the ON position.
3. Lower the safety lock lever to the unlock position
4. Slowly push the operating lever forward to lower the boom.

LOAD SAFETY DEVICE (IF EQUIPPED)

The load safety devices include an emergency shut-off valve and an overload warning device.

Emergency shut-off valve

⚠ WARNING

- **If the boom or arm stops due to the breakage of hose, immediately move away from the load being lifted and go to a safe location.**
- **If the emergency shut-off valve hose breaks, immediately stop operation.**
- **Since the emergency shut-off valve (1) and (2) is a safety device, you must not disassemble it and/or replace or adjust its internal part. Takeuchi shall not be held responsible for any injuries, accidents or product malfunction caused by disassembly.**

The emergency shut-off valve (1) and (2) prevents the boom or arm from falling rapidly in case the hydraulic hose is broken.

Boom

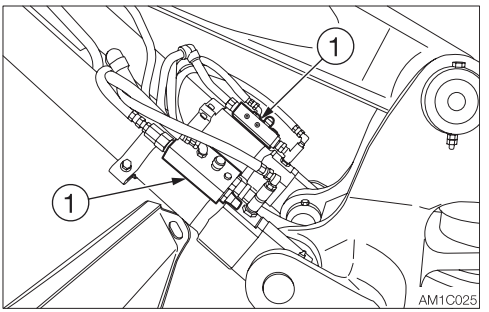

2-Piece boom

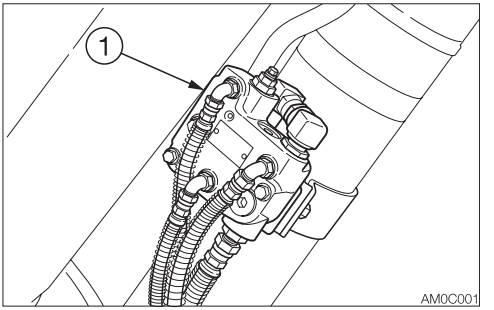

Second boom

<Type A>

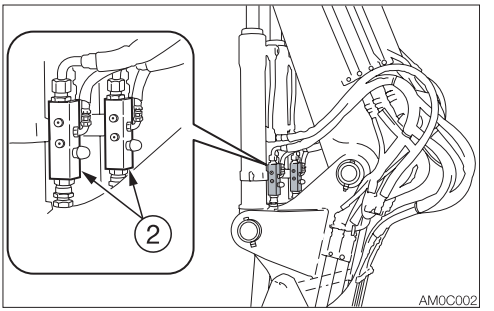

<Type B>

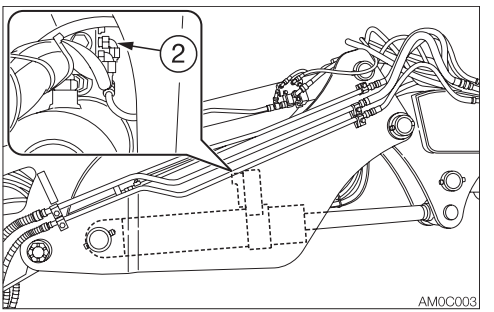

Arm (option)

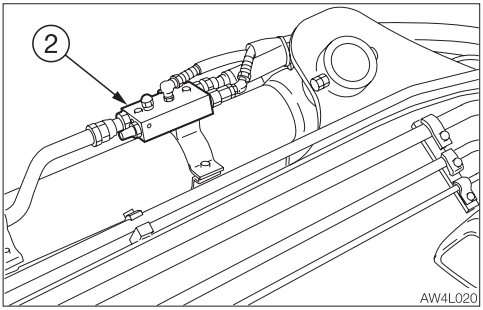

If the hose breaks and the emergency shut-off valve (1) or (2) is activated to stop the operation of boom or arm, lower the boom or arm by slowly operating the lever while ensuring safety. Ask your sales or service dealer for repair.

OVERLOAD WARNING DEVICE

⚠ WARNING

If the overload is not removed after the overload warning horn is sounded, the machine may tip over. If the horn starts sounding, stop operating the machine and lighten the load.

If a weight greater than the lifting capacity is applied or lifted, the overload warning device is activated and the horn sounds. (When the lift overload warning switch is turned on.)

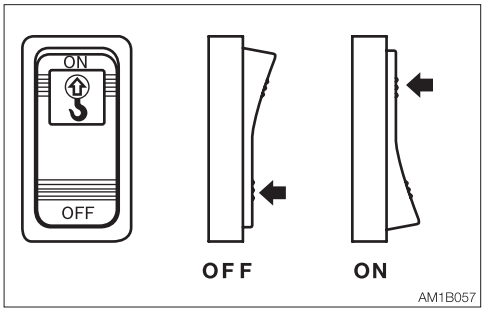

Lift overload warning switch
OFF ....Off
ON .....On

FUEL SUPPLY PUMP

⚠ DANGER

Do not use the fuel supply pump for gasoline or hydraulic oil. Doing so could result in explosion or damage.
Only use the fuel supply pump for diesel fuel.

⚠ CAUTION

Do not fill the tank with additional fuel after the fuel supply pump stops.
Doing so could cause the fuel to spurt out.

This device automatically supplies fuel to the fuel tank and stops automatically when the fuel tank is full.

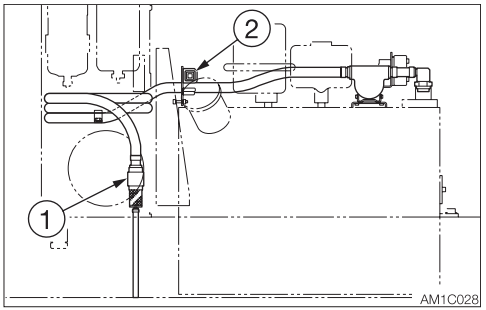

1. Open the side cover.
2. Insert the pump's nozzle (1) in the fuel supply tank.
3. Press the switch (2).
   The pump stops automatically once the fuel tank is full.

Note: To stop filling at a desired level, press the switch (2).

4. Store the nozzle.

OPERATION



BEFORE STARTING OPERATION

GETTING ON OR OFF THE MACHINE

⚠ WARNING

- **Do not jump on or down from the machine. Never attempt to get on or off the moving machine.**
- **When getting on or off the cab, first fully open the door to the locked position and check that it does not move.**

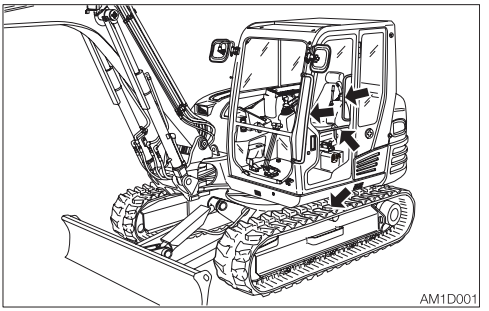

- **Climb up/down the steps holding the handrail to support your weight in a three point secure stance (hand and feet).**
- **Never use the safety lock lever or control levers as hand holds.**

WALK-AROUND INSPECTION

Perform the walk-around inspections once a day before starting the engine for the first time that day.
Refer to “MAINTENANCE, Walk-around inspection”, on pages 5-16 and 5-17.

DAILY INSPECTION

Perform the daily inspections once a day before starting the engine for the first time.
Refer to “MAINTENANCE, Daily inspection”, on pages 5-18 to 5-23.

STARTING AND STOPPING THE ENGINE

BEFORE STARTING THE ENGINE

1. Adjust the seat for a comfortable operating position.
2. Fasten the seat belt.

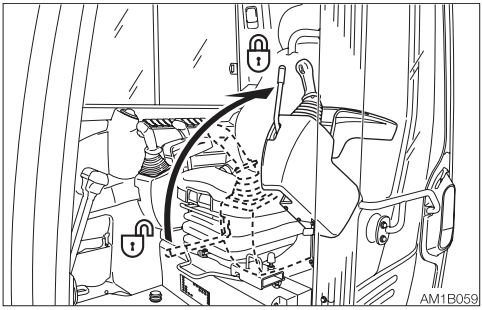

3. Check that the safety lock lever is in the locked position.

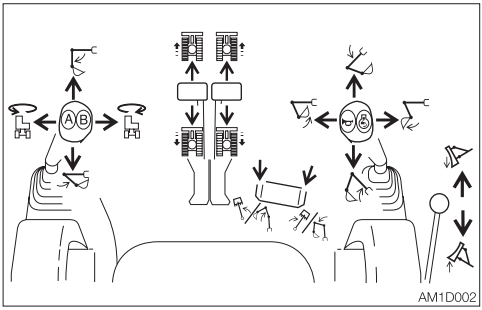

4. Check that all levers and pedals are in the neutral position.

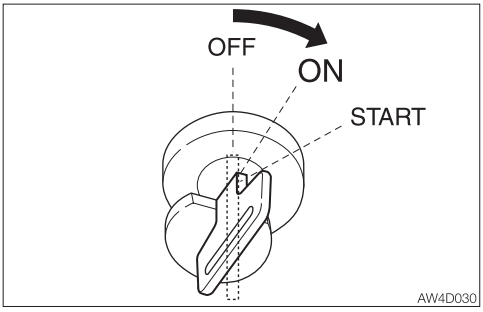

5. Insert the key into the starter switch, turn it to the ON position, then perform the following inspections:

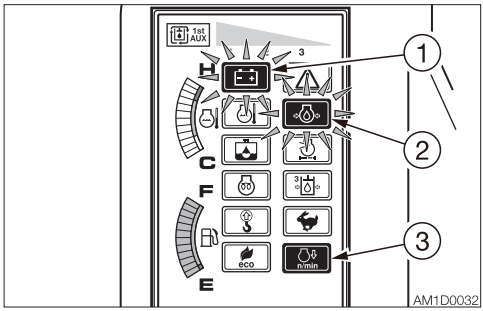

- All warning lamps flash and an alarm is sounded for two seconds. The meters also start functioning. After two seconds, the deceleration lamp (3) stops flashing and remains lit, while the battery charge warning lamp (1) and engine oil pressure warning lamp (2) remain flashing. (If the auxiliary 3rd is selected, it is also flashing.) The other lamps go out.
- Turn on the light switch to check if the boom light, front light, side lights, tail lamps and meter light turn on.
- Check the fuel level.

If a lamp does not light or the alarm is not sounded, the bulb may be burnt out or a wire may be damaged. Ask a Takeuchi service agent for repair.

STARTING THE ENGINE

⚠ WARNING

- **Clear all personnel from the work area.**
- **Sound the horn to warn people around the machine.**

IMPORTANT: Do not run the starter motor for more than 15 consecutive seconds. If the engine fails to start, wait for 30 seconds, and then try again to start the engine.
IMPORTANT: If the engine stalls due to fuel shortage, add fuel, turn the key to the ON position for 60 seconds, and then turn it to the START position. Running the starter for a long time before there is enough fuel is going through can cause the starter to fail.

Normal starting

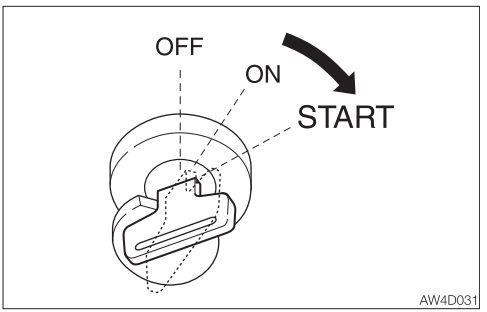

1. Turn the starter key to the START position and start the engine.
2. Once the engine starts, release the key. The key automatically returns to the ON position.
3. Check that the warning lamps are off.
   For safety reasons, it is designed that the deceleration function is activated to set the engine revolutions to low idling whenever the engine is started.
   Cancel the deceleration mode by pressing the deceleration button as necessary.
4. Warm up the engine.
   Refer to “Warming up the engine” on page 3-5.
5. After the completion of the warming up, press the deceleration button to cancel the deceleration mode.

Starting in cold climates

⚠ WARNING

Never use starting fluid on this engine, as the starting fluid could cause an explosion.

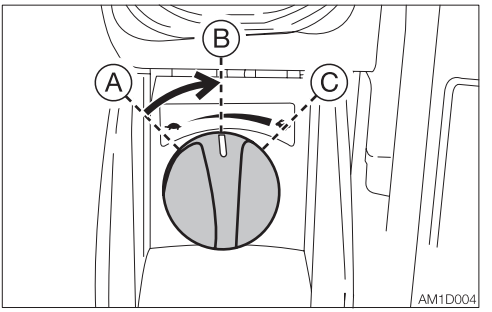

1. Turn the throttle controller to the middle position.

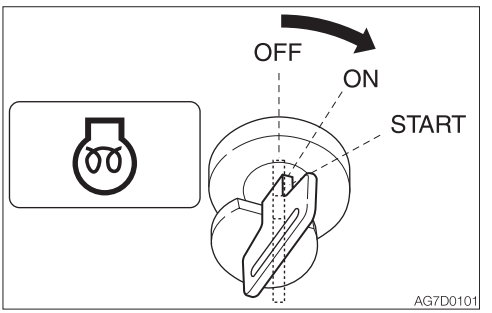

2. Turn the starter key to the ON position, and confirm that the glow lamp is lit. (When the coolant temperature is –10°C (14F°), the glow lamp stays lit for 15 seconds (TB285), 12 seconds (TB290, machines of 190000941 or later) or 2 seconds (TB290, machines up to 190000940).)
3. After the glow lamp goes out, press the deceleration button (to cancel the deceleration mode), and then turn the key to the START position to start the engine.
4. Once the engine starts, release the key. The key automatically returns to the ON position.

5. Check that the warning lamps are off.
6. Return the throttle controller to the original position and warm up the engine.
   Refer to “Warming up the engine”.

Note: The glow lamp turns on if the coolant temperature is low after the engine is started.

WARMING UP THE ENGINE

IMPORTANT: Do not accelerate the engine and run it without load until the engine warm up is complete.
Do not warm up the engine for a long time (20 minutes or more). When idling is required, occasionally place a load or run the engine at medium speed.

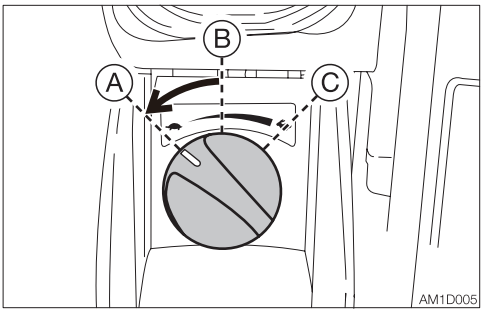

1. Return the throttle controller, and then run at a low idle with no load for 5 minutes.

STOPPING THE ENGINE

IMPORTANT: Do not stop the engine suddenly when operating with heavy loads or at the maximum speed. Doing so may cause the engine to overheat or seize. Never stop running the engine suddenly except in emergency.

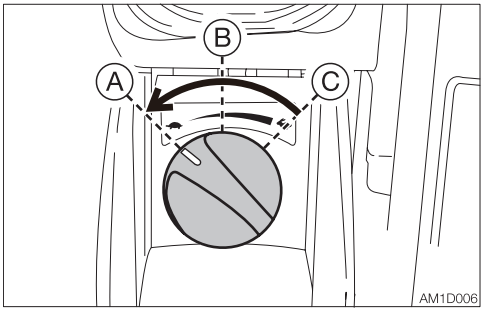

1. Return the throttle controller.
2. Idle the engine for about 5 minutes to gradually let it cool.

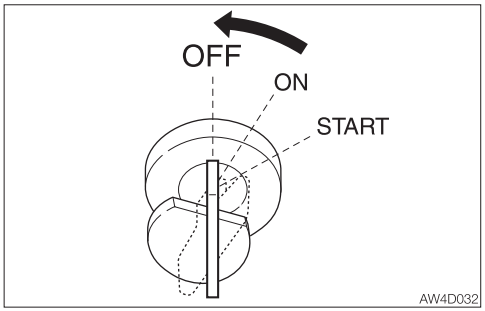

3. Turn the starter key to the OFF position to stop the engine.

OPERATING THE MACHINE

LEVER PATTERN (ISO PATTERN)

⚠ WARNING

- Before starting operation, carefully check which lever pattern you are going to use.
- It is described using the ISO pattern in this manual.

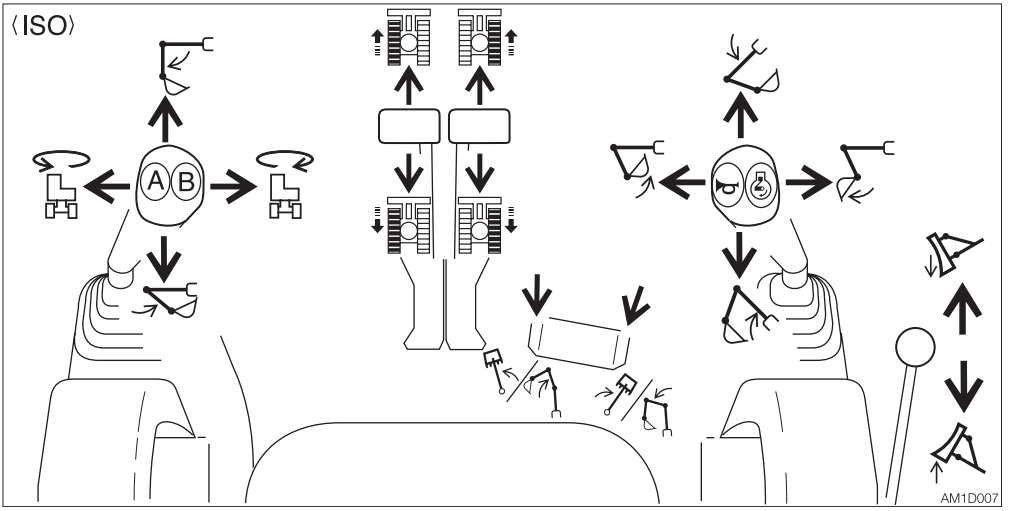

	Left crawler forward		Right crawler forward
	Left crawler reverse		Right crawler reverse
	Arm out		Boom lower
	Arm in		Boom raise
	Upperstructure slew left		Bucket load
	Upperstructure slew right		Bucket dump
	Boom swing left Second boom raise (2-piece boom)		Dozer blade lower
	Boom swing right Second boom lower (2-piece boom)		Dozer blade raise

LEVER PATTERN (G PATTERN) (IF EQUIPPED)

⚠ WARNING

- **Before starting operation, carefully check which lever pattern you are going to use.**
- **It is described using the ISO pattern in this manual.**

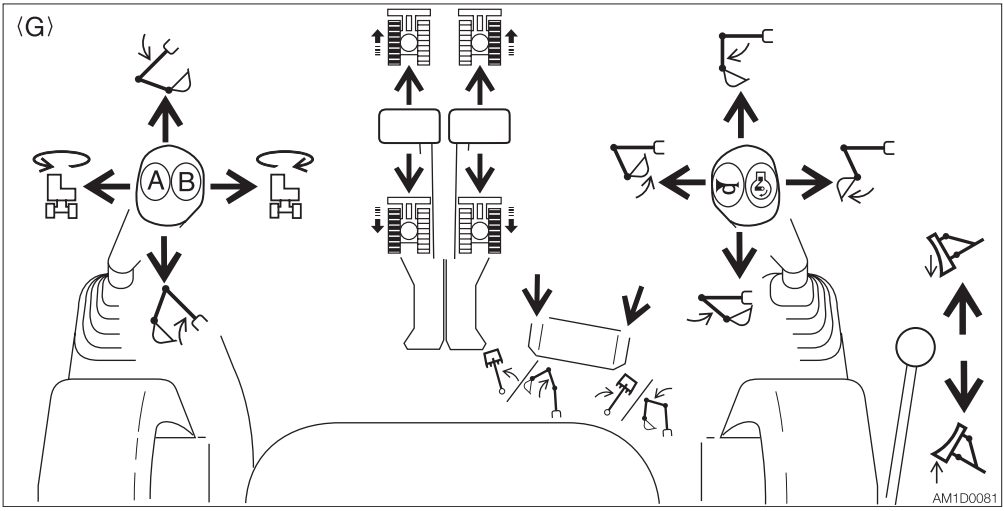

	Left crawler forward		Right crawler forward
	Left crawler reverse		Right crawler reverse
	Boom lower		Arm out
	Boom raise		Arm in
	Upperstructure slew left		Bucket load
	Upperstructure slew right		Bucket dump
	Boom swing left Second boom raise (2-piece boom)		Dozer blade lower
	Boom swing right Second boom lower (2-piece boom)		Dozer blade raise

Refer to “Selecting a lever pattern” on page 8-5.

WARMING UP THE MACHINE (HYDRAULIC OIL)

⚠ WARNING

Operating the working equipment without warming up the machine (hydraulic oil) is dangerous, as the working equipment cannot response to controls quickly or may move in unexpected ways, and the safety devices may not operate properly. Be sure to sufficiently warm up the machine.

IMPORTANT: Do not operate the levers too quickly when the hydraulic oil temperature is below 20°C (68°F). The proper hydraulic oil temperature during operation is 50 to 80°C (122 to 176°F). If operations must be performed at lower temperatures, heat up the hydraulic oil to at least 20°C (68°F).

Normal warm-up

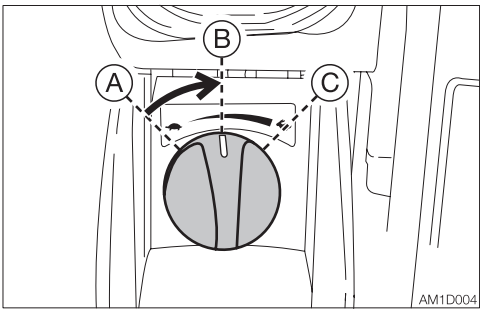

1. Turn the throttle controller to the middle position, and then run the engine at medium speed for about five minutes with no load.

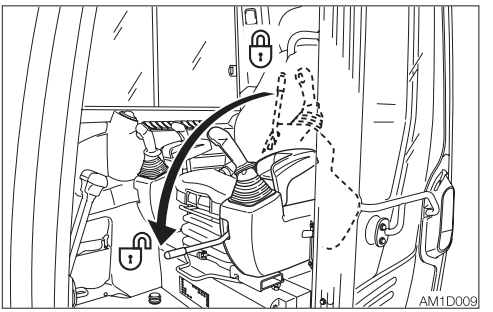

2. Fully lower the safety lock lever to disengage the lock and lift the bucket from the ground.

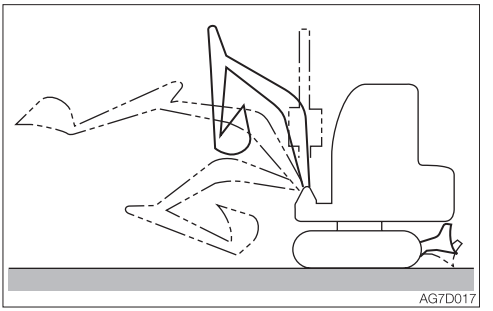

3. Extend and retract each of the cylinders slowly several times with no load.

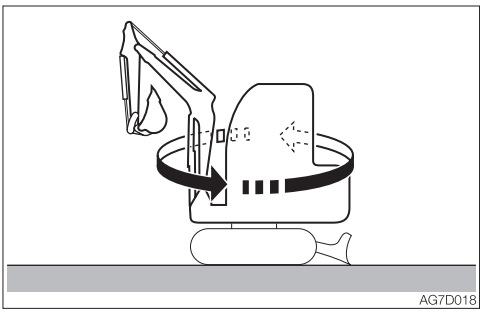

4. Slew slowly to the left and the right several times.

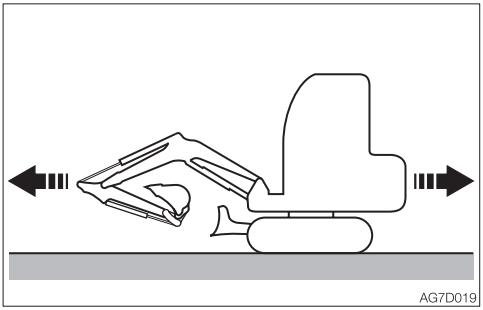

5. Travel slowly forward and in reverse several times.

Warm-up in cold climates

1. Perform the normal warm-up procedure.

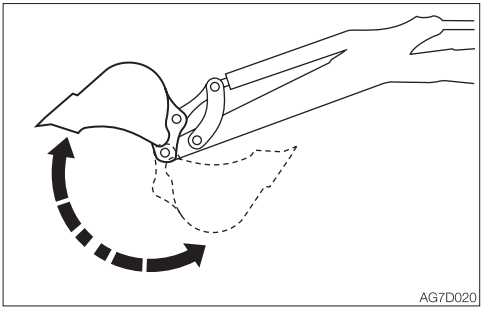

2. Set the bucket cylinder at the stroke end and keep it there.
   Do not keep this condition for more than 30 seconds.
3. Repeat Step 2 until the bucket operating speed becomes normal.

INSPECTION AFTER WARM-UP

After warming up the engine and machine (hydraulic oil), perform the checks and inspections described below, and repair if necessary.

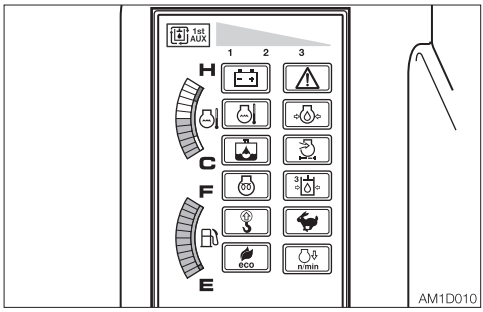

1. Check that the warning lamps and meters are as follows:
   · Are all warning lamps off?
   · Is the LED on water temperature gauge seen within the green range?
2. Check that there are no irregularities in the exhaust color, sound and vibrations.

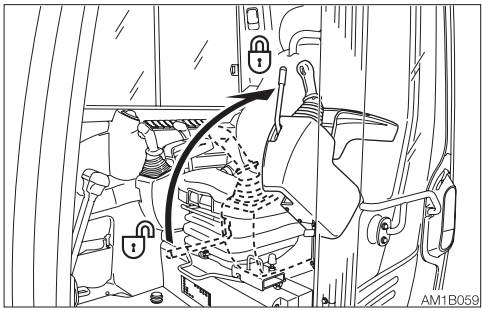

3. Raise the safety lock lever to the locked position, and then check that the operating and travel levers are locked.

OPERATING THE TRAVEL LEVERS/ PEDALS

⚠ WARNING

- Never allow anyone to enter the machine's slewing radius and path.
- Signal your intention to move by sounding the horn.
- There is a blind spot in the rear of the machine. Before traveling in reverse, as necessary, swing the cab around in reverse to check that the area is safe and clear.

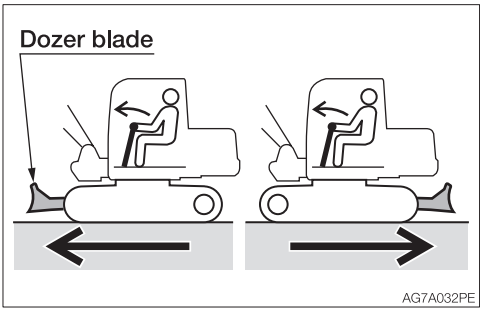

- Before operating the travel levers/ pedals, make sure that the dozer blade is to the front of the operator's seat. Remember that when the dozer blade is to the rear of the operator's seat, the travel levers/pedals must be operated in the reverse direction from when it is to the front.
- Clear all obstacles from the path of the machine.

Moving the machine forward and backward

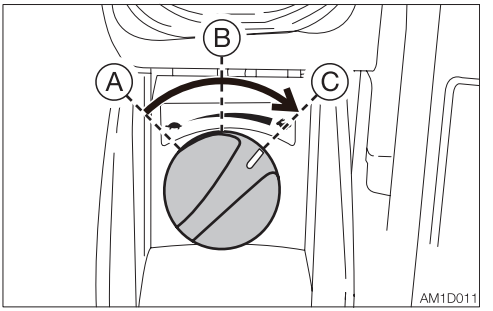

1. Turn the throttle controller and increase the engine speed.

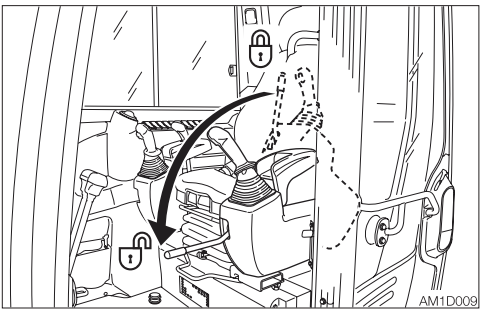

2. Fully lower the safety lock lever to disengage the lock.

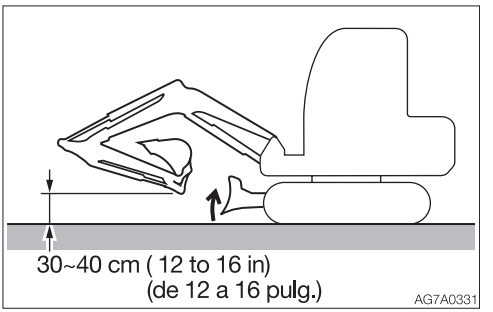

3. Fold the hoe attachment and lower it 30 to 40 cm (12 to 16 in.) above the ground.
4. Lift the dozer blade.
5. Operate the left and right travel levers as below.

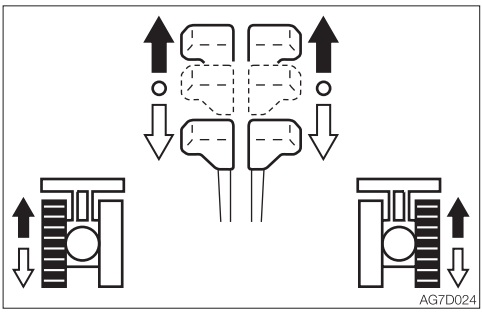

When the dozer blade is in front of the operator's seat:

➡ To move forward:
Tilt the levers forward.

⇨ To move backward:
Tilt the levers backward.

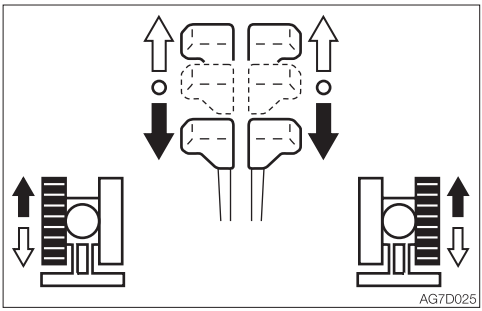

When the dozer blade is behind the operator's seat:

➡ To move forward:
Tilt the levers backward.

⇨ To move backward:
Tilt the levers forward.

Traveling in 2nd (High) speed

⚠ WARNING

When a load greater than a set value is applied during traveling in 2nd (high) speed, the speed will automatically slow down to 1st (low) speed. When the load becomes lighter, the speed will increase and return to 2nd (high) speed. It should be noted that the travel speed changes depending on the load condition (for machines with the automatic travel shift-down system).

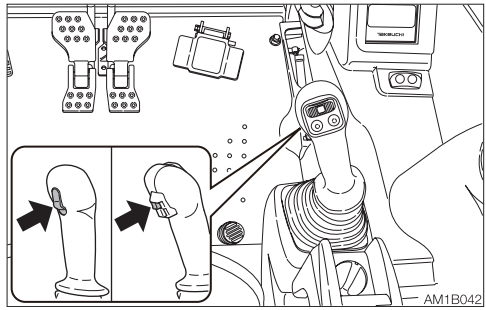

Press the travel speed switch to set to the 2nd (high) speed, and press it again to return to the 1st (low) speed.

Pivot turn

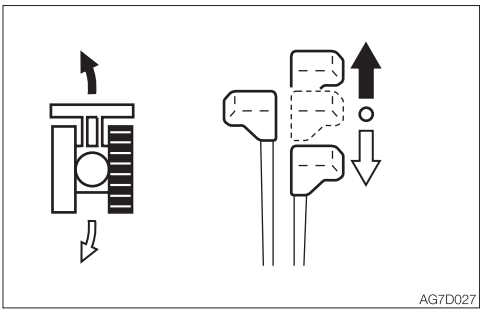

Turning to the left when stopped:

➡ To turn forward to the left:
Tilt the right lever forward.

⇨ To turn backward to the left:
Tilt the right lever backward.

To turn to the right, operate the left lever in the same way as for the right lever.

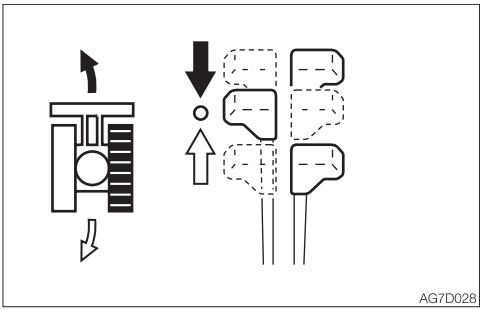

Turning to the left while traveling:

➡ To turn left while traveling forward:
Set the left lever to neutral.

⇨ To turn left while traveling backward:
Set the left lever to neutral.

To turn to the right while traveling, operate the right lever in the same way as for the left lever.

Spin turn

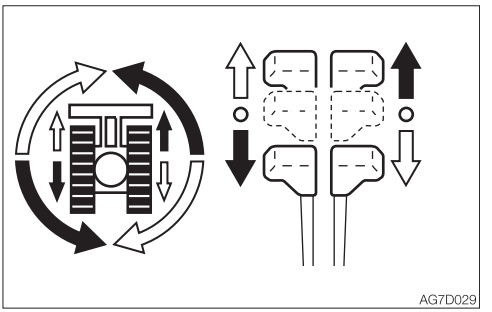

➡ To spin left:
Tilt the left lever backward and the right lever forward.

⇨ To spin right:
Tilt the right lever backward and the left lever forward.

STOPPING TRAVEL

⚠ WARNING

- Park the machine on a flat, rigid and safe ground. Set the parking brake. If you must park on a slope, chock the tracks to block the machine.
- If any control is accidentally touched when the safety lock lever is not locked, the machine may suddenly move and cause serious injury or death.

⚠ CAUTION

Never stop running the machine suddenly except in emergency. Stop in good time, if possible.

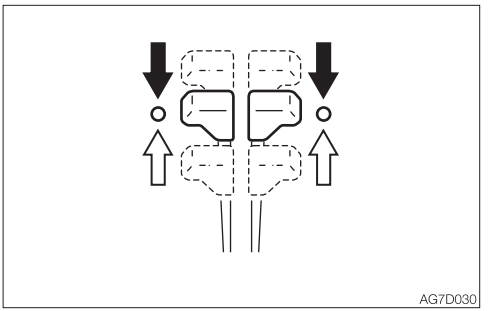

1. Set the left and right travel levers slowly to the neutral position. The machine stops.

OPERATING THE WORKING EQUIPMENT

⚠ WARNING

- **Before starting operation, carefully check which lever pattern you are going to use.**
- **It is described using the ISO pattern in this manual.**

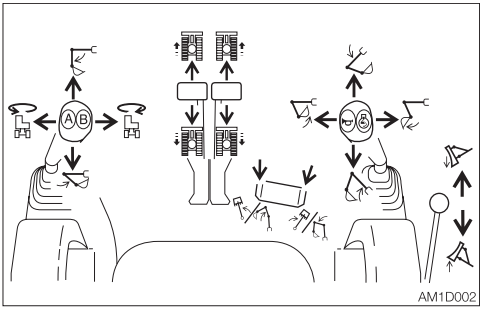

Use the right operating lever to operate the boom and bucket.
Use the left operating lever to operate the arm and slewing.
Return the operating levers to the neutral position to stop the hoe attachments.

1. Lower the safety lock lever to the unlocked position.
2. Set the pedal cover to the unlocked position.

Slewing

⚠ WARNING

Check the surrounding area for safety before slewing.

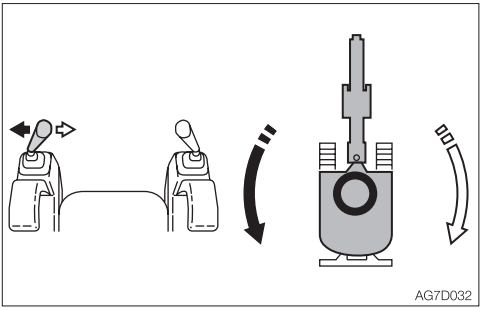

➡ Upperstructure slew left:
Tilt the left operating lever to the left.
⇨ Upperstructure slew right:
Tilt the left operating lever to the right.

Operating the boom

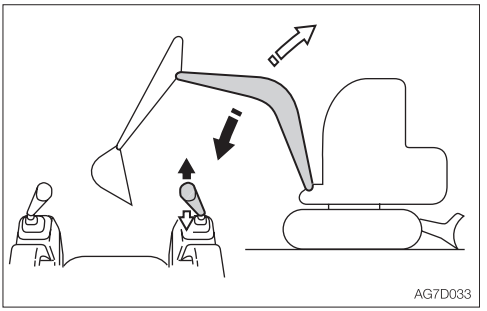

➡ Boom lower:
Tilt the right operating lever forward.
⇨ Boom raise:
Tilt the right operating lever backward.

Operating the arm

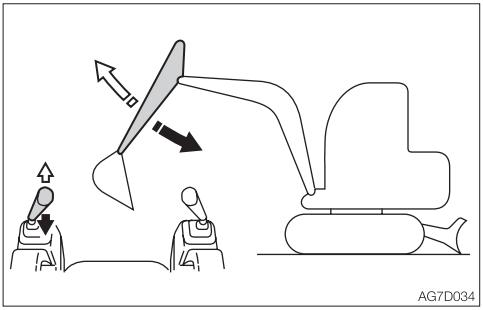

➡ Arm in:
Tilt the left operating lever backward.
⇨ Arm out:
Tilt the left operating lever forward.

Operating the bucket

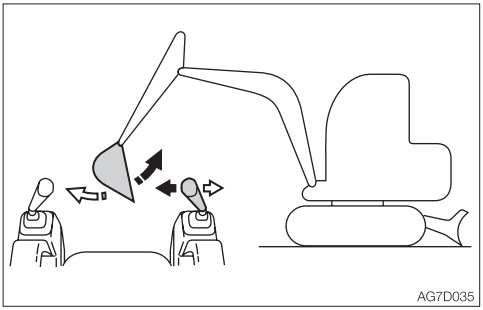

➡ Bucket load:
Tilt the right operating lever to the left.
⇨ Bucket dump:
Tilt the right operating lever to the right.

Operating the boom swing

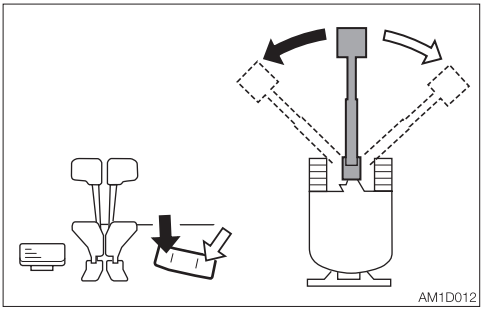

➡ Boom swing left:
Step on the left side of the pedal.
⇨ Boom swing right:
Step on the right side of the pedal.

Operating the second boom

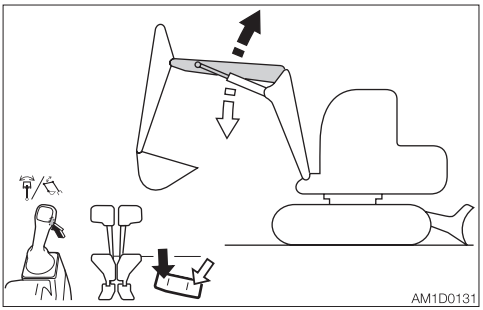

➡ Second boom raise:
Step on the left side of the pedal.
⇨ Second boom lower:
Step on the right side of the pedal.

Operating the dozer blade

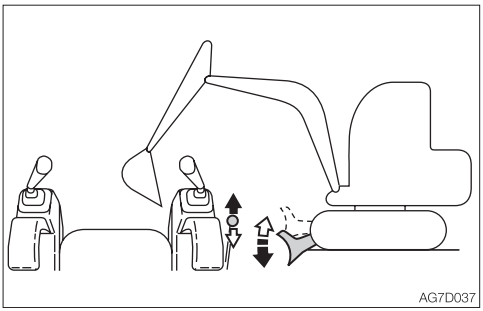

➡ Dozer blade lower:
Tilt the lever forward.
⇨ Dozer blade raise:
Tilt the lever backward.

OPERATING PROCEDURES

PROHIBITED OPERATIONS

⚠ WARNING

- **Do not operate on bedrock (hard or soft).**
- **Do not slew/swing while traveling. If you must operate the hoe attachment while traveling, operate at speeds slow enough so you have complete control at all times.**

Do not perform demolition or leveling using slew force

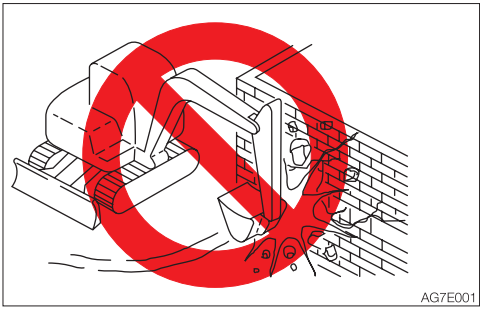

Do not demolish walls or level ground using slew force. Also, do not dig the bucket teeth into the ground during slewing. Doing so will damage the hoe attachment.

Do not dig while traveling

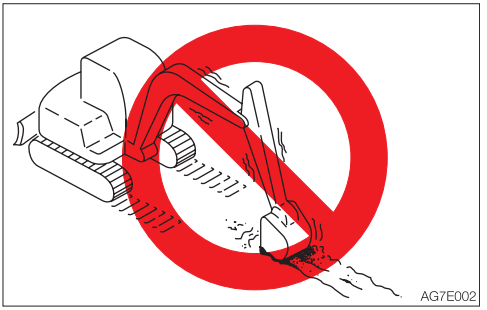

Do not dig the bucket into the ground and use the traveling force to dig.

Be gentle when using the hydraulic cylinder

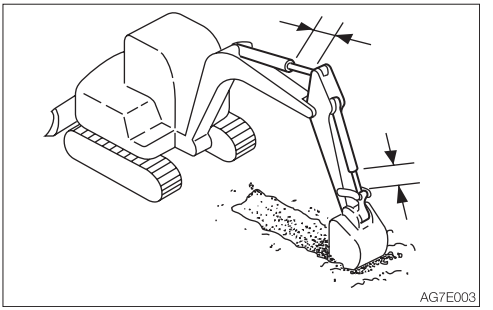

Do not extend the hydraulic cylinders to the stroke ends. Operate them with leeway.

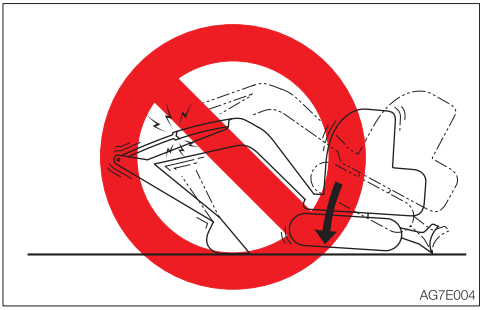

Do not support the machine body with the hoe attachment when the body is lowering with the arm cylinder fully extended. Doing so concentrates the load on the arm cylinder and could damage the arm cylinder.

Do not drive piles with the bucket or dig by banging the bucket

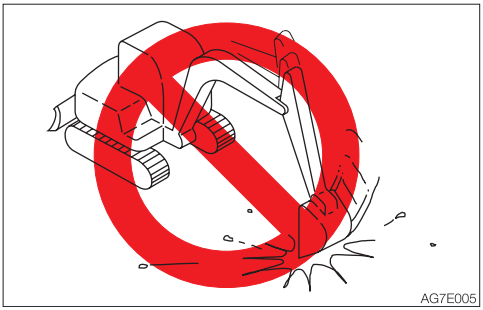

Doing so will shorten the service life of the hoe attachment. Use the hydraulic force to dig.

Do not perform operations using the machine's dropping force

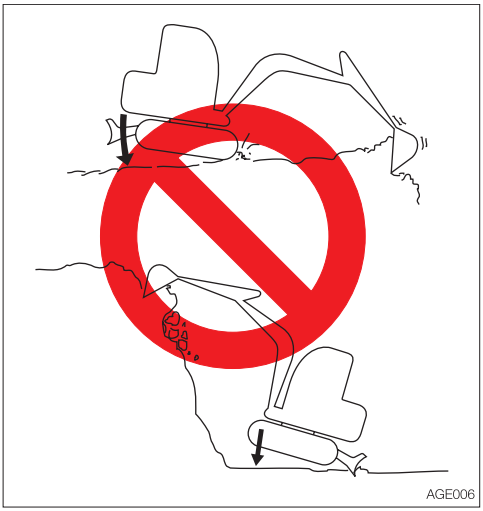

Putting excessive strain on the machine will shorten its service life. When digging, use the hydraulic force of the cylinders and the shallow and long strokes.

Digging bedrock

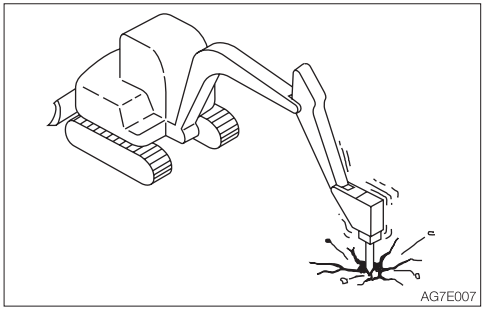

For hard base rock, break the rock up into small pieces with a breaker, etc., before digging. This prevents damage to the machine and is thus more economical in the end.

Caution on exposing the dozer blade to shocks

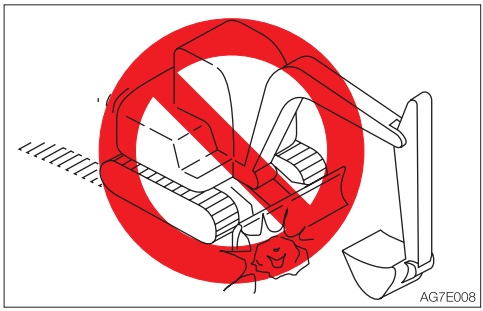

Hitting the dozer blade against rocks, etc., could damage the dozer blade or the blade cylinder.

Caution on folding the hoe attachment

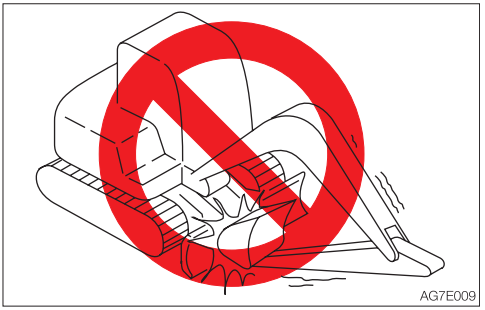

Be careful not to let the bucket to hit the dozer blade when the hoe attachment is being folded.

Do not use the dozer blade as an outrigger

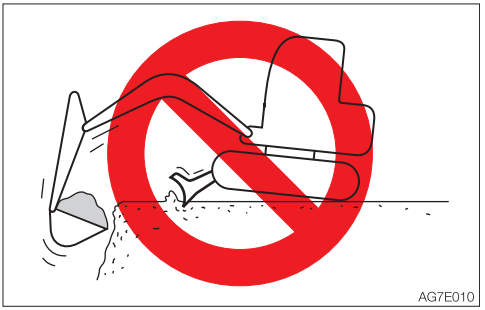

Pay attention to the dozer blade when digging

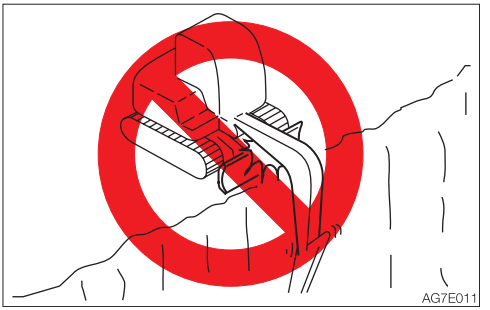

When digging deeply with the dozer blade positioned at the front, be careful that the boom cylinder and bucket do not hit the dozer blade.
Operate with the dozer blade at the rear whenever possible.

Caution on digging down with the dozer blade

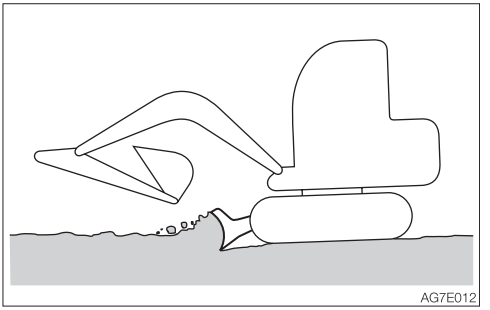

This dozer blade is designed for simple earth pushing. Do not dig down deeply with the dozer blade. Doing so could damage the dozer blade and undercarriage.

CAUTIONS ON OPERATING

Cautions on traveling

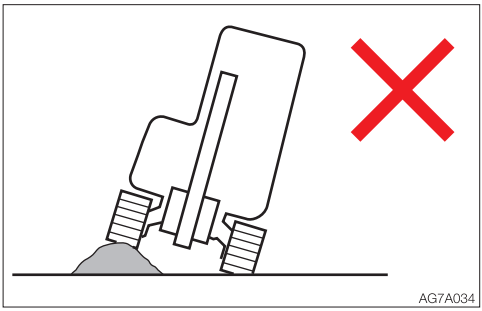

Traveling over obstacles (rocks, stumps, etc.) may put a great load on the machine body and may cause damage to it. Avoid crossing over obstacles whenever possible. If you must do so, keep the hoe attachment near the ground, travel at a low speed, and go over the obstacle at the center of the crawler.

Cautions on traveling in 2nd (High) speed

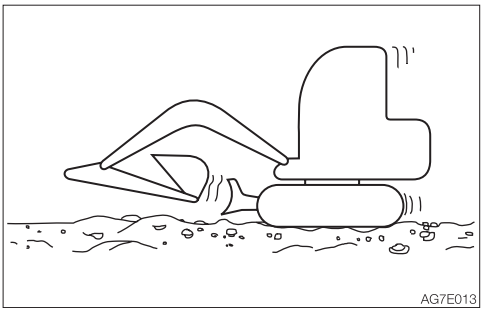

- On uneven ground, maintain the low speed and avoid starting, stopping or changing directions abruptly.
- When a load greater than a set value is applied during traveling in 2nd (high) speed, the speed will automatically slow down to 1st (low) speed. When the load becomes lighter, the speed will increase and return to 2nd (high) speed. It should be noted that the travel speed changes depending on the load condition (for machines with the automatic travel shift-down system).
- When traveling in 2nd speed, do so with the dozer blade at the front.

Cautions on using machine in water

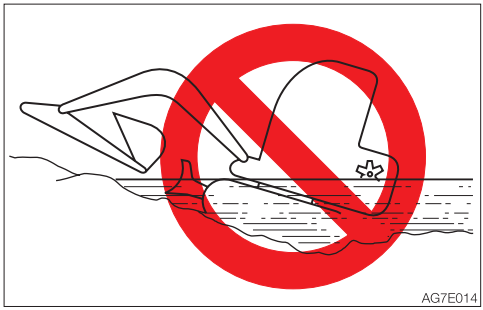

If the rear of the machine is submerged in water as shown in the figure above, it causes the radiator fan to turn in water, resulting in damage to the fan. The rear of the machine must not be submerged.

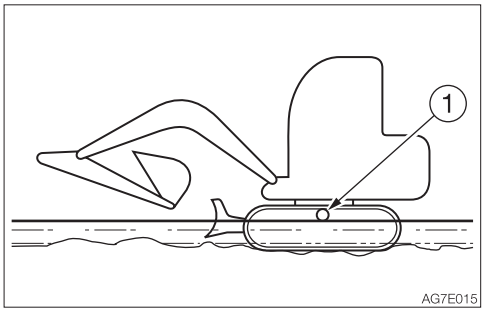

- Allowable water depth
  Use the machine in water only when the water is up to the bottom of the carrier roller (1).
- For those parts used in water for a long time, apply enough grease until the old grease is expelled.
- Never submerge the slew bearing or main body in water or sand. If submerged, contact a Takeuchi service agent for inspection.

CAUTIONS ON TRAVELING ON SLOPES

⚠ WARNING

- Never travel on slopes that are too steep for the machine to maintain its stability. (maximum gradeability: 35°, lateral tipping angle: 15°) Note that in reality, the machine's stability becomes lower than the above values depending on the working condition.
- When traveling on slopes, lower the bucket to a height of 20 to 30 cm (8 to 12 in.) above the ground. When climbing a steep slope, extend the hoe attachment to the front. In emergencies, lower the bucket to the ground and stop the machine.
- When traveling on slopes or grades, drive slowly in 1st (low) speed.
- When climbing a hill, keep the operator's seat facing the hillside. When descending a hill, keep the operator's seat facing the downhill direction. In either case, travel must be done while paying attention to the ground in front of the machine.
- Do not descend slopes in reverse.

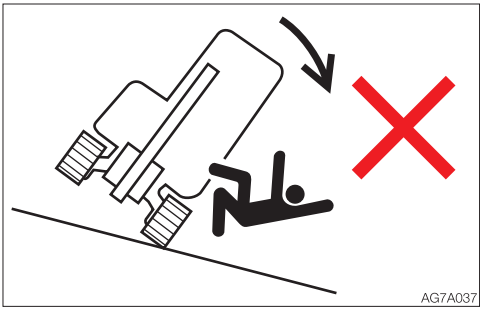

- Do not change directions on slopes or traverse slopes. First return to a flat surface, and then take an alternative path.
- The machine may slip sideways even on a slight slope if they are covered with grass or dead leaves, or when traveling on a wet metal plate or frozen surfaces. Do not allow the machine to position sideways to slopes.

Traveling posture on slopes
Climbing slopes

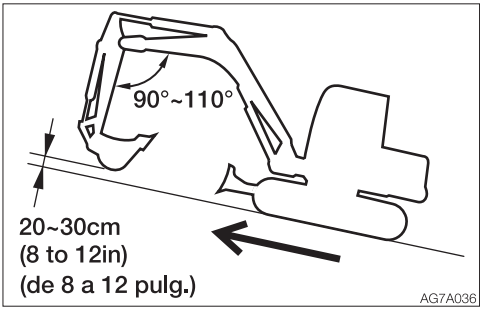

When climbing slopes of 15° or more, maintain the machine posture as shown in the figure above.

Descending slopes

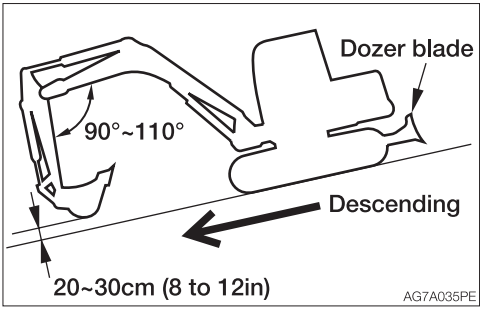

When descending slopes of 15° or more, slow down the engine speed and maintain the machine posture as shown in the figure above.

Braking when descending slopes

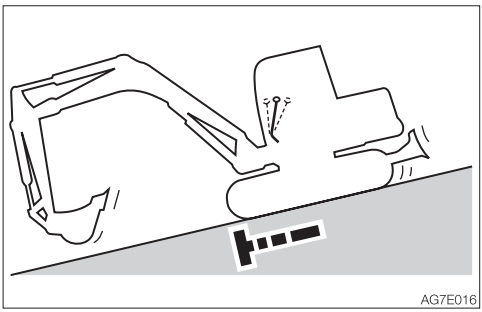

When descending slopes, the brakes are applied automatically once the travel levers are returned to the neutral position.

If the crawler slips

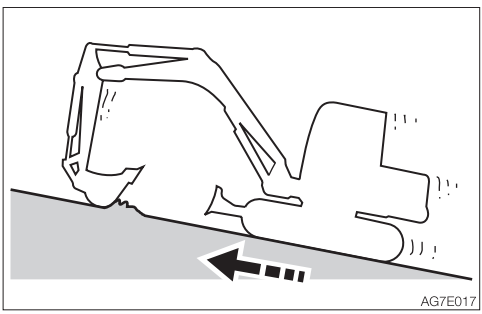

If the crawler slips while climbing a slope and impossible to travel, use the pulling force of the arm to climb the slope.

If the engine stops

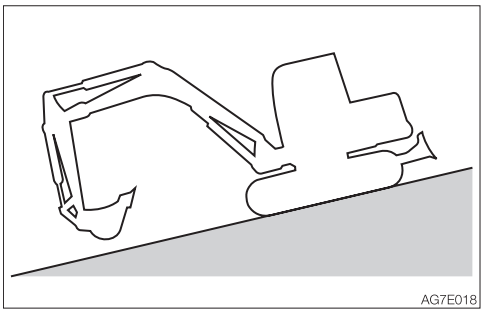

If the engine stops when descending a slope, set the travel levers to the neutral position, stop the machine, then start the engine.

Do not open the door while traveling on slopes



Opening the door while traveling on slopes is dangerous, as the force required to open and close the door changes abruptly. Always keep the door closed when traveling on slopes.

GETTING OUT OF MUD

If the machine gets stuck in mud, use the procedure below to get it out.

If one crawler is stuck

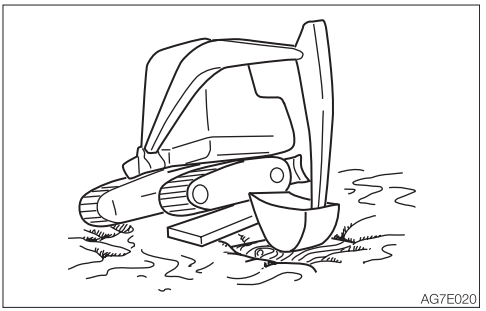

1. Swing the bucket to the side of the crawler being stuck.
2. Set the arm and boom to an angle of 90 to 110°.
3. Press the bottom of the bucket (not the teeth) against the ground.
4. Place a plank or the like under the lifted crawler.
5. Lift the bucket and slowly move the machine out of the mud.

If both crawlers are stuck

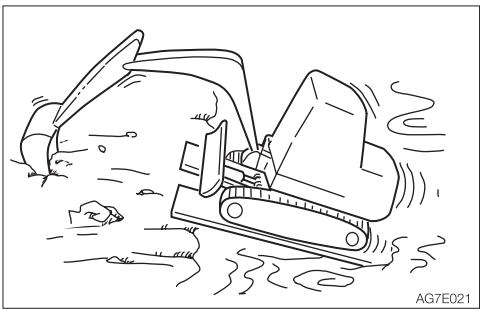

1. Perform the steps 1 to 4 above for both crawlers.
2. Dig the bucket into the ground in front of the machine.
3. Pull with the arm while traveling forward to slowly move the machine out.

OPERATIONS POSSIBLE WITH THIS MACHINE

Excavating

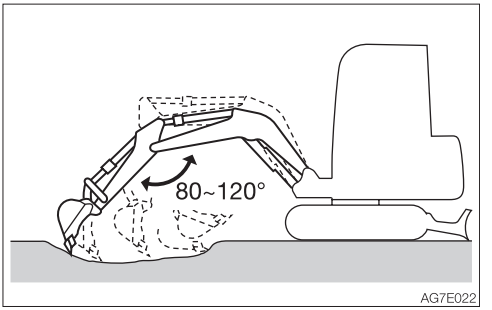

1. Set the dozer blade on the side opposite to the side you want to dig on.
2. Use the arm and bucket and dig with shallow, long strokes. The maximum digging force can be obtained when the boom and arm angle is 80 to 120°. Use this angle for effective digging.

Digging ditches

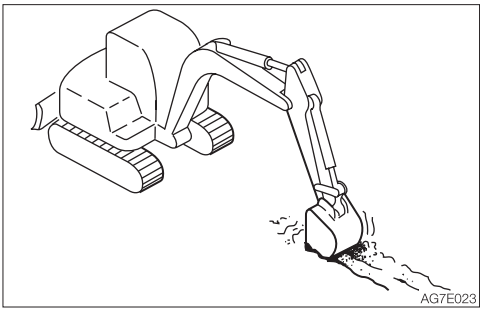

Install a bucket suited for digging ditches and set the crawlers parallel to the ditch to be dug for greater efficiency.
When digging wide ditches, dig the sides first, and then dig the center.

Digging side drains

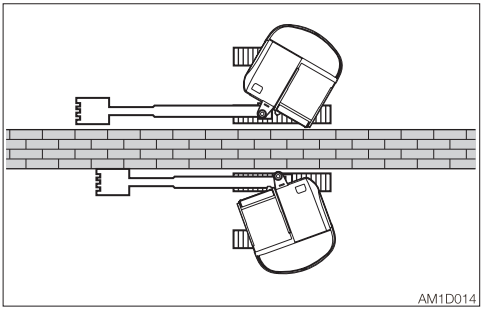

Use the boom swing function to dig side ditches as shown in the figure.

Loading

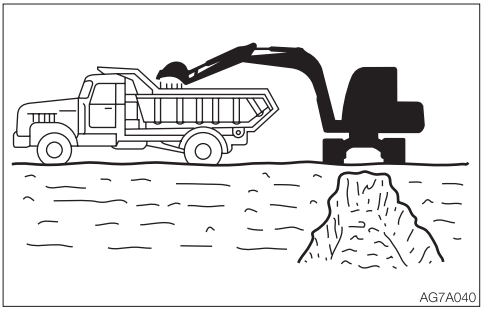

When loading dirt onto a truck bed, load from the back of the truck, as it is easier and able to load more load than doing it from the front.
Also, use a small slewing angle for greater efficiency.

Leveling

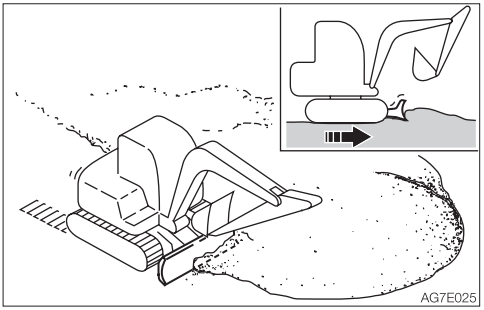

1. Bring the hoe attachment close to the body.
2. Gradually remove the dirt from the side of the mound.
3. Once the mound is low, remove the dirt from the top. If the load becomes too heavy for the machine body, adjust by raising or lowering the dozer blade.

PARKING THE MACHINE

PARKING

⚠ WARNING

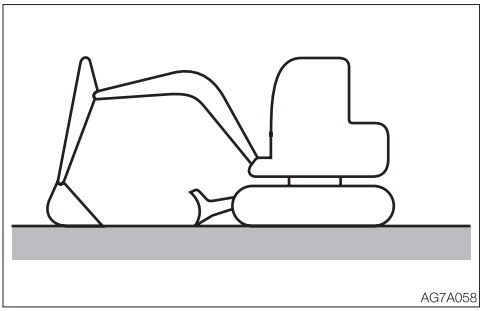

- **Park the machine on a flat, rigid and safe ground. Set the parking brake.**

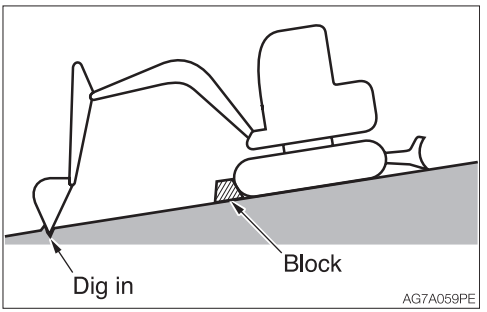

If you must park on a slope or incline, park the machine securely and block the movement of the machine.

- **When parking on a street, use barriers, caution signs, lights, etc., so that the machine can easily be seen even at night to avoid collision with other vehicles.**
- **Before leaving the operator's seat, raise the safety lock lever to engage the lock and stop the engine. Also, be sure to remove the key, lock the door and covers, take it with you and store it in a specified place.**

1. Set the left and right travel levers to the neutral position.
2. Return the throttle controller to set the engine to low idling.
3. Lower the bucket and the dozer blade to the ground.
4. Raise the safety lock lever to the locked position.
5. Stop the engine and remove the key.
   Refer to "Stopping the engine" on page 3-5.
   For machines equipped with accumulator: Refer to "Operating the machine with an accumulator" on page 2-53.

INSPECTION AND CHECKS AFTER STOPPING THE ENGINE

1. Check for oil or water leak and inspect the working equipment, covers and undercarriage. If any irregularities are found, repair.
2. Fill up the fuel tank.
   Refer to "Inspecting the fuel level" on page 5-21.
3. Remove any paper scraps or dirt from the engine room.
4. Remove any mud from the undercarriage.

Locking

Be sure to lock the following places:

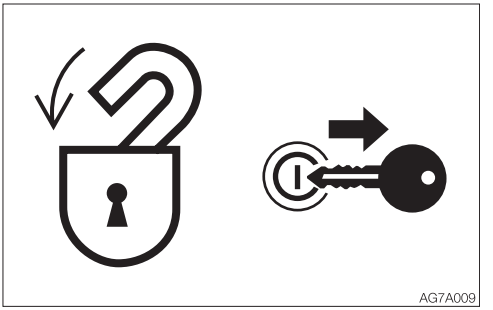

- Cab door
- Engine hood
- Covers

HANDLING IN COLD CLIMATES

PREPARING FOR COLD CLIMATES

Starting engine in cold climates is not easy, and it becomes more difficult if the coolant freezes. Prepare for cold-climate problems as follows.

Replacing the fuel and lubricant
Replace the hydraulic oil, engine oil and fuel with those intended for cold climates.
Refer to “Fuel and lubricant table” on page 5-4.

Engine coolant

⚠ WARNING

The engine coolant is combustible. Keep away from flame.
Use long-life coolant (antifreeze) and tap water for the engine coolant.

Note: New machines are delivered with JIS Type 2 long-life coolant (antifreeze) at a concentration of 50%.
Refer to “Fuel and lubricant table” on page 5-4.

Battery
As the temperature drops, the battery performance decreases.
Inspect the battery. If it is discharging, contact a Takeuchi service agent to have the battery recharged.
Refer to “Inspecting the battery fluid level and replenishing” on page 5-32.

CAUTIONS AFTER OPERATIONS

Observe the following cautions to prevent mud, water, or the undercarriage from freezing and making it impossible for the machine to move.

- Remove all mud and water from the machine body. In particular, wipe the hydraulic cylinder rod clean to prevent damage to the seal caused by mud or dirt on the rod surface getting inside the seal together with drops of water.
- Park the machine on hard and dry ground. If this is impossible, park the machine on a wooden board placed on ground.
- Drain any water in the fuel tank to prevent it from freezing.
  Refer to “Draining the water from the fuel tank” on page 5-31.
- As the battery capacity drops markedly in low temperatures, cover the battery or remove it from the machine and keep it in a warm place.
  If the electrolyte level is low, add distilled water in the morning before beginning work. To prevent the battery electrolyte from freezing in the night, do not add water after the day’s work.

AFTER THE COLD CLIMATE

When the climate becomes warmer, do as follows:

- Replace the fuel and oil for all parts with those specified in the “Fuel and lubricant table”.
  Refer to “Fuel and lubricant table” on page 5-4.
- If a coolant of “one season type” is used, drain the cooling system completely, clean out the inside of the cooling system thoroughly, and fill with tap water.
  Refer to “Cleaning the engine cooling system <TB290>” on page 5-51.

HANDLING RUBBER CRAWLERS

Rubber crawlers have an inherent weakness, lack of strength, due to their use of rubber. Be sure to observe the prohibitions and cautions below to prevent the crawlers from being damaged or coming off.

PROHIBITIONS

Do not travel or operate the machine in the following places:

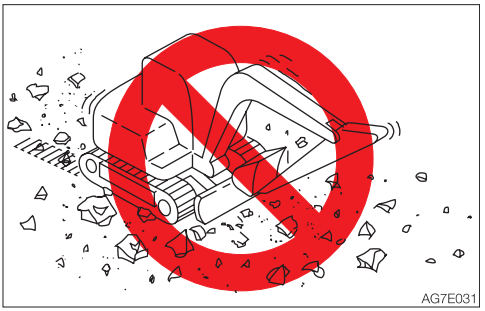

- Traveling and slewing on crushed rock, extremely rough hard rock, steel beams, scrap iron, or near the edges of steel plates will cause damage to the rubber crawlers.

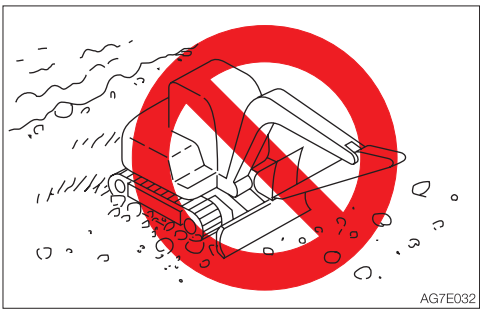

- Traveling on riverbeds or places where there are large numbers of boulders may cause the stones to get caught and damage the crawler or make the crawler come off.
- Do not use the machine on the seashore. The salt may corrode the steel core.

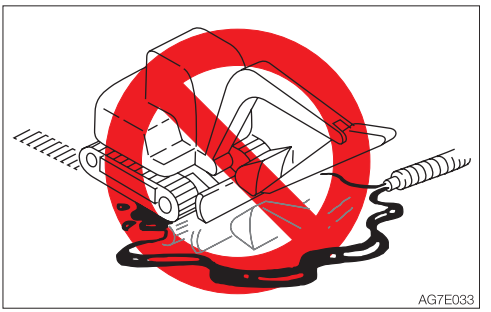

- Do not let fuel, oil, salt or chemical solvents get on the crawlers. These substances may corrode the bonding of the steel cores on the crawlers, resulting in rust or peeling. If any of these substances gets on the crawler, immediately clean it off with water.



- It will cause an irregular wear or damage to the lugs, if the machine travels on irregular surfaces such as recently paved with asphalt, exposed to a bonfire or of hot iron sheets under the blazing sun.
- Do not move earth in places where the rubber crawlers may slip. Doing so may speed up lug wear.

CAUTIONS

Observe the following cautions when operating the machine:

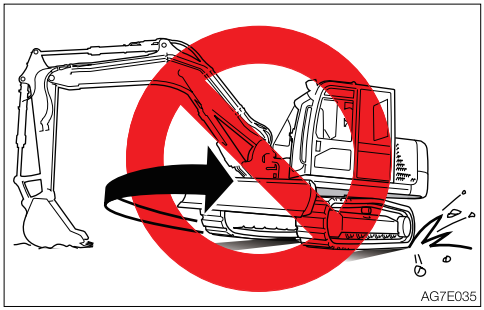
AG7E035

- Do not turn the undercarriage with the front of the machine body lifted using the hoe attachment (the upperstructure is not turned). Doing so will twist the crawlers with the load concentrated on a single point on the crawler belt, causing rapid damage to the crawlers.
- Avoid changing course abruptly or spin-turning on concrete surfaces whenever possible. Doing so may wear or damage the rubber crawlers.
- Avoid drops that may expose the rubber crawlers to strong shocks.
- Salt, potassium chloride, ammonium sulfate, potassium sulfate, and triple superphosphate of lime can damage the crawler belts. If any of these substances gets on the crawler belts, wash if off thoroughly with water.
- Do not let the sides of the rubber crawlers rub against concrete or walls.
- Do not damage the rubber crawlers by hitting the bucket against them.
- Be especially careful on snowy or frozen surfaces in winter, as the crawler belts tend to slip in such conditions.
- Use rubber crawler belts at temperatures between –25°C to +55°C (–14°F to 131°F).
- When storing the rubber crawlers for long periods of time (three months or more), do so indoors in a place not exposed to direct sunlight or rain.

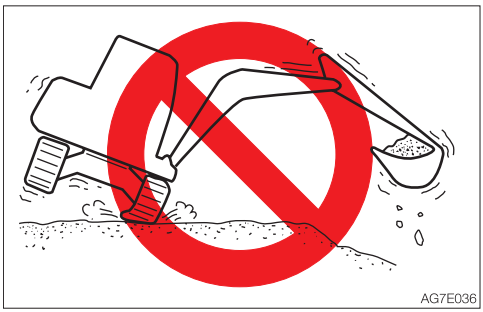
AG7E036

- Rubber crawler belts are not as stable as steel crawler belts since the entire lugs are made of rubber. Be very careful when slewing and swinging sideways.

PREVENTING THE RUBBER CRAWLERS FROM COMING OFF

Observe the following cautions to prevent the crawler from coming off:

- Always keep the crawlers at the proper tension.

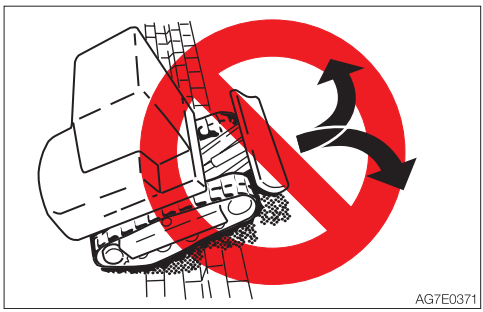
AG7E0371

- When traveling over a large step such as a cobblestone or rock (20 cm (8 in.) or deeper), climb up the step at the right angle and do not change courses on top of the step.

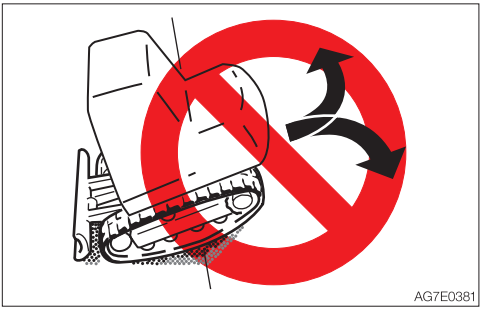

• When climbing in reverse, do not change directions at the point where the slope starts.



• Avoid traveling by setting one crawler on a slope or projecting portion and the other crawler on a flat surface (with the machine at a tilt of 10° or more). Travel with both crawlers set on flat surfaces.

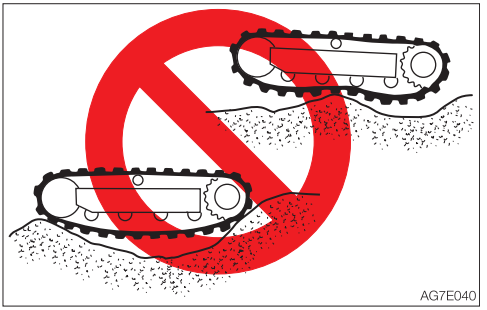

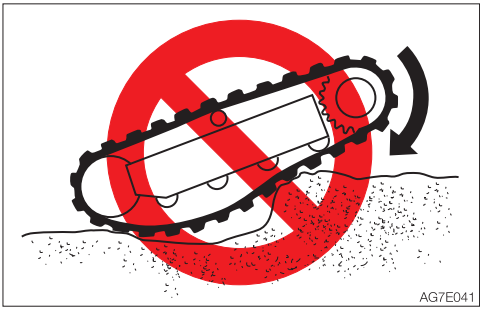

• Do not change directions when the crawler belts are slack as shown in the figure.

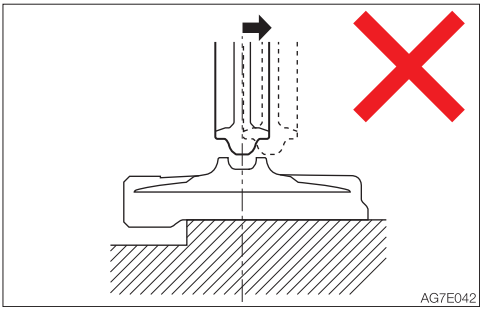

• The rubber crawler belts will come off if the machine travels backward in this condition.

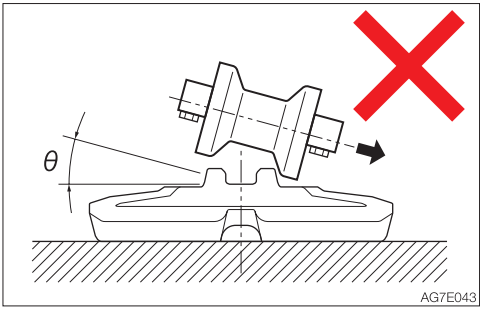

• The rubber crawler belts will come off if the machine turns in this condition.

TRANSPORT



LOADING AND UNLOADING

⚠ WARNING

The machine may roll or tip over or fall while being loaded or unloaded. Take the following precautions:

- **Select a firm, level surface and keep sufficient distance from road shoulders.**
- **Secure the ramps of adequate strength and size to the truck bed. The slope of the ramps must not exceed 15°. If the rumps are bowed down too low, support them with poles or blocks.**
- **Never use the working equipment to load or unload the machine. Doing so may result in tipping over or falling down of the machine.**
- **Keep the truck bed and loading ramps clean of oil, soil, ice, snow, and other materials to prevent the machine from sliding sideways. Clean the crawlers.**
- **Chock the transporter wheels to prevent movement.**
- **Turn off the deceleration switch and auto-deceleration switch. Otherwise, the engine speed may suddenly increase to cause troubles.**
- **When being loaded or unloaded, travel slowly in 1st (low) gear by following the signal from the signal person.**
- **Never change courses on the ramps.**
- **Do not slew/swing on the ramps. The machine may tip over.**
- **When slewing/swinging on the truck bed, do it slowly as the footing should be unstable.**
- **Lock the cab door after being loaded, if applicable. Otherwise, the door may open during transport.**
- **Chock the tracks and secure the machine to the truck bed with wire rope or chain.**

When loading or unloading the machine, be sure to use ramps or a platform and follow the procedure below.

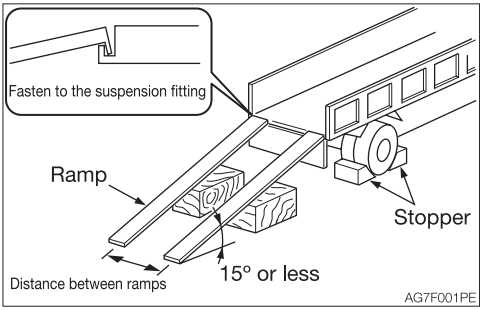

1. Set the parking brake on the transporter and chock the wheels.
2. Fix the ramps securely to the truck bed. The slope of the ramps must not exceed 15°.
3. Align the center of the truck bed with the center of the machine, and of the ramp with the center of the crawler.
4. Make sure the dozer blade does not hit the ramps.
5. Lower the hoe attachment as far as possible without letting it touch the transporter.
6. Decrease the engine speed.

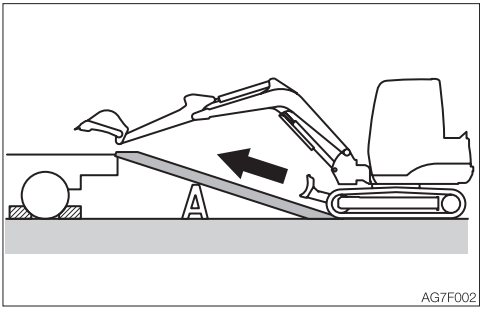

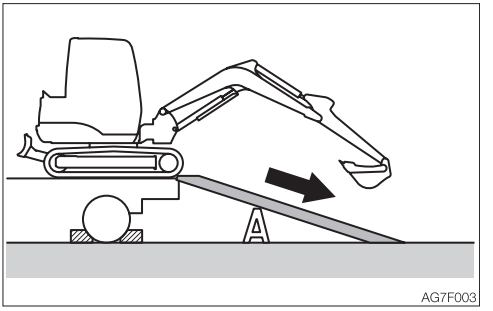

7. Drive the machine straight toward the ramps and travel up or down the ramps at 1st (low) speed, by following the signal from the signal person.
8. Load the machine at the specified position on the transporter.
   Refer to “Transporting posture” on page 4-6.

HOISTING THE MACHINE

⚠ WARNING

- **Know and use the correct crane signals.**
- **Check the hoisting equipment for damaged or missing parts on a daily basis and replace as necessary.**
- **When hoisting, use a wire rope capable of lifting the machine mass.**
- **Hoist the machine in only as manner described in the procedure below. Do not do it in any other manner. Doing so is dangerous as it may result in the machine losing its balance.**
- **Do not hoist the machine with an operator on it.**
- **When hoisting, hoist slowly so that the machine does not tip.**
- **Keep everyone out of the area when hoisting. Do not move the machine over the heads of the persons.**

IMPORTANT: This hoisting method applies to machines with standard specifications. The center of gravity differs according to the attachments and optional equipment installed.
Contact your Takeuchi service agent for details.

Hoisting

1. Slew the upperstructure so that the dozer blade is at the rear of the machine (set the upperstructure parallel to the track frame).
2. Raise the dozer blade fully.
3. Extend the bucket cylinder and arm cylinder fully to raise the boom to its uppermost position.
4. If the boom is swung to either the left or right side, set it in the neutral position.
5. Raise the safety lock lever to the locked position.
6. Stop the engine, remove the starter key and get off the machine.
7. Install the wire ropes as shown on the figure below. Install the wire ropes and hoisting attachment without letting them touch the machine body.
8. Hoist the machine slowly until it leaves the ground.
9. Stop hoisting until the machine becomes stable, and then start hoisting the machine slowly again.

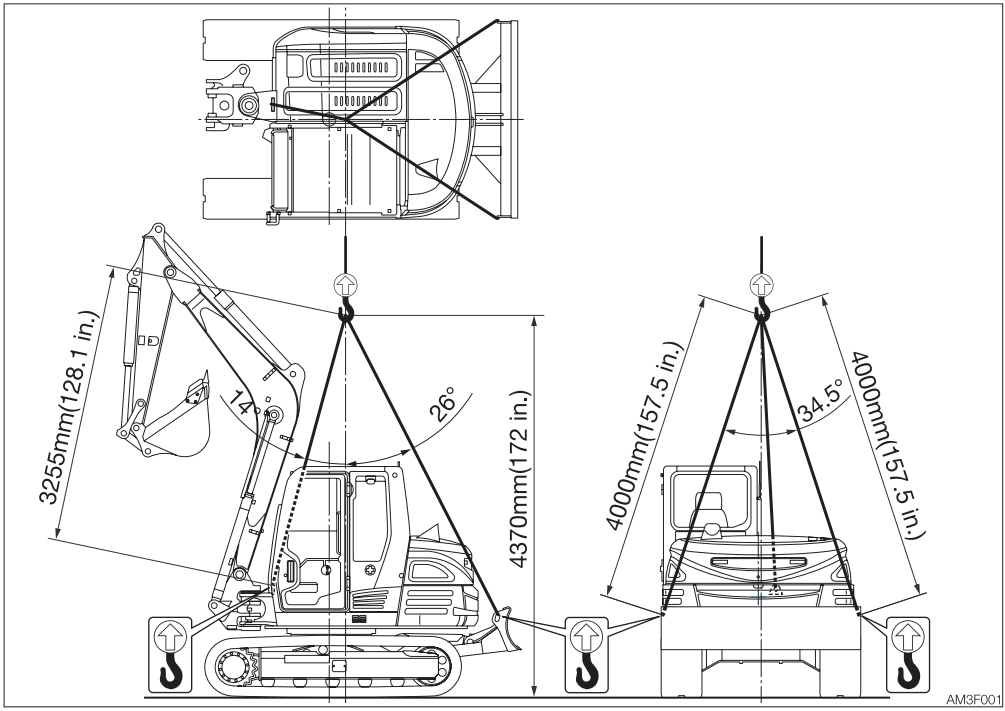
3255mm(128.1 in.)
14°
26°
4370mm(172 in.)
4000mm(157.5 in.)
34.5°
4000mm(157.5 in.)
AM3F001

SECURING THE MACHINE

After loading the machine at the specified position, secure it as described below.

Transporting posture

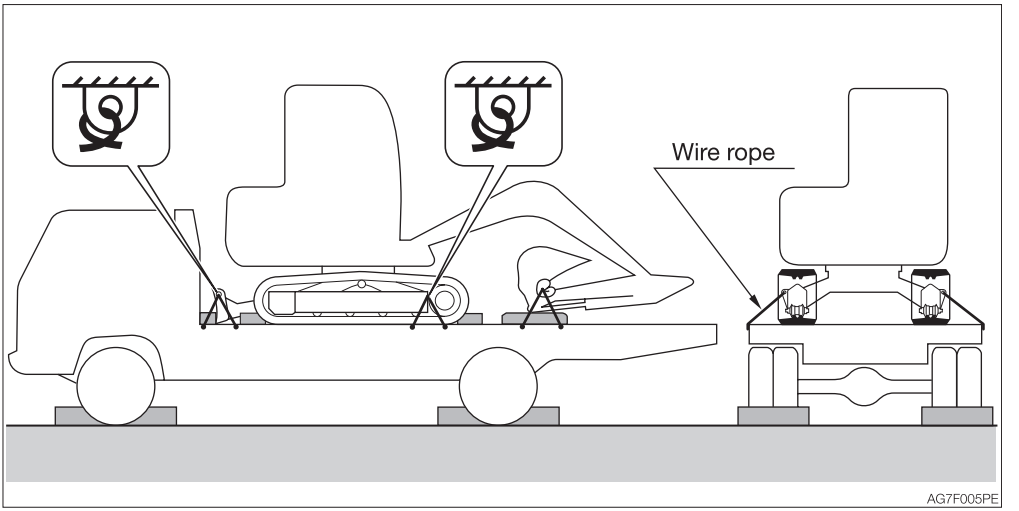

1. Lower the dozer blade.
2. Extend the bucket cylinder and arm cylinder fully, and then lower the boom.
3. Raise the safety lock lever to the locked position.
4. Stop the engine, remove the starter key and lock all locks.
5. Place the stoppers (chocks) in front and behind the crawlers.
6. Install a chain or wire rope over the lower frame of the machine and fasten it securely to prevent the machine from slipping sideways.
7. Secure the bucket with a chain or wire rope.

IMPORTANT: Place a wooden block under the bucket to protect the floor from damage caused by the bucket.

Precautions to be taken during transportation

⚠ WARNING

- **Know and follow the applicable safety rules, vehicle code and traffic laws when transporting the machine.**
- **Select the best transport route by considering the length, width, height and weight of the truck with the machine loaded on it.**
- **Never abruptly start or stop or run at a high speed at the sharp curves during transport. Doing so will move or lose the balance of the loaded machine.**

MAINTENANCE



GENERAL

MAINTENANCE OVERVIEW

To keep the machine in good condition and use if for a long period, perform the inspection and maintenance properly and safely following the procedures recommended by this manual.

The inspection and maintenance items are divided into groups according to the machine's total operating time: every 10 hours (walk-around and daily inspection), every 50 hours, every 250 hours, etc. Refer to the hour meter readings to determine when to schedule an inspection and maintenance. Items for which it is not possible to determine the inspection and maintenance interval are included under "When Required".

When operating the machine in extremely harsh environments (with high dust levels or high temperatures), inspection and maintenance should be performed earlier than the times specified on the Maintenance List.

CAUTIONS ON MAINTENANCE

Do not perform any other inspection and maintenance works than those listed in this manual.
For works not listed in this manual, ask your sales or a service dealer for help.

Keep the machine clean
- Clean the machine before performing inspection and maintenance and try to keep it clean.
- Stop the engine before washing the machine. Cover the electrical parts so that water cannot enter. Water on electrical parts could cause short-circuits or malfunctions. Do not use water or steam to wash the battery, electronic control components, sensors, connectors or the operator's compartment.

Fuel, lubricant and grease
- Choose fuel, lubricant and grease by following to the "Fuel and lubricant table".
- Use fuels, lubricants and greases which do not contain water, and be careful to keep dirt out when changing or replenishing fuel, lubricant or grease.
- Store fuels, lubricants and greases in the prescribed places and in such a way that no water or dirt can get in them.

Cautions on refueling
- If the port includes a strainer, do not remove the strainer when fueling.
- After fueling, be sure to securely tighten the fuel filler cap.
- Do not add more than the specified amount of fuel.

Do not use fuel to clean parts
Do not use fuel to clean parts. Use a non-combustible cleaning agent.

Keep dirt out
When mounting and removing parts, do so in a place where there is no dust, clean the working area and the part, and keep dirt out.

Clean the installation surfaces

When installing and removing parts, be sure that the surfaces of contact of the parts are clean. If the sealing grooves of the surface of contact are damaged, consult your sales or service dealer for repair or release.

Seals and split pins

- Be sure to replace all seals and cotter pins with new ones.
- When installing, be careful not to damage or twist the seal.

Sealing tape

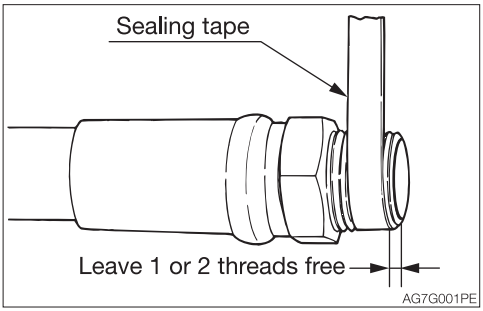

- When wrapping the plug with sealing tape, remove any old sealing tape from the threads and clean the threads.
- Wrap the thread tight with seal tape starting 1 or 2 threads away from the thread end.

Disposing of wastes

- Always collect oil that is drained from the machine in containers. Improperly disposed waste oil can cause environmental harm.
- Follow appropriate laws and regulations when disposing of harmful objects such as oil, fuel, cooling water, coolant, filters and batteries.

Check after maintenance

- Gradually increase the engine speed from a low idle to maximum speed and check that there is no oil or water leaking from serviced parts.
- Operate each control lever and check that the machine is operating properly.

Cautions on handling of battery wiring

- Disconnect the wiring from the both terminals (+ and –) on the battery before working on the electrical system or doing electric welding.
  Always disconnect it from the earth side (–). When connecting, connect the earth side last.
- Do not disconnect the battery wiring while the engine is moving. Otherwise, the electric circuits of the rotary converter or others may be damaged.

SERVICE DATA

FUEL AND LUBRICANT TABLE

Select the appropriate fuel, lubricant and grease according to the temperature by referring to the table below.

- Regardless of the specified time, change the oil if it becomes too dirty or degraded.
- When refilling, never mix oils of different brands. If a brand is to be changed, replace the whole fuel/oil.

Fuel

Diesel fuel specifications

Diesel fuel should comply with the following specifications. The table lists several worldwide specifications for diesel fuels.

Diesel fuel specification	Area	Diesel fuel specification	Area
ASTM D975 No.1-D S15 S500 No.2-D S15 S500	USA Canada	ISO 8217DMX	International
EN590: 2009	European union	BS2869-A1 or A2	United kingdom

Fuel tank	**Diesel fuel**	To maintain the performance and service life of the engine, always use clean and high-quality fuel. • To avoid freezing in cold climates, use a diesel fuel that still functions when the temperature is at least 12°C (21.6°F) below the lowest expected ambient temperature. • Use a diesel fuel that has a cetane number of 45 or higher. When operating at a very low temperature or at a high altitude, a higher cetane number fuel will be required. • Use fuel with sulfur content of less than 15 ppm by volume. <TB285> Especially in the U.S.A. and Canada, ultra-low sulfur fuel should be used. A higher sulfur content fuel may cause sulfuric acid corrosion in the cylinders of the engines. • Never mix kerosene, used engine oil, or residual fuels with the diesel fuel. • Poor quality fuel can reduce engine performance and / or cause engine damage. • Fuel additives are not recommended. Some fuel additives may cause poor engine performance.

Lubricant

Location	Type	Type by air temperature -4 14 32 50 68 86 104°F -20 -10 0 10 20 30 40°C	When to replace
Engine oil pan	Diesel engine oil <TB285> API: CF class or higher <TB290> API: CF-4 class or higher	SAE 10W-30 SAE 15W-40	Every 250 hrs.
Hydraulic oil tank	Takeuchi genuine hydraulic oil 46	ISO VG46	Every 4000 hrs.***
	Biodegradable oil recommended by Takeuchi**** Mobil EAL Envirosyn 46H Panolin HLP Synth 46	ISO VG46	Every 4000 hrs.
	Anti-wear hydraulic oil	ISO VG32 ISO VG46 ISO VG68	Every 2000 hrs.***
Engine cooling system	Cooling water (water + coolant)** SAE: J814C, J1941, J1034 or J2036 ASTM: D6210 or D4985 (USA) JIS: K-2234 (Japan)	Mixture of 50% coolant Mixture of 30% coolant	<TB285> Every 2000 hrs. or every two years (whichever comes first) <TB290> Every 1000 hrs.
Travel reduction gear	Gear oil API: GL-4	SAE 90	Every 1000 hrs. after the initial 250 hrs.*
Slew bearing	Lithium based grease EP-2 NLGI No.2	—	Every 50 hrs.
Working equipment			Daily or every 10 hrs.

* : If the ratio of traveling time to total operating time is high, replace the gear oil earlier than the specified time.

** : For water, use tap water (soft). Do not use well or river water. When the ambient temperature drops below 0°C (32°F), add coolant (antifreeze). Follow the coolant manufacturer's instructions to determine the mixture ratio.

*** : The hydraulic oil replacement interval depends on the type of hydraulic oil being used. New machine are delivered with Takeuchi genuine hydraulic oil 46, and the hydraulic oil replacement intervals indicated in this manual assume that Takeuchi genuine hydraulic oil 46 is being used. When using conventional antiwear hydraulic oil, the hydraulic oil should be replaced every 2000 hours.

**** : When replacing a mineral oil with a biodegradable oil, the residual mineral oil in the machine should be about 2% or less, as complying with the ISO 15380. For details, refer to "Biodegradable oil" on page 8-10.

API standard: American Petroleum Institute
ACEA standard: Association des Constructeurs Européens d'Automobiles
SAE standard: Society of Automotive Engineers