Volume
<TB285>

Engine oil pan	Engine cooling system	Hydraulic oil tank	Fuel tank	Travel reduction gear
Upper limit 10.2 L (10.8 US qt.) Lower limit 5.7 L (6 US qt.)	14 L (14.8 US qt.)	System 140 L (37 US gal.) Tank 73 L (19.3 US gal.)	Level capacity 128 L (33.8 US gal.) 120 L (31.7 US gal.)*	1.1L X 2 (1.16 US qt.) X 2

*: When the auto fuel supply pump is stopped (185000910 or later)

<TB290>

Engine oil pan	Engine cooling system	Hydraulic oil tank	Fuel tank	Travel reduction gear
Upper limit 15 L (15.9 US qt.) Lower limit 11 L (11.6 US qt.)	16 L (16.9 US qt.)	System 140 L (37 US gal.) Tank 73 L (19.3 US gal.)	Level capacity 128 L (33.8 US gal.) 120 L (31.7 US gal.)*	1.1L X 2 (1.16 US qt.) X 2

*: When the auto fuel supply pump is stopped (190001043 or later)

REGULARLY REPLACE THE HYDRAULIC OIL

When a hydraulic breaker is used, the oil deteriorates more quickly than that used for a usual excavation operation. Be sure to replace the hydraulic oil and the return filter elements.

- Failure to replace these in time can lead to damage to the machine and the breaker hydraulic system. To prolong the service life of the hydraulic devices, properly replace the hydraulic oil and the return filter elements according to the table below.
- When replacing the hydraulic oil, clean the suction strainer.

Replacement interval (hours)

Item	Hydraulic oil	Filter element
1st time	—	25
2nd time	—	100
Periodically	1200 (600)	200

When the breaker operating ratio is 100%.
Refer to “Hydraulic breaker” on page 8-6.

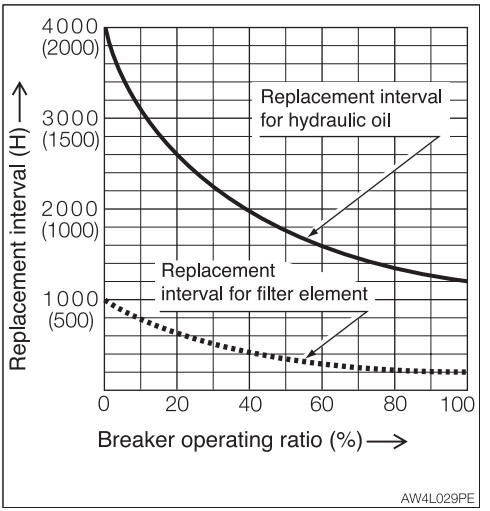

( ): When a conventional antiwear hydraulic oil is used.

LIST OF CONSUMABLES

Periodically replace consumables such as filters and elements according to the table below.

System	Item	Part name	Part No.	When to replace
Hydraulic system	Hydraulic oil return filter	Element	15511-03900	Every 1000 hrs after the initial 250 hrs.
	Pilot line filter		15512-00601	
	Air breather filter		Applicable machine models 185000001 to 185001544 15520-02715 Applicable machine models 185001545 or later 15520-05002	Every 1000 hrs.
Engine lubrication system	Engine oil filter	Cartridge	Y129150-35153 <TB285>	Every 250 hrs.
		Element	I8-98018-8580 <TB290>	
Fuel system	Fuel filter	Cartridge	Y129907-55801 <TB285>	Every 500 hrs.
	Water separator filter	Cartridge	Y129917-55850 <TB285>	
		Element	Y41650-502320 <TB285> If equipped with filter for high sulfur fuel	
	Pre-fuel filter	Element	15520-02910 <TB290>	
	Main fuel filter		I8-98143-0410 <TB290>	
	Feed pump filter	Repair kit	I8-98173-1650 <TB290>	
Air cleaner system	Air cleaner	Primary (Outer) element	19111-13001	Every 1000 hrs. or after 6 cleanings (whichever comes first)
		Secondary (Inner) element	19111-13002	When the primary elements are replaced.
AC system	Receiver dryer		19115-13660	Every 2 years
	Circulation filter	Element	19115-13811	Once a year or if clogging remains after cleaning
	Ventilation filter		19115-13680	

LIST OF TOOLS (IF EQUIPPED)

Code	Part name	Part No.	Remarks
1	Spanner	Y28110-100120	10 - 12
2	Spanner	Y28110-140170	14 - 17
3	Screwdriver	Y104200-92350	(+) (–) replaceable shank
4	Filter wrench	Y119640-92750 16919-03560	<TB285> <TB290>
5	Hammer	16903-00330	3/4
6	Monkey wrench	16904-00250	250 mm
7	Pliers	16905-00200	200 mm
8	Spanner	16900-01013	10-13
9	Spanner	16900-01922	19-22
10	Spanner	16900-02427	24-27
11	Spanner	16900-02730	27-30
12	Spanner	16900-03236	32-36
13	Spanner	16901-00041	41
14	Hex. wrench	16906-00500	5 mm
15	Hex. wrench	16906-00600	6 mm
16	Hex. wrench	16906-00800	8 mm
17	Hex. wrench	16906-01000	10 mm
18	Hex. wrench	16906-01200	12 mm
19	Tool case	16914-00005	
20	Case	16919-00001	
21	Grease gun	16910-60610	500 cc
22	Drain connector	15545-12601	

LIST OF TIGHTENING TORQUES

Nuts and Bolts (for ISO strength category 10.9)

Tighten nuts and bolts at the torques shown on the table below, unless otherwise specified.

- The tightening torques used for the mounted plastic covers are not listed in the table below. Consult your sales or service dealer for details. They will be damaged if over tightened.
- When replacing nuts and bolts, replace them with nuts and bolts of the same size and standards.
- Tighten nuts and bolts alternately (top, bottom, left then right) or in 2 or 3 times so that they are evenly tightened.

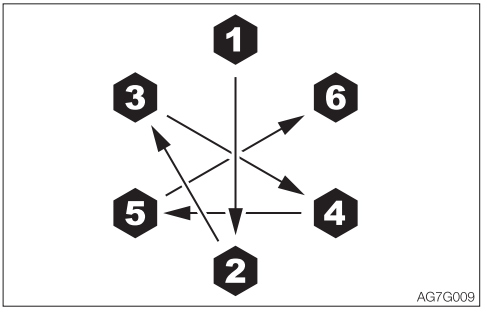

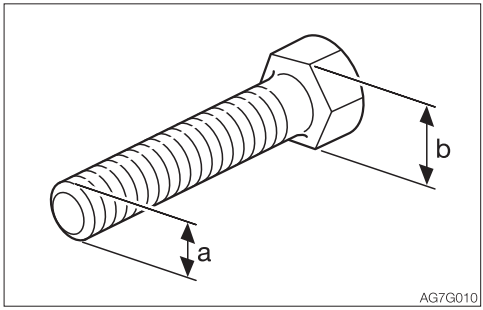

Classification	Head width (b)	Size (a) x pitch	Tightening torque	
			General connection points	
	mm	mm	N·m	ft-lb.
Coarse	10	M6 x 1.0	9.8±0.5	7.2±0.4
	12, 13	M8 x 1.25	22.6±1.1	16.6±0.8
	14, 17	M10 x 1.5	47.1±2.4	34.7±1.7
	17, 19	M12 x 1.75	83.4±4.1	61.5±3.0
	19, 22	M14 x 2.0	134.4±6.7	99.1±4.9
	22, 24	M16 x 2.0	207.9±10.4	153.3±7.7
	27, 30	M20 x 2.5	410.9±20.5	303.1±15.1
Fine	12, 13	M8 x 1.0	24.5±1.2	18.1±0.9
	14, 17	M10 x 1.25	50±2.5	36.9±1.8
	17, 19	M12 x 1.5	87.3±4.3	64.4±3.2
	19, 22	M14 x 1.5	135.3±6.8	99.8±5.0
	22, 24	M16 x 1.5	220.6±11	162.7±8.1
	27, 30	M20 x 1.5	452.1±22.6	333.4±16.6

SAFETY-CRITICAL PARTS

To use the machine safely, periodically perform inspection and maintenance. The safety-critical parts listed below must be periodically replaced for an increased safety.
Serious injury or a fire could result if they are worn or damaged.

List of safety-critical parts

Unit		Safety-critical parts to be replaced periodically	When to replace
Fuel system		Fuel hoses	Every 2 years
		Packing on fuel filler cap	
Cooling system		Rubber hoses	
Heater & AC systems		Heater hoses	
		Air conditioner hoses	
Hydraulic system	Main body	Hydraulic hoses (pump - delivery)	
		Hydraulic hoses (pump - suction)	
		Hydraulic hoses (slew motor)	
		Hydraulic hoses (travel motor)	
	Working equipment	Hydraulic hoses (boom cylinder piping)	
		Hydraulic hoses (second boom cylinder piping)	
		Hydraulic hoses (arm cylinder piping)	
		Hydraulic hoses (bucket cylinder piping)	
		Hydraulic hoses (swing cylinder)	
		Hydraulic hoses (blade cylinder)	
		Hydraulic hoses (angle blade cylinder)	
		Hydraulic hoses (tension cylinder)	
		Hydraulic hoses (pilot valve)	
		Hydraulic hoses (auxiliary piping)	
		Seat belt	Every 3 years
		Non-slip sheet	

The material of the safety-critical part listed above tends to change over time and cause wear or deterioration. It is difficult to determine the degree of deterioration at the periodic inspection, and thus they need to be replaced with new ones after a certain time to maintain their proper performance even if they appear in good condition. Note that regardless of the replacement schedule, replacement must be performed immediately if a symptom of wear is found. If a hose clamp is deformed or cracked, replace it together with the hose immediately. When replacing the safety-critical parts, ask your sales or service dealer.
In addition to the safety-critical parts, inspect the hydraulic hoses and retighten or replace as necessary. When replacing the hydraulic hoses, replace the O-rings and seals at the same time.
Check the fuel and hydraulic hoses according to the periodic schedule described below. Refer to “Maintenance”.

Type of inspection	Inspection item
Daily inspection	Leakage from the connecting parts of hydraulic or fuel hoses Damage to cab - replace*
Monthly inspection	Leakage from the connecting parts of hydraulic or fuel hoses Damaged hydraulic or fuel hoses (cracks, wear and tear)
Annual inspection	Leakage from the connecting parts of hydraulic or fuel hoses Deteriorated, twisted, damaged hydraulic or fuel hoses (cracks, wear and tear) or hoses in contact with other parts of the machine

*: Cab parts No.
Applicable machine models
185000001 to 185000283
190000001 to 190000233
05686-60100

185000284 to 185000757
190000234 to 190000833
05686-63100

185000758 or later
190000834 or later
05686-00000

MAINTENANCE LIST <TB285>

Inspection and maintenance item	Page
Walk-around inspection	
Inspecting by opening the engine hood and covers	5-16
Inspecting by walking around the machine	5-17
Inspecting while sitting in the operator's seat	5-17
Daily inspection (every 10 hours)	
Inspecting and replenishing the coolant	5-18
Inspecting and replenishing the engine oil	5-19
Inspecting the water separator and the fuel filters	5-20
Inspecting the fuel level	5-21
Inspecting the hydraulic oil tank level and replenishing	5-22
Lubricating the working equipment	5-23
After the initial 50 hours (only for new machines)	
Inspecting and adjusting the fan belt	5-24
Inspecting and adjusting the compressor belt (AC)	5-26
Every 50 hours	
Inspecting the crawler belt tension	5-28
Lubricating the slew bearing	5-30
Draining the water from the fuel tank	5-31
Inspecting the battery fluid level and replenishing	5-32
After the initial 250 hours (only for new machines)	
Replacing the hydraulic oil return filter	5-34
Replacing the pilot line filter	5-35
Replacing the travel motor gear oil*	5-36
Every 250 hours	
Inspecting and adjusting the fan belt	5-37
Inspecting and adjusting the compressor belt (AC)	5-37
Replacing the engine oil and the oil filter	5-38
Cleaning the air cleaner	5-40
Cleaning the radiator fins and the oil cooler fins	5-41
Cleaning the air filters (air conditioner)	5-42
Cleaning the condenser (AC)	5-43
Inspecting the refrigerant (gas) level (AC)	5-44

*: If the percentage of the traveling time within the total operating time is high, replace the gear oil earlier than the specified time.
(AC): Air conditioner

Inspection and maintenance item	Page
Every 500 hours	
Replacing the fuel filter	5-46
Replacing the water separator filter (If equipped with filter for high sulfur fuel)	5-47
Inspecting the slew pinion gear	5-50
Every 1000 hours	
Replacing the hydraulic oil return filter	5-51
Replacing the pilot line filter	5-51
Replacing the travel motor gear oil *	5-51
Replacing the air cleaner element	5-53
Replacing the air breather filter	5-54
Inspecting and adjusting the engine valve clearance	5-54
Every 1500 hours	
Inspecting, cleaning and checking operation of the engine fuel injectors	5-55
Inspecting the crankcase breather system	5-55
Cleaning the EGR cooler (cleaning the water side and exhaust air passage blower)	5-55
Every 2000 hours	
Cleaning the engine cooling system	5-56
Lapping the engine valve seats (if necessary)	5-56
Every 3000 hours	
Inspecting the turbocharger (blow wash as necessary)	5-56
Inspecting, cleaning and checking operation of the EGR valve	5-56
Cleaning the EGR lead valve	5-56
Every 4000 hours	
Replacing the hydraulic oil and cleaning the suction strainer	5-57
When Required	
Replacing the bucket teeth and the side cutters	5-61
Replacing the bucket	5-63
Adjusting the gap between the bucket and arm (If equipped)	5-65
Inspecting and replenishing the windshield washer fluid	5-66
Draining the water from the water separator	5-66
Lubricating the levers and pedals	5-67
Inspecting the rubber crawlers	5-68
Replacing the rubber crawlers	5-69
Every 2 years	
Replacing the receiver dryer	5-71

*: If the percentage of the traveling time within the total operating time is high, replace the gear oil earlier than the specified time.

MAINTENANCE LIST <TB290>

Inspection and maintenance item	Page
Walk-around inspection	
Inspecting by opening the engine hood and covers	5-16
Inspecting by walking around the machine	5-17
Inspecting while sitting in the operator's seat	5-17
Daily inspection (every 10 hours)	
Inspecting and replenishing the coolant	5-18
Inspecting and replenishing the engine oil	5-19
Inspecting the water separator and the fuel filters	5-20
Inspecting the fuel level	5-21
Inspecting the hydraulic oil tank level and replenishing	5-22
Lubricating the working equipment	5-23
After the initial 50 hours (only for new machines)	
Inspecting and adjusting the fan belt	5-24
Inspecting and adjusting the compressor belt (AC)	5-26
Every 50 hours	
Inspecting the crawler belt tension	5-28
Lubricating the slew bearing	5-30
Draining the water from the fuel tank	5-31
Inspecting the battery fluid level and replenishing	5-32
After the initial 250 hours (only for new machines)	
Replacing the hydraulic oil return filter	5-34
Replacing the pilot line filter	5-35
Replacing the travel motor gear oil*	5-36
Every 250 hours	
Inspecting and adjusting the fan belt	5-37
Inspecting and adjusting the compressor belt (AC)	5-37
Replacing the engine oil and the oil filter	5-38
Cleaning the air cleaner	5-40
Cleaning the radiator fins and the oil cooler fins	5-41
Cleaning the air filters (air conditioner)	5-42
Cleaning the condenser (AC)	5-43
Inspecting the refrigerant (gas) level (AC)	5-44

*: If the percentage of the traveling time within the total operating time is high, replace the gear oil earlier than the specified time.
(AC): Air conditioner

Inspection and maintenance item	Page
Every 500 hours	
Replacing the fuel filter	5-46
Cleaning the feed pump filter	5-48
Inspecting and cleaning the supply pump strainer	5-49
Inspecting the slew pinion gear	5-50
Every 1000 hours	
Replacing the hydraulic oil return filter	5-51
Replacing the pilot line filter	5-51
Replacing the travel motor gear oil *	5-51
Cleaning the engine cooling system	5-51
Replacing the air cleaner element	5-53
Replacing the air breather filter	5-54
Inspecting and adjusting the engine valve clearance	5-54
Inspecting the engine compression pressure	5-54
Inspecting and cleaning the engine starter and the alternator	5-54
Every 1500 hours	
Cleaning the EGR cooler (cleaning the water side and exhaust air passage blower)	5-55
Inspecting the turbocharger (blow wash as necessary)	5-55
Inspecting and cleaning the EGR valve	5-55
Cleaning the EGR lead valve	5-55
Every 4000 hours	
Replacing the hydraulic oil and cleaning the suction strainer	5-57
When Required	
Replacing the bucket teeth and the side cutters	5-61
Replacing the bucket	5-63
Adjusting the gap between the bucket and arm (If equipped)	5-65
Inspecting and replenishing the windshield washer fluid	5-66
Draining the water from the water separator	5-66
Lubricating the levers and pedals	5-67
Inspecting the rubber crawlers	5-69
Replacing the rubber crawlers	5-69
Every 2 years	
Replacing the receiver dryer	5-71

*: If the percentage of the traveling time within the total operating time is high, replace the gear oil earlier than the specified time.

WALK-AROUND INSPECTION

Perform the following inspections every day before starting the engine for the first time.

⚠ WARNING

- **Before operating, perform the walk-around inspections and make repairs immediately where necessary.**
- **Be sure to secure the engine hood or cover before working the inside. Do not keep the hood or cover open on a windy day or if the machine is parked on a slope.**

Before starting the engine, look around the machine and clean any combustibles from the surroundings of the engine. Also, inspect if oil or water is leaking and any nuts, bolts or electric wiring are loosened or damaged.

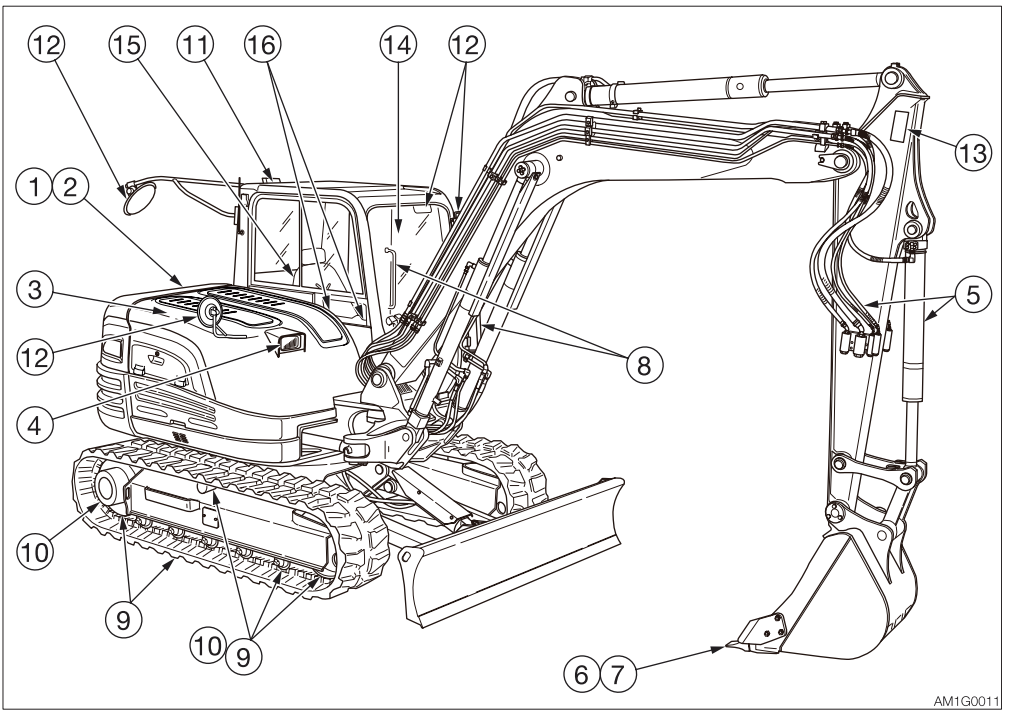

INSPECTING BY OPENING THE ENGINE HOOD AND COVERS

1. Check for any twigs, leaves, oil or other combustible materials around the engine and battery.
2. Check for oil or engine coolant water leakage around the engine.
3. Check for oil leakage from the hydraulic oil tank, hydraulic devices, hoses or connections.

INSPECTING BY WALKING AROUND THE MACHINE

4. Check lights for dirt, damage and burnt out bulbs.
5. Check attachments and hoses for damage.
6. Check the bucket, bucket teeth and side cutter for wear, damage and looseness.
7. Check the hook, slip stopper and hook mount of buckets with hooks for damage. (Option)
8. Check the handrail, the steps and the slip-resistant surfaces for damage and loose bolts.
9. Check the crawlers, carrier rollers, track rollers, idlers and sprockets for damage, wear and loose bolts.
10. Check for oil leakage from the travel motor, carrier rollers, track rollers and idlers.
11. Check the cab and guard for damage and loose nuts and bolts.
12. Check the mirrors for dirt or damage, and adjust them.
13. Check the labels for dirt and damage.

INSPECTING WHILE SITTING IN THE OPERATOR'S SEAT

14. Check the windshield for dirt or damage.
15. Check the seat and seat belt for dirt or damage.
    Check the operator's seat for dirt, oil or other combustible materials.
16. Check the monitor, instruments and switches for dirt or damage.

DAILY INSPECTION (EVERY 10 HOURS)

Perform the following inspections every day before starting the engine for the first time.

⚠ WARNING

- **Before operating, perform the daily inspections and make repairs immediately where necessary.**
- **Be sure to secure the engine hood or cover before working the inside. Do not keep the hood or cover open on a windy day or if the machine is parked on a slope.**

INSPECTING AND REPLENISHING THE COOLANT

⚠ WARNING

- **Do not remove the radiator cap or the drain plug when the cooling water is hot. Stop the engine and wait until the engine and the radiator cool before slowly loosening the radiator cap and the drain plug to remove them.**
- **Always wear the protective goggle and gloves when handling coolant (antifreeze). If any coolant (antifreeze) comes in contact with eyes or skin, wash it off with clean water. Otherwise, it could result in injures.**

Inspection

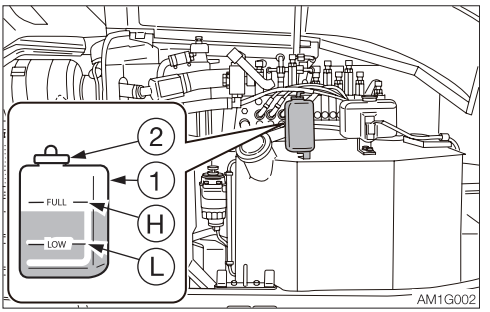

1. Open the fuel lid.
2. Inspect the cooling water level in the reserve tank (1).
   The level should be between the upper limit (H) and the lower limit (L).
   If it is below the lower limit (L), replenish.

Replenishing

1. Open the side cover.
2. Remove the cap (2) of the reserve tank (1).
3. Add cooling water up to the upper limit (H) of the reserve tank (1).

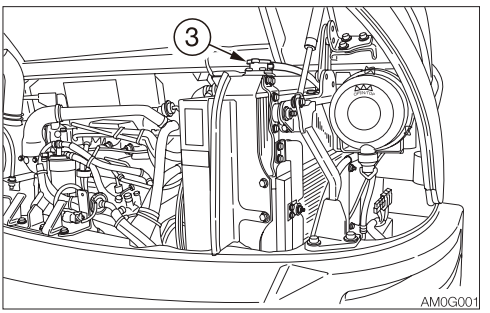

   If the reserve tank (1) is found empty at the inspection, check for water leakage and then the water level in the radiator (3). Add water to the radiator (3) as required, and then to the reserve tank (1).
4. Install the cap (2).

Note: Use only clean water (soft water), such as tap water, to replenish the coolant loss due to evaporation. If the coolant loss is due to leakage, replenish the mixture of antifreeze and clean water (soft water) prepared using the same mixing ratio used for the current coolant.

INSPECTING AND REPLENISHING THE ENGINE OIL

⚠ WARNING

Stop the engine and allow the machine to cool down before performing maintenance.

Inspection

<TB285>

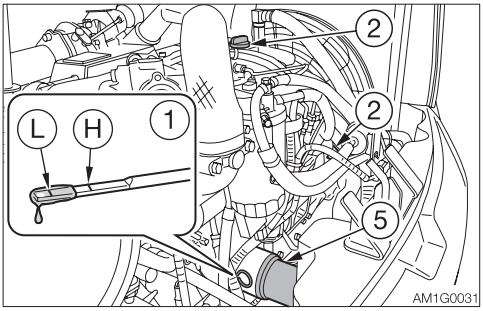

<TB290>

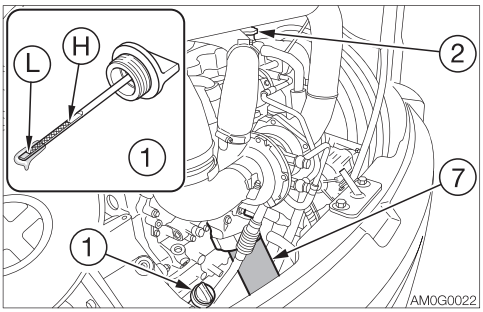

1. Open the engine hood.
2. Take out the dipstick (1) and wipe the oil off with a rag.
   The dipstick (1) of TB290 is attached to the oil filler cap.
3. Fully reinsert the dipstick (1), and then pull it back out.
   For TB290, do not screw the cap portion of the dipstick (1) into the oil fill hole, but leave it on the lip of the hole and pull out the dipstick (1).
4. Check the oil on the dipstick (1).
   The level should be between the upper limit (H) and the lower limit (L).
   If it is below the lower limit (L), replenish.

Replenishing

1. Remove the oil filler cap (2).
   For TB290, oil can be replenished through the oil fill hole of the dipstick (1).
2. Add oil up to between the upper limit (H) and the lower limit (L) of the dipstick (1).
   Problems could arise if the oil level is either too low or too high.
3. Tighten the oil filler cap (2).
4. Start the engine, run it at low idle for about 5 minutes, then stop it.
5. After about 10 to 20 minutes, inspect the oil level.

INSPECTING THE WATER SEPARATOR AND THE FUEL FILTERS

⚠ WARNING

- **Do not smoke or permit open flames while handling fuel or working on the fuel system.**
- **Stop the engine in a well-ventilated place and allow it to cool down before performing maintenance.**
- **Clean up spilled fuel immediately.**

Water separator

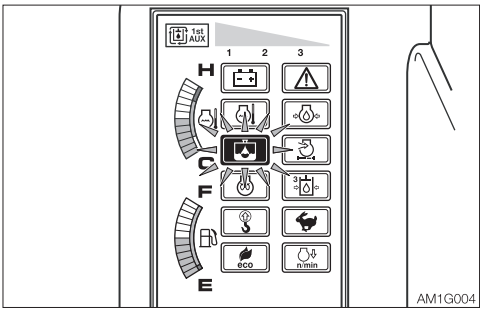

1. Turn the starter switch to the ON position.
2. Inspect the water separator warning lamp.
3. If the warning lamp is flashing, drain the water.
   Refer to “Draining the water from the water separator” on page 5-66.

Fuel filters <TB290>

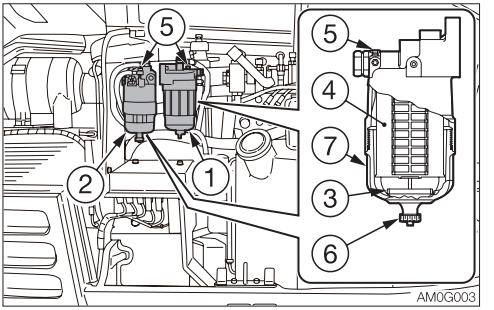

1. Open the fuel lid or the side cover.
2. Check if there is water in the pre-fuel filter (1) and the main fuel filter (2).
   If water collects in the filter, the float (red ring) (3) goes up. Be sure to drain water before the float (3) goes up to the element (4).
3. Loose the vent plug (5) and then the drain plug (6) to discharge water collected inside.
4. After drainage of water, tighten each plug and bleed air from the fuel system.
   Refer to “Bleeding air from the fuel system” on page 6-8.

INSPECTING THE FUEL LEVEL

⚠ WARNING

- **Do not smoke or permit open flames while handling fuel or working on the fuel system.**
- **Never remove the fuel cap or add fuel when the engine is running or still hot. Do not spill fuel on the hot surface of the machine.**
- **Fill the fuel tank in a well ventilated place.**
- **Clean up spilled fuel immediately.**
- **Do not fill the fuel tank to capacity. Allow room for oil expansion.**
- **Securely tighten the fuel filler cap.**
- **Use the correct grade of fuel for the operating season.**

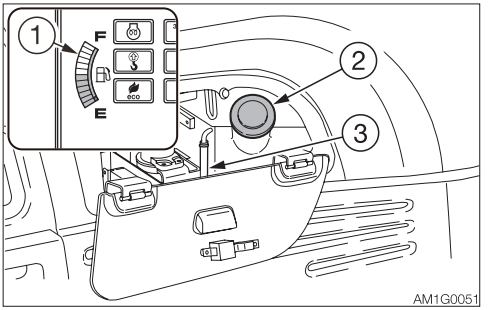

1. Check the fuel level using the fuel gauge (1).
   F: Tank is full.
   E: Tank is empty.
2. If the fuel level is low, open the fuel lid.
3. Add fuel from the fuel filler port (2) while watching the sight gauge (3).
   Refer to “Fuel filler port” on page 2-5.

INSPECTING THE HYDRAULIC OIL TANK LEVEL AND REPLENISHING

⚠ WARNING

Oil may spurt out if caps or filters are removed or pipes are disconnected before releasing the pressure in the hydraulic system.
- **Press the air breather button to relieve the internal pressure from the tank.**

Inspection

The oil level changes with the oil temperature. Inspect the oil by maintaining the machine at posture shown in the figure at the next.
- Machine posture for inspecting the hydraulic oil level

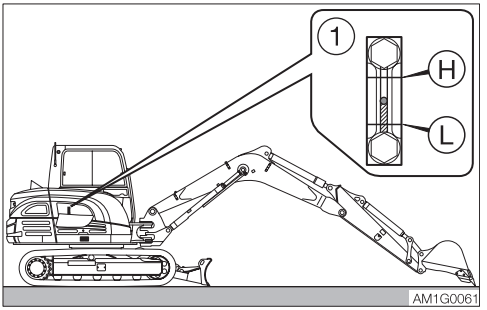

1. Start the engine and run it at low speed.
2. Fully retract the cylinders (arm and bucket), and lower the bucket to the ground.
   For the 2-piece boom, fully retract the cylinders (adjust, arm and bucket), and lower the bucket to the ground.
3. Lower the dozer blade, and then stop the engine.
4. Open the fuel lid.
5. Inspect the oil level using the sight gauge (1).
   - When the oil temperature is about 20°C (68°F):
     The level should be between the upper limit (H) and the lower limit (L).
     If it is below the lower limit (L), replenish.
   - When the oil temperature is about 50 to 80°C (122 to 176°F):
     The level should be slightly below the upper limit (H).

Replenishing

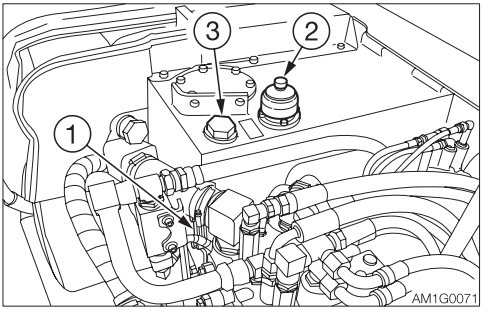

IMPORTANT: Do not fill up to the level higher than the upper limit (H). It will damage the hydraulic circuits or result in oil spurting. If accidentally done, stop the engine and wait the hydraulic oil to cool, and then let the excessive oil to drain from the drain plug.

1. Open the side cover.
2. Press the air breather button (2) to relieve the internal pressure from the tank.
3. Remove the plug (3).
4. Add the hydraulic oil up to the middle point of the sight gauge (1).
5. Tighten the plug (3).

LUBRICATING THE WORKING EQUIPMENT

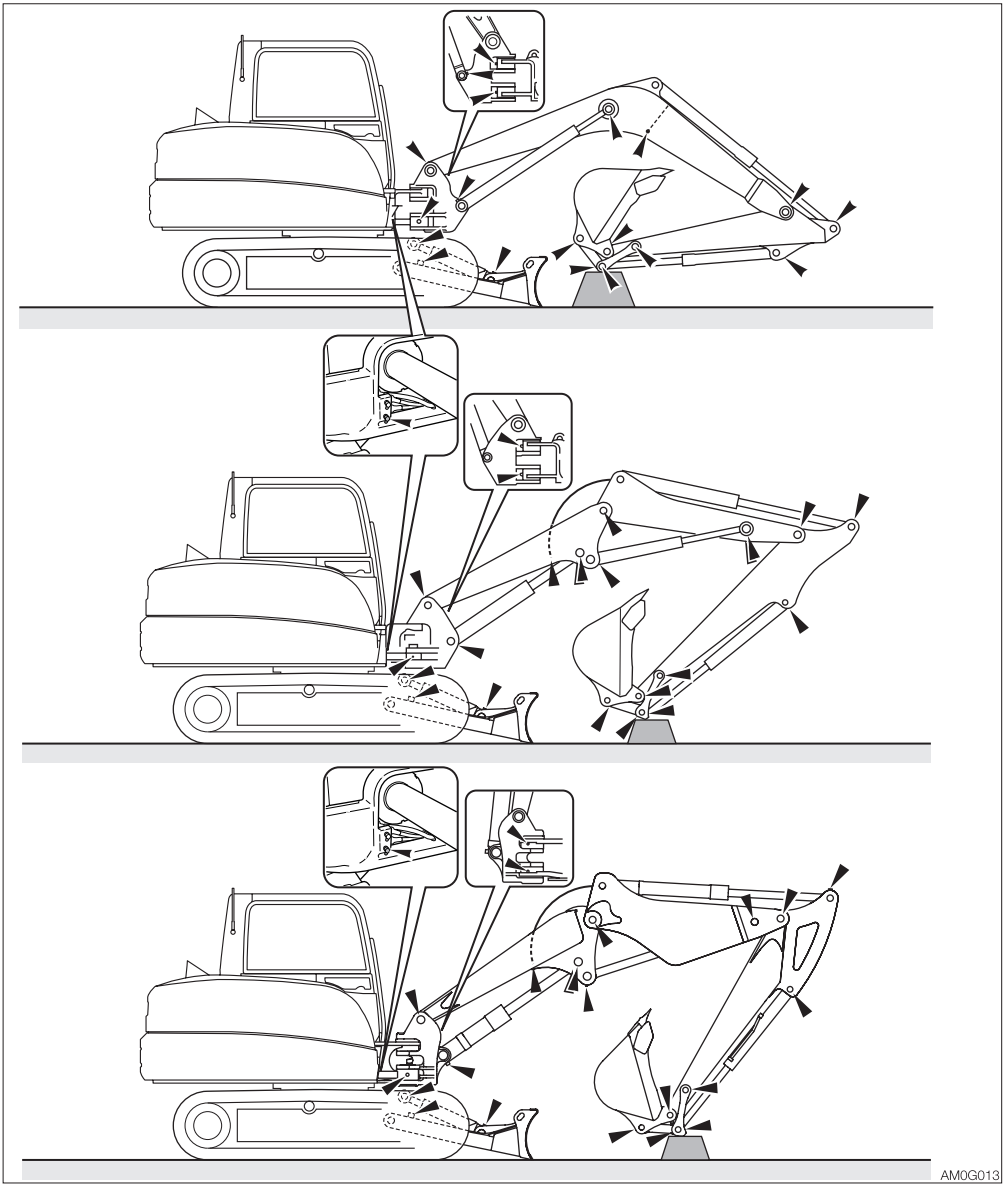

1. Keep the machine configuration as shown in the diagram above, lower the working equipment to the ground, and then stop the engine.
2. Use the grease gun to lubricate the grease fittings.
3. Wipe off the excess grease.

AFTER THE INITIAL 50 HOURS (ONLY FOR NEW MACHINES)

INSPECTING AND ADJUSTING THE FAN BELT

⚠ WARNING

Stop the engine and allow the machine to cool down before performing maintenance.

- **The engine, muffler, radiator, hydraulic lines, sliding parts and many other parts of the machine are hot immediately after the engine is stopped. Touching these parts will cause burns.**

IMPORTANT: The loose belts could result in bad battery charge, overheat of engine or early wear of belt. Too tight belts could damage the water pump or bearing and belt used to drive the alternator.
IMPORTANT: Do not let any oil or grease get on the belt.

Inspection

1. Open the engine hood.

<TB285>

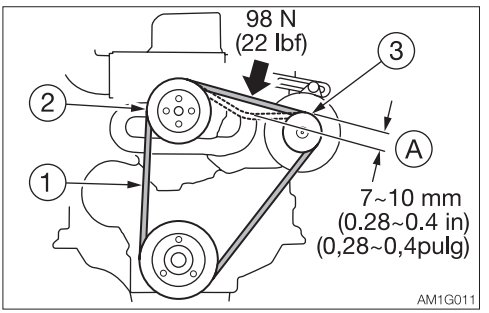

<TB290>

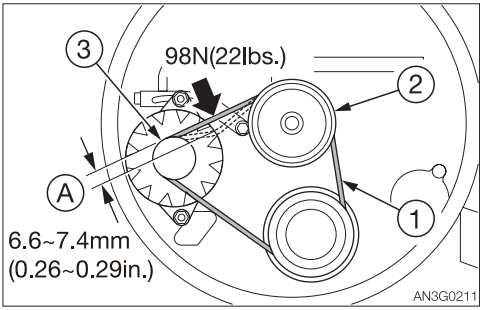

2. Press the fan belt (1) at the midpoint between the fan pulley (2) and alternator pulley (3) to check the tension (approx. 98 N or 22 lbf).
   <TB285>
   The slack (A) should be 7 to 10 mm (0.28 to 0.4 in).
   <TB290>
   The slack (A) should be 6.6 to 7.4 mm (0.26 to 0.29 in).
3. Inspect the fan belt (1) and replace if it is as follows.
   - There are cuts or cracks.
   - The belt is worn and touches the bottom of the V groove in the pulley.
   - The belt stretched too loose to be adjusted.

Adjustment
<TB285>

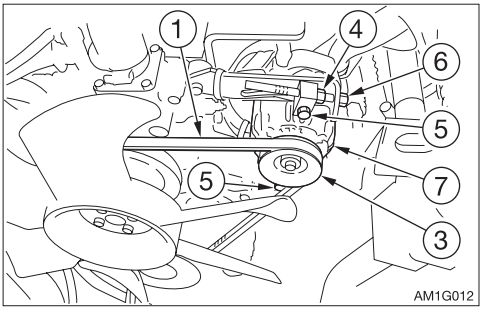

<TB290>

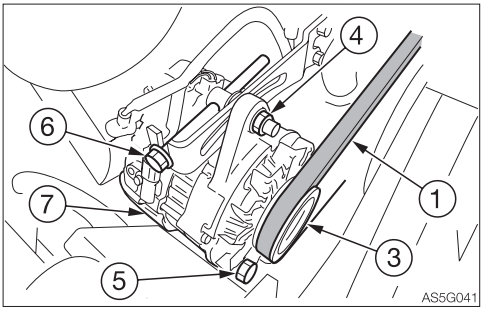

1. Loosen the bolt (5) and locking nut (4).
2. Turn the adjustment bolt (6) to move the alternator (7) and to adjust the tension of the fan belt (1).
   · Tighten: Clockwise
   · Loosen: Counterclockwise
3. Tighten the bolt (5) and locking nut (4).
   Tightening torque:
   <TB290>
   · Locking nut (4) 25 N·m (18.1 ft-lb.)
   · Bolt (5) 51N·m (37.6 ft-lb.)

Note: When replacing with a new belt, run the engine at low idle speed for about 3 to 5 minutes to break in the new belt, before adjusting the tension.

INSPECTING AND ADJUSTING THE COMPRESSOR BELT (AC)

⚠ WARNING

- **Stop the engine and allow the machine to cool down before performing maintenance.**
  - **The engine, muffler, radiator, hydraulic lines, sliding parts and many other parts of the machine are hot immediately after the engine is stopped. Touching these parts will cause burns.**
- **The high-pressure pipes of the air conditioner can be very hot (80 to 120°C or 176 to 248°F). Be careful not to burn yourself.**

IMPORTANT: Do not let any oil or grease get on the belt. It will cause the belt to slip, decrease the cooling capacity or shorten the service life of the air conditioner.

If the belt is too slack, it will slip and vibrate, resulting in decreased cooling capacity. The service life of the air conditioner also will be shortened. Adjust the belt tension to the standard value.
For TB285, 294 to 392 N or 66 to 88 lbf.
For TB290, 432.2 to 449.8 N or 97.2 to 101.1 lbf

<TB285>

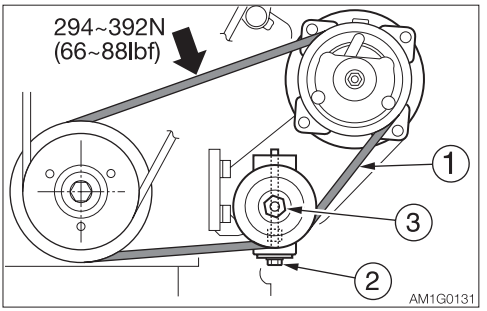

<TB290>

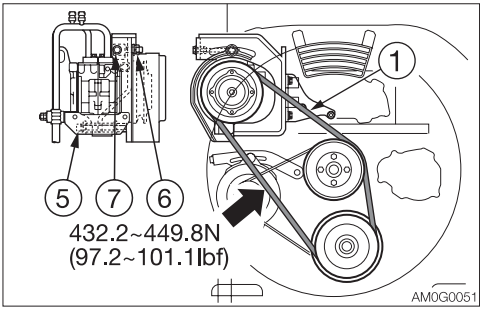

Inspection
<TB285>

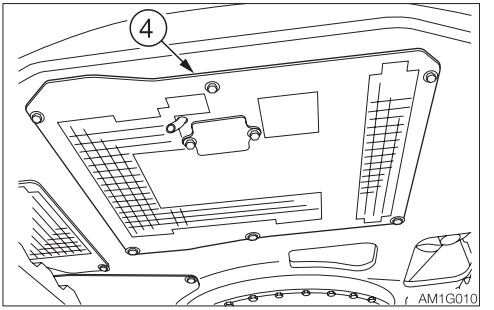

1. Loosen the bolts and remove the under cover (4). <TB285>

1. Open the engine hood. <TB290>
2. Measure the belt (1) tension using the belt tension gauge. The belt tension is normal if the belt tension gauge indicates the following values.
   For TB285, 294 to 392 N or 66 to 88 lbf.
   For TB290, 432.2 to 449.8 N or 97.2 to 101.1 lbf

Adjustment
<TB285>
If the belt tension is not normal, adjust it with the adjuster bolt (2).
1. Loosen the locking nut (3).
2. Turn the adjuster bolt (2) as follows.
   · Tighten: Clockwise
   · Loosen: Counterclockwise
3. Tighten the locking nut (3) after adjustment.
   Tightening torque:
   · Locking nut (4) 31.4 to 45.1 N·m (23.2 to 33.3 ft-lb.)

<TB290>
If the belt tension is not normal, tilt the compressor to adjust the tension.
1. Loosen the fixing bolt (5) and fixing nut (6).
2. Turn the adjuster bolt (7) as follows.
   · Tighten: Clockwise
   · Loosen: Counterclockwise
3. Tighten the fixing bolt (5) and fixing nut (6) upon completion of adjustment.

Note: When replacing with a new belt, run the engine at low idle speed for about 3 to 5 minutes to break in the new belt, before adjusting the tension again.

Replacing
Replace the belt in the following cases:
· There are cuts or cracks.
· The belt is worn and touches the bottom of the V groove in the pulley.
· The belt stretched too loose to be adjusted.

EVERY 50 HOURS

INSPECTING THE CRAWLER BELT TENSION

Note: This machine uses a hydraulic cylinder to adjust the tension of the crawler belts. It is not necessary to regularly perform adjustments of the crawler belt tension.

If the tension is too loose and the track comes off, the hydraulic cylinder is likely faulty. Ask your sales or service dealer for repairs.

MEMO

LUBRICATING THE SLEW BEARING

⚠ WARNING

Do not slew while lubricating. Doing so is dangerous, as you may get caught in the machine.

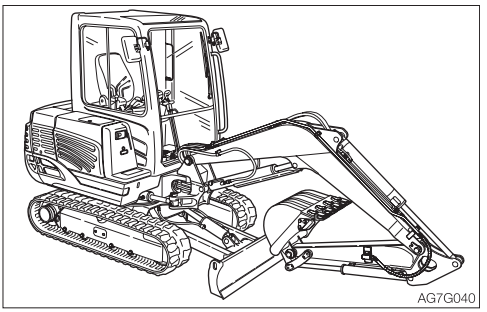

1. Stop the engine with the machine in the posture shown on the figure above.

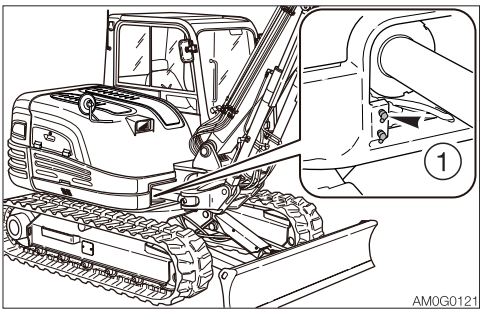

2. Use the grease gun to grease the grease fitting (1).

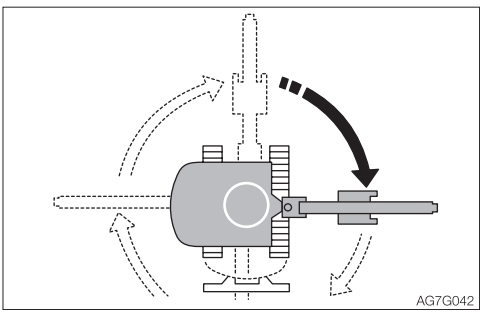

3. Start the engine, lift the bucket and slew clockwise 90°.
4. Lower the bucket to the ground, and then stop the engine.
5. Repeat the steps 2 to 4 above three times.
6. Wipe off the grease expelled from the slew bearing and grease fitting.

DRAINING THE WATER FROM THE FUEL TANK

⚠ WARNING

- **Do not smoke or permit open flames while handling fuel or working on the fuel system.**
- **Never remove the fuel cap or add fuel when the engine is running or still hot. Do not spill fuel on the hot surface of the machine.**
- **Fill the fuel tank in a well ventilated place.**
- **Do not fill the fuel tank to capacity. Allow room for oil expansion.**
- **Clean up spilled fuel immediately.**
- **Securely tighten the fuel filler cap.**
- **Use the correct grade of fuel for the operating season.**

Do the draining operation before starting the machine.

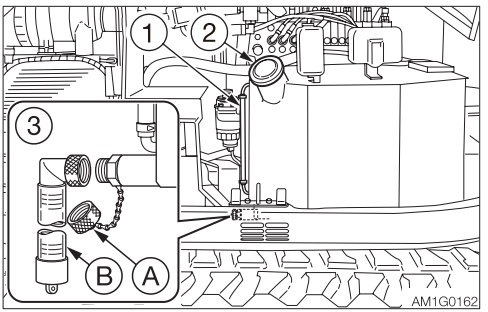

1. Open the side cover.
2. Remove the fuel filler cap (2).
3. Place a pan under the drain valve (3).
4. Remove the cap (A), install the connector (B), and then drain the water and sediment buildup in the bottom of the tank (the water comes out when the screw is tightened).
5. Remove the connector (B) and install the cap (A).
6. Add fuel while watching the sight gauge (1).
7. Tighten the fuel filler cap (2).
8. Close the side cover and lock it with the key.
9. Bleed air.

Bleeding air from the fuel system
Refer to “Bleeding air from the fuel system” on page 6-8.

Note: Air in the fuel system causes the engine to fail to start or to have problems. Bleed air when the fuel tank is emptied, using the same procedure above.

INSPECTING THE BATTERY FLUID LEVEL AND REPLENISHING

⚠ DANGER

- Do not use the battery when the fluid level is below the lower level limit. Doing so will hasten the deterioration of the internal portions of the battery and shorten the battery life. It also can cause rupturing (explosion).
- Batteries generate flammable hydrogen gas which may explode. Keep away from flame, sparks, fire or lighted cigarettes.
- Use a dampened cloth to clean above the fluid level line and check the fluid level. Do not clean with a dry cloth; otherwise it can cause static electricity to build up, resulting in ignition or explosion.

⚠ WARNING

- Wear protective goggle and clothing when working with batteries.
- Do not add the distilled water above the upper level limit. Doing so could cause the fluid to leak. This fluid can cause skin damage if contacted, or can cause the machine components to corrode.
- Batteries contain sulfuric acid which will damage eyes or skin if contacted.
  - If eye contact occurs, flush immediately with clean water and get prompt medical attention.
  - If accidentally swallowed, drink large quantities of water or milk and call a physician immediately.
  - If acid contacts skin or clothing, wash off immediately with a lot of water.

Inspection

IMPORTANT: Check the fluid level of all cells following the steps below, even when the fluid level can be checked using the indicator.

1. Open the engine hood.

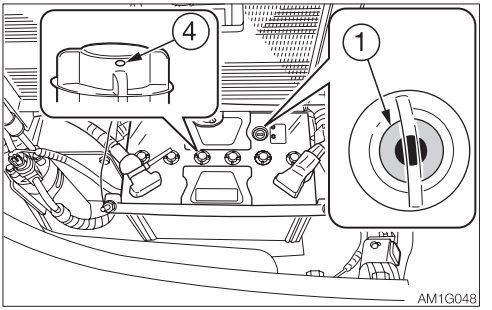

2. Inspect the indicator (1).
   - Blue: Good
   - White: Charging needed
   - Red: Insufficient battery fluid
3. Inspect the fluid level.
   The fluid level must be between the upper level line (H) and lower level line (L). If not, add distilled water up to the line (H).

- If the fluid level cannot be checked by fluid level lines:

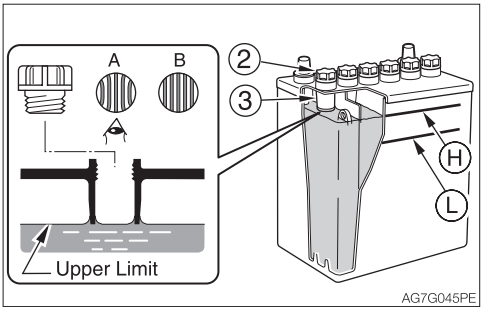

Remove the caps (2) and look into the fluid filler holes to check the fluid level. If the fluid is below the sleeve (3), be sure to add distilled water up to the bottom edge of the sleeve (3).

Proper level (A)
If the fluid reaches up to the bottom edge of the sleeve (3), the surface tension causes the fluid to swell and the plate appears as if it is distorted.

Level too low (B)
If fluid does not reach up to the bottom edge of the sleeve (3), the plate looks laminar, not distorted.

4. Check the terminals for looseness and dirt.

Replenishing
When adding distilled water, do so before starting operations in order to prevent freezing.
1. Remove the caps (2), and add distilled water until the upper level (H).
2. Check that the indicator (1) turns blue.
3. Clean the exhaust holes (4) on the cap, then tighten the caps (2) securely.

AFTER THE INITIAL 250 HOURS (ONLY FOR NEW MACHINES)

REPLACING THE HYDRAULIC OIL RETURN FILTER

⚠ WARNING

- Stop the engine and allow the machine to cool down before performing maintenance.
  - The engine and the hydraulic system and many other parts of the machine are hot immediately after the engine is stopped. Touching these parts will cause burns.
  - The hydraulic oil is also hot and under high pressure.
    Be careful not to touch the hydraulic oil when loosening the cap or plug. Working on the machine under these conditions could result in burns or injuries due to the hot oil spurting out.
- Oil may spurt out if caps or filters are removed or pipes are disconnected before releasing the pressure in the hydraulic system.
  - Press the air breather button to relieve the internal pressure from the tank.
  - When removing plugs or screws, or when disconnecting hoses, stand to the side and loosen them slowly to gradually release the internal pressure before removing.

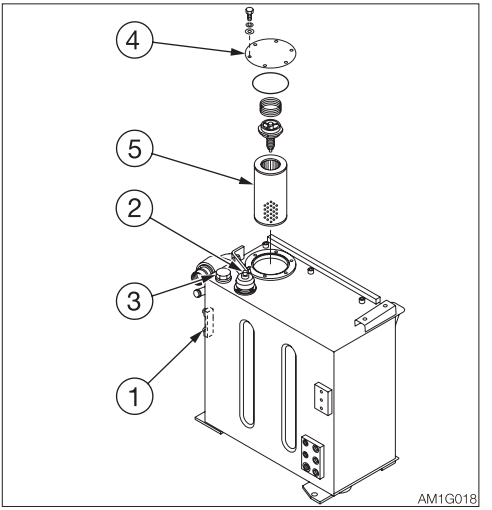

1. Open the side cover.
2. Press the air breather button (2) to relieve the internal pressure from the tank.
3. Loosen the bolts and remove the flange (4).
4. Remove the return filter (5).
5. Install a new return filter.
6. Install the flange (4) on its original position.
7. Inspect the level with the sight gauge (1), and replenish if the level is too low.
   Refer to “Inspecting the hydraulic oil tank level and replenishing” on page 5-22.

REPLACING THE PILOT LINE FILTER

⚠ WARNING

- **Stop the engine and allow each part of the machine to cool down before performing maintenance.**
  - **The engine, the hydraulic system and many other parts of the machine are hot immediately after the engine is stopped. Touching these parts will cause burns.**
  - **The hydraulic oil is also hot and under high pressure immediately after the engine is stopped. Be careful not to touch the oil when loosening the cap or plug. Working on the machine under these conditions could result in burns or injuries due to the hot oil spurting out.**
- **Oil may spurt out if caps or filters are removed or pipes are disconnected before releasing the pressure in the hydraulic system.**
  - **Press the air breather button to relieve the internal pressure from the tank.**
  - **When removing plugs or screws, or when disconnecting hoses, stand to the side and loosen them slowly to gradually release the internal pressure before removing.**

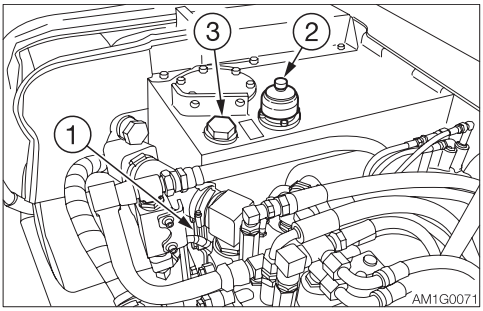

1. Open the side cover.
2. Press the air breather button (2) to relieve the internal pressure from the tank.

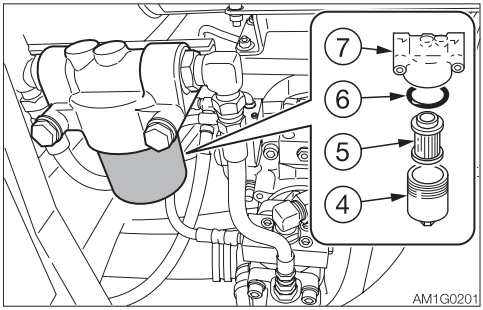

3. Open the engine hood.
4. Turn the case (4) counterclockwise and remove it.
5. Remove the element (5) and O-ring (6).
6. Clean the inside of the case (4).
7. Apply a thin layer of oil on the O-ring of the new filter.
8. Install the new element on the filter stand (7).
9. Apply a thin layer of oil on the new O-ring (6).
10. Install the new O-ring (6) and the case (4) on the filter stand (7).
    Tightening torque:78.5 ± 4.9 N·m (57.9 ± 3.6 ft-lb)
11. Inspect the level with the sight gauge (1) and replenish if the level is too low.
    Refer to “Inspecting the hydraulic oil tank level and replenishing” on page 5-22.

REPLACING THE TRAVEL MOTOR GEAR OIL

⚠ WARNING

- **Stop the engine and allow the machine to cool down before performing maintenance.**
  - **The travel motor is hot immediately after the engine is stopped. Touching it will cause burns.**
  - **The gear oil is also hot and under high pressure immediately after the engine is stopped. Be careful when loosening the plugs. Working on the machine under these conditions could result in burns or injuries.**
- **The pressure in the reduction gear case of travel motor may cause oil or the plug to fly out. Loosen the plug slowly to release the pressure.**

IMPORTANT: If the percentage of the traveling time within the total operating time is high, replace the gear oil earlier than the specified time.

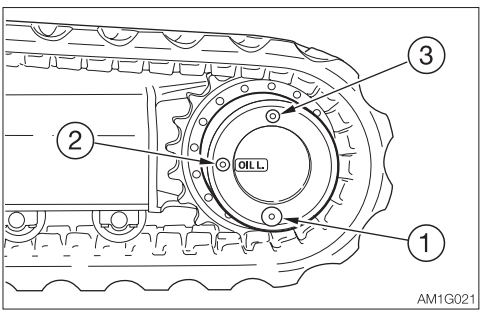

1. Set the travel motor so that plug (1) is at the very bottom.
2. Place a pan under the plug (1).
3. Remove the plugs (1), (2) and (3) and drain the oil.
4. Rewrap the plugs with new sealing tape.
5. Tighten the plug (1).
   - Tightening torque: 58.8 ± 9.8 N·m (43.4 ± 7.2 ft-lb.)
6. Add oil through the hole of the plug (3) until oil flows out of the hole of the plug (2).
7. Tighten the plugs (2) and (3).
   - Tightening torque: 58.8 ± 9.8 N·m (43.4 ± 7.2 ft-lb.)

EVERY 250 HOURS

INSPECTING AND ADJUSTING THE FAN BELT

Refer to “Inspecting and adjusting the fan belt” on page 5-24.

INSPECTING AND ADJUSTING THE COMPRESSOR BELT (AC)

Refer to “Inspecting and adjusting the compressor belt (AC)” on page 5-26.

REPLACING THE ENGINE OIL AND THE OIL FILTER

⚠ WARNING

Stop the engine and allow the machine to cool down before performing maintenance.

- **The engine, muffler, radiator, hydraulic lines, sliding parts and many other parts of the machine are hot immediately after the engine is stopped. Touching these parts will cause burns.**
- **The engine oil is also hot. Be careful not to touch the hydraulic oil when loosening the cap or plug. Working on the machine under these conditions could result in burns or injuries.**

Engine oil

<TB285>

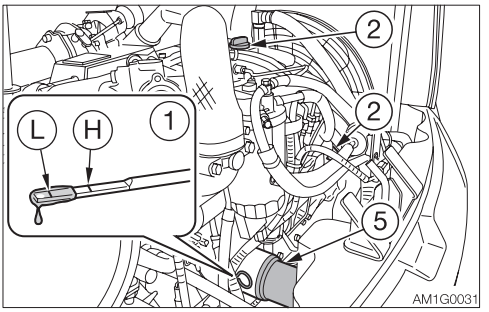

<TB290>

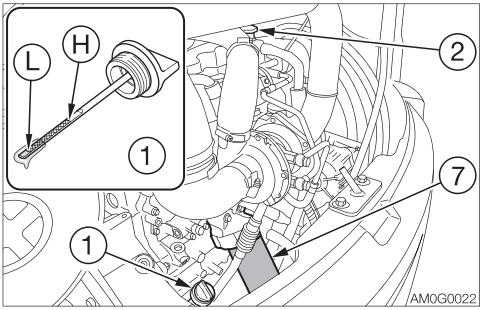

1. Open the engine hood and remove the oil filler cap (2).
   For TB290, the oil fill hole of the dipstick (1) can be removed for replenishing.

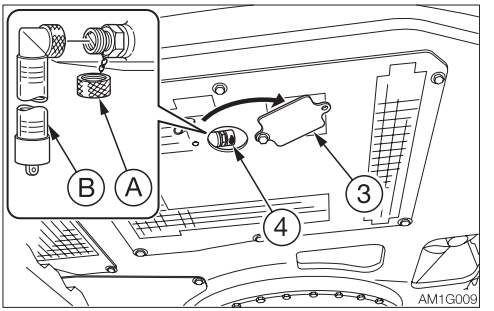

2. Loosen the bolts and remove the under cover (3).
3. Place a pan for catching the waste oil under the drain plug (4).
4. Remove the cap (A), install connector (B) and drain the oil. (The oil comes out when the screw is tightened.)
5. Remove the connector (B) and install the cap (A).

IMPORTANT: Check the waste oil for metal powder. If it contains large amounts of metal powder, consult your sales or service dealer.

Engine oil filter
<TB285>

6. Turn the filter (5) counterclockwise with the filter wrench and remove it.
7. Clean the surface of installation of the filter stand.
8. Apply a thin layer of oil on the packing of the new filter.
9. Install the new filter by hand.
10. Tighten one more turn (with the filter wrench) after the filter packing comes in contact with the surface of installation. (Torque when tightening with filter wrench: 19.6 to 23.5 N·m or 14 to 17 ft-lb.)
11. Add oil up to between the upper limit (H) and the lower limit (L) of the dipstick (1). Problems could arise if the oil level is either too low or too high. It takes around 10 to 20 minutes for all of the added oil to go down to the oil pan.
12. Tighten the oil filler cap (2).
13. Start the engine, run it at low idle for about 5 minutes, then stop it.
14. After about 10 minutes, inspect the oil level.

<TB290>

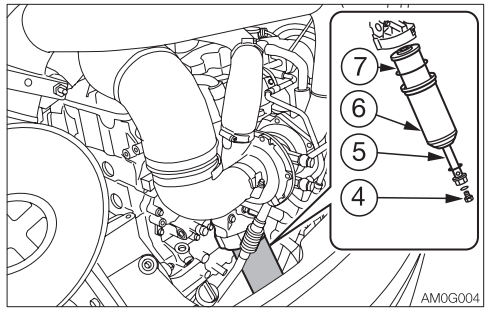

6. Place a pan for catching the waste oil under the engine oil filter.
7. Remove the drain plug (4) and drain the oil from the filter case (6).
8. Loosen the bolt (5) and remove the filter case (6).
9. Clean the inside of the filter case (6) and install a new element (7).
10. Clean the surface to install the filter stand and coat the new O-rings with thin oil.
11. Install the case (6) and secure it with the bolt (5).
    · Tightening torque: 44.1 N·m (32.5 ft-lb.)
12. Install the drain plug (4).
    · Tightening torque: 24.5 N·m (18.1 ft-lb.)
13. Add oil up to between the upper limit (H) and the lower limit (L) of the dipstick (1). Problems could arise if the oil level is either too low or too high. It takes around 15 minutes for all of the added oil to go down to the oil pan.
14. Tighten the oil filler cap (2).
15. Start the engine, run it at low idle for about 5 minutes, and then stop it.
16. After about 10 to 20 minutes, inspect the oil level.

CLEANING THE AIR CLEANER

⚠ WARNING

- **Stop the engine and allow the machine to cool down before performing maintenance.**
  - **The engine, muffler, radiator and many other parts of the machine are hot immediately after the engine is stopped. Touching it will cause burns.**
- **Wear required appropriate equipment such as protective goggle and filter mask when using compressed air, as metal fragments or other objects can fly and cause serious injury.**

IMPORTANT: Be careful not to scratch the element. Do not use an element if it is damaged.
IMPORTANT: When operating the machine in very dusty places, perform inspection and maintenance operations every day.
IMPORTANT: Be sure to install the element and dust cap securely. If not, dust could be drawn into the cylinder, damaging the engine.

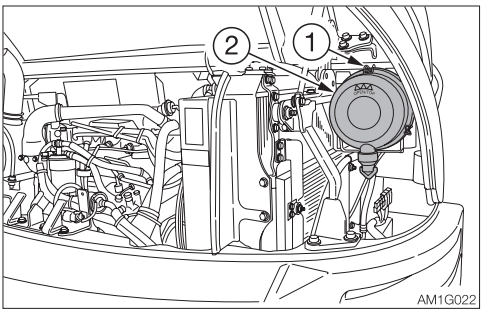

1. Open the engine hood.

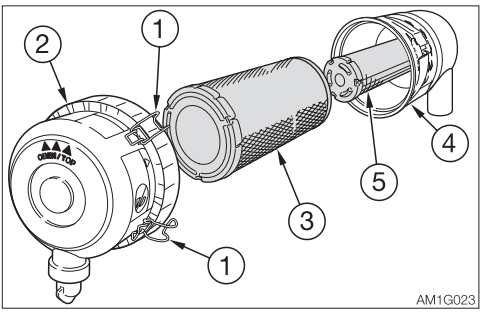

2. Loosen the clamps (1) and remove the dust cup (2).
3. Clean the inside of the dust cup (2).
4. Remove the primary element (3).
   To prevent dirt from getting inside the engine, do not remove the secondary element (5).
5. Clean the inside of the body (4).

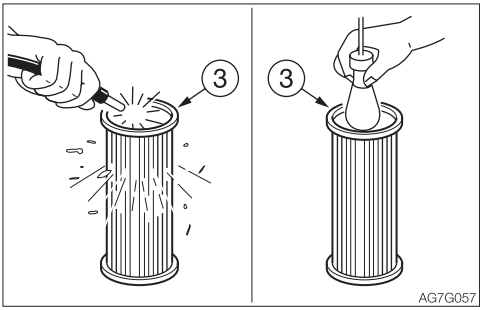

6. Clean the primary element (3) with dried compressed air (294 to 490 kPa or 43 to 71 psi).
   First blow the air from the inside of the element along the pleats. Then blow the air from the outside and finally from the inside again.
7. Light up the inside of the primary element (3) with a light bulb, inspect it, and replace it if there are small holes or thin spots.
8. Install the primary element (3).
9. Install the dust cup (2) with its "▲▲▲ OBEN/TOP" mark facing up, and then fasten it with the clamps (1).

CLEANING THE RADIATOR FINS AND THE OIL COOLER FINS

⚠ WARNING

Wear required appropriate equipment such as protective goggle and filter mask when using compressed air, as metal fragments or other objects can fly and cause serious injury.

IMPORTANT: Be careful not to damage the fins when cleaning.

- **When using compressed air or pressurized water, make sure the pressure is no higher than 200 kPa (28 psi) and hold the nozzle sufficiently away from the fins.**

IMPORTANT: When using water, cover the electrical system to prevent water from getting in.

IMPORTANT: When operating the machine in very dusty places, perform inspection and maintenance operations every day.

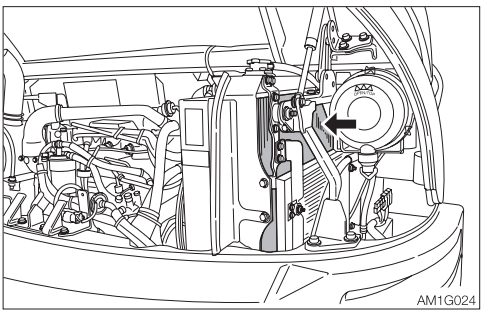

1. Open the engine hood.

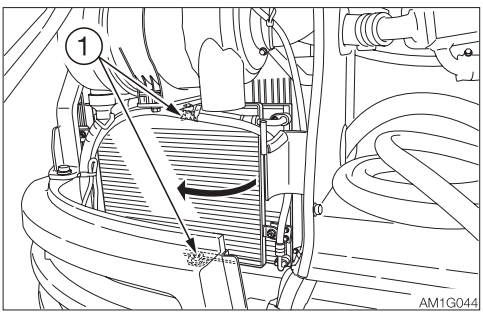

2. Remove the screws (1) and open the condenser.
3. Blow compressed air on the fins to remove mud and dirt stuck on them.

CLEANING THE AIR FILTERS (AIR CONDITIONER)

⚠ WARNING

Wear required appropriate equipment such as protective goggle and filter mask when using compressed air, as metal fragments or other objects can fly and cause serious injury.

Clean the filters immediately after operating in dusty places.
If the filters are clogged, the air flow is reduced and a booming sound is heard from the air conditioner unit.

Removing the filters

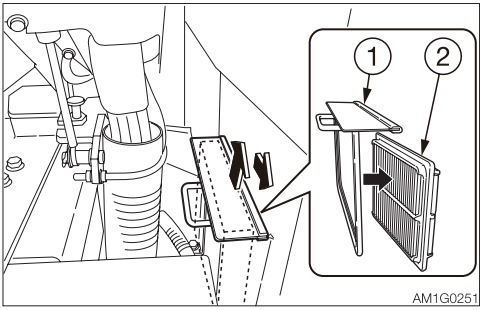

1. Open the cab door.
2. Pull out the filter case (1) upward and remove the ventilation filter (2) from the filter case (1).
   Ventilation filter (2): parts No. 19115-13680

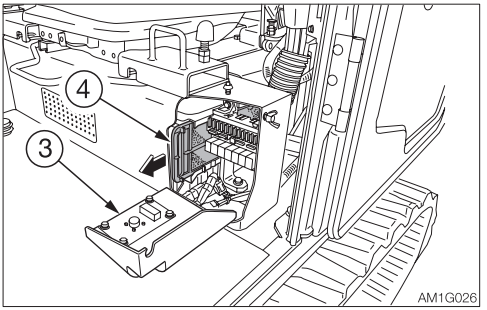

3. Open the cover (3).
4. Remove the circulation filter (4).
   Circulation filter (4): Part No. 19115-13811
5. Use compressed air or water to clean the filters, depending on how dirty they are.

Cleaning

1. Blow dry, compressed air (138 kPa or 20 psi or less) directly on the filters from the inside, moving up and down along the pleats.
   Be sure to keep the nozzle at an adequate distance from the filters.
2. Wash the filter with neutral detergent if it is very dirty. Dry the filter completely after washing it.

Replacing

Replace the filter with a new one once a year or if it is still clogged after blow-drying with compressed air and washing.

CLEANING THE CONDENSER (AC)

⚠ WARNING

Wear required appropriate equipment such as protective goggle and filter mask when using compressed air, as metal fragments or other objects can fly and cause serious injury.

IMPORTANT: Be careful not to damage the fins when cleaning.

- **When using compressed air or pressurized water, make sure the pressure is no higher than 200kPa (28 psi) and hold the nozzle sufficiently away from the fins.**

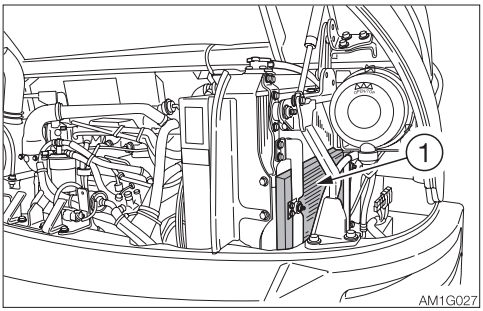

1. Open the engine hood.
2. Clean the condenser (1).

INSPECTING THE REFRIGERANT (GAS) LEVEL (AC)

⚠ WARNING

- **Exposure of the eyes or hands to the cooler's refrigerant could result in blindness or frostbite. Never touch the refrigerant or loosen the parts of the cooling circuit.**
- **Keep flames away if the refrigerant gas is leaking.**
- **The high-pressure pipes of the air conditioner can be very hot (80 to 120°C or 176 to 248°F). Be careful not to burn yourself.**

The cooling capacity decreases if the amount of refrigerant is insufficient. Inspect the refrigerant level using the sight glass (2) on the top of the receiver dryer (1).

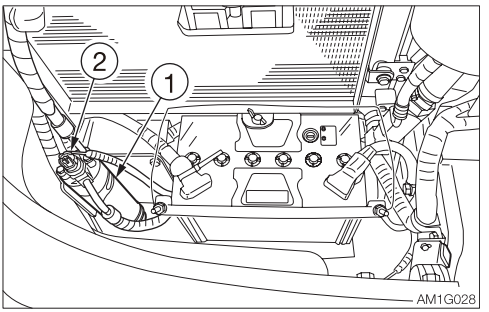

1. Open the engine hood.
2. Inspect the places for the conditions below.

Places for inspection	Conditions
Cab door	Fully open
Temperature control dial	Set fully to the COOL side
Fan speed	High
Ventilation / Circulation select switch	Circulation
Engine speed	Maximum speed
Air conditioner switch	ON

3. Inspect the refrigerant by watching the flow of air bubbles through the sight glass (2).
   Refer to "Check list for refrigerant volume" on page 5-45.

<TB285>

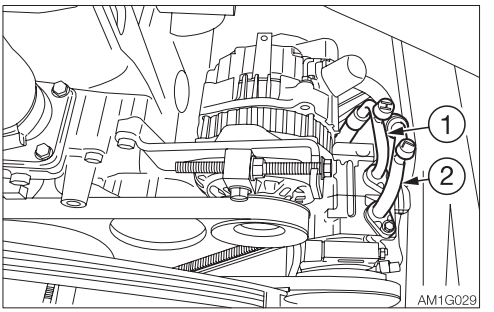

<TB290>

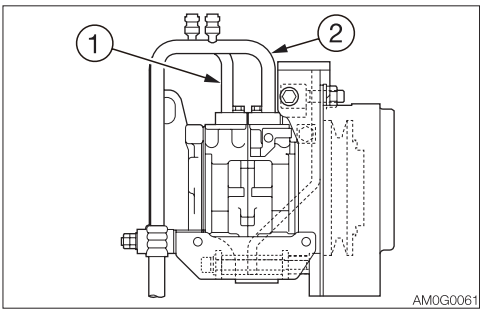

4. Check the temperature of the compressor's high pressure pipe (1) and low pressure pipe (2).
   Refer to "Check list for refrigerant volume" on page 5-45.

Check list for refrigerant volume

Air conditioner	Normal	Abnormal		
High/low pressure pipe temperature	High pressure pipe is hot (80 to 120°C or 176 to 248°F), low pressure pipe is cold (8 to 15°C or 46 to 59°F). Clear difference in temperature between the pipes.	High pressure pipe is warm, low pressure pipe is slightly cool. No significant difference in temperature between the pipes.	Little difference in temperature between the high-pressure pipe and the low-pressure pipe.	High pressure pipe is hot, low pressure pipe is slightly cool. A significant difference in temperature between the pipes.
Pipe connection	Normal	Some places are dirty with oil.	Some places are extremely dirty with oil.	Normal
Sight glass	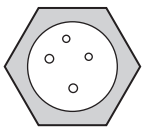 AG7G064 Almost transparent with some bubbles. Fully transparent when the engine speed is increased or decreased.	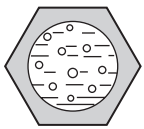 AG7G065 Flow of bubbles can be seen constantly. Sometimes transparent or white with bubbles.	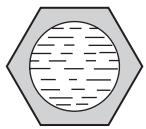 AG7G066 Mist-like flow is faintly visible.	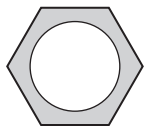 AG7G067 No bubbles is visible, even when the fan is set to High and the engine is idling.
Refrigerant level	Proper level	Refrigerant may be leaking.	Refrigerant has leaked; little is left.	Refrigerant level too high

If the air conditioner is not working
If the air conditioner does not work well, set the fan switch to OFF and contact your sales or service dealer for inspection and/or repairs.

IMPORTANT: Continued use of the air conditioner when it is not working properly will damage its various parts.
IMPORTANT: Using the air conditioner when there is no refrigerant will damage the compressor.
IMPORTANT: Always consult your sales or service dealer for replacing the refrigerant. Be sure to use R134a refrigerant (740 to 820 g or 1.63 to 1.81 lb.).

EVERY 500 HOURS

REPLACING THE FUEL FILTER

⚠ WARNING

- **Do not smoke or permit open flames while handling fuel or working on the fuel system.**
- **Stop the engine in a well-ventilated place and allow it to cool down before performing maintenance.**
- **Clean up spilled fuel immediately.**

<TB285>

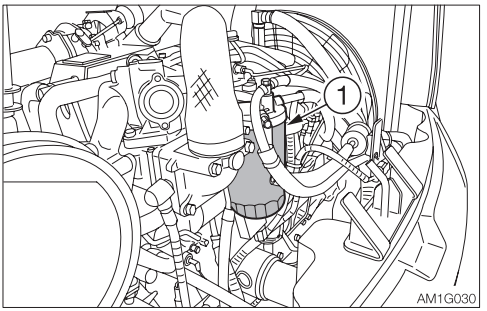

1. Open the engine hood.
2. Turn the filter (1) counterclockwise with the filter wrench and remove it.
3. Clean the surface of installation of the filter stand.
4. Apply a thin layer of oil on the packing of the new filter.
5. Install the new filter by hand.
6. Tighten one more turn after the filter packing comes in contact with the surface of installation. (Torque when tightening with filter wrench: 19.6 to 23.5 N·m or 14 to 17ft-lb.)
7. Bleed the air.
   Refer to “Bleeding air from the fuel system” on page 6-8.

<TB290>

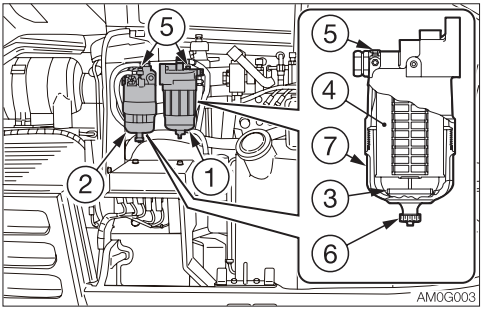

1. Open the side cover.

Pre-fuel filter

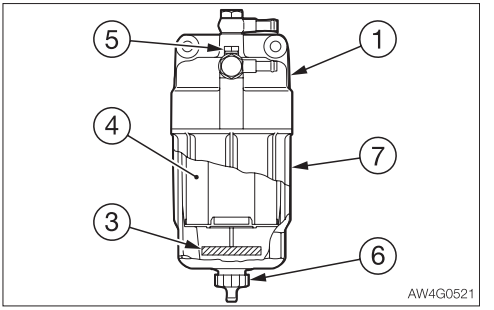

2. Place a pan under the pre-fuel filter (1) to catch fuel.
3. Loosen the vent plug (5) and the drain plug (6) to drain the fuel inside.
4. Remove the case (7) by using a filter wrench.
5. Replace the seals with new ones and lubricate the new seals with diesel fuel.
6. Put the new element (length of 150 mm / 5.9 in.) (4) in the case (7) and install by hand until the seal makes contact with the sealing surface.
7. Tighten the case (7) with the filter wrench. Tightening torque: 30 N·m (22.1 ft-lb.)

Main fuel filter

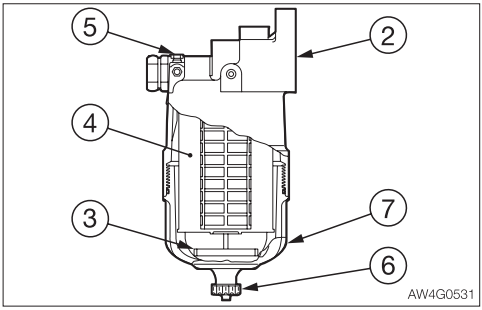

8. Place a pan under the main fuel filter (2) to catch fuel.
9. Loosen the vent plug (5) and the drain plug (6) to drain the fuel inside.
10. Remove the case (7) by using a filter wrench.
11. Replace the seals with new ones and lubricate the new seals with diesel fuel.
12. Put the new element (length of 131 mm / 5.2 in.) (4) in the case (7) and install by hand until the seal makes contact with the sealing surface.
13. Tighten the case (7) with the filter wrench.
    Tightening torque: 29.4 N·m (21.7 ft-lb.)
14. Bleed air.
    Refer to “Bleeding air from the fuel system” on page 6-8.

REPLACING THE WATER SEPARATOR FILTER (IF EQUIPPED WITH FILTER FOR HIGH SULFUR FUEL) <TB285>

⚠ WARNING

- **Do not smoke or permit open flames while handling fuel or working on the fuel system.**
- **Stop the engine in a well-ventilated place and allow it to cool down before performing maintenance.**
- **Clean up spilled fuel immediately.**

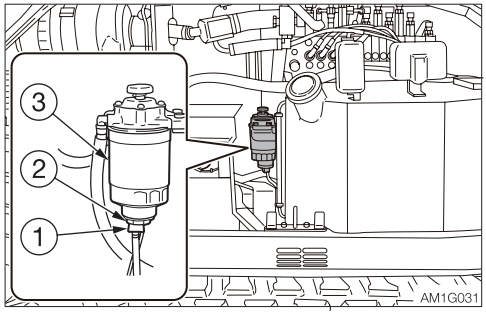

1. Open the side cover.
2. Place a pan for catching the waste oil under the drain hose.
3. Open the drain valve (1) and drain the fuel.
4. Remove the sensor (2).
5. Remove the filter (3).
6. Install the sensor (2) on the new filter.
7. Clean the surface to install the filter stand.
8. Apply a thin layer of oil on the packing of the new filter.
9. Install the new filter by hand.
10. Tighten 2/3 more turn after the filter packing comes in contact with the surface of installation.
    · Tightening torque: 44.1 N·m (32.5 ft-lb.)
11. Bleed air.
    Refer to “Bleeding air from the fuel system” on page 6-8.

<TB285>
If equipped with filter for high sulfur fuel

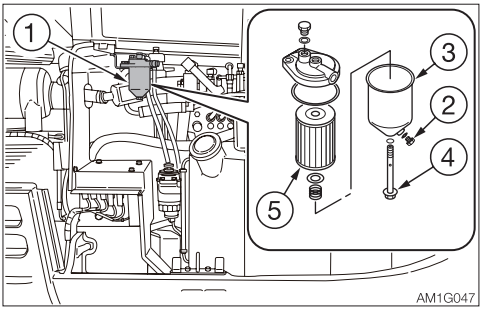

1. Open the engine hood.
2. Place a pan under the filter (1).
3. Remove the plug (2) and drain the fuel from the filter case (3).
4. loosen the bolt (4) right under the filter (1) and remove the filter case (3).
5. Replace the element (5) in the filter case (3) with a new one.
6. Install the filter case (3) and tighten the bolt (4).
7. Tighten the plug (2) and bleed air.
   Refer to “Bleeding air from the fuel system” on page 6-8.

CLEANING THE FEED PUMP FILTER <TB290>

⚠ WARNING

- **Do not smoke or permit open flames while handling fuel or working on the fuel system.**
- **Stop the engine in a well-ventilated place and allow it to cool down before performing maintenance.**
- **Clean up spilled fuel immediately.**

1. Open the side cover.

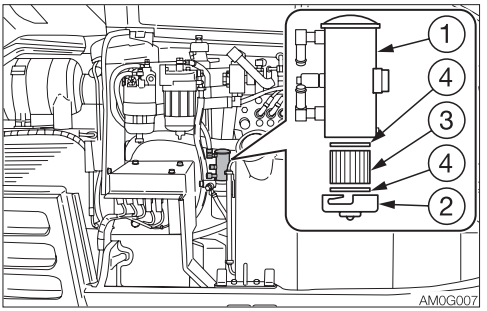

2. Place a pan under the feed pump (1) to catch fuel.
3. Remove the wiring from the cover (2).
4. Remove the cover (2) by turning it with a wrench.
5. Remove the filter (3) and the gasket (4).
   · Pinch the outer portion of the gasket, pull it out and remove it.
   · Do not disassemble the piston portion at the inner center of the pump.
6. Clean the filter and use compressed air of 294 to 490 kPa (43 to 71 psi) to blow off any dust.
7. Install the filter and the new gasket.
8. Securely install the cover (2) by using a wrench.
9. Bleed air.
   Refer to “Bleeding air from the fuel system” on page 6-8.

INSPECTING AND CLEANING THE SUPPLY PUMP STRAINER <TB290>

⚠ WARNING

- **Do not smoke or permit open flames while handling fuel or working on the fuel system.**
- **Stop the engine in a well-ventilated place and allow it to cool down before performing maintenance.**
- **Clean up spilled fuel immediately.**
- **Before performing maintenance on top of the work bench, clean the footing and observe the following precautions to prevent falling.**
  - **· Do not spill oil or grease.**
  - **· Do not leave tools scattered around.**
  - **· Watch your step when walking.**
- **Never jump down from the machine or the work bench. When getting on or off the machine or work bench, use the steps, handrails or work bench to support your body. Your weight should be evenly distributed among the three contact points (one hand and two feet or two hands and one foot).**
- **Do not stand on the dozer blade and perform maintenance work. Doing so is dangerous because of the unsteady foothold. Use the work bench.**

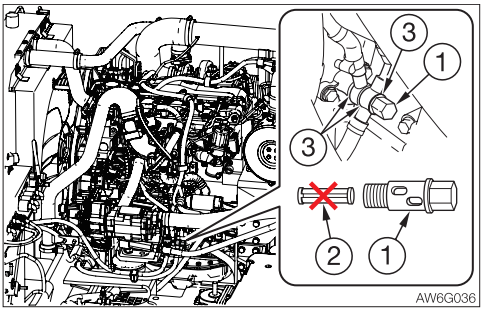

1. Open the engine hood.
2. Place a pan under the joint bolt (1) to catch fuel.
3. Loosen the joint bolt (1) and remove it.
4. Check the strainer (2) inside the joint bolt (1), and clean it if it is dirty.
   When cleaning, do not remove the strainer (2) from the joint bolt. (Disassembly prohibited)
   If the dirt is persistent or the joint bolt is clogged, replace the joint bolt with the strainer in it.
5. Arrange the joint bolt (1), hose and the new packing (3) together, and then install them on their original positions.
   · Joint bolt (1) tightening torque: 14.6 to 24.6 N·m (11 to 18 ft-lb)
6. Bleed air.
   Refer to “Bleeding air from the fuel system” on page 6-8.

Note: Replace the supply pump strainer (integrated with the joint bolt), if the “lowered output” or “engine stopping” cannot be corrected after replacing the fuel filter element. When replacing the strainer, replace the packing on both sides of the hose with the new one at the same time.

INSPECTING THE SLEW PINION GEAR

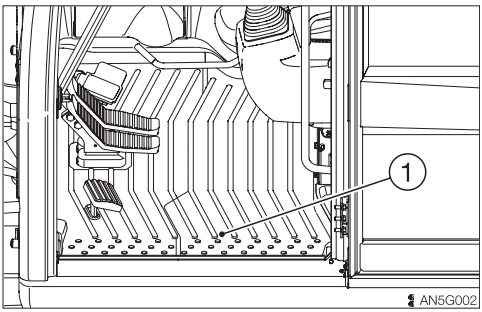

1. Remove the floor mat (1).

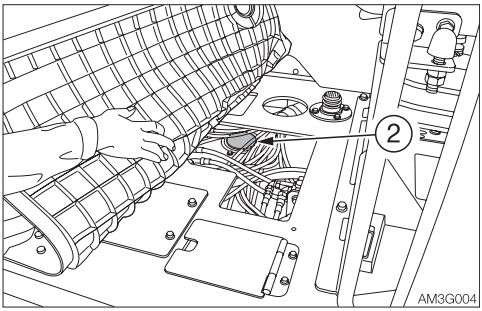

2. Remove the cap (2).
3. Make sure that the gear tooth surface of the slew bearing is well greased.
   If the surface is not adequately greased, add grease.
   If the grease has turned white due to water or mud entered it, replace the whole grease. Consult your sales or service dealer for help.
   Grease full capacity: 10 L (2.6 US gal) or 9.0 kg (20 lbs.)
4. Install the cap (2).
5. Install the floor mat (1).

EVERY 1000 HOURS

REPLACING THE HYDRAULIC OIL RETURN FILTER

Refer to “Replacing the hydraulic oil return filter” on page 5-34.

REPLACING THE PILOT LINE FILTER

Refer to “Replacing the pilot line filter” on page 5-35.

REPLACING THE TRAVEL MOTOR GEAR OIL

Refer to “Replacing the travel motor gear oil” on page 5-36.

CLEANING THE ENGINE COOLING SYSTEM <TB290>

⚠ WARNING

- **Stop the engine and allow the machine to cool down before performing maintenance.**
  - **The engine, muffler, radiator and many other parts of the machine are hot immediately after the engine is stopped. Touching these parts will cause burns.**
  - **The engine coolant is also hot and under high pressure immediately after the engine is stopped. Be careful when loosening the caps or plugs. Working on the machine under these conditions could result in burns or injuries due to the hot coolant spurting out.**
- **If maintenance must be performed with the engine running, always work as a two person team communicating each other.**
  - **One person must sit in the operator’s seat so that he/she can immediately stop the engine when necessary. He/she must take care not to touch the lever or pedal unless necessary.**
  - **The one who performs maintenance must make sure to keep his/her body or clothing away from the moving part of the machine.**
- **Standing at the back of the machine while the engine is running is extremely dangerous, as the machine could move suddenly. Never stand at the back of the machine while the engine is running.**
- **Do not remove the radiator cap or the drain plug when the cooling water is hot. Stop the engine and wait until the engine and the cooling water cool. Then, slowly loosen the radiator cap and the drain plug to remove them.**

When cleaning, if the temperature of the coolant is low, the thermostat will be closed and the coolant will not circulate in the radiator. Heat the coolant water to at least 90°C (194°F) before cleaning.

1. Open the engine hood and the side cover.

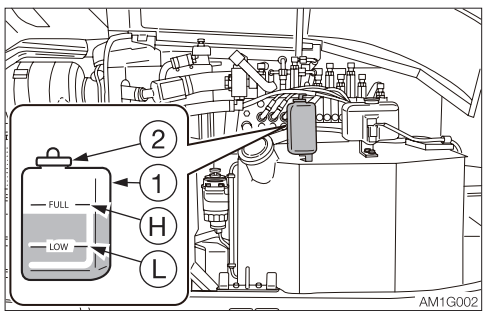

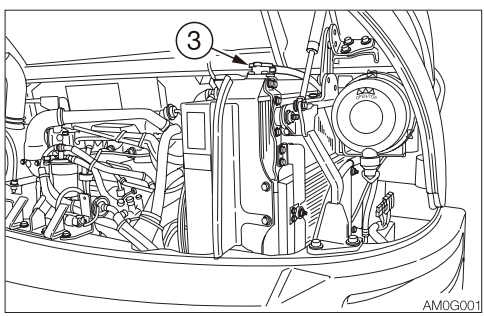

2. Gradually loosen the radiator cap (3) to release the internal pressure, and then remove the cap.

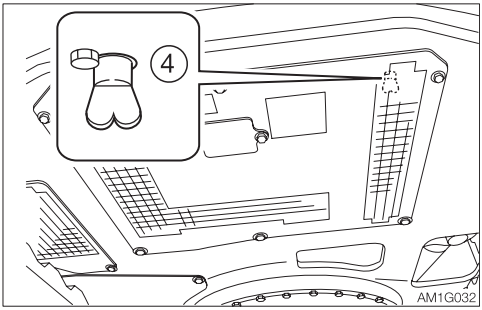

3. Place a pan for catching the waste coolant under the drain plug (4), and then loosen the drain plug (4) to drain the coolant.
4. Tighten the drain plug (4).
5. Add tap water to the radiator through the coolant fill port up to the top of the port. Take time and slowly add water, so that no air enters the radiator.
6. Close the radiator cap (3).
7. Start the engine and run it at a speed slightly above low idling. Raise the water temperature to at least 90°C (194°F), and then run the engine for about 10 minutes with the thermostat open.
8. Stop the engine, wait until the cooling water temperature becomes lower, and then remove the drain plug (4) to drain the water.
9. After draining, clean the cooling system using a cleaning agent. When using the cleaning agent, follow the instructions included with the agent.
10. Repeat the steps 4 to 8 to rinse the cooling system.
11. Tighten the drain plug (4).
12. Take time and slowly add the new coolant (mixture of antifreeze and tap water) to the radiator through the fill port until it is full.
13. Close the radiator cap (3).
14. Warm up the engine. Use the meters to check that there are no irregularities in the cooling system at this time.
15. Increase the water temperature to at least 90°C (194°F). Then, run the engine for about 10 minutes with the thermostat kept open.
16. Stop the engine, wait until the cooling water temperature becomes lower, and then check the level of coolant in the radiator.
    If necessary, add cooling water until the radiator is full.
17. Close the radiator cap (3).
18. Clean the interior of the reserve tank (1), and then add coolant to the upper limit (H).
19. When the coolant has been replaced, inspect the coolant level once again after operating the machine.
    When the machine is operated, the coolant is distributed throughout the entire system, resulting in the lower coolant level.
    Add coolant up to the full level.

REPLACING THE AIR CLEANER ELEMENT

⚠ WARNING

Stop the engine and allow the machine to cool down before performing maintenance.

- **The engine, muffler, radiator and many other parts of the machine are hot immediately after the engine is stopped. Touching these parts will cause burns.**

IMPORTANT: Do not use an element if its pleats, gaskets or seals are damaged.
IMPORTANT: Be sure to install the element and dust cap securely. If not, dust could be drain into the cylinder, damaging the engine.

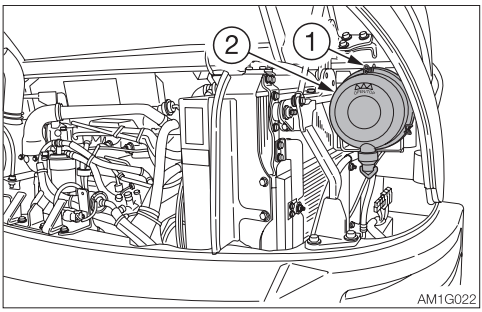

1. Open the engine hood.

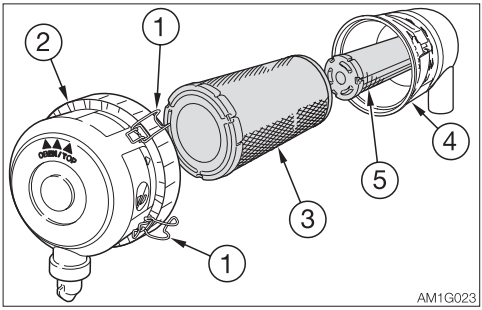

2. Loosen the clamps (1) and remove the dust cup (2).
3. Clean the inside of the dust cup (2).
4. Remove the primary element (3).
   Do not remove the secondary element yet.
5. Clean the inside of the body (4).
6. Remove the secondary element (5).
7. Install the new elements. Press them firmly into the body (4).
8. Install the dust cup (2) with its "▲▲▲ OBEN/TOP" mark facing up, and then fasten it with the clamps (1).

REPLACING THE AIR BREATHER FILTER

⚠ WARNING

Oil may spurt out if caps or filters are removed or pipes are disconnected before releasing the pressure in the hydraulic system.

- **Press the air breather button to relieve the tank pressure.**

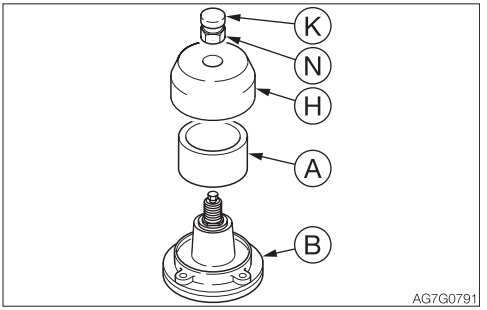

1. Open the side cover.
2. Press the button (K) to relieve the internal pressure from the tank.
3. Remove the nut (N) on the air breather.
4. Remove the cover (H).
5. Replace the filter (A).
6. Install the cover (H) on the body (B).
7. Install the nut (N).

INSPECTING AND ADJUSTING THE ENGINE VALVE CLEARANCE

This operation requires experience. Ask your sales or service dealer for it.

INSPECTING THE ENGINE COMPRESSION PRESSURE <TB290>

This operation requires experience. Ask your sales or service dealer for it.

INSPECTING AND CLEANING THE ENGINE STARTER AND THE ALTERNATOR <TB290>

This operation requires experience. Ask your sales or service dealer for it.

EVERY 1500 HOURS

INSPECTING, CLEANING AND CHECKING OPERATION OF THE ENGINE FUEL INJECTORS <TB285>

This operation requires experience. Ask your sales or service dealer for it.

INSPECTING THE CRANKCASE BREATHER SYSTEM <TB285>

This operation requires experience. Ask your sales or service dealer for it.

CLEANING THE EGR COOLER (CLEANING THE WATER SIDE AND EXHAUST AIR PASSAGE BLOWER)

This operation requires experience. Ask your sales or service dealer for it.

INSPECTING THE TURBOCHARGER (BLOW WASH AS NECESSARY) <TB290>

This operation requires experience. Ask your sales or service dealer for it.

INSPECTING AND CLEANING THE EGR VALVE <TB290>

This operation requires experience. Ask your sales or service dealer for it.

CLEANING THE EGR LEAD VALVE <TB290>

This operation requires experience. Ask your sales or service dealer for it.

EVERY 2000 HOURS

CLEANING THE ENGINE COOLING SYSTEM <TB285>

Replace the coolant after the two-year operation even if the running time is less than 2000 hours.
Refer to “Cleaning the engine cooling system <TB290>” on page 5-51.

LAPPING THE ENGINE VALVE SEATS (IF NECESSARY) <TB285>

This operation requires experience. Ask your sales or service dealer for it.

EVERY 3000 HOURS

INSPECTING THE TURBOCHARGER (BLOW WASH AS NECESSARY) <TB285>

This operation requires experience. Ask your sales or service dealer for it.

INSPECTING, CLEANING AND CHECKING OPERATION OF THE EGR VALVE <TB285>

This operation requires experience. Ask your sales or service dealer for it.

CLEANING THE EGR LEAD VALVE <TB285>

This operation requires experience. Ask your sales or service dealer for it.

EVERY 4000 HOURS

REPLACING THE HYDRAULIC OIL AND CLEANING THE SUCTION STRAINER

⚠ WARNING

- **Stop the engine and allow the machine to cool down before performing maintenance.**
  - **The engine and the hydraulic system and many other parts of the machine are hot immediately after the engine is stopped. Touching these parts will cause burns.**
  - **The hydraulic oil is also hot and under high pressure immediately after the engine is stopped. Be careful when loosening the caps or plugs. Working on the machine under these conditions could result in burns or injuries due to the hot oil spurting out.**
- **Oil may spurt out if caps or filters are removed or pipes are disconnected before releasing the pressure in the hydraulic system.**
  - **Press the air breather button to relieve the internal pressure from the tank.**
  - **When removing plugs or screws, or when disconnecting hoses, stand to the side and loosen them slowly to gradually release the internal pressure before removing.**

1. Slew 45° clockwise and set the machine to the hydraulic oil level inspection posture.
   Refer to “Inspecting the hydraulic oil tank level and replenishing” on page 5-22.
2. Open the side cover.

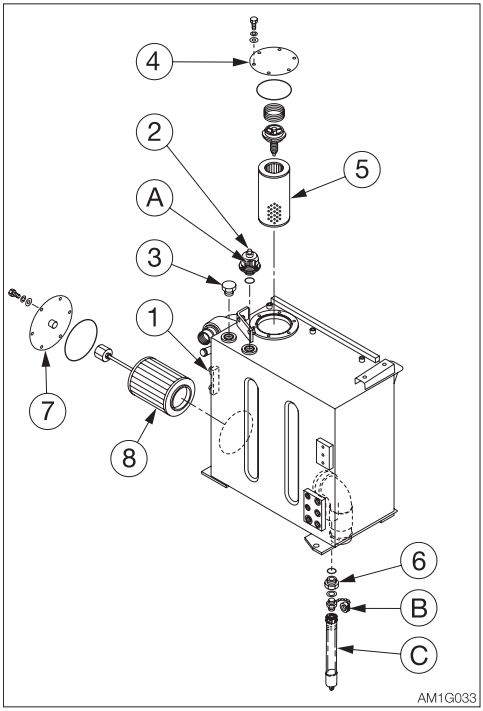

3. Press the button (2) to relieve the internal pressure from the tank.
4. Replace the air breather filter (A).
   Refer to “Replacing the air breather filter” on page 5-53.
5. Remove the plug (3).
6. Place a pan under the plug (6) to catch the waste oil.
7. Remove the cap (B), install connector (C) and drain the oil. (The oil comes out when the screw is tightened.)
8. Loosen the bolts and remove the flange (4).
9. Remove the return filter (5).

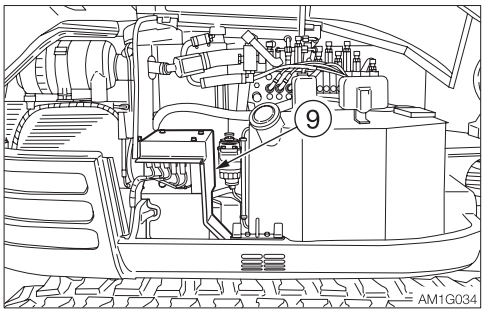

10. Remove the relay and fuse panel (9).
11. Loosen the bolts and remove the flange (7).
12. Remove the suction strainer (8) and clean it.
13. Clean the inside of the hydraulic tank.
14. Remove the connector (C) and install the cap (B).
15. Install the suction strainer (8) on the tank and then install the flange (7).
16. Install the new return filter (5) and the flange (4) on the tank.
17. Add hydraulic oil from the hole of plug (3) up to the level between the upper limit (H) and the lower limit (L) in the sight gauge (1).
18. Tighten the plug (3).
19. Install the relay and fuse panel (9).
20. Bleed air from the hydraulic oil circuit following “Bleeding air” below.
21. Set the machine to the hydraulic oil level inspection posture and inspect the oil level after the oil cools.
    Refer to “Inspecting the hydraulic oil tank level and replenishing” on page 5-22.

Bleeding air
IMPORTANT: After replacing the hydraulic oil or hydraulic devices, or after performing maintenance of the hydraulic devices, bleed air from the hydraulic circuits and hydraulic devices. Failure to do so may damage the hydraulic devices.

• Hydraulic pump

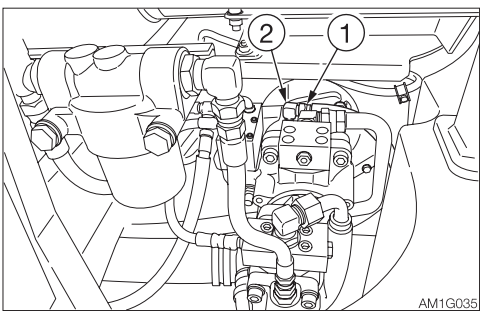

1. Open the engine hood.
2. Loosen the drain hose (1) of the hydraulic pump.
3. Tighten the drain hose (1) once there are no more air bubbles coming from the elbow (2) joint.

• Slew motor

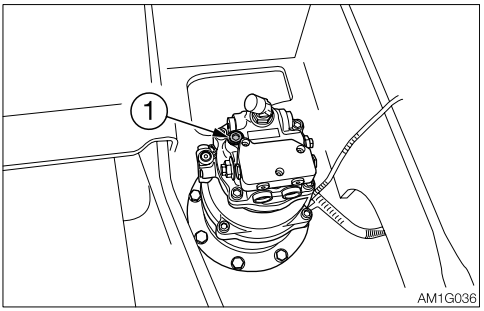

1. Loosen the air-bleeding plug (1).
2. Tighten the plug (1) once the hydraulic oil overflows from the air-bleeding plug hole (1).

• Cylinders
1. Start the engine, let it run at a low-idling speed for 10 minutes.
2. Maintain the engine at low idle, and then slowly extend and retract each cylinder 4 or 5 times, without letting them reach the stroke end.
3. While running the engine at high speed, slowly extend and retract each cylinder 4 or 5 times, without letting them reach the stroke end.
4. Return the engine speed to low idle, and then slowly extend and retract each cylinder 4 or 5 times to the stroke end.

• Emergency shut-off valve

This operation is dangerous and requires experience. Ask your sales or service dealer for help.

If air is not released, the working equipment could become slow in reacting to the operation of the operator and show unexpected behavior.

⚠ WARNING

When removing plugs or screws, or when disconnecting hoses, stand to the side and loosen them slowly to gradually release the internal pressure before removing.

1. Place a pan under the hose (A) or (B) to catch the waste oil.
2. Start the engine and run it at low idle.
3. Fully lower the safety lock lever to the unlock position.

Boom

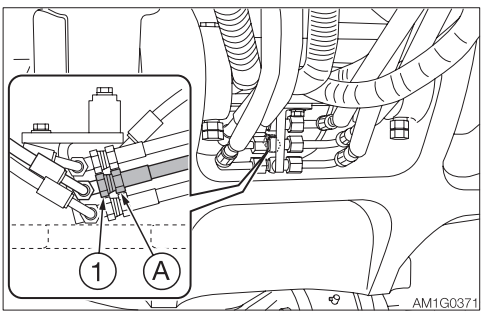

2-Piece boom

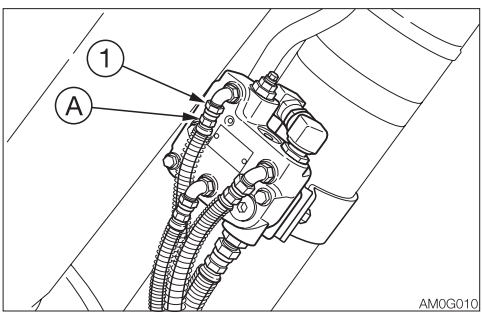

4. Hold the hose fitting (A) in place with a wrench and slowly loosen the hose nut (1).
5. Slowly move the boom in the “Boom lower” direction a little until there are no more air bubbles coming from the hose nut (1) joint.
6. Hold the hose fitting (A) in place with a wrench and tighten the hose nut (1).

Second boom

<Type A>

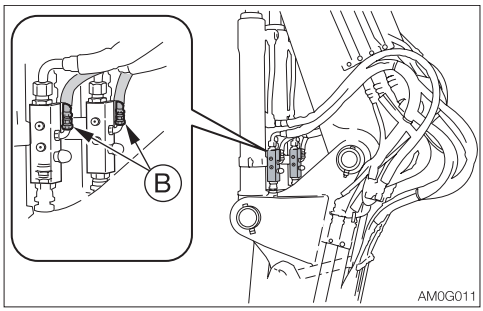

<Type B>

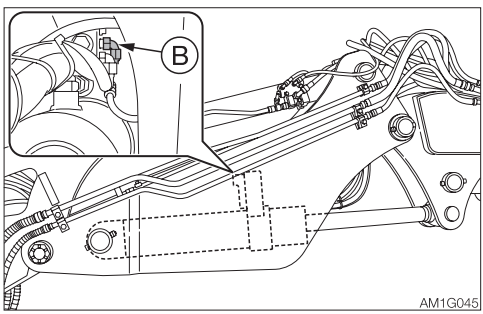

Arm
<Type A>

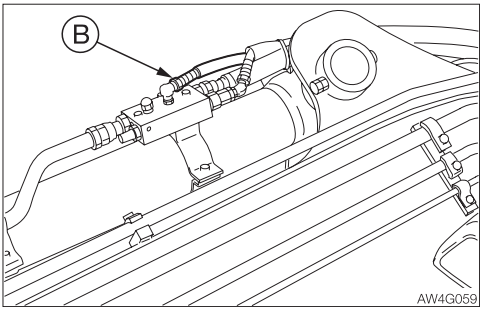

<Type B>

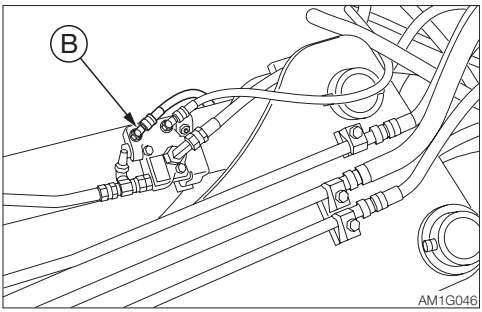

4. Loosen the hose (B) slowly.
5. Slowly move the arm in the “Arm in” direction a little until there are no more air bubbles coming from the hose (B) joint.
6. Tighten the hose (B).

WHEN REQUIRED

REPLACING THE BUCKET TEETH AND THE SIDE CUTTERS

Replace the bucket teeth if the tooth points are worn. Do not wait until the bucket is damaged.

⚠ WARNING

- **Before performing maintenance or repairs under the machine, lower all moveable working equipment to the ground or in the lowermost position.**
- **To prevent unexpected movement, firmly secure the working equipment when repairing or replacing the bucket teeth or side cutter.**
- **When using a hammer, pins may fly out or metal particles may be scattered. This may lead to serious injury.**
  - **If hard metal parts such as pins, bucket teeth, side cutter or bearings are hit with a hammer, wear protective gear such as safety goggles and gloves.**
  - **When hitting pins or bucket teeth, always check that there is no one in the surrounding area.**
- **Do not allow unauthorized personnel in the work area while working.**

Removing

1. Clean the bucket and park the machine on a flat and rigid ground.

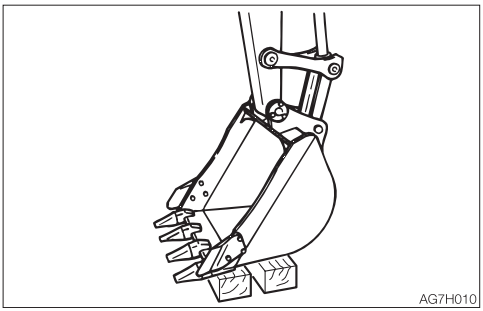

2. Place the bucket with its bottom flat on the blocks so that the locking pin can be knocked out.
3. Remove the key, and then check that the bucket is stable.

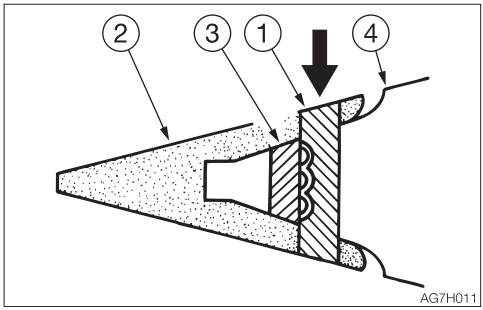

4. Knock out the locking pin (1) and remove the point (2).

Note: If the drift is set against rubber pin lock (3) when it is hit, the rubber pin lock may break. Set it against the back of the locking pin.

5. Remove the rubber pin lock (3). Check if the rubber pin lock is still usable. Replace it if it is as follows.

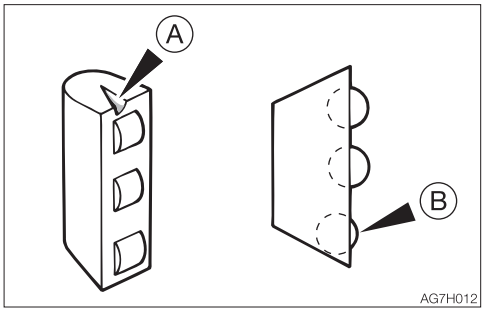

A .....There are cracks in the rubber and the roller is coming off.
B .....The roller is dented when pressed with a finger.

Installation

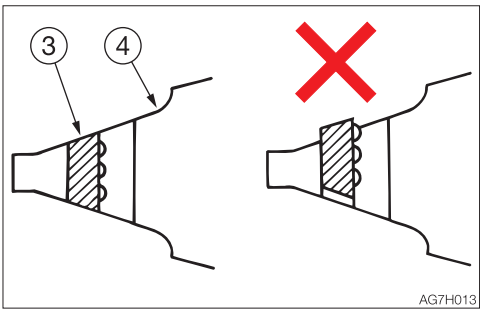

1. Remove the dirt on the surface of adaptor and the inner part of tooth, make the better contact on the mating part.
2. Push rubber pin lock (3) into the welding adaptor (4).
   Do not let the rubber pin lock stick out from the welding adaptor surface.

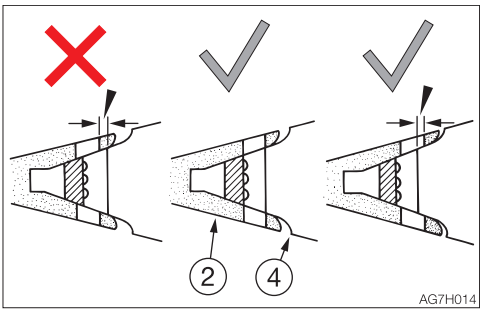

3. Install the point (2) onto the welding adaptor (4).
   Insert the point so that the surface behind the point's pin hole is aligned with the surface behind the welding adapter's pin hole.

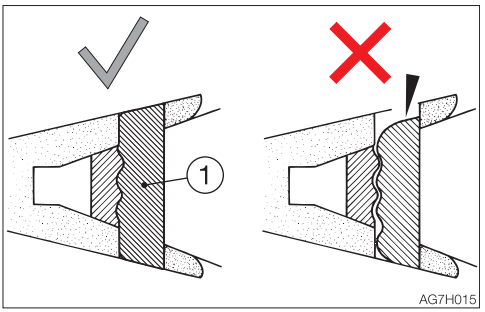

4. Knock out the locking pin (1).
   Check that the end surfaces of the locking pin just knocked out are aligned with the upper and lower surface of the point. Do not use the worn locking pin.
   The life of the teeth can be lengthened and the frequency of its replacement can be reduced by turning it upside down so that it will wear evenly.
   Replace the rubber pin lock and locking pin at the same time as replacing the teeth. This makes it possible to prevent the teeth from falling out

- **Side cutter**

Installation

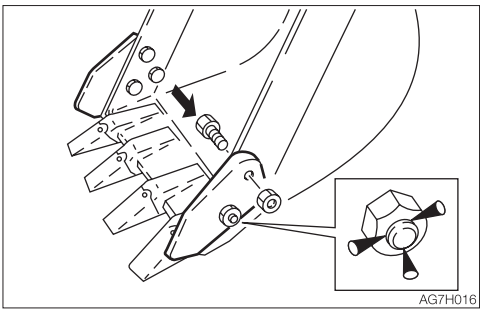

1. Insert the bolts from the inner of the bucket and tighten the side cutter with nuts.
   Tightening torque: 475 N·m (350 ft-lb.)
2. Caulk the bolts with a punch at three spots along the periphery of the screw to prevent the nuts from coming loose.

REPLACING THE BUCKET

⚠ WARNING

- **Before performing maintenance or repairs under the machine, lower all working equipment to the ground or in the lowermost position.**
- **If maintenance must be performed with the engine running, always work as a two person team communicating each other.**
  - **One person must sit in the operator's seat so that he/she can immediately stop the engine when necessary. He/she must take care not to touch the lever or pedal unless necessary.**
  - **The one who performs maintenance must make sure to keep his/her body or clothing away from the moving part of the machine.**
- **When using a hammer, pins may fly out or metal particles may be scattered. This may lead to serious injury.**
  - **If hard metal parts such as pins, bucket teeth, side cutter or bearings are hit with a hammer, wear protective gear such as safety goggles and gloves.**
  - **When hitting pins or bucket teeth, always check that there is no one in the surrounding area.**
- **When aligning the pin holes, always do so by checking them visually. Do not insert your finger in the pin hole, or you could lose your finger.**

Removing

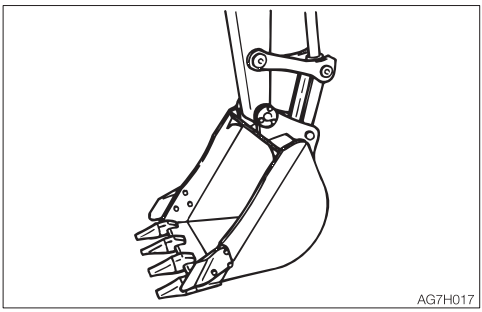

1. Lower the bucket to the ground as shown on the figure above in a stable position.

Note: When removing pins, set the bucket so that it is barely touching the ground. If the bucket is firmly touching the ground, the resistance will be great and it will be difficult to remove the pin.

2. Set the safety lock lever to the locked position and stop the engine.

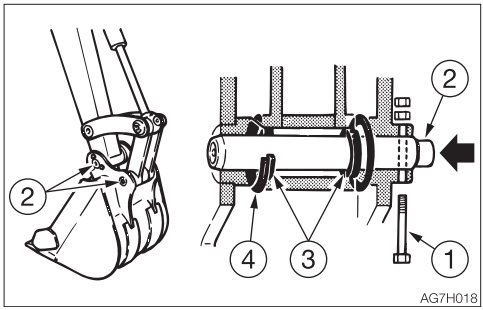

3. Remove the bolt (1).
4. Hammer the pin (2) out of the bucket.
5. Remove the bucket.
   Inspect the pin seal (3) and replace it if it is deformed or damaged. (See next page.)

Installation

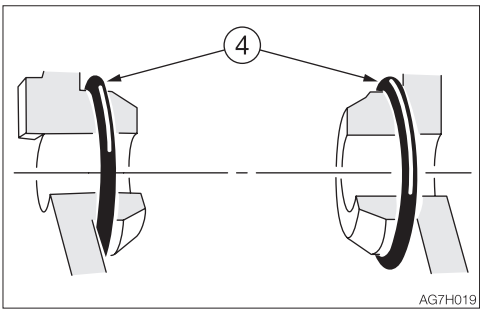

1. Set the O-ring (4) on the bucket as shown on the figure above.

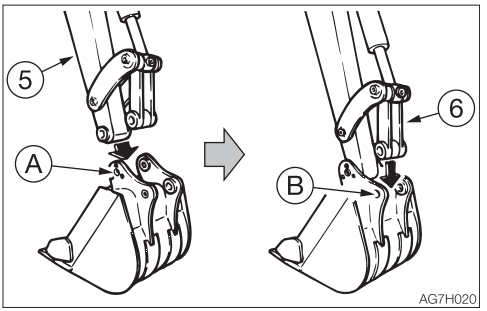

2. Align the pin hole (A) on the bucket with the pin hole on the arm (5), and install the pin (2).
3. Operate the cylinder, align the pin hole (B) on the bucket with the pin hole on the link arm (6), and install the pin (2).

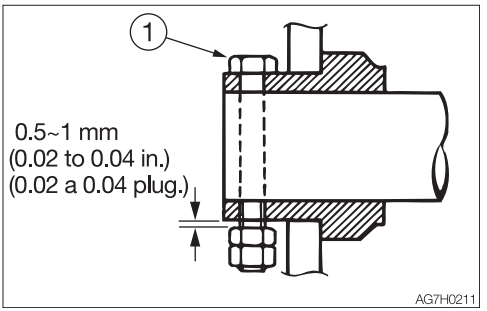

4. Align the turn prevention holes, and then install the bolt (1) and the nut. Be sure to leave a gap of about 0.5 to 1 mm (0.02 to 0.04 in.) between the nut and bucket bush, or the nut will come loose.

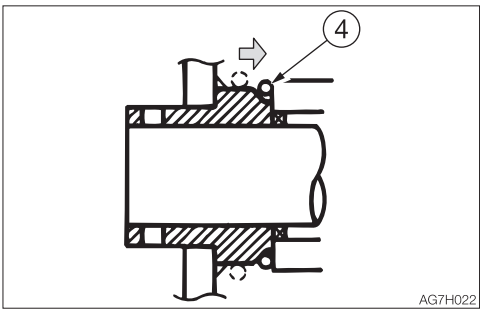

5. Adjust the gap between the bucket and the arm.
   Refer to “Adjusting the gap between the bucket and arm (If equipped)” on page 5-64.
6. Slide the O-ring (4).

Replacing the pin seal

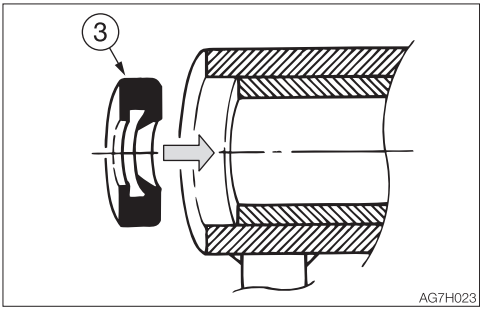

1. Set the pin seal (3) in the direction shown on the figure above.
2. Use a mallet to slowly press the pin seal in. Be careful not to damage the seal.

ADJUSTING THE GAP BETWEEN THE BUCKET AND ARM (IF EQUIPPED)

⚠ WARNING

- **Before performing maintenance or repairs under the machine, lower all working equipment to the ground or in the lowermost position.**
- **To prevent unexpected movement, securely block the working equipment when adjusting the gap.**

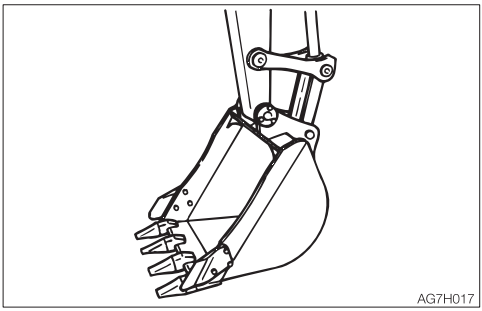

1. Lower the bucket to the ground as shown on the figure above in a stable position.
2. Check that the bucket dose not move, and then set the safety lock lever to the locked position and stop the engine.

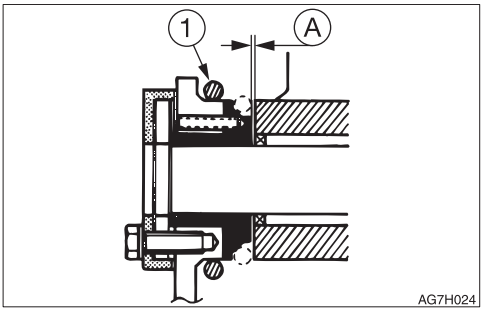

3. Move the O-ring (1) to bring the gap (A) into view and measure the width of the gap (A).
   The gap (A) should be 0.5 mm (0.02 in.). Swing the upperstructure slightly to the left and lightly press the arm point to the left side of the bucket (the side without an adjuster).

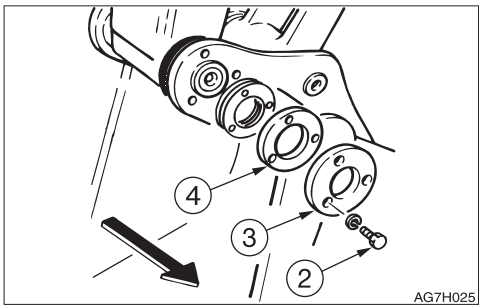

4. Remove the three bolts (2), the end plate (3) and flange (4).

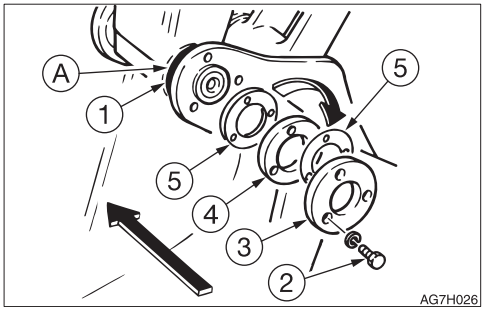

5. Pull out the adjustment shim(s) (5) corresponding to the gap (A) from between the flange (4) and the bucket body.
   Adjustment shim thickness : 0.5 mm (0.02 in.)
   Be careful that the gap is no less than 0.5 mm (0.02 in.) after adjustment.

Note:
Example (for a gap of 2 mm or 0.08 in.):
2 mm - 0.5 mm (standard value)= 1.5 mm (0.06 in.)
In the above example, three shims (5) should be removed.

6. Insert the adjustment shim(s) (5) removed in step 5 above between the end plate (3) and the flange (4), and then fasten it in place with the three bolts (2).
   · Tightening torque for bolts (2): 83 N·m (61.5 ft-lb.)
7. Return the O-ring (1) to the original position.

INSPECTING AND REPLENISHING THE WINDSHIELD WASHER FLUID

⚠ WARNING

Choose ethyl alcohol as washer solution. Do not use methyl alcohol as washer solution. It could damage the eyes.

Use a windshield washer fluid designed specifically for motor vehicles. Follow the instructions included with the washer fluid.

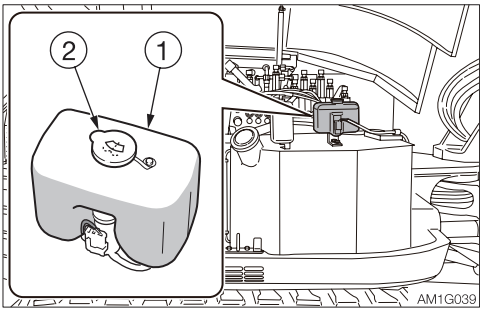

Inspection

1. Open the side cover.
2. Inspect the washer tank (1) and add washer fluid if the level is low.

Replenishing

1. Mix the washer fluid to the prescribed concentration.
2. Remove the cap (2) and add washer fluid. Keep the dust away while replenishing the washer fluid.
3. Install the cap (2).

DRAINING THE WATER FROM THE WATER SEPARATOR

⚠ WARNING

- **Do not smoke or permit open flames while handling fuel or working on the fuel system.**
- **Stop the engine in a well-ventilated place and allow it to cool down before performing maintenance.**
- **Clean up spilled fuel immediately.**

<TB285>

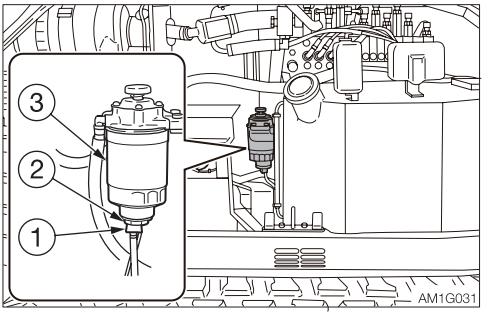

<TB290>

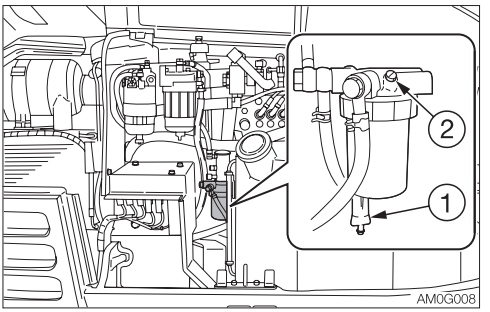

1. Open the side cover.
2. Place a pan under the drain valve (1) to catch fuel.
3. Open the drain valve (1) and drain the water.
   If the water does not drain easily, loosen the plug (2). <TB290>
4. Close the drain valve (1) and tighten the plug (2) <TB290>.

Refer to “Bleeding air from the fuel system” on page 6-8.

LUBRICATING THE LEVERS AND PEDALS

⚠ WARNING

Set the machine to the parking posture, stop the engine, remove the starter key and store it. Failure to do so may result in the machine moving abruptly, leading to serious injury or death.

If the levers or pedals no longer move smoothly, grease them.

Operating levers

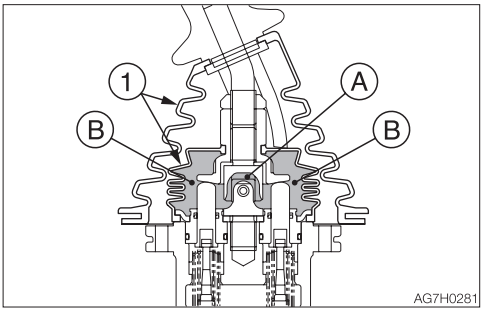

Travel levers/pedals

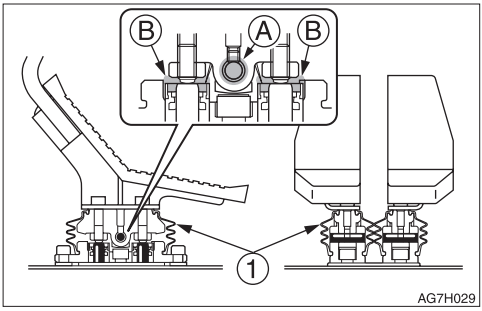

Boom swing pedal

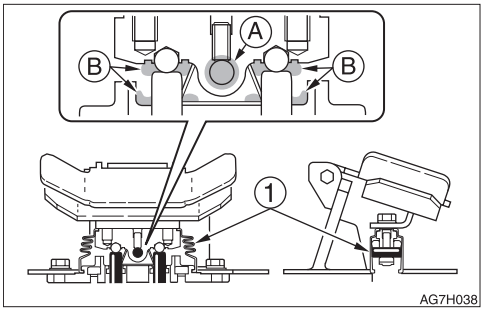

Dozer blade lever

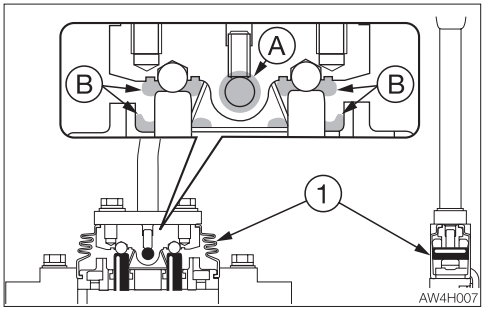

1. Remove the lower mount section of the boot (1) and turn it upward.
2. Wipe off the old grease.
3. Apply grease to points (A) and (B).
4. Set the boot (1) back as it was.

INSPECTING THE RUBBER CRAWLERS

Repair or replace the rubber crawlers if their condition becomes as described below. Consult your sales or service dealer for repair or replacement.

Rubber crawler
Replace the crawler if the entire crawler is stretched and cannot be adjusted.
(1) Lug

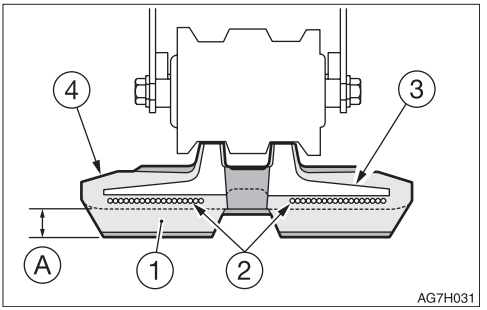

Replace if the height of (A) is 5 mm (0.2 in.) or below.

(2) Steel cord

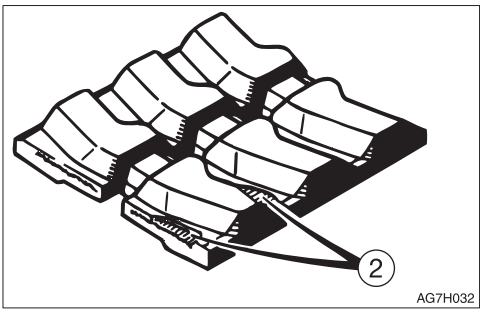

Replace if the steel cord is exposed for two links or more.
Replace if the half or more of the steel cords on one side are cut.

(3) Metal core

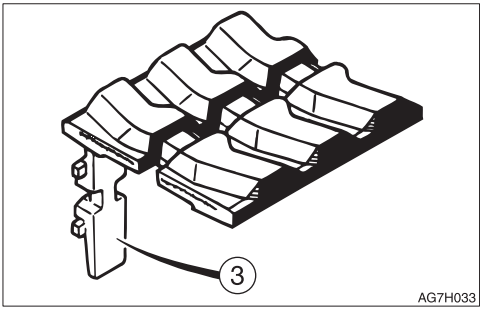

Replace if even one metal core is off.

(4) Rubber

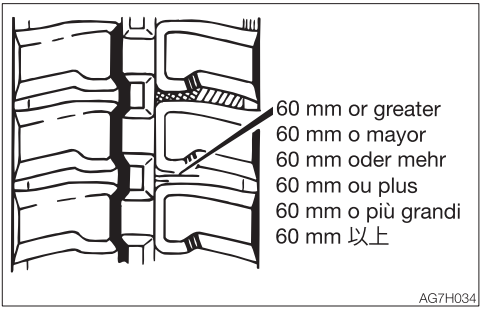

Repair if there are cracks of 60 mm (2.4 in.) or greater in length.
If the steel cord is visible, repair as soon as possible, regardless of the length of the crack.

REPLACING THE RUBBER CRAWLERS

⚠ WARNING

- **If you must work beneath the raised machine or working equipment, always use wood blocks, jack-stands or other rigid and stable supports. Never get under the machine or working equipment if they are not sufficiently supported.**
- **If maintenance must be performed with the engine running, always work as a two person team communicating each other.**
  - **One person must sit in the operator's seat so that he/she can immediately stop the engine when necessary. He/she must take care not to touch the lever or pedal unless necessary.**
  - **The one who performs maintenance must make sure to keep his/her body or clothing away from the moving part of the machine.**

IMPORTANT: When replacing the crawler belts, replace the right and left belts at the same time.
IMPORTANT: When the travel speed button is set to the 2nd speed side while the engine is running, the tensioning cylinder rods extend and the crawler belt tension is increased. Keep the engine at the 1st speed when replacing. Do not set to the 2nd unless for increasing tension.
Note: This machine uses a hydraulic cylinder to adjust the tension of the crawler belts. It is not necessary to regularly perform adjustments of the crawler belt tension.

Removal

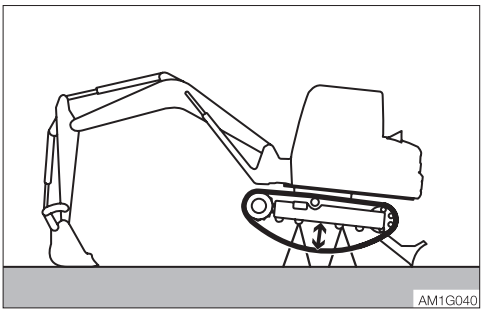

1. Start the engine and raise the machine body with the hoe attachment and the dozer blade.
2. Stop the engine.

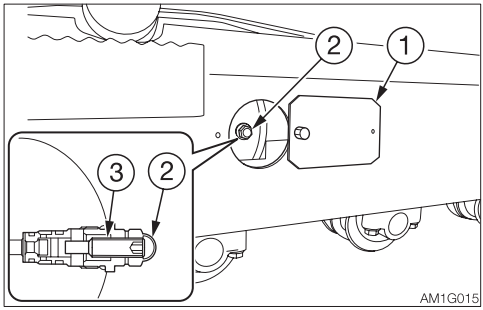

3. Remove the valve cover (1) at the center of one of the crawler frames.
4. Turn the plug (2) counterclockwise and remove it.
5. Turn the stem (3) counterclockwise with a hex wrench to completely loosen the tension of the crawler.
6. Once the crawler belt is completely loose, tighten the stem (3) until it is firm.
   · Tightening torque: 18.6 to 21.6 N·m (13.7 to 15.9 ft-lb.)
7. Tighten the plug (2).
   · Tightening torque: 18.6 to 21.6 N·m (13.7 to 15.9 ft-lb.)
8. Do the same for the other side.

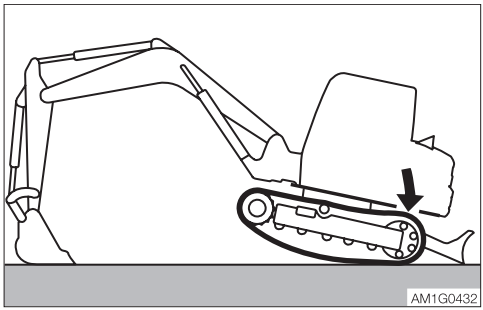

9. Slowly lower the dozer blade side of the machine body. (Do not start the engine.)
10. Lower the machine body until the crawlers contact the ground with the maximum slack.
11. When the crawlers are disengaged from the idlers, slide the crawlers to the

outside and remove them.
12. Remove the crawlers from the sprockets, and then remove the crawlers from the crawler frames.

Installation
1. Engage the crawlers around the left and right sprockets.
2. Set the left and right crawlers on the idlers.
3. Start the engine.
4. Press the travel speed button once to set it to the 2nd speed side. The left and right crawler belts are tightened simultaneously.

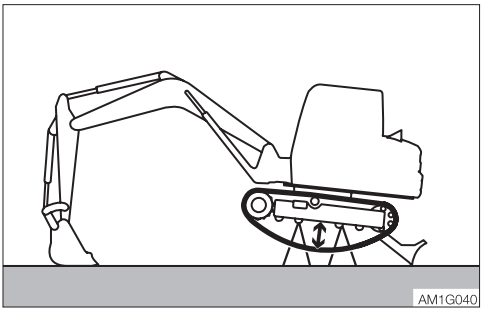

5. Check that the crawler belts are properly tightened.

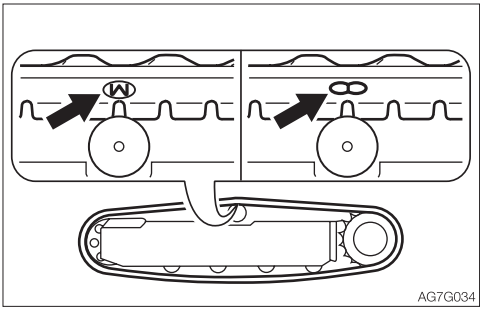

6. For rubber crawlers, move the machine so that the “M” or “∞” mark at the joint is at the top center of the crawler frame.

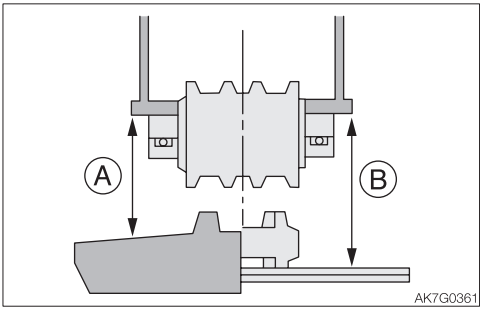

7. Inspect the gap (A or B) between the bottom surface of the frame at the center of the crawler frame and the top surface of the crawler.
   The gap (A or B) must be within the following range:
   (A)..... Rubber crawler
   160 to 180 mm (6.3 to 7.1 in.)
   (B)..... Steel crawler
   Applicable machine models
   185000001 to 185000810
   190000001 to 190000872
   260 to 280 mm (10.2 to 11.0 in.)
   Applicable machine models
   185000811 or later
   190000873 or later
   270 to 290 mm (10.6 to 11.4 in.)
   (B)..... Segmental rubber crawler
   257 to 277 mm (10.1 to 10.9 in.)

Note: When the self-adjusting shoe tension system is properly working, the shoe should have the gap (A or B) as described above, at the time of installation.
When the machine is lowered and driven in 2nd speed, the crawler belts will be stretched to the correct tension. The values of shoe tension (gap values) after the 2nd speed travel are different from those described above.

EVERY 2 YEARS

REPLACING THE RECEIVER DRYER

This operation requires experience. Ask your sales or service dealer for it.

MAINTENANCE DURING EXTENDED STORAGE PERIOD

Storage procedures

If the machine is to be stored for 30 days or more, store it indoors. If it must be stored outdoors, park the machine on a surface laid with lumber on a flat ground, and place a waterproof cover over it so that it stays dry.

1. Clean the machine.
2. Inspect for oil leakage, water leakage, cracks and loose nuts and bolts.
3. Add fuel and replace the hydraulic oil and oil.
4. To prevent rusting and freezing, replace the engine coolant with long-life coolant (LLC).
   Refer to "Cleaning the engine cooling system <TB290>" on page 5-51.
5. Use the grease gun to lubricate the grease fittings.
6. Fully retract the bucket and arm cylinders and lower the bucket and dozer blade to the ground.
7. Apply rust-inhibiting oil to the hydraulic cylinder rods.
8. Disconnect the negative cable from the battery and cover the battery to prevent freezing.

During storage

⚠ WARNING

- **Do not operate the machine in an enclosed area without adequate ventilation.**
- **If natural ventilation is not possible, install ventilators, fans, exhaust extension pipes or other venting devices.**

1. To prevent rusting, operate the machine once a month so that the oil can be circulated throughout the system.
2. Inspect the battery and recharge it as necessary.
   Ask your sales or service dealer for recharging.

Starting the machine after storage

IMPORTANT: If the above "Storage procedures" have not been followed during the extended storage periods, consult your sales or service dealer before starting the machine again.

1. Wipe off the rust-inhibiting oil that was applied on the piston rods of the hydraulic oil cylinders.
2. Add oil or grease as necessary.

Returning the engine to service

1. Perform the daily checks.
2. The engine should be pre-oiled before startup.
   a. Crank the engine, leaving the fuel system shut off so the engine will not start, for 15 seconds.
   b. Then pause for 30 seconds.
   c. Repeat the procedure until you have cranked the engine for a total of one minute. This will circulate the oil in the engine's lubrication system.
3. Prime the fuel system.
4. Start the engine. Allow the engine to idle for approximately 15 minutes while you check for:
   - Proper oil pressure
   - Fuel, engine oil or coolant leaks
   - Proper operation of the indicators and/or gauges
5. Avoid prolonged operation at minimum or maximum engine speeds and loads for the remainder of the first hour of operation.

TROUBLESHOOTING



SYMPTOMS THAT ARE NOT MALFUNCTIONS

The symptoms listed below are not malfunctions.

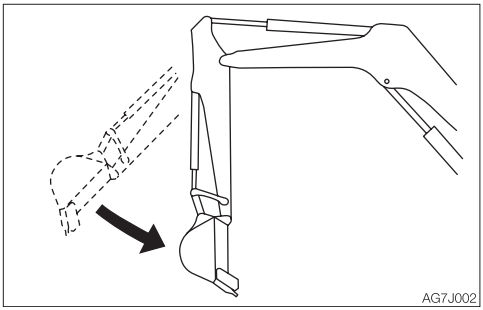

- The arm retracting speed momentarily slows down when it reaches an almost vertical position while the engine is running at low speed.

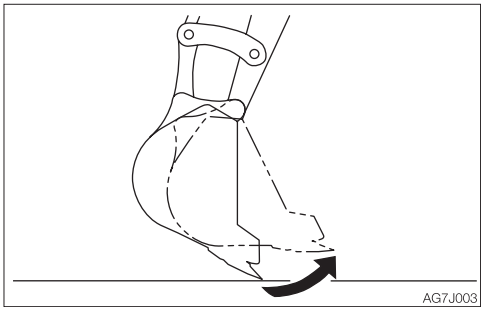

- The bucket teeth moving speed momentarily slows down when it reaches an almost horizontal position while the engine is running at low speed.
- The slew motor produces noise at the beginning and end of the slewing.
- The travel motor produces noise when stopped suddenly from its high speed traveling.
- The control valve produces noise if excessive force is applied to the working equipment or when it moved to the stroke end.
- It becomes less easy to operate the machine when an attachment weighing more than a standard arm or bucket is installed.

IF THE ENGINE OVERHEATS

⚠ WARNING

- **Do not open the engine hood when steam is coming from it. The steam or hot water may spurt out and cause burns.**
- **Do not try to remove the radiator cap or the drain plug when the cooling water is hot. Stop the engine, wait until the engine and the radiator cool, and then slowly loosen the radiator cap to release the internal pressure.**
- **Before performing maintenance, stop the engine and allow the machine to cool down.**

The symptoms listed below indicate overheating.

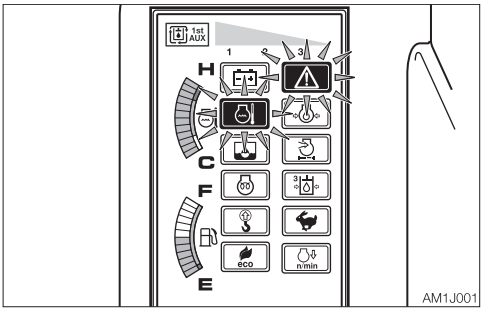

- An alarm is sounded and the engine emergency lamp and the coolant temperature warning lamp start flashing.
- The water temperature gauge LED is in the red zone.
- Steam comes from the engine room.

Remedy procedure

1. Park the machine in a safe place.
2. Check if steam is coming out of the closed engine hood.
3. If there is steam, stop the engine immediately and contact your sales or service dealer for repair. If steam, is not coming out run the engine at low idle and let the water temperature cool down.
4. When the water temperature gauge LED drops in the green zone, stop the engine.
5. Perform the inspections and the remedies listed below once the engine cools down.
   - Fan belt slack..... Adjust
     Refer to page 5-24.
   - Coolant level ..... Add
     Refer to page 5-18.
   - Water leakage..... Repair
   - Radiator fins..... Clean
     Refer to page 5-41.
   - Sediment in cooling system
     ..... Clean
     Refer to page 5-51.

If the problem persists after the above remedies, contact your sales or service dealer for repair.

IF THE BATTERY GOES DEAD

The symptoms below indicate that the battery is dead.
- The starter motor does not turn or fails to start the engine.
- The horn is too weak.

Remedy procedure

Start the engine using the booster battery on the other vehicle (booster vehicle) and the jumper cables.

⚠ WARNING

- **When starting the engine using the jumper cables, be sure to connect the cables by following the proper steps. Improper use of jumper cables can result in battery explosion or unexpected machine motion.**
  - **Do not allow the booster vehicle and the machine with a dead battery (dead machine) to touch each other.**
  - **Do not allow the positive (+) and the negative (–) clips of the jumper cables to touch each other.**
  - **When connecting, attach the jumper cable to the positive (+) terminals first. When disconnecting, remove the cable from the negative (–) terminal (ground) first.**
  - **Connect the last clip of the jumper cable to a point as far away from the battery as possible.**
- **Always wear the protective goggle when jump starting the engine by using the jumper cables.**

IMPORTANT: Use the jumper cables and clips of a size suited to the capacity of battery. Do not use damaged or corroded jumper cables and clips.
IMPORTANT: Be sure that the battery of the booster vehicle has the same capacity as the battery of the dead machine.
IMPORTANT: Be sure to connect the clips securely.

Connecting the jumper cables

IMPORTANT: Set the starter keys of the booster vehicle and the dead machine to the OFF position.

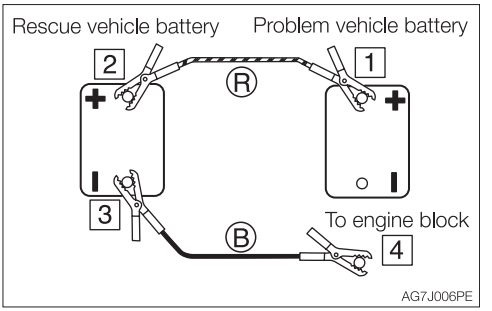

1. Connect the clip of jumper cable (R) to the positive (+) battery terminal of the dead machine.
2. Connect the other clip of jumper cable (R) to the positive (+) battery terminal of the booster vehicle.
3. Connect the clip of jumper cable (B) to the negative (–) battery terminal of the booster vehicle.
4. Connect the other clip of jumper cable (B) to the engine block of the dead machine. Connect the clip to a place as far from the battery as possible.

Starting the engine

1. Check that the clips are securely connected to the terminals.
2. Start the engine of the booster vehicle and run it at high speed.
3. Start the engine of the dead machine.

Disconnecting the jumper cables

Once the dead machine is successfully running, remove the jumper cables by following the same steps as for connection in the reverse order.

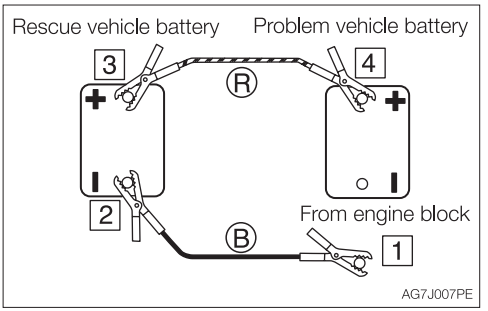

1. Disconnect the clip of jumper cable (B) from the engine block of the dead machine.
2. Disconnect the other clip of jumper cable (B) from the negative (–) battery terminal of the booster vehicle.
3. Disconnect the clip of jumper cable (R) from the positive (+) battery terminal of the booster vehicle.
4. Disconnect the clip of jumper cable (R) from the positive (+) battery terminal of the dead machine.

Recharging

Ask your sales or service dealer for recharging the dead battery.

IF A FUSE BLOWS

If a light does not come on or the electrical system does not work, a fuse may be blown. Inspect the fuses.

INSPECTING AND REPLACING THE FUSE

⚠ WARNING

If the fuse blows again soon after replacement, then the electric system is likely faulty. It may pose a fire hazard if not properly repaired. Contact your sales or service dealer for advice.

1. Turn the starter key to the OFF position to stop the engine.

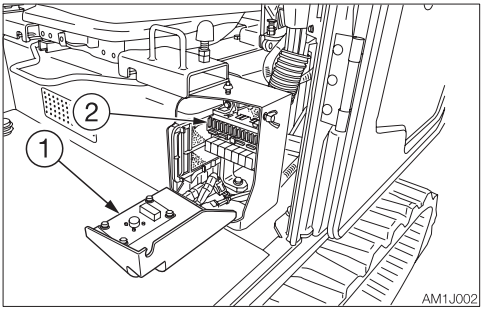

2. Open the fuse box cover (1).
3. Check for any blown fuses (2).

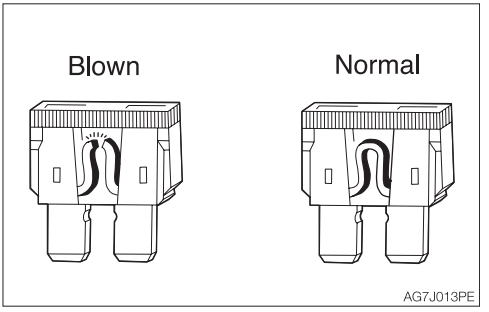

4. If a fuse is blown, replace it with a spare fuse of the same capacity.

Fuse layout and circuits protected

Capacity	Protected circuit	Capacity	Protected circuit
15A	ECM (ACC)	**25A**	Light
10A	Starter switch (C)	**10A**	Wiper
5A	Controller (B)	**25A**	Solenoid
10A	Horn, interior light	**10A**	Controller (ACC)
		20A	Cigarette lighter, radio, beacon lamp
		10A	Alarm
		25A	Air conditioner blower
		10A	Air conditioner compressor
		5A	Air conditioner controller
		25A	Option (1)
		15A	Option (2)
		25A	Option (3)

INSPECTING THE FUSIBLE LINK

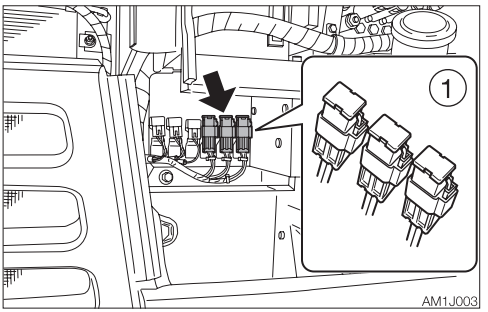

If the machine is not turned on after turning the starter switch to the ON position, the cartridge type fusible link (1) is likely blown. Open the side cover and inspect it. If the fusible link is blown, contact your sales or service dealer.

Note: Fusible links are large type fuses used in high current applications. Like a regular fuse, they act as fuses by protecting the electric components and wirings from damage caused by excessive current draw.

RESTARTING AFTER ADDING FUEL

BLEEDING AIR FROM THE FUEL SYSTEM

IMPORTANT: NEVER use the starter motor to crank the engine in order to prime the fuel system. This may cause the starter motor to overheat and damage the coils, pinion gear and/or ring gear.
IMPORTANT: If the engine stalls due to fuel shortage, add fuel, turn the key to the ON position for 60 seconds, and then turn it to the START position. Running the starter for a long time before there is enough fuel is going through can cause the starter to fail.

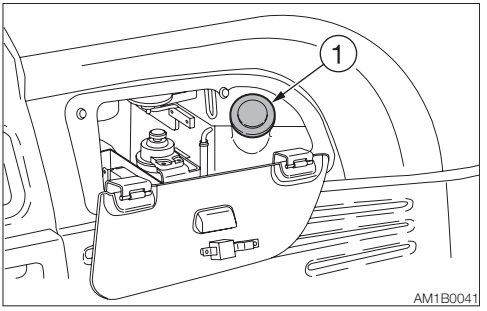

1. Add fuel.

<TB285>

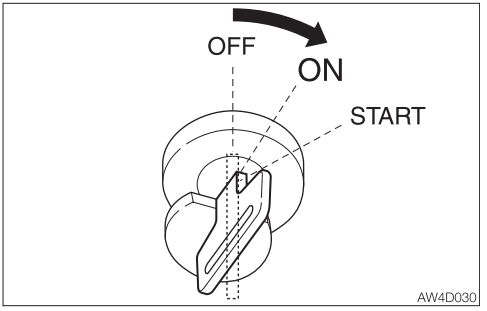

2. Turn the starter key to the ON position and hold it for about 10 to 15 seconds.
   The automatic air bleeder bleeds air from the fuel system.

<TB290>

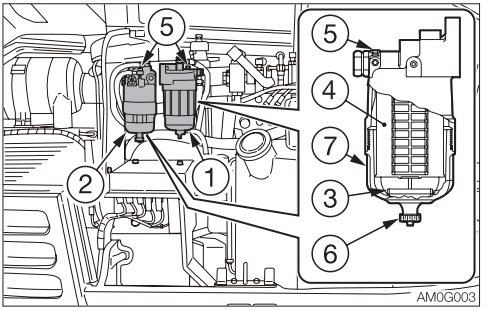

2. Loosen the vent plug (5) of the main fuel filter (2).

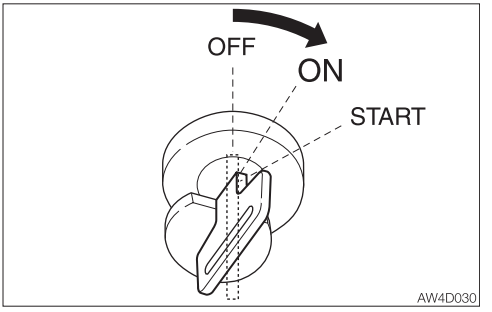

3. Turn the starter key to the ON position and wait for the air to be bled from the vent plug (5).
4. Retighten the vent plug (5) when air bleeding is finished and fuel starts leaking out from around the vent plug (5).
5. Turn and hold the starter key to the ON position for three minutes before turning it back to the OFF position.

Note: Air in the fuel system causes the engine to fail to start or to have other problems. Always bleed air when the fuel tank is emptied or when there is air in the fuel system.

MEMO

IF A WARNING LAMP FLASHES

If an alarm is sounded or a warning lamp starts flashing during operation, park the machine in a safe place and perform the remedy procedures described below.

Warning lamp	Lamp name	Causes and remedies
 AW4J007	**Vehicle and engine emergency lamp**	There is a problem in the machine. Refer to the respective warning lamp below. Get the vehicle or engine error code number from the multi-data display and consult your sales or service dealer referring to the number on the “Vehicle error code list” or “Engine error code list”. Refer to “Vehicle error code list” on pages 6-12 to 6-13. Refer to “Engine error code list” on pages 6-14 to 6-17.
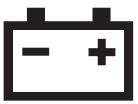 AG7J019	**Battery charge warning lamp**	There is a problem with the fan belt or charger. Check the fan belt for slack or breakage and adjust as necessary. If the lamp continues flashing after maintenance, there is likely a problem with the charger. Consult your sales or service dealer for help. Refer to “Inspecting and adjusting the fan belt” on page 5-24.
 AG7J017	**Engine oil pressure warning lamp**	There is a problem in the engine lubrication system. Check the engine oil level. If the lamp is flashing when the level is normal or even after replenishment of oil or coolant, consult your sales or service dealer. Refer to “Inspecting and replenishing the engine oil” on page 5-19.
 AG7J018	**Coolant temperature warning lamp**	The coolant temperature is too high and the engine is overheating. Refer to “If the engine overheats” on page 6-3.

Warning lamp	Lamp name	Causes and remedies
 AG7J020	**Air cleaner warning lamp**	The air cleaner is clogged. Clean it. Refer to “Cleaning the air cleaner” on page 5-40.
 AW4J009	**Water separator warning lamp**	Water is in the water separator. Drain water. Refer to “Draining the water from the water separator” on page 5-66.
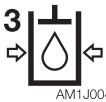 AM1J004	**Third auxiliary hydraulic warning lamp**	Pressure in the third auxiliary hydraulic line is too low Consult your sales or service dealer for help.
 AM1J005	**Overload warning lamp**	This lamp starts flashing if the overload warning device is activated. If it occurs, reduce the load to be lifted. Refer to “Overload warning device” on page 2-55.

VEHICLE ERROR CODE LIST

If an error code appears on the display, consult your sales or service dealer.

Error code	Error details
102	CAN communication error (BusOff)
902	CAN communication error (ECM)
1002	CAN communication error (cluster gauge)
1703	Power supply voltage error (too high)
1704	Power supply voltage error (too low)
1720	Proportional amplifier system abnormality
2503	Sensor voltage error (too high) MMC
2504	Sensor voltage error (too low) MMC
3300	Alternator charge faulty
3401	Engine oil pressure error
3500	Overheat
3600	Air cleaner clogged
3700	Water separator
3800	Hydraulic oil filter clogged
5303	Accelerator sensor error (too high)
5304	Accelerator sensor error (too low)
5603	Lift alarm sensor error (cable break)
5604	Lift alarm sensor error (short circuit)

Error code	Error details
6513	AUX1 slide switch neutral error (too high)
6514	AUX1 slide switch neutral error (too low)
6613	AUX2 slide switch neutral error (too high)
6614	AUX2 slide switch neutral error (too low)
6503	AUX1 slide switch voltage value error (too high)
6504	AUX1 slide switch voltage value error (too low)
6603	AUX2 slide switch voltage value error (too high)
6604	AUX2 slide switch voltage value error (too low)
6731	AUX3 input error
6813	AUX1 button A error
6913	AUX1 button B error
7106	Pump PWM output electric current error (short circuit)
7105	Pump PWM output electric current error (open)
7206	AUX1 (L) PWM output electric current error (short circuit)
7205	AUX1 (L) PWM output electric current error (open)
7306	AUX1 (R) PWM output electric current error (short circuit)
7305	AUX1 (R) PWM output electric current error (open)
7406	AUX2 (L) PWM output electric current error (short circuit)
7405	AUX2 (L) PWM output electric current error (open)
7506	AUX2 (R) PWM output electric current error (short circuit)
7505	AUX2 (R) PWM output electric current error (open)

PWM = Pulse width modulation

ENGINE ERROR CODE LIST

If an error code appears on the display, consult your sales or service dealer.

<TB285>

Error code		Error details	DTC
SPN	FMI		
1210	4	Engine fuel rack position sensor: Shorted to low source	P1202
	3	Engine fuel rack position sensor: Shorted to high source	P1203
108	4	Barometric pressure sensor: Shorted to low source	P2228
	3	Barometric pressure sensor: Shorted to high source	P2229
	2	Barometric pressure sensor: Intermittent fault	P2230
1136	4	E-ECU internal temperature sensor: Shorted to low source	P0668
	3	E-ECU internal temperature sensor: Shorted to high source	P0669
	2	E-ECU internal temperature sensor: Intermittent fault	P1664
	0	E-ECU internal temperature: Too high	P0634
110	4	Engine coolant temperature sensor: Shorted to low source	P0117
	3	Engine coolant temperature sensor: Shorted to high source	P0118
	2	Engine coolant temperature sensor: Intermittent fault	P0119
	0	Engine coolant temperature: Too high	P0217
1079	4	Sensor 5V: Shorted to low source	P0642
	3	Sensor 5V: Shorted to high source	P0643
	2	Sensor 5V: Intermittent fault	P1644
158	1	System voltage: Too low	P0562
	0	System voltage: Too high	P0563
1078	4	Engine fuel injection pump speed sensor: Shorted to low source	P0340
522402	4	Auxiliary speed sensor: Shorted to low source	P1340
522241	4	Engine fuel rack actuator relay: Circuit fault A	P1222
	3	Engine fuel rack actuator relay: Circuit fault B	P1223
	7	(Reserved)	P1221
	2	Engine fuel rack actuator relay: Intermittent fault	P1224
522243	4	Air heater relay: Circuit fault A	P1232
	3	Air heater relay: Circuit fault B	P1233
	2	Air heater relay: Intermittent fault	P1234
522242	4	Cold start device: Circuit fault A	P1242
	3	Cold start device: Circuit fault B	P1243
	2	Cold start device: Intermittent fault	P1244

<TB285>

Error code		Error details	DTC
SPN	FMI		
522251	4	EGR stepping motor “A”: Circuit fault A	P1402
	3	EGR stepping motor “A”: Circuit fault B	P1403
522252	4	EGR stepping motor “B”: Circuit fault A	P1412
	3	EGR stepping motor “B”: Circuit fault B	P1413
522253	4	EGR stepping motor “C”: Circuit fault A	P1422
	3	EGR stepping motor “C”: Circuit fault B	P1423
522254	4	EGR stepping motor “D”: Circuit fault A	P1432
	3	EGR stepping motor “D”: Circuit fault B	P1433
100	4	Oil pressure switch: Shorted to low source	P1192
	1	Oil pressure: Too low	P1198
167	4	Battery charge switch: Shorted to low source	P1562
	1	Charge warning	P1568
522314	0	Engine coolant temperature: Abnormal temperature	P1217
522323	0	Air cleaner: Mechanical malfunction	P1101
522329	0	Oily water separator: Mechanical malfunction	P1151
190	0	Engine speed: Overspeed condition	P0219
638	4	Engine fuel rack actuator: Shorted to low source	P1212
	3	Engine fuel rack actuator: Shorted to high source	P1213
	7	Engine fuel rack actuator: Mechanical malfunction	P1211
	2	Engine: Malfunction	P1214
639	12	High-speed CAN communication: Communication fault	U0001
630	2	E-ECU internal fault: EEPROM checksum error (Data Set 2)	P1601
	12	E-ECU internal fault: EEPROM read/write fault	P0601
628	12	E-ECU internal fault: Flash ROM checksum error (Main software)	P0605
	2	E-ECU internal fault: Flash ROM checksum error (Data Set 1)	P1605
	2	E-ECU internal fault: Flash ROM checksum error (Data Set 2)	P1606
1485	4	E-ECU main relay: Shorted to low source	P0686
522727	12	E-ECU internal fault: Sub-CPU error A	P1610
	12	E-ECU internal fault: Sub-CPU error B	P1611
	12	E-ECU internal fault: Sub-CPU error C	P1612
522728	12	E-ECU internal fault: Engine map data version error	P1620
522730	12	Immobilizer: CAN communication fault	U0167
	8	Immobilizer: Pulse communication fault	U1167
1202	2	Immobilizer: System fault	U0426

<TB290>

Error code		Error details	DTC
SPN	FMI		
110	3	Coolant temperature sensor failure (high-voltage error)	P0118
	4	Coolant temperature sensor failure (low-voltage error)	P0117
	0	Engine overheat	P1173
157	3	Common rail pressure sensor failure (high-voltage error)	P0193
	4	Common rail pressure sensor failure (low-voltage error)	P0192
	2	Common rail pressure too hi	P0089
	0	Common rail pressure (too high)	P0088
172	3	Intake air temperature sensor failure (high-voltage error)	P0113
	4	Intake air temperature sensor failure (low-voltage error)	P0112
174	3	Fuel temperature sensor failure	P0183
	4	Fuel temperature sensor failure	P0182
190	0	Engine overspeed	P0219
628	2	ROM error	P0601
633	7	Pressure limiter open	P1095
636	2	Cam sensor failure (no signal)	P0340
	7	Cam sensor failure (phase shift)	P1345
639	2	CAN BusOff error	U2104
	3	CAN timeout error	U2106
651	3	Injector #1 failure	P0201
652	3	Injector #2 failure	P0202
653	3	Injector #3 failure	P0203
654	3	Injector #4 failure	P0204
675	3	Glow lamp failure	P0381
676	3	Glow relay failure	P0380
677	3	Starter cut relay failure	P0615

<TB290>

Error code		Error details	DTC
SPN	FMI		
723	2	Crank sensor failure (no signal)	P0335
	8	Crank sensor failure (abnormal signal)	P0336
968	2	Idle up/down switch failure	P1225
987	3	Check engine lamp failure	P0650
1077	2	CPU error	P0606
1079	2	5V power system 1 failure	P1631
1080	2	5V power system 2 failure	P1632
1239	1	Pump pressure low (fuel leak)	P1093
	1	Pump pressure low (fuel leak)	P0087
1347	0	SCV failure	P0090
1381	3	Clogged fuel filter failure (high-voltage error)	P1294
	4	Clogged fuel filter failure (low-voltage error)	P1293
1485	2	Main relay failure	P1625
10001	3	EGR sensor failure (brushless specified)	P0487
10002	2	EGR valve failure	P0488
10003	2	Injector com 1 failure	P1261
10004	2	Injector com 2 failure	P1262
10005	1	Charge circuit 1 failure	P0611
10006	1	Charge circuit 2 failure	P0612
10007	2	Sub CPU error	P0606
10008	2	A/D converter failure	P1630
10009	2	5V power system 3 failure	P1633
10010	2	5V power system 4 failure	P1634
10011	2	5V power system 5 failure	P1635
10013	2	EEPROM error	P0603

OTHER SYMPTOMS

For symptoms not included in the table below or if the problem persists after the proper remedies have been taken, consult your sales or service dealer.

Symptoms	Major causes	Remedies
Left and right operating levers do not move smoothly	• Insufficient grease on the left and right operating levers	• Grease the levers. Refer to page 5-67.
Travel levers, blade lever and pedals do not move smoothly	• Insufficient grease on travel levers, blade lever and pedals	• Grease the levers and pedals. Refer to page 5-67.
Operation of hoe attachment, dozer blade, auxiliary hydraulics, slewing or traveling is not possible.	• Safety lock lever is raised (locked)	• Lower (release) the safety lock lever. Refer to page 2-32.
	• Fuse is blown	• Replace the fuse. Refer to page 6-6.
Digging force is insufficient	• Hydraulic oil level too low	• Add to the specified level. Refer to page 5-22.
	• Hydraulic oil is not warm enough	• Perform the warm-up. Refer to page 3-8.
	• Air cleaner is clogged	• Clean the air cleaner. Refer to page 5-40.
	• Hydraulic oil is not of suitable type	• Replace the hydraulic oil. Refer to page 5-57.
Traveling is not possible or not smooth	• Stones or foreign objects are stuck	• Remove the foreign object.
Machine veers to the right/left	• Stones or foreign objects are stuck	• Remove the foreign object.
	• Crawler belt tension is faulty.	• Check and adjust (ask your sales or service dealer). Refer to page 5-28.
Travel speed cannot be changed	• Fuse is blown	• Replace the fuse. Refer to page 6-6.

Symptoms	Major causes	Remedies
Slewing is not possible or not smooth	• Insufficient grease on slew bearing	• Grease the bearing. Refer to page 5-30.
Hydraulic oil temperature is too high	• Hydraulic oil level too low	• Add up to the specified level. Refer to page 5-22.
Starter motor turns but engine does not start	• Insufficient fuel	• Add fuel. Refer to page 5-21.
	• Air in fuel system	• Bleed air. Refer to page 6-8.
	• Water in fuel system	• Drain water. Refer to page 5-31.
	• Fuel is frozen.	• Warm the fuel pipe with hot water or wait until the ambient temperature becomes high.
	• Engine control system is faulty.	• Adjust or repair (ask your sales or service dealer).
	• Fuel line is faulty.	• Adjust or repair (ask your sales or service dealer).
	• Preheating device is faulty.	• Adjust or repair (ask your sales or service dealer).
Crawlers come off	• Crawlers too loose	• Check and adjust (ask your sales or service dealer). Refer to page 5-28.
	• Tensioning cylinder valve is loose.	• Increase the tension. Refer to page 5-68 to 5-70.

Symptoms	Major causes	Remedies
Engine exhaust is white or bluish	• Excessive engine oil	• Adjust to the specified level. Refer to page 5-19.
	• Insufficient engine warm-up.	• Perform the warm-up operation. Refer to page 3-5.
	• Engine control system is faulty.	• Adjust or repair (ask your sales or service dealer).
	• Fuel line is faulty.	• Adjust or repair (ask your sales or service dealer).
	• Prolonged idling (approx. two hours or more)	• Increase the engine RPM and check for smoke.
	• Poor fuel	• Replace the fuel.
Engine exhaust is occasionally black	• Air cleaner is clogged	• Clean the air cleaner. Refer to page 5-40.
	• Engine control system is faulty.	• Adjust or repair (ask your sales or service dealer).
	• Fuel line is faulty.	• Adjust or repair (ask your sales or service dealer).
	• Clogging in the exhaust line.	• Adjust or repair (ask your sales or service dealer).
Irregular noise is produced from the engine (combustion or mechanical noise)	• Low quality fuel is being used	• Replace the fuel.
	• Engine is overheating	• Refer to “If the engine overheats” on page 6-3.
	• Damage inside the muffler	• Replace the muffler. For replacement, ask your sales or service dealer.

LOWERING THE BOOM TO THE GROUND

If the hoe attachment must be lowered to the ground while the engine is stopped, use the following procedure.

Procedure 1 (machines with an accumulator)
Perform this operation within 10 minutes after the engine stopping.
1. Sit at the operator's seat.
2. Turn the starter switch to the ON position.
3. Lower the safety lock lever to the unlock position
4. Slowly push the operating lever forward to lower the boom.

Procedure 2 (machines without an accumulator)
This operation is dangerous and requires experience. Ask your sales or service dealer for it.

⚠ WARNING

- **Stop the engine and allow the machine to cool down before performing maintenance.**
  - **The engine and the hydraulic system and many other parts of the machine are hot immediately after the engine is stopped. Touching these parts will cause burns.**
  - **The hydraulic oil is also hot and under high pressure immediately after the engine is stopped. Be careful when loosening the caps or plugs. Working on the machine under these conditions could result in burns or injuries due to the hot oil spurting out.**
- **Keep away from the working area when the hoe attachment is lowered. You may be hit by dirt falling out of the bucket or the hoe attachment as it drops.**
- **Stand in a position away from danger of lowering boom and loosen the hose nut. Otherwise, you could be hit by the boom.**
- **Do not loosen or remove the hoses not located in the specified places. Oil may spurt out if wrongly handled.**
- **Slowly turn the hose nut and lower the boom at a slow pace.**

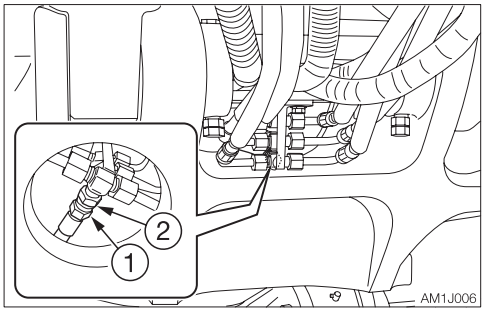

2-Piece boom

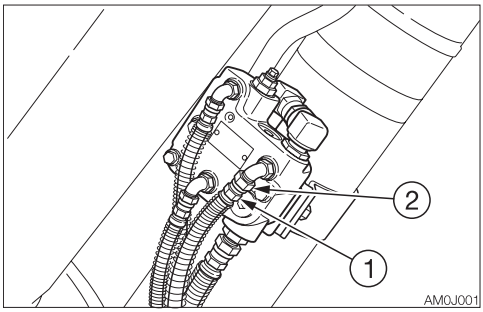

1. Place a pan under the hose to catch the waste oil.
2. Hold the hose fitting (1) with a wrench and slowly loosen the hose nut (2) with another wrench.
3. The oil in the boom cylinder is drained and the hoe attachment is lowered.
4. After the hoe attachment is lowered to the ground, check the safety and stability of the machine.
5. Hold the hose fitting (1) with a wrench and tighten the hose nut (2) with another wrench.
   - Tightening torque: 24.5 to 29.4 N·m (18.1 to 21.7 ft-lb.)

TOWING

⚠ WARNING

When towing, serious injury or death could result, if performed incorrectly or the wire rope being used is inappropriate or not properly inspected.

- **It becomes dangerous if the wire rope breaks or becomes disengaged. Use a wire rope appropriate for the required tractive force.**
- **Do not use a wire rope that is kinked, twisted or otherwise damaged.**
- **Do not apply heavy loads abruptly to the wire rope.**
- **Wear safety gloves when handling the wire rope.**
- **Make sure there is an operator on the machine being towed as well as on the machine that is towing.**
- **Never tow on slopes.**
- **Do not let anyone come near to the wire rope while towing.**

IMPORTANT: Do not tow a machine if its engine does not start or if the machine does not run. Doing so could damage the machine being towed.
IMPORTANT: Be sure to follow the steps below closely when using the towing hole to tow. Failure to heed even one of the steps may cause damage to the towing hole or other parts of the frame.

Towing the machine

Use the procedure described below to tow heavy objects or the machine itself if it should get stuck in the mud and not be able to get out on its own.

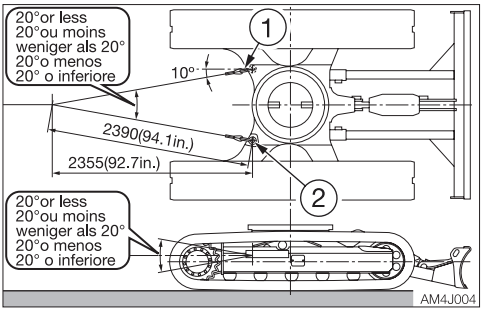

- Permissible forces: 125.2 kN (28146 lbf)
  Do not tow using only a towing hole on one side.

1. Attach the wire rope to the shackle (1).
2. Fasten the shackle (1) to the towing holes (2).
3. Make sure that the wire rope is at a cone angle of 20° or less to the travel frame.
4. Move the machine to tension the wire rope.
5. Move the machine at a low speed of 2 km/h (1.24 mph) or less to a place (convenient location for repair) a short distance from the site.

IF THE CAB OR CANOPY IS DAMAGED

⚠ WARNING

Immediately replace the damaged cab or canopy. Serious injury or death may occur if the machine is operated with damaged cab/canopy.
Do not operate the machine until the replacement is complete. Do not try to repair the damaged cab or canopy by welding. Doing so could endanger the safety of the cab/canopy.

Cab part number:
Applicable machine models
185000001 to 185000283
190000001 to 190000233
05686-60100

185000284 to 185000757
190000234 to 190000833
05686-63100

185000758 or later
190000834 or later
05686-00000

SPECIFICATIONS



BASIC SPECIFICATIONS

<TB285>

Type				Mono boom	2-Piece boom Type A	2-Piece boom Type B
MASS						
Operating mass	kg (lb)	Rubber crawlers		8465 (18660)	8670 (19120)	8780 (19360)
		Steel crawlers		8700 (19185)	8905 (19635)	9015 (19880)
PERFORMANCE						
Bucket capacity (Standard bucket)	m^3 (cu. ft.)	Heaped		0.245 (8.65)		
		Struck		0.185 (6.53)		
Slew speed	min^{-1} (rpm)			10.3 (10.3)		
Travel speed	km/h (mph)	Rubber crawlers	1st	2.6 (1.62)		
			2nd	5.0 (3.11)		
		Steel crawlers	1st	2.5 (1.55)		
			2nd	4.8 (2.98)		
Gradeability	(degrees)			35		
Ground pressure	kPa (psi)	Rubber crawlers		37.9 (5.5)	38.8 (5.63)	39.3 (5.7)
		Steel crawlers		39.4 (5.72)	40.3 (5.85)	40.8 (5.92)
Noise level dB (A)		Sound power level		L_{WA} 99		
		Emission sound pressure level at the operator's position (ISO 6396, 2008:)		L_{pA} 74		
ENGINE						
Manufacturer and model				Yanmar 4TNV98T-ZXWTB2*		
Rated output		Net (ISO 14396)	kW/min^{-1} (hp/rpm)	51.6/2000 (69.1/2000)		
		Net (ISO 9249/ SAE J1349)	kW/min^{-1} (hp/rpm)	49.6/2000 (66.5/2000)		
Displacement			ml (cu.in.)	3318 (202.5)		
Starter			V-kW	12-3.0		
Alternator			V-kW	12-0.96		
Battery			V-A·h	12-72		

*: Applicable machine models
185000286 or later

<TB290>

Type				Mono boom	2-Piece boom Type A	2-Piece boom Type B
MASS						
Operating mass	kg (lb)	Rubber crawlers		8515 (18770)	8720 (19230)	8830 (19470)
		Steel crawlers		8750 (19295)	8955 (19745)	9065 (19990)
PERFORMANCE						
Bucket capacity (Standard bucket)	m^3 (cu. ft.)	Heaped		0.245 (8.65)		
		Struck		0.185 (6.53)		
Slew speed	min^{-1} (rpm)			10.3 (10.3)		
Travel speed	km/h (mph)	Rubber crawlers	1st	2.6 (1.62)		
			2nd	5.0 (3.11)		
		Steel crawlers	1st	2.5 (1.55)		
			2nd	4.8 (2.98)		
Gradeability	(degrees)			35		
Ground pressure	kPa (psi)	Rubber crawlers		38.1 (5.53)	39.0 (5.66)	39.5 (5.73)
		Steel crawlers		39.6 (5.74)	40.5 (5.87)	41.0 (5.95)
Noise level dB (A)	Sound power level			L_{WA} 99		
	Emission sound pressure level at the operator's position (ISO 6396, 2008:)			L_{pA} 74		
ENGINE						
Manufacturer and model				ISUZU AU-4JJ1TYSB-03		
Rated output	Net (ISO 14396)	kW/min^{-1} (hp/rpm)		54.0/2000 (72.4/2000)		
	Net (ISO 9249/ SAE J1349)	kW/min^{-1} (hp/rpm)		51.4/2000 (68.9/2000)		
Displacement	ml (cu.in.)			2999 (183)		
Starter	V-kW			12-2.5		
Alternator	V-kW			12-1.32		
Battery	V-A·h			12-72		

MACHINE DIMENSIONS

Mono boom

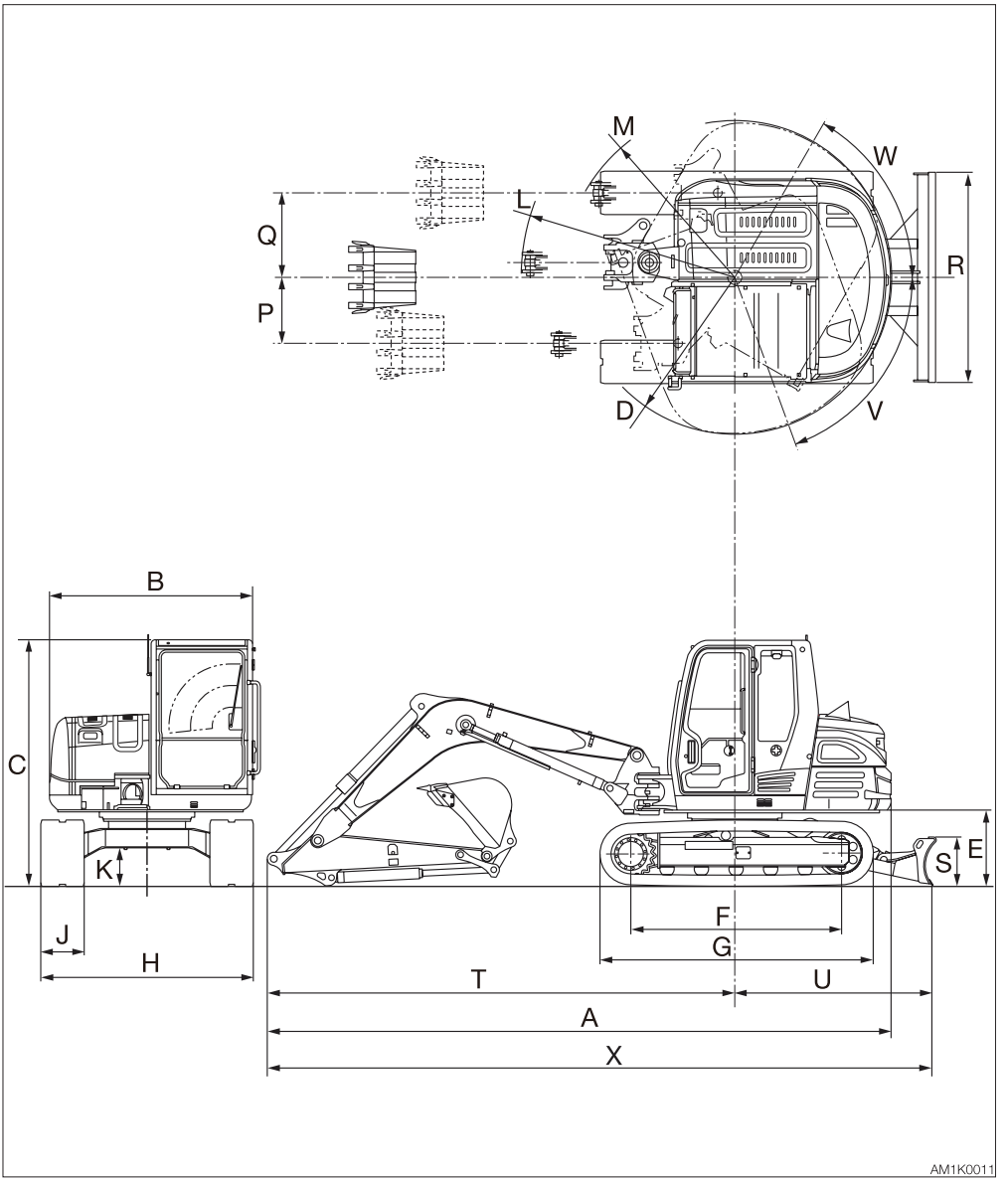

<TB285/TB290>

Mono boom

Unit: mm (inch)

	Item	Standard arm	Middle arm	Long arm
		Rubber crawlers		
A	Overall length	6530 (257.1)	6575 (258.9)	6660 (262.3)
B	Upperstructure overall width	2140 (84.3)	←	←
C	Overall height	2550 (100.5) 2560 (100.8)*	←	←
D	Slew radius	1650 (65)	←	←
E	Clearance height under upperstructure	770 (30.4) 760 (29.9)*	←	←
F	Crawler base	2210 (87) 2180 (85.8)*	←	←
G	Crawler overall length	2855 (112.4) 2830 (111.4)*	←	←
H	Crawler overall width	2200 (86.6)	←	←
J	Crawler shoe width	450 (17.7)	←	←
K	Ground clearance of undercarriage	370 (14.6) 360 (14.2)*	←	←
L	Minimum radius of equipment and attachment	2240 (88.2)	2360 (92.9)	2495 (98.2)
M	Minimum radius of equipment at maximum front offset	1810 (71.3)	1910 (75.3)	2030 (79.9)
P	Offset distance of bucket (Right swing)	685 (27)	←	←
Q	Offset distance of bucket (Left swing)	890 (35)	←	←
R	Dozer blade width	2200 (86.6)	←	←
S	Dozer blade height	500 (19.7)	←	←
T	Front distance to axis of rotation	4890 (192.5)	4935 (194.3)	5020 (197.7)
U	Dozer blade distance to axis of rotation	2055 (81.0) 2060 (81.1)*	←	←
V	Boom swing angle (Left)	70°	←	←
W	Boom swing angle (Right)	60°	←	←
X	Overall length (dozer blade at rear)	6945 (273.5)	7000 (275.6)	7085 (278.9)

*: With steel crawlers

2-Piece boom

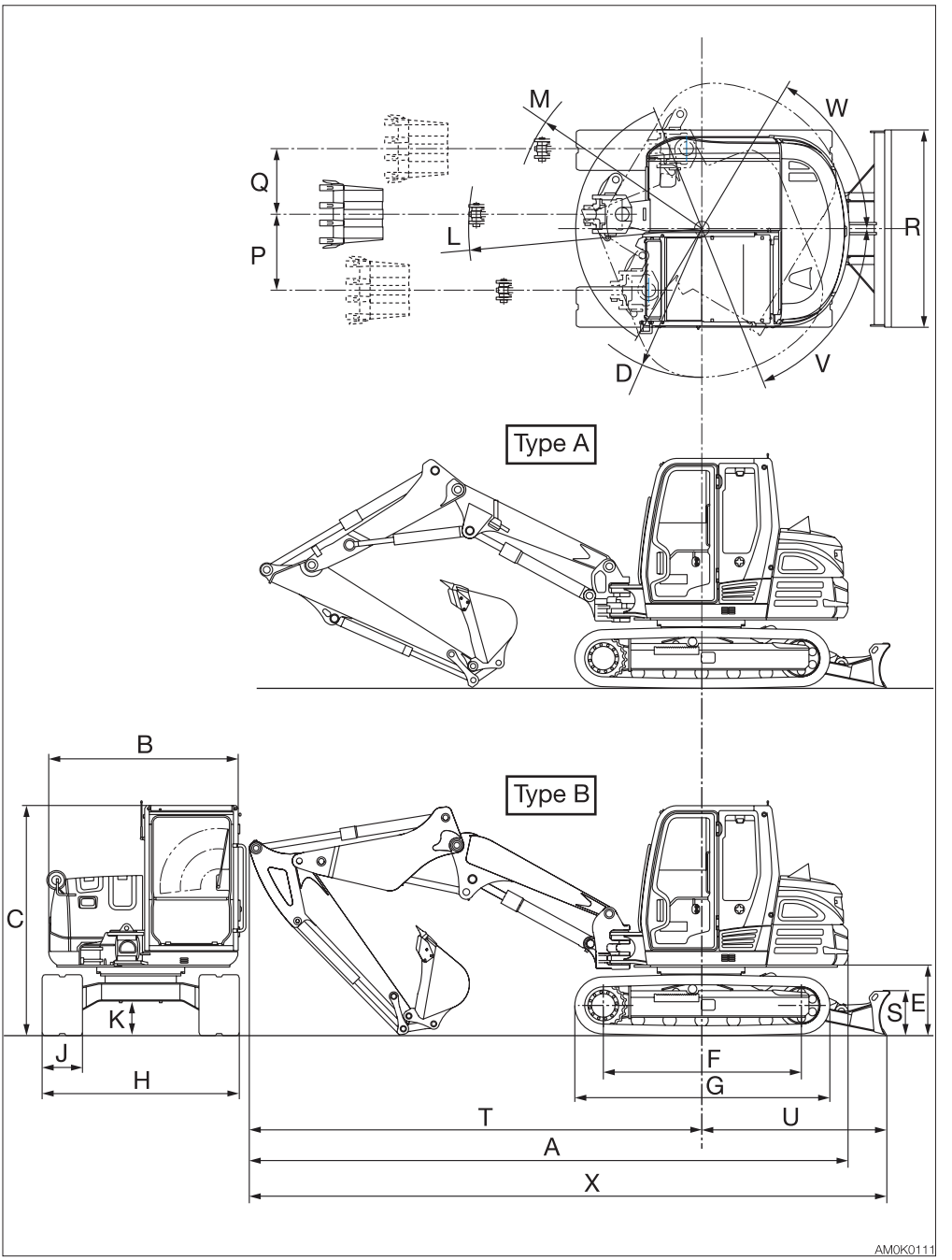

<TB285/TB290>

2-Piece boom

Unit: mm (inch)

	Item	Type A Rubber crawlers	Type B Rubber crawlers
A	Overall length	6550 (257.8)	6700 (263.8)
B	Upperstructure overall width	2140 (84.3)	←
C	Overall height	2550 (100.5) 2560 (100.8)*	←
D	Slew radius	1650 (65)	←
E	Clearance height under upperstructure	770 (30.4) 760 (29.9)*	←
F	Crawler base	2210 (87) 2180 (85.8)*	←
G	Crawler overall length	2855 (112.4) 2830 (111.4)*	←
H	Crawler overall width	2200 (86.6)	←
J	Crawler shoe width	450 (17.7)	←
K	Ground clearance of undercarriage	370 (14.6) 360 (14.2)*	←
L	Minimum radius of equipment and attachment	2580 (101.6)	2675 (105.3)
M	Minimum radius of equipment at maximum front offset	2105 (82.9)	2190 (86.2)
P	Offset distance of bucket (Right swing)	850 (33.4)	←
Q	Offset distance of bucket (Left swing)	730 (28.7)	←
R	Dozer blade width	2200 (86.6)	←
S	Dozer blade height	500 (19.7)	←
T	Front distance to axis of rotation	4910 (193.2)	5060 (199.2)
U	Dozer blade distance to axis of rotation	2055 (81.0) 2060 (81.1)*	←
V	Boom swing angle (Left)	70°	←
W	Boom swing angle (Right)	60°	←
X	Overall length (dozer blade at rear)	6965 (274.2)	7120 (280.4)

*: With steel crawlers

OPERATING RANGES

Mono boom

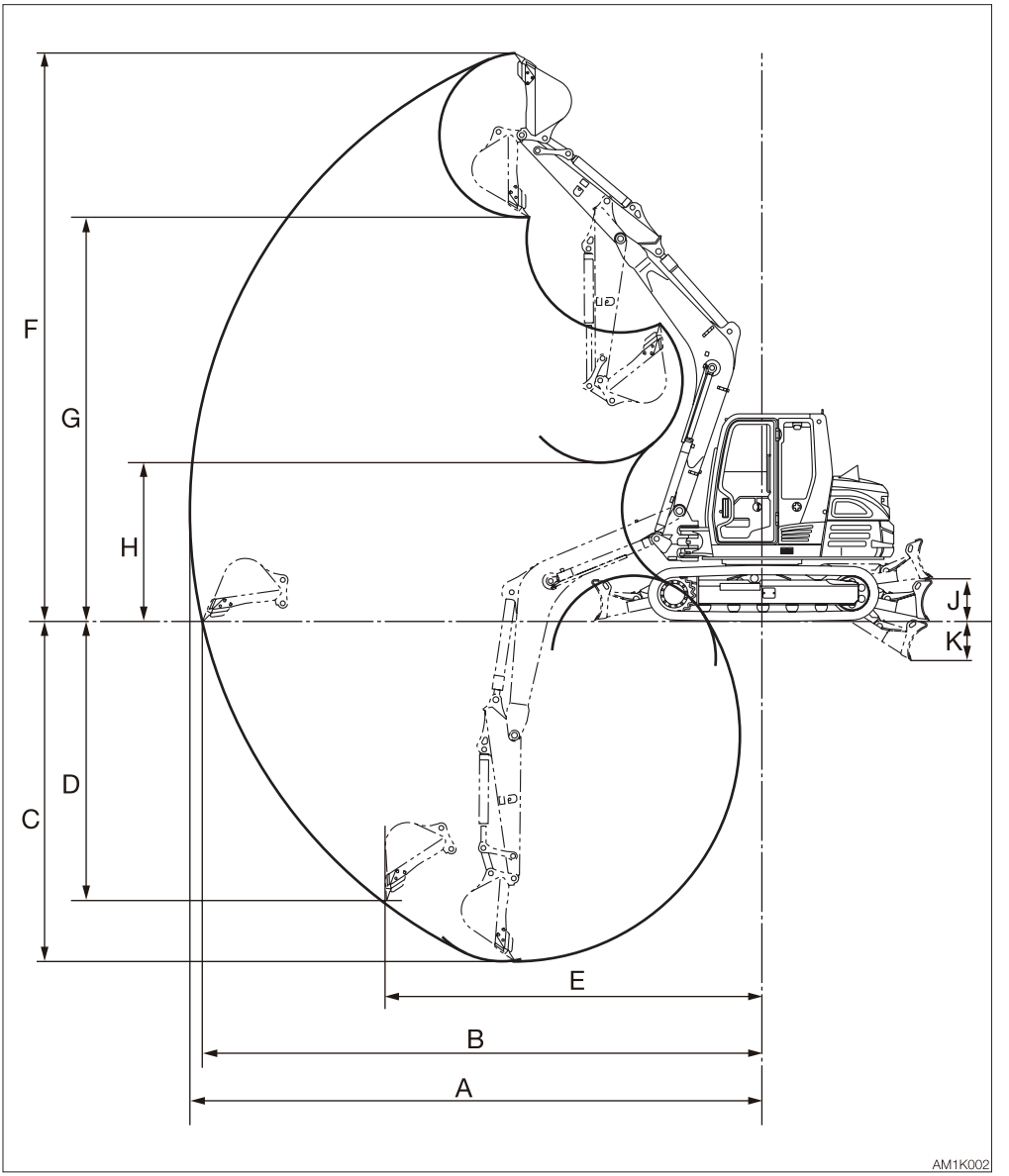

<TB285/TB290>

Mono boom

Unit: mm (inch)

	Item	Standard arm	Middle arm	Long arm
		Rubber crawlers		
A	Maximum reach	7105 (279.6)	7275 (286.3)	7435 (292.7)
B	Maximum reach at ground reference plane	6950 (273.7)	7125 (280.6)	7290 (287.1)
C	Maximum digging depth	4230 (166.6)	4410 (173.7)	4580 (180.4)
D	Maximum vertical digging depth	3470 (136.5)	3650 (143.6)	3820 (150.4)
E	Reach at maximum vertical digging depth	4685 (184.4)	4720 (185.8)	4755 (187.1)
F	Maximum height of cutting edge	7030 (276.8)	7165 (282.1)	7290 (287.1)
G	Maximum dumping height	4995 (196.7)	5135 (202.1)	5260 (207.1)
H	Minimum dumping height	1950 (76.7)	1785 (70.3)	1640 (64.6)
J	Dozer blade maximum lifting	505 (19.9)	←	←
K	Dozer blade maximum lowering	500 (19.7) 560 (22.0) *	←	←

*: With an angle dozer blade

2-Piece boom

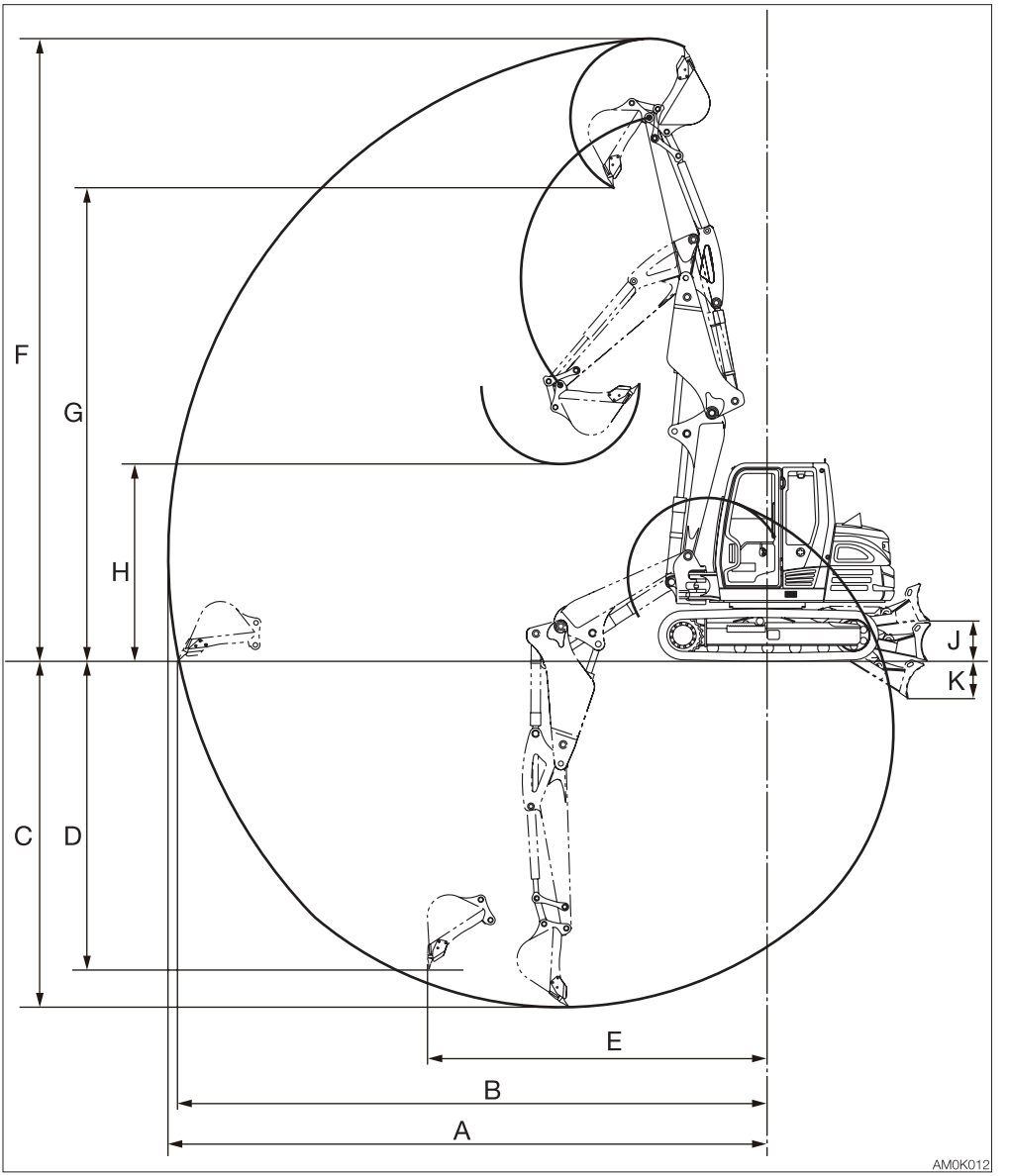

<TB285/TB290>

2-Piece boon

Unit: mm (inch)

	Item	Type A Rubber crawlers	Type B Rubber crawlers
A	Maximum reach	7700 (303.1)	7730 (304.3)
B	Maximum reach at ground reference plane	7560 (297.7)	7595 (299.0)
C	Maximum digging depth	4455 (175.5)	4480 (176.4)
D	Maximum vertical digging depth	4030 (158.6)	3990 (157.1)
E	Reach at maximum vertical digging depth	4045 (159.3)	4385 (172.6)
F	Maximum height of cutting edge	7970 (313.7)	8035 (316.3)
G	Maximum dumping height	5990 (235.9)	6110 (240.5)
H	Minimum dumping height	2295 (90.4)	2540 (99.9)
J	Dozer blade maximum lifting	505 (19.9)	←
K	Dozer blade maximum lowering	500 (19.7) 560 (22.0) *	←

*: With an angle dozer blade

MEMO

LIFTING CAPACITIES

Rated lift capacity chart

- The loads in the charts do not exceed 87% of hydraulic lift capacity or 75% of tipping load.
- Figures marked with an asterisk (*) are hydraulically-limited capacities.
- The mass of slings and any other lifting devices shall be deducted from the rated load to determine the net load that may be lifted.
- The load point is the bucket hinge pin, and the bucket posture is with the standard bucket completely retracted under the arm.
- Unit: daN (lbs)

Load hooking system

A load hooking system must be provided with the following capabilities.

1. A system which can withstand two-and-a-half times the rated lift capacity no matter at what position the load is applied.
2. A system that poses no risk of the lifted load falling from the hooking device. For example, equipped with a hook slippage prevention device.
3. A system that poses no risk of the hooking system slipping from the hoe attachment.

⚠ WARNING

- **Do not attempt to lift or hold any load that is greater than these rated values at their specified load radii and height.**
- **The rated lift capacities are based on the machine being level and situated on a firm supporting surface. For safe lifting, the operator is expected to make due allowance for the particular job conditions such as soft or uneven ground, non-level condition, load to the machine sides, hazardous conditions, experience of personnel, etc. The operator and other personnel should fully acquaint themselves with the operator's manual furnished by the manufacturer before operating this machine. When operating the machine, the safety rules of the equipment must also be followed.**
- **Do not travel while lifting a load; It is very dangerous.**

Standard arm <TB285>

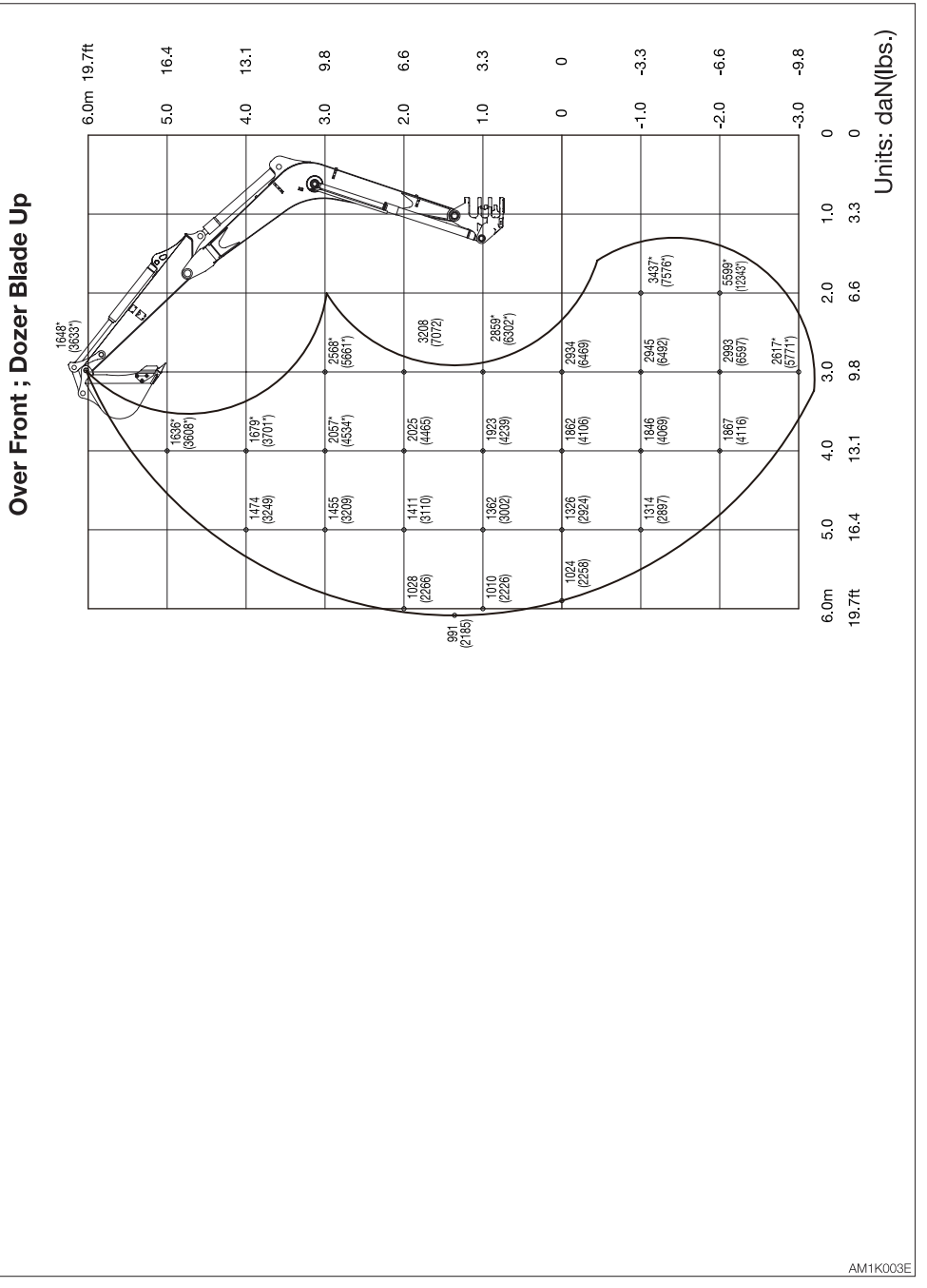

Standard arm <TB285>

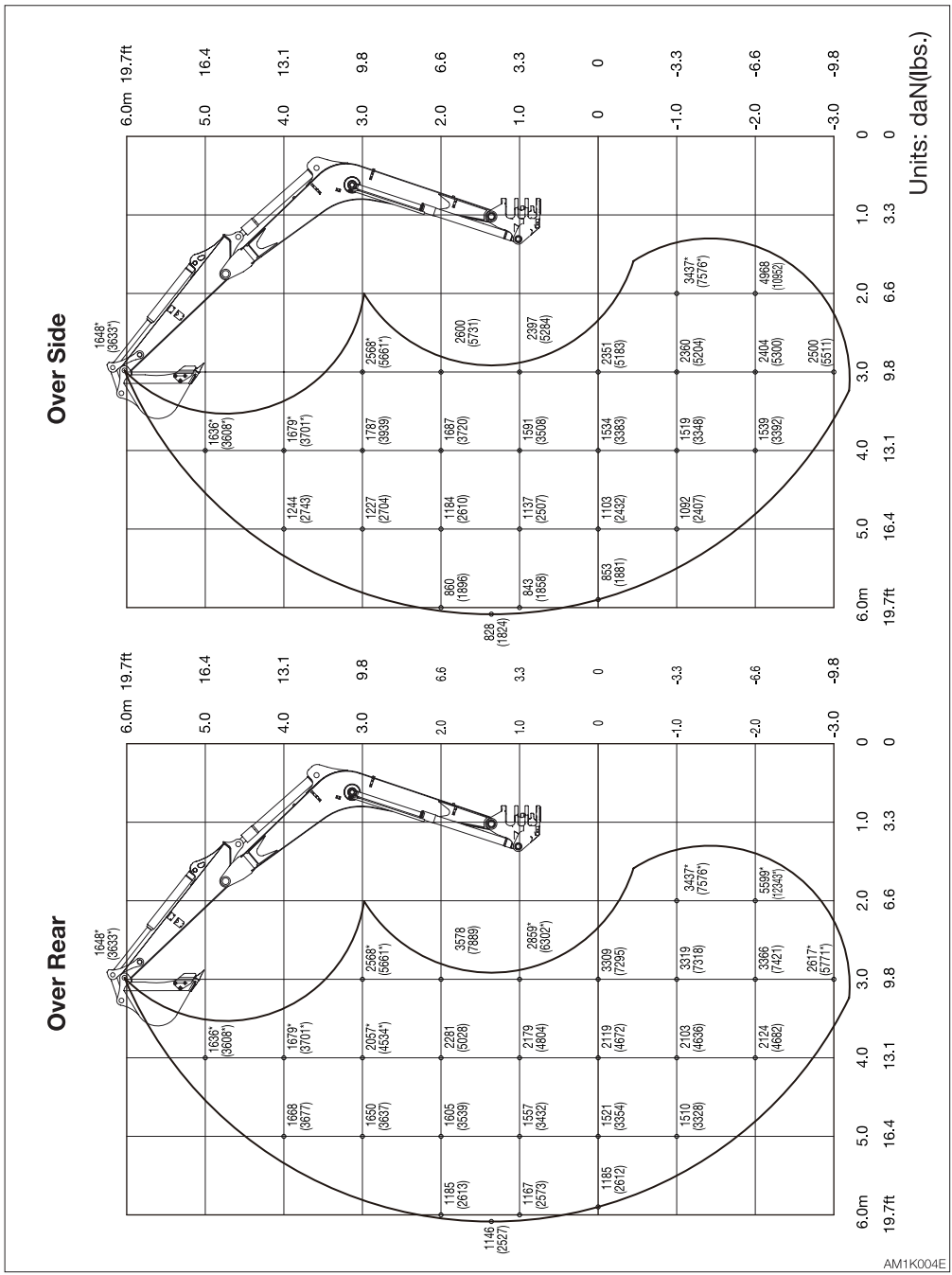

Middle arm <TB285>

Over Front ; Dozer Blade Up

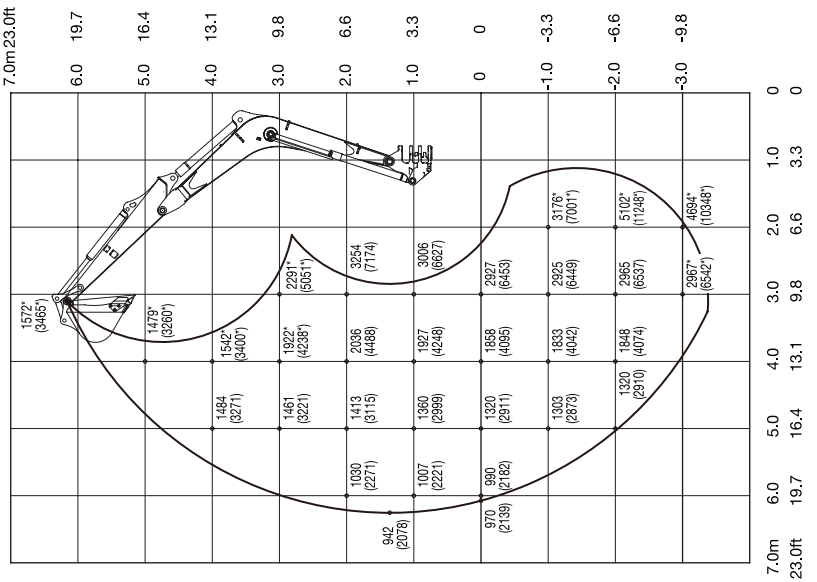

Units: daN(lbs.)

AM1K005E

Middle arm <TB285>

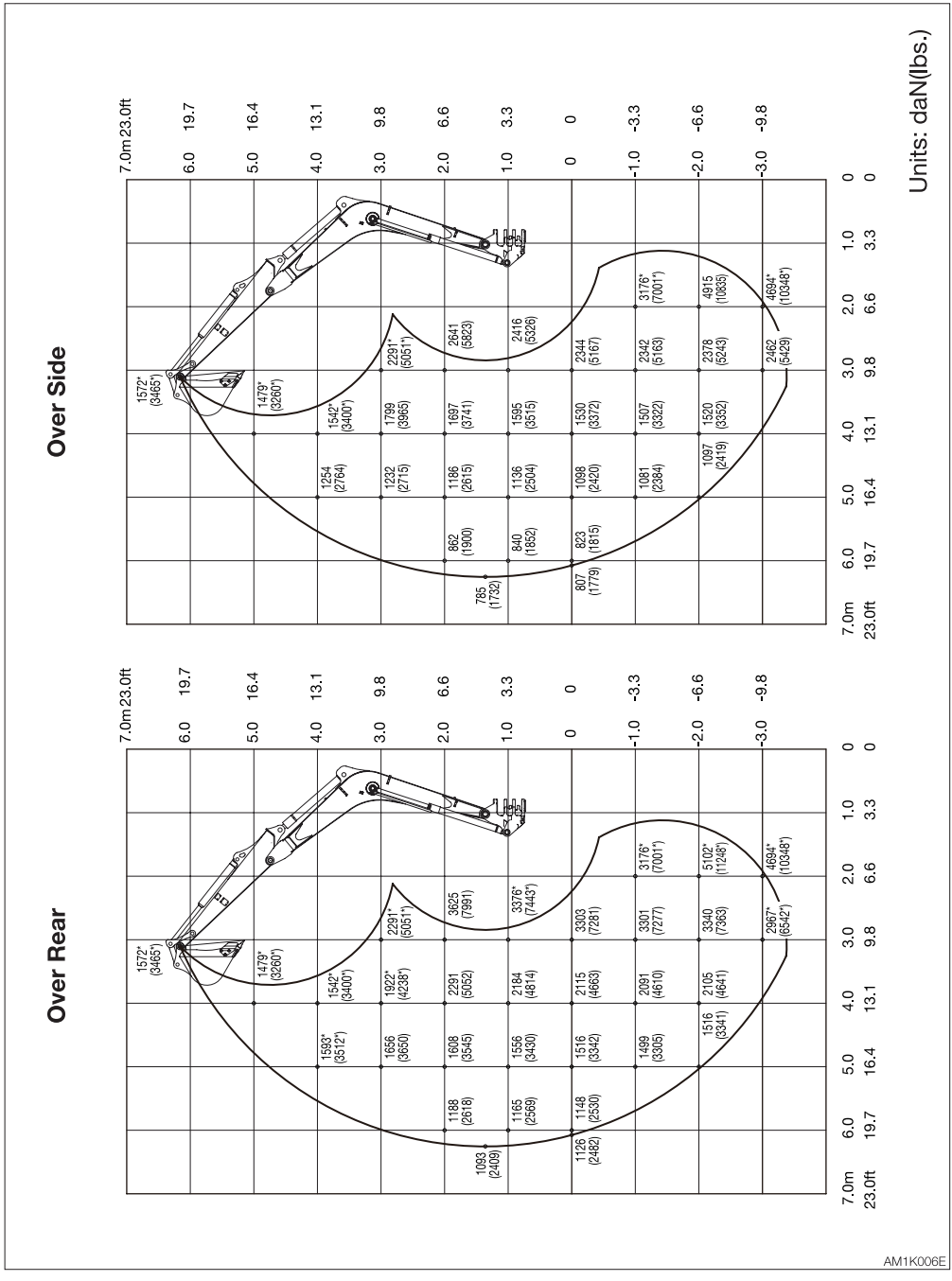

Long arm <TB285>

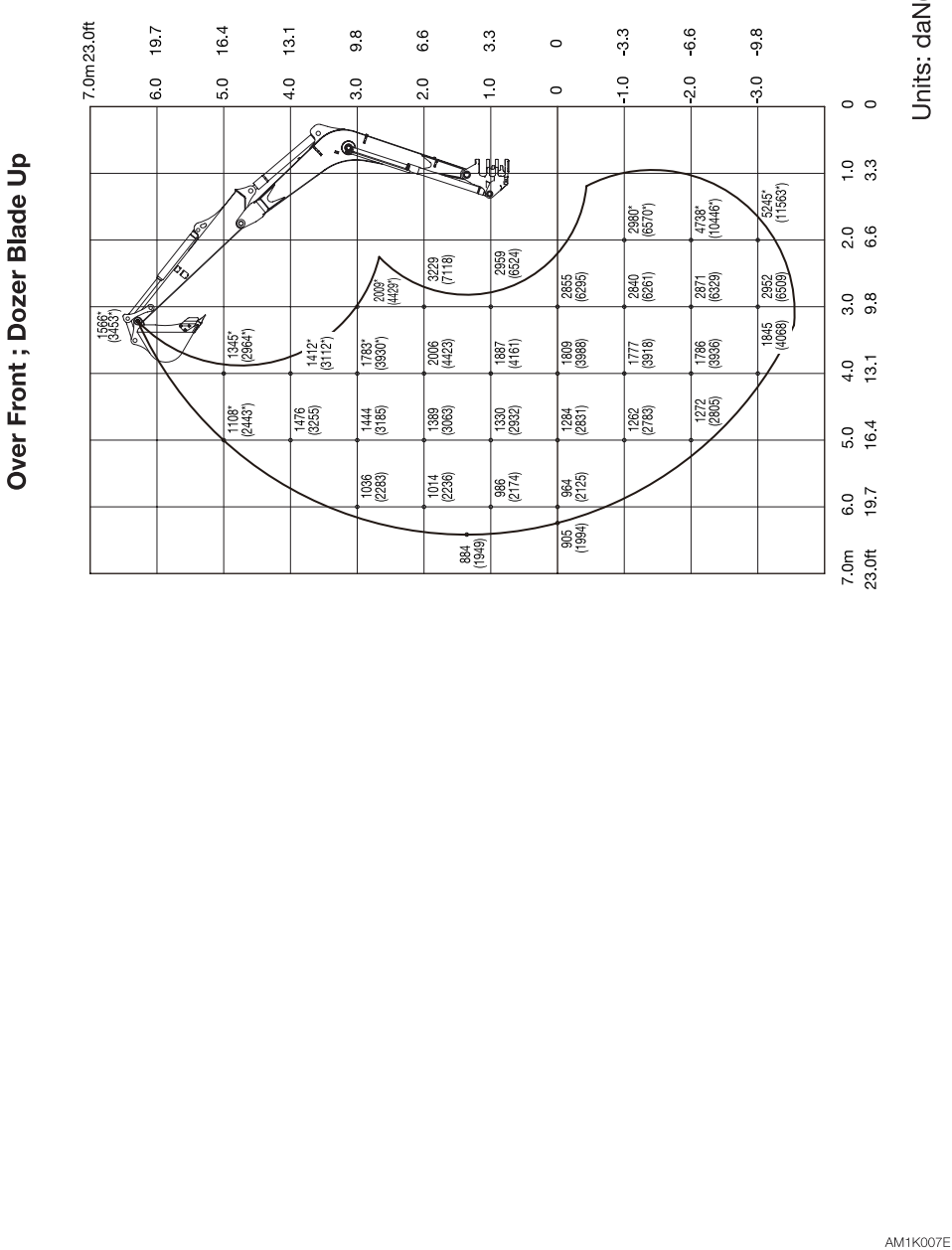

Long arm <TB285>

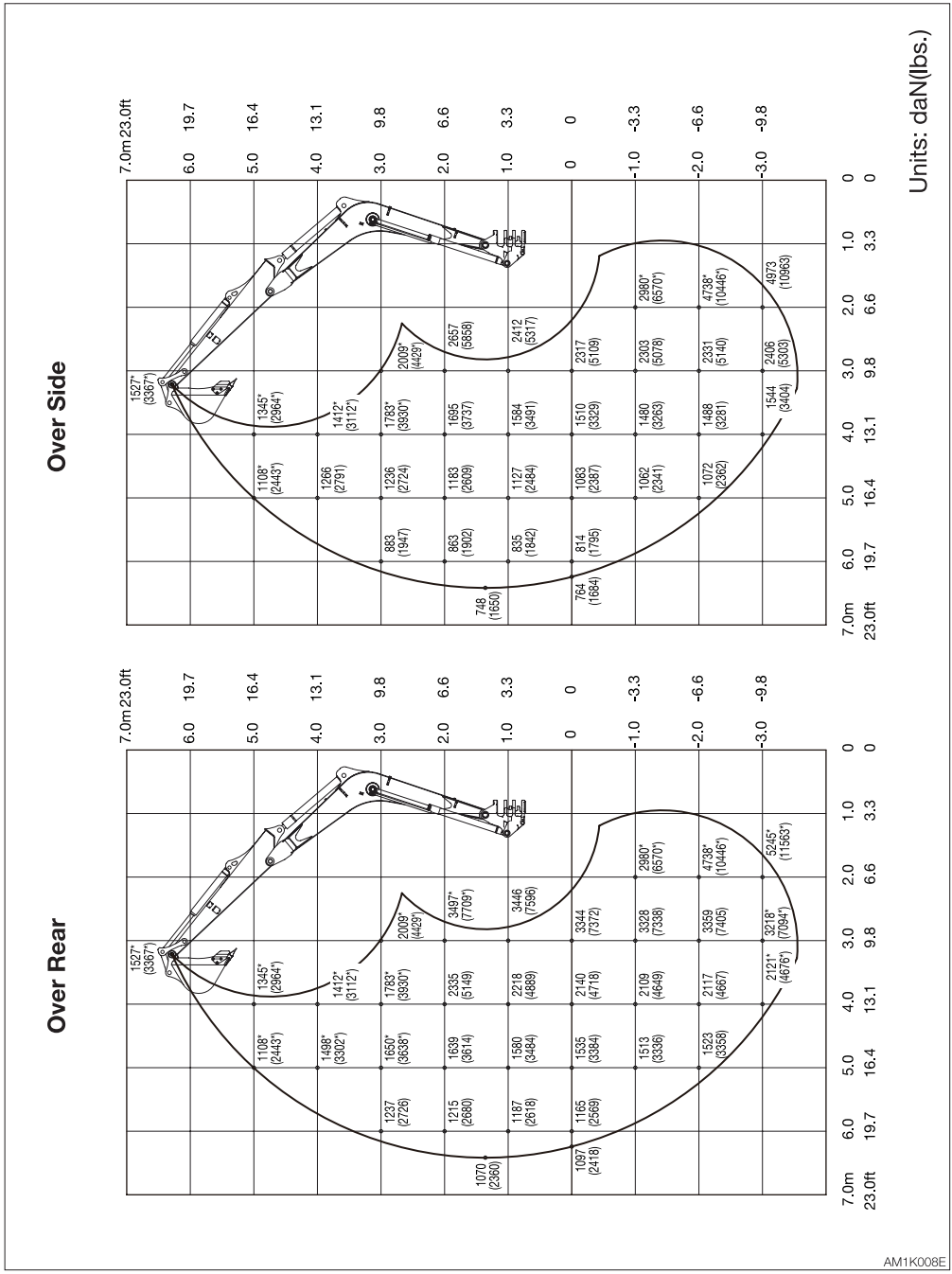

Standard arm <TB290>

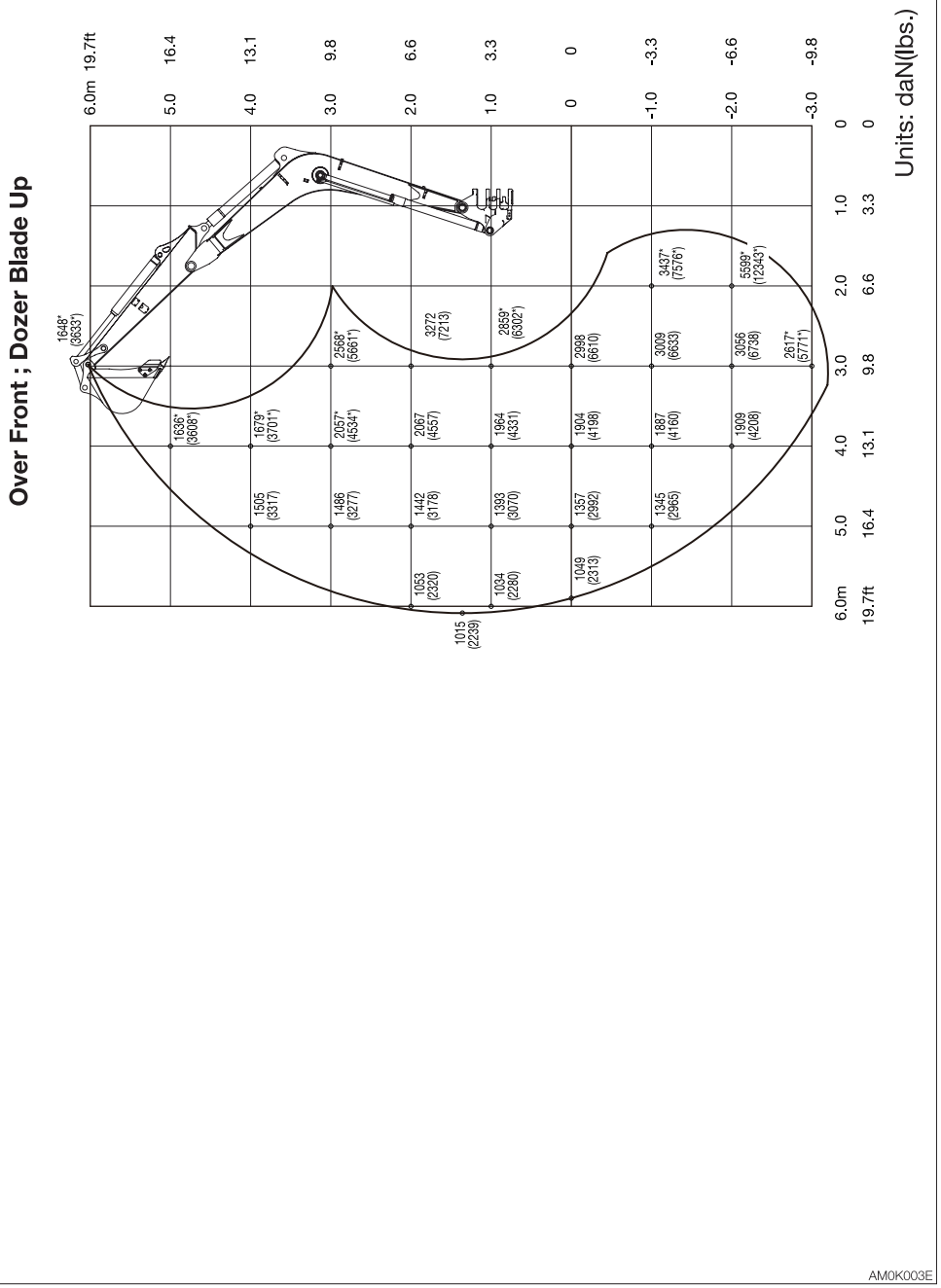

Standard arm <TB290>

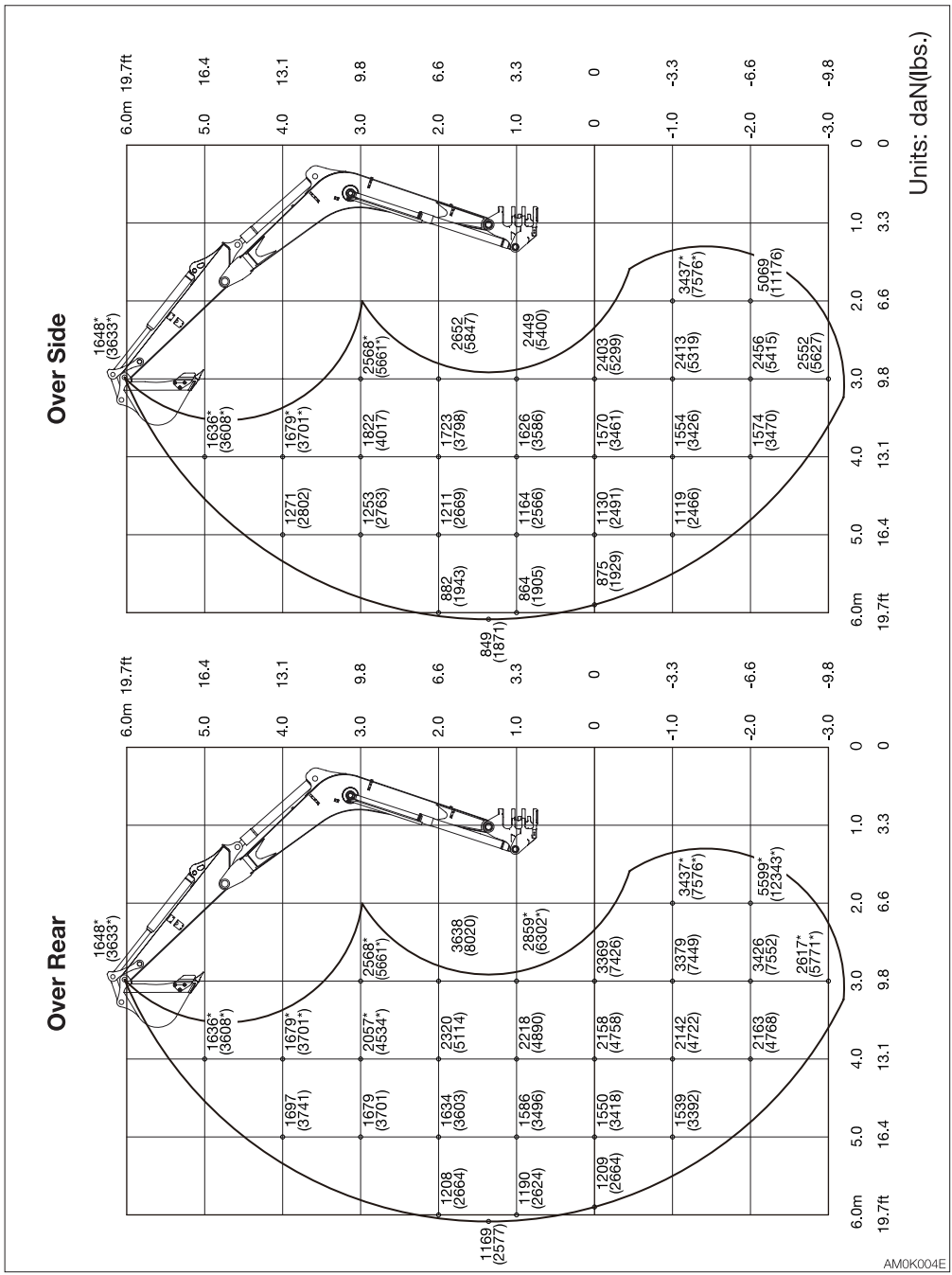

Middle arm <TB290>

Over Front ; Dozer Blade Up

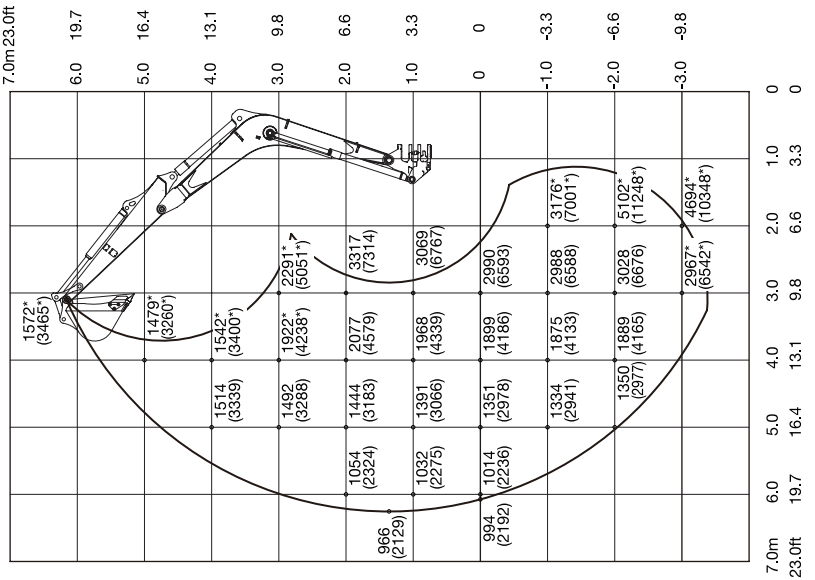

Units: daN(lbs.)

AM0K005E

Middle arm <TB290>

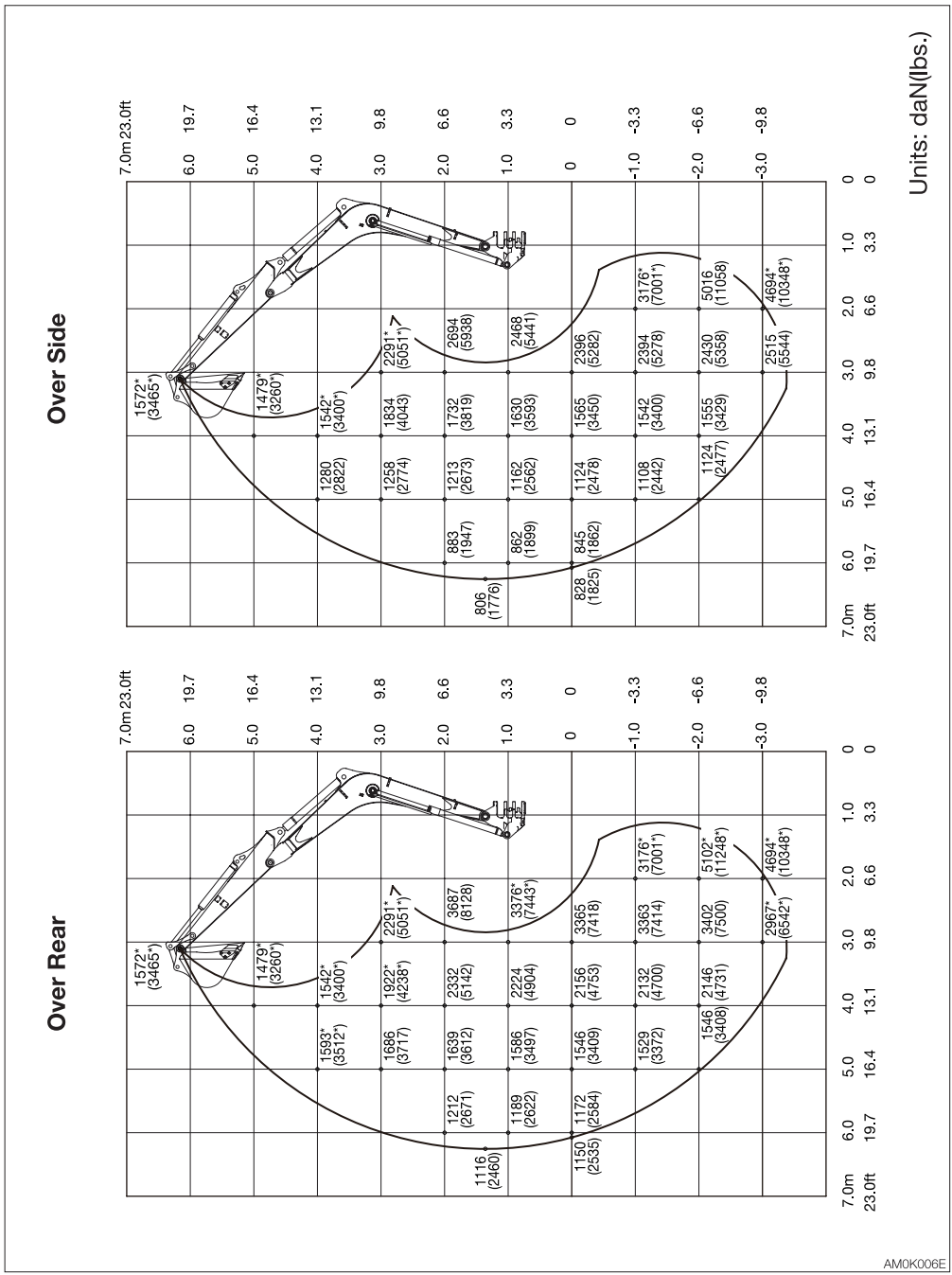

Long arm <TB290>

Over Front ; Dozer Blade Up

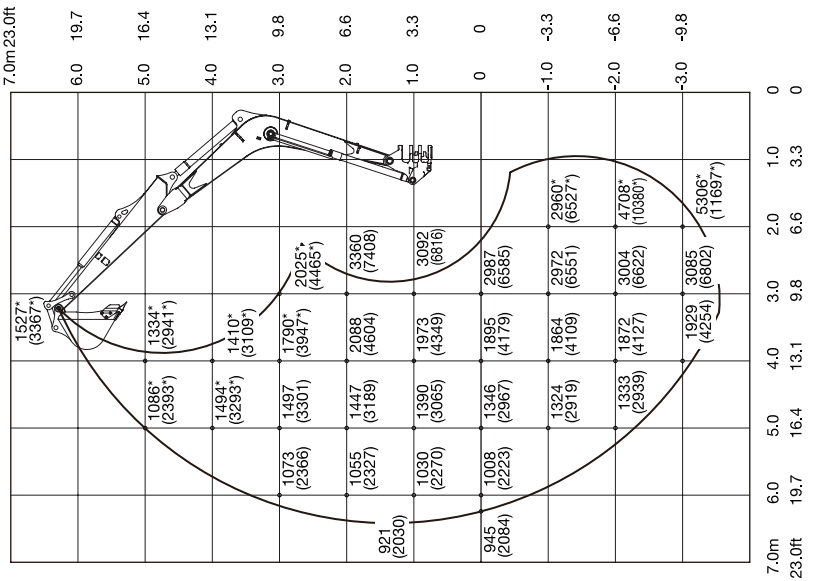

Units: daN(lbs.)

AM0K007E

Long arm <TB290>

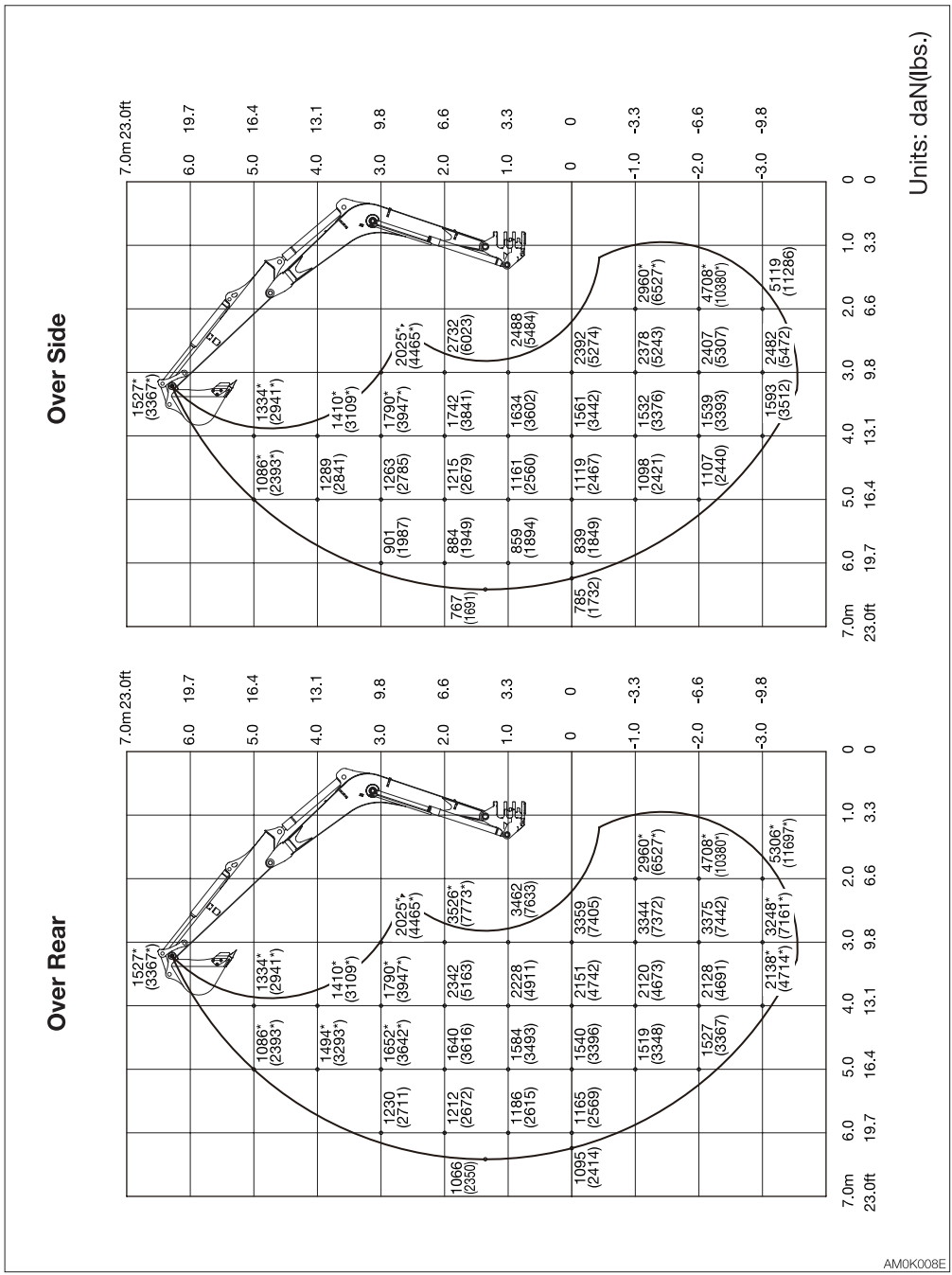

2-Piece boom Type A <TB285> Equipped with Extra weight

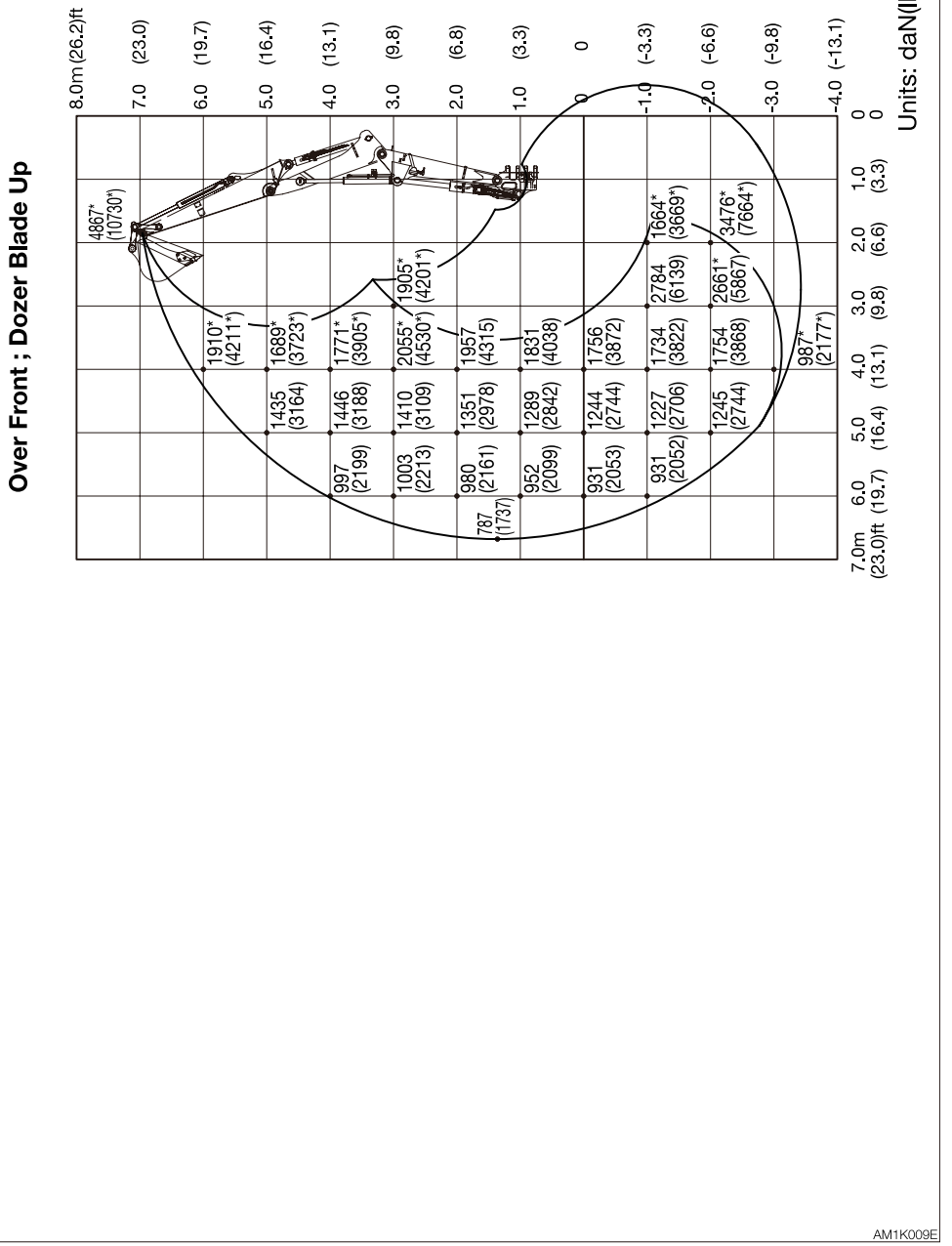

2-Piece boom Type A <TB285> Equipped with Extra weight

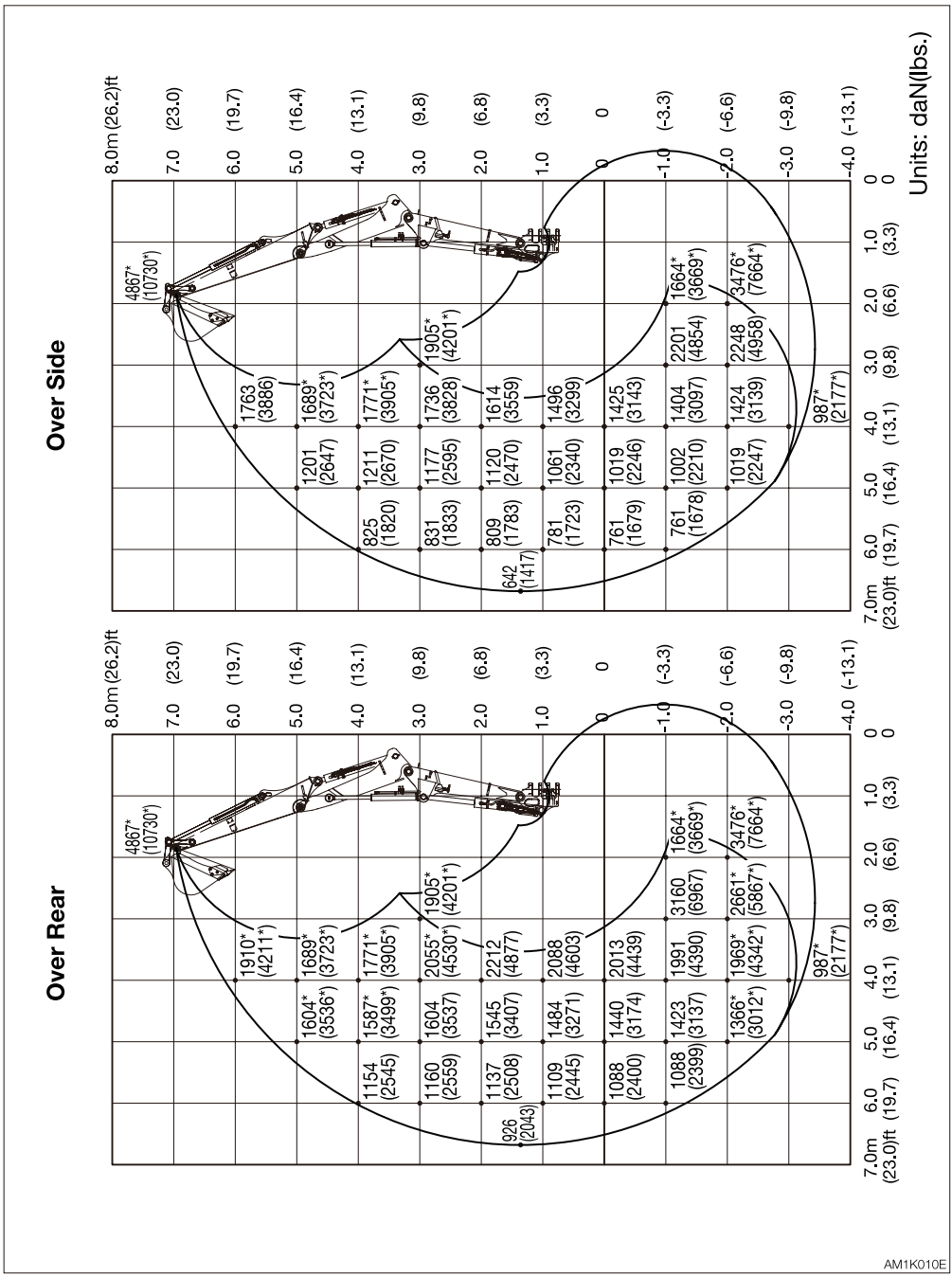

2-Piece boom Type A <TB290> Equipped with Extra weight

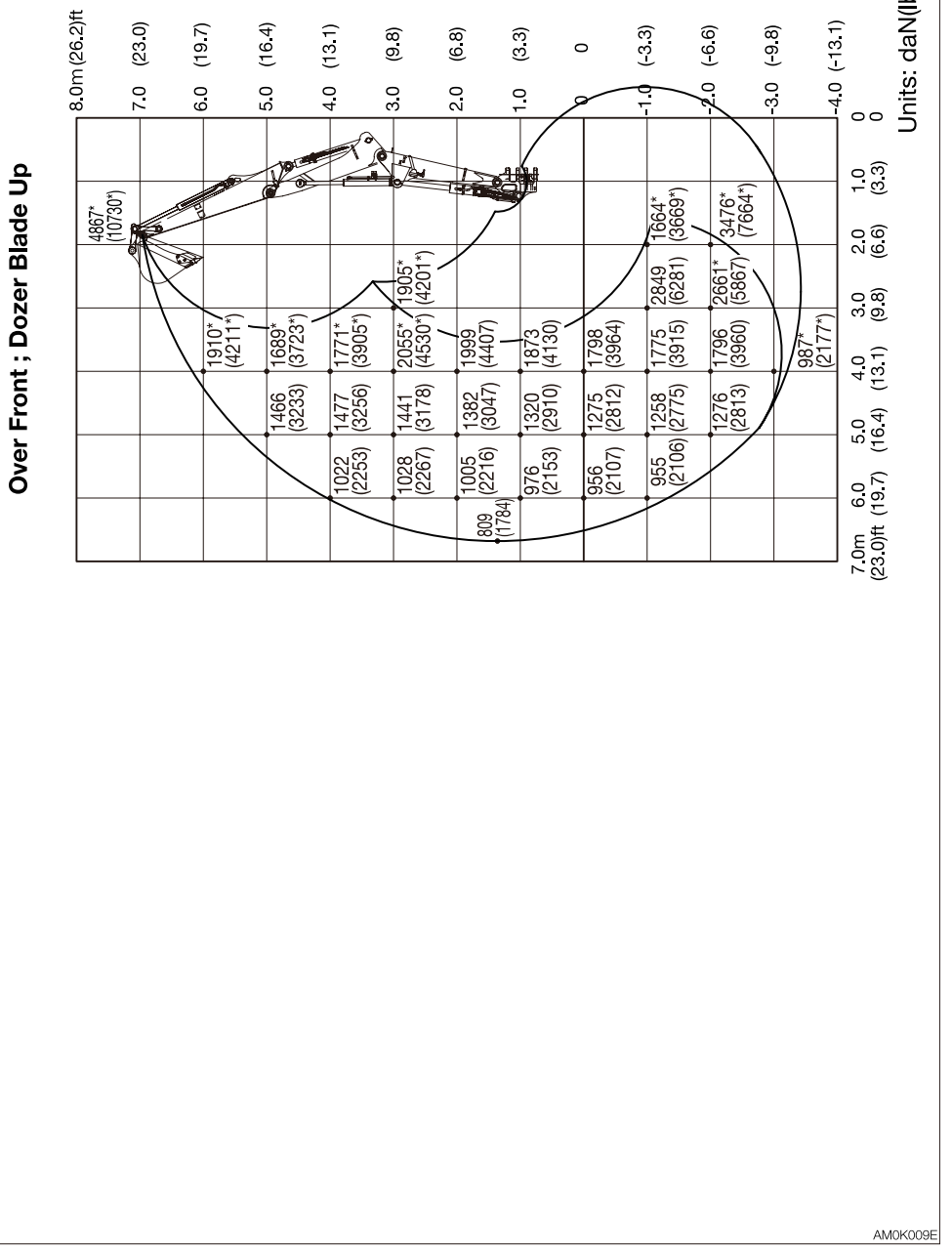

2-Piece boom Type A <TB290> Equipped with Extra weight

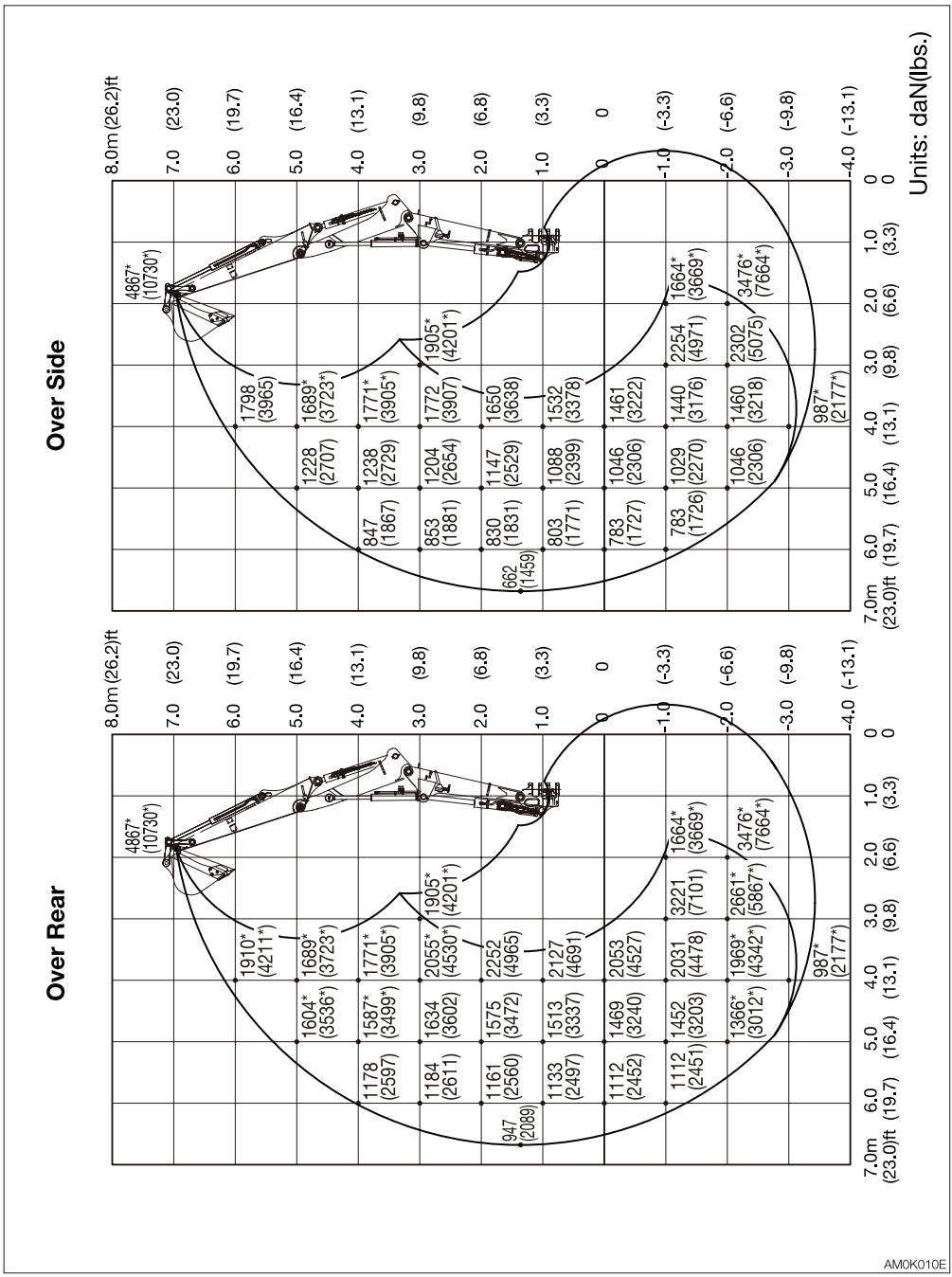

2-Piece boom Type B <TB285> Equipped with Extra weight

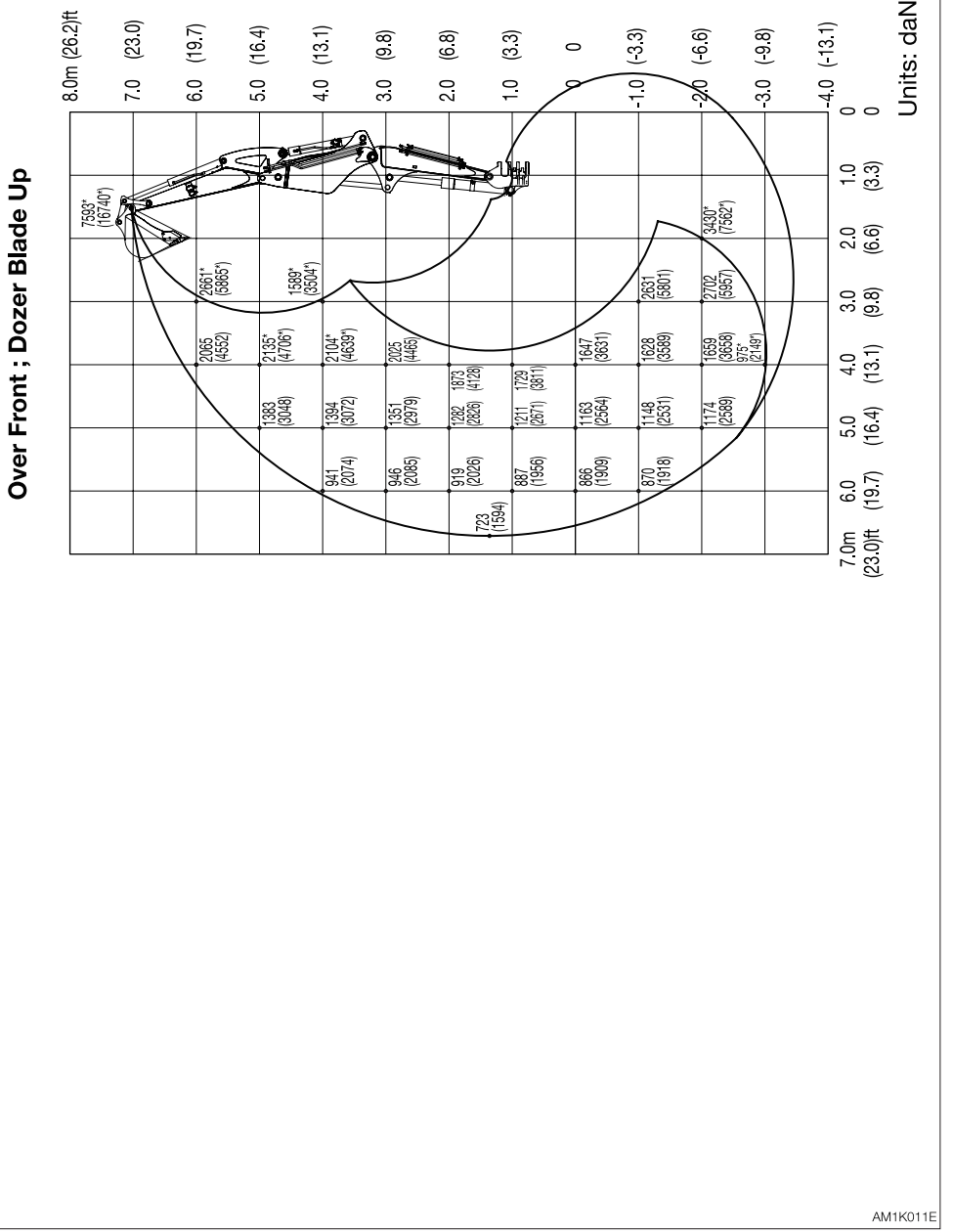

AM1K011E

2-Piece boom Type B <TB285> Equipped with Extra weight

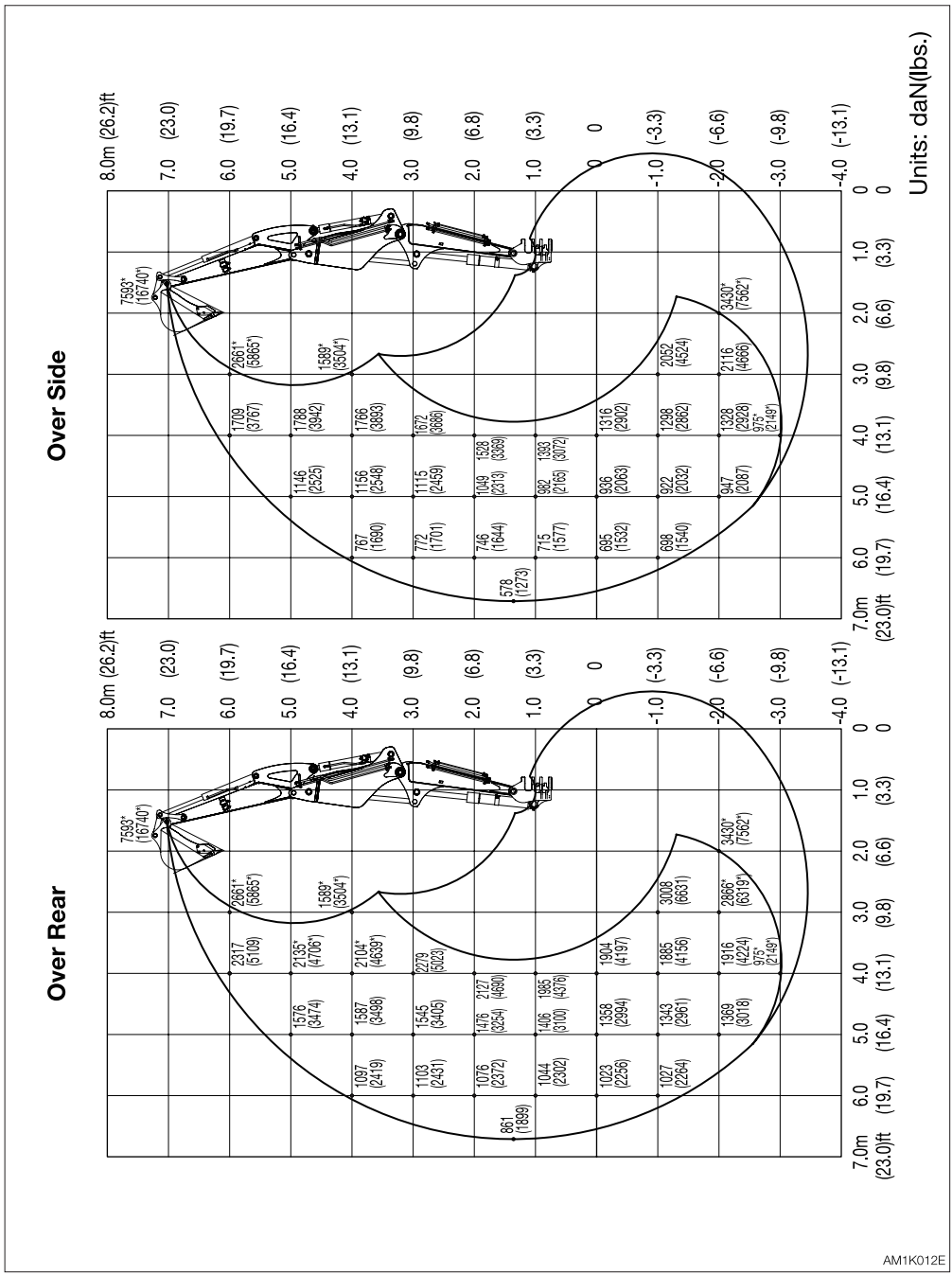

2-Piece boom Type B <TB290> Equipped with Extra weight

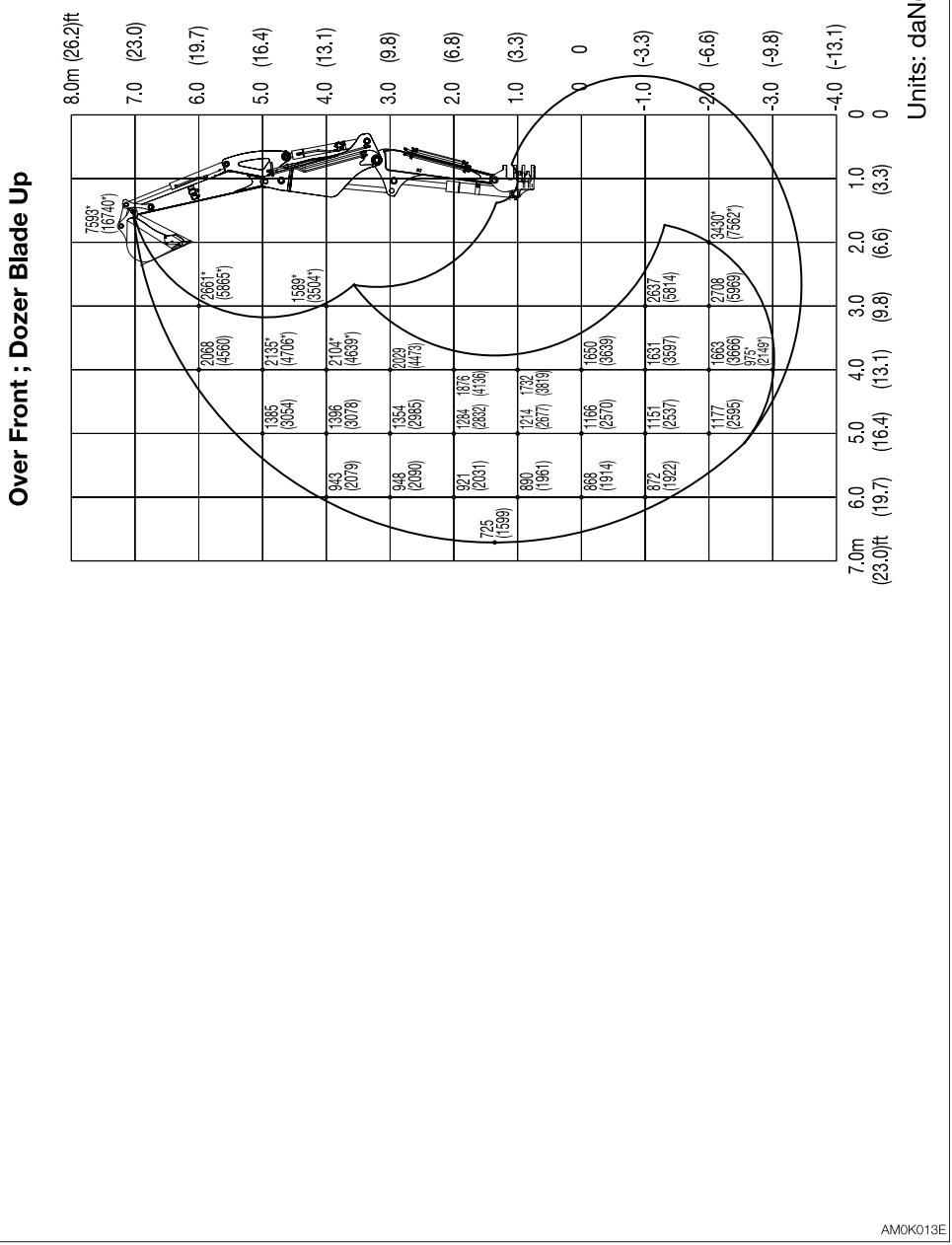

2-Piece boom Type B <TB290> Equipped with Extra weight

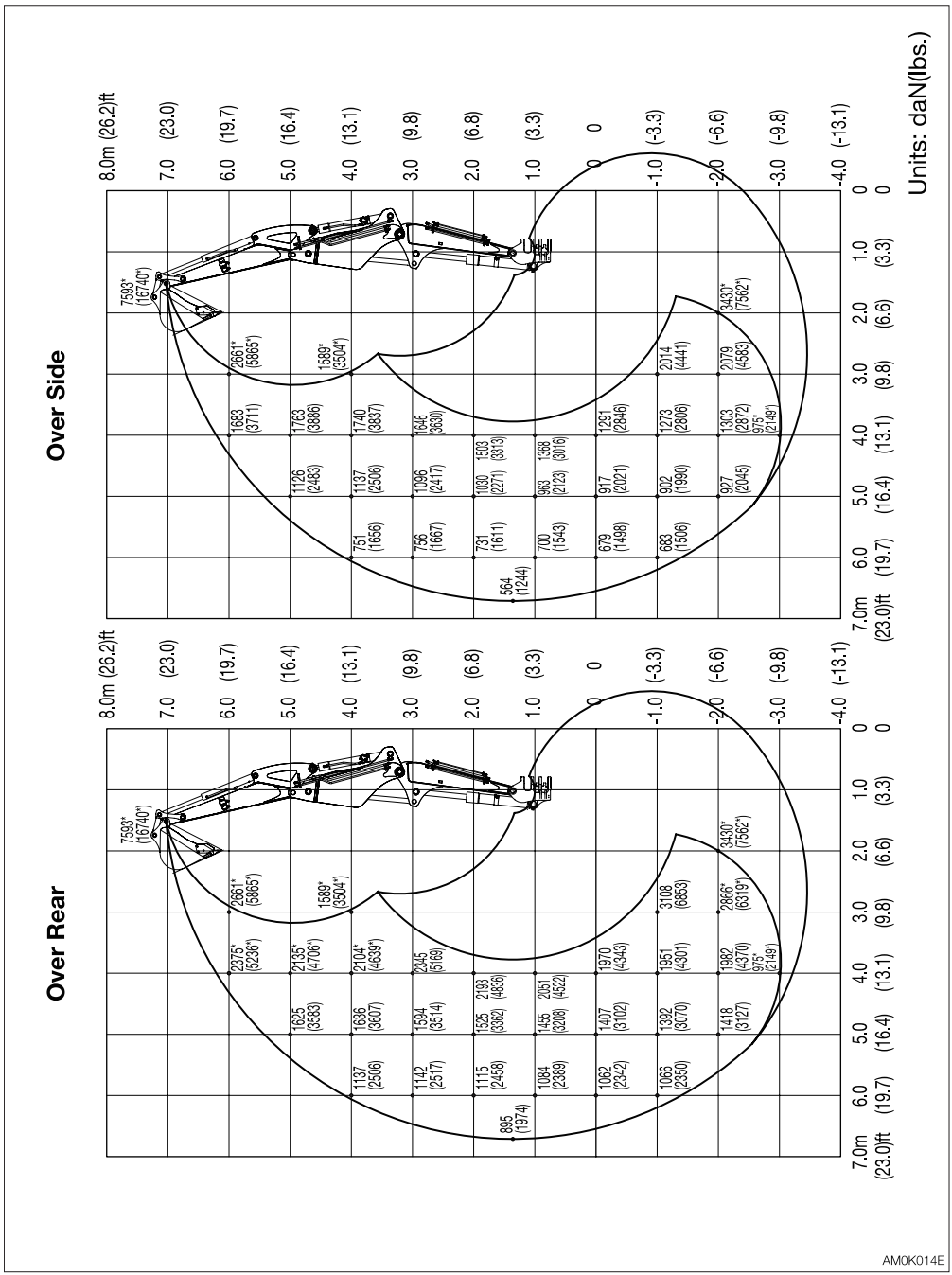

OPTIONS

GENERAL PRECAUTIONS

SAFETY PRECAUTIONS

⚠ WARNING

When removing or installing an attachment or optional part, take the following precautions.

- Consult with Takeuchi before installing an optional attachment.
- Do not use any attachments not approved by Takeuchi. Doing so may cause safety problems. Or, it may adversely affect the machine's operation or service life.
- We will not be held responsible for any injuries, accidents or damage to its products caused by the use by a non-approved attachment.
- Select a firm, level work area. Also, be sure to park in a well ventilated place.
- Clear obstacles and dangerous objects, and clean up spilled fuel immediately.
- When hoisting, be sure to designate a person to act as a signalman. Follow the instructions of the signalman regarding the procedure and measures.
- When it is necessary to temporally place a heavy object or an attachment on the ground during removal or installation, be sure to place it in a stable position.
- Keep everyone out of the area when hoisting. There is a hazard of objects falling or contacting with people in the area.
- Use a crane to move heavy objects (25 kg (55 lb.) or greater).
- Before removing a heavy object, be sure to put a support to it. When lifting with a crane, pay attention to the center of gravity of the load to keep the machine in balance.
- Do not operate the machine while the load is lifted by a crane stand.
- Use the proper procedure when mounting a boom or arm; otherwise serious damage could result. Consult your sales or service dealer for help.

CAUTIONS WHEN INSTALLING ATTACHMENTS

Be sure to perform a test operation after an optional or other special attachment has been replaced. Inspect the hydraulic oil level and recharge it as necessary. Consult your sales or service dealer for detailed procedures on installing/removing attachments.

CAUTIONS WHEN OPERATING ATTACHMENTS

⚠ WARNING

Long attachments reduce stability of the machine. The machine may tip over if it loses the balance when traveling or slewing on slopes.
Never perform the operations listed below as they are extremely dangerous.

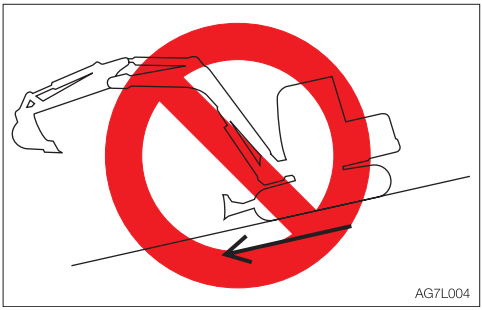

- Traveling down the slopes with the attachment raised



- Traveling across slopes

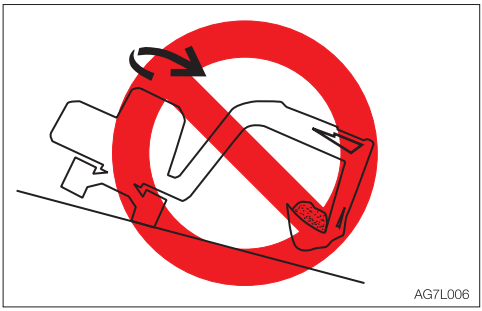

- Slewing on slopes
- If there is a heavy attachment is installed, the machine takes longer distance than usual to come to a complete stop when the stopping operation is performed. Carefully judge the distance so as not to bump into an object around the machine. Keep a safe distance from surrounding obstacles. When a heavy attachment is installed, natural drop (the gradual dropping of the attachment under its own weight when it is stopped in midair) increases.
- The machine can tip over more easily in the lateral direction than in the longitudinal direction.
  - Do not slew sideways with a heavy load at the how attachment. In particular, do not slew sideways on slopes.
  - The attachment is heavier for machines equipped with breakers or crushers than for machines equipped with the standard bucket. Do not operate such machines sideways, especially digging downhill.
- When a long arm is installed, the operating range increases. Carefully judge the distance so as not to bump into an object around the machine. Keep a safe distance from surrounding obstacles.

ATTACHMENT COMBINATION TABLE

The table below shows which bucket should be installed when the machine is using a standard arm, middle arm or long arm. Select a proper bucket by following the table.

⚠ WARNING

- **Consult with Takeuchi before installing an optional attachment.**
- **Do not use any attachments not approved by Takeuchi. Doing so may cause safety problems. Or, it may adversely affect the machine's operation or service life.**
- **We will not be held responsible for any injuries, accidents or damage to its products caused by the use by a non-approved attachment.**
- **The swing stopper must be installed when a bucket wider than a 750W (standard) bucket is installed. Failure to do so may result in the bucket hitting the machine body.**

√ :Can be used.
Δ :Can be used only for light operations (digging and loading of dry and loose soil or mud)
— :Cannot be used.
Total bucket mass = Bucket mass + Heaped bucket load (specific gravity: 1.8)

Bucket	Rated capacity m^3 (cu.yd.)	Bucket cutting width mm (inch)	Standard arm 1780 mm (70 in.)	Middle arm 1960 mm (77 in.)	Long arm 2130 mm (84 in.)
430W (no side cutter)	0.14 (0.18)	430 (16.9)	√	√	√
500 W	0.14 (0.18)	500 (19.7)	√	√	√
650 W	0.20 (0.26)	650 (25.6)	√	√	√
750 W (S.T.D.)	0.25 (0.33)	750 (29.5)	√	√	—
3-hole bucket	0.26 (0.34)	610 (24.0)	√	—	—
Total bucket mass= Within 657 kg (1448 lb.)		Within 750 (29.5)	√	—	—
Hydraulic Breaker (TKB-401)			√	—	—

SELECTING A LEVER PATTERN (I-H-M-K)

The operating pattern of the left and right operating levers can be changed.

⚠ WARNING

Before starting the engine, check the selector to see which operating pattern the left and right operating levers are set.

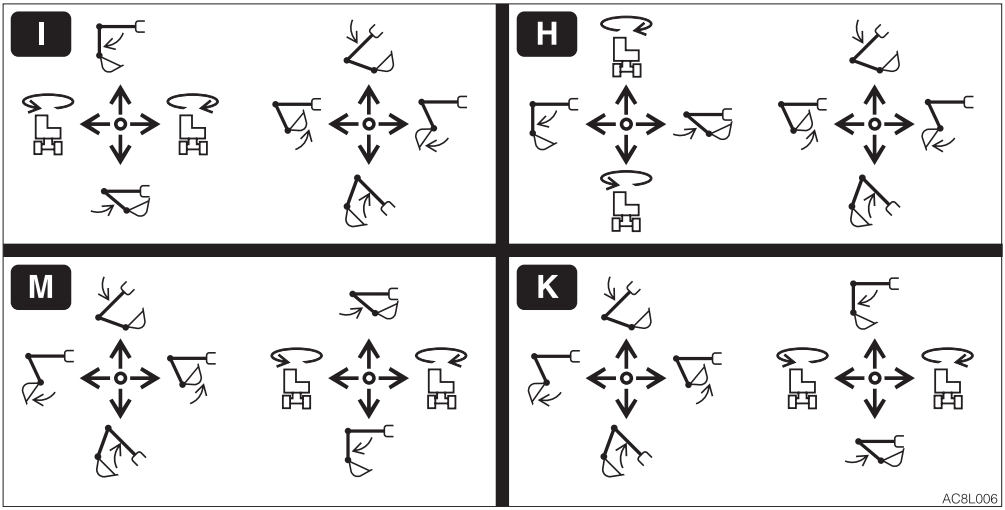

SWITCHING THE LEVER PATTERN

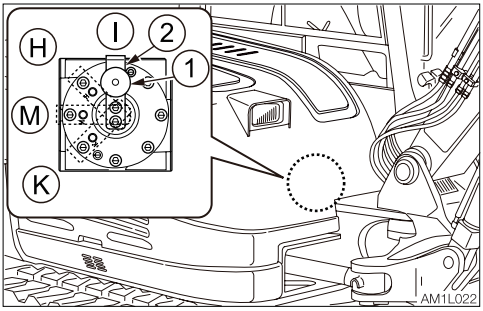

(I) : I pattern
(H) : H pattern
(M) : M pattern
(K) : K pattern

1. Park the machine on a flat and rigid ground, and stop the engine.
2. Open the side cover.
3. Pull out the knob (1).
4. Turn the selector valve lever (2) to switch the pattern.
5. Tighten the wing bolt (1) and fasten the lever (2) in place.
6. Close the side cover.
7. Confirm the lever pattern.

HYDRAULIC BREAKER

For handling of the breaker, read the hydraulic breaker's manual, provided separately.

IMPORTANT: When installing an attachment, make sure that it is appropriate for the machine being used. Contact your sales or service dealer for advice on selecting attachments.

CAUTIONS ON OPERATING

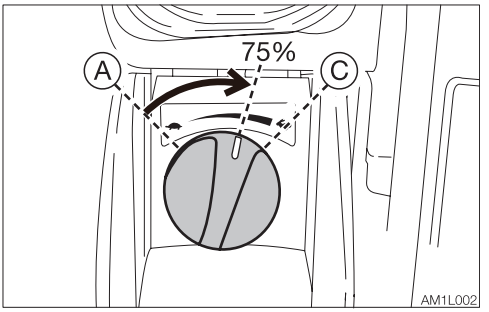

- Start the engine and run it at 75% of the maximum speed.

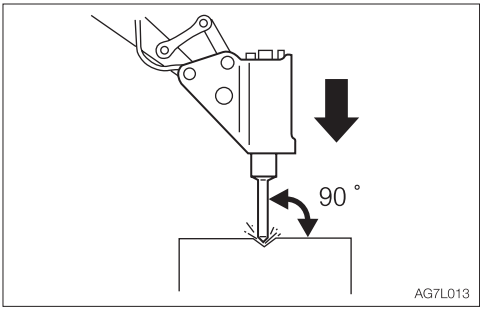

- Pound with the chisel pressed perpendicular to the surface to be pounded.
- When pounding, press the chisel properly against the object to be broken so as to avoid pounding the air.

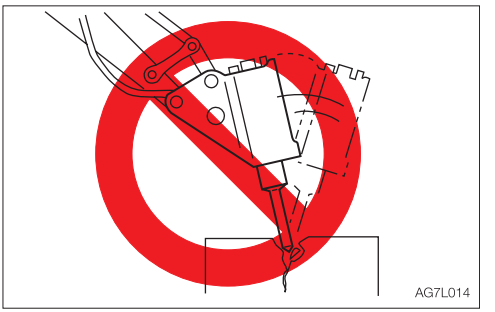

- Do not pry with the chisel or do not pry while pounding.
- Do not move the chisel while pounding.
- Do not pound continuously for over 30 seconds on the same surface.

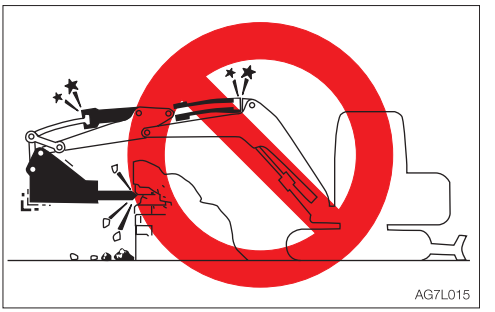

- Do not pound with the cylinder fully extended or retracted (at the stroke end). Leave a margin of at least 50mm(2 in).

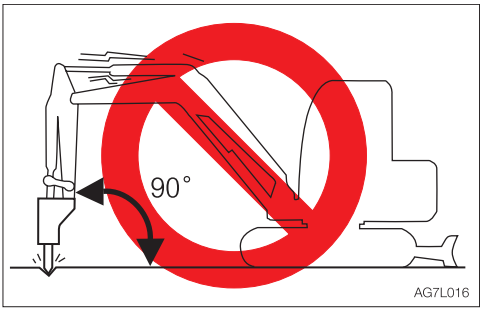

- Do not pound with the arm placed perpendicular to the ground surface.

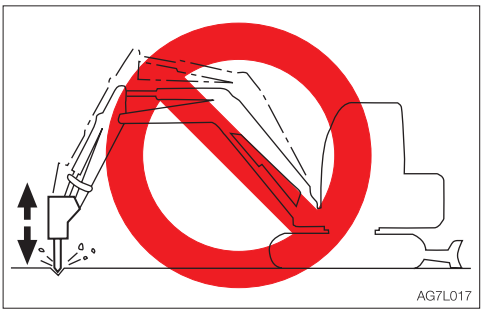

- Do not drop the breaker itself on the object to be broken in order to break it.
- Do not move objects to be broken or rocks with the breaker itself.
- Slew the machine occasionally to cool the engine.
- If a hydraulic hose is vibrating abnormally, nitrogen gas may be leaking from the accumulator. Ask for an inspection early.

REPLACING THE HYDRAULIC OIL REGULARLY

When a hydraulic breaker is used, the oil deteriorates more quickly than that used for a usual operation. Be sure to replace the hydraulic oil and the return filter elements.

- Failure to replace these in time can lead to damage to the machine and the breaker hydraulic system. To improve the service life of the hydraulic systems, be sure to replace the hydraulic oil and return filter element after the number of hours shown on the diagram below.
- When replacing the hydraulic oil, clean the suction strainer.

Replacement interval (hours)

Item	Hydraulic oil	Filter element
1st time	—	25
2nd time	—	100
Periodically	1200 (600)	200

When the breaker operating ratio is 100%.

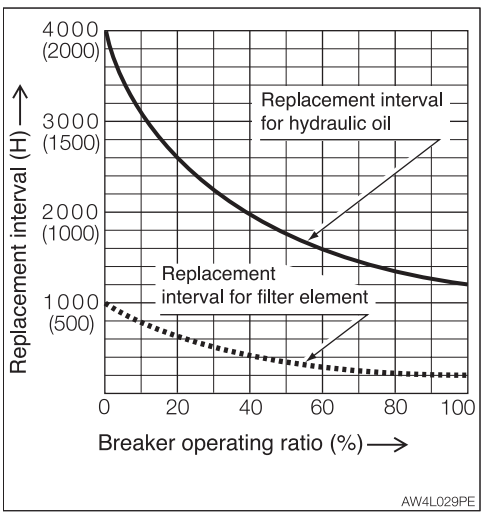

( ): When using conventional antiwear hydraulic oil.

TRAVEL ALARM

The alarm sounds while the machine is traveling and stops when the machine stops traveling.
If the alarm does not sound when the machine travels, the fuse may be blown. Inspect the fuses.

⚠ WARNING

If the fuse blows again soon after replacement, then the electric system is likely faulty. It may pose a fire hazard if not properly repaired. Contact your sales or service dealer for advice.

1. Turn the starter key to the OFF position to stop the engine.

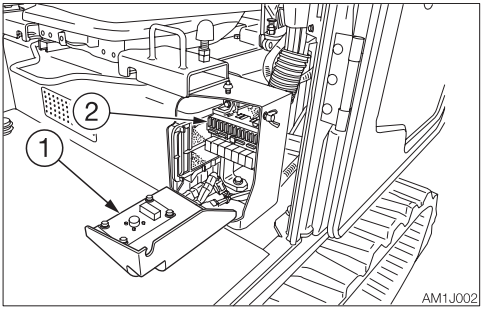

2. Open the fuse box cover (1).
3. Check for any blown fuses (2).

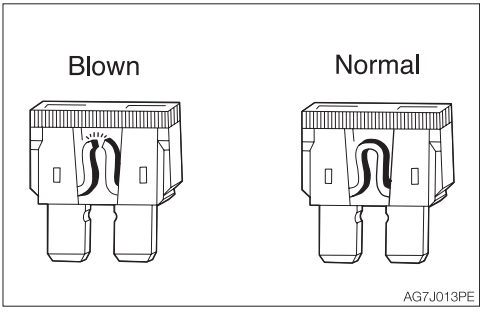

4. If a fuse is blown, replace it with a spare fuse of the same capacity.

Fuse layout and circuits protected

Capacity	Protected circuit	Capacity	Protected circuit
15A	ECM (ACC)	**25A**	Light
10A	Starter switch (C)	**10A**	Wiper
5A	Controller (B)	**25A**	Solenoid
10A	Horn, interior light	**10A**	Controller (ACC)
		20A	Cigarette lighter, radio, beacon lamp
		10A	**Travel alarm**, alarm
		25A	Air conditioner blower
		10A	Air conditioner compressor
		5A	Air conditioner controller
		25A	Option (1)
		15A	Option (2)
		25A	Option (3)

OPTIONAL EQUIPMENT MASS

Standard machine mass kg (lb.) (Not including operator)		TB285	TB290
		Rubber crawlers	Rubber crawlers
		8390 (18495)	8440 (18605)
OPTION			
Steel crawler, 450-mm width		235 (520)	
Steel crawler, 550-mm width		356 (785)	
Segmental rubber crawler		266 (585)	
Shoe guide		18 (40)	
Center guide		21 (46)	
Step		6 (15)	
Wide width blade		7 (15)	
Angle blade		150 (330)	
Lightweight weight		–238 (–525)	
Air suspension seat		19 (40)	
Middle arm		15 (35)	
Long arm		29 (65)	
Long arm (With thumb bracket)		35 (75)	
Arm emergency shut-off valve		4 (10)	
Auxiliary hydraulic lines	Auxiliary 3rd	17 (35)	
	Auxiliary 3rd + Auxiliary 4th.	32 (70)	
Dozer blade with float		5 (10)	
Roof guard (Level 2: ISO 10262)		55 (120)	
Front guard (Level 2: ISO 10262)		60 (130)	

Units: kg (lb)

*: Mass of optional equipment is added to the standard machine mass.
*: This table only contains the optional equipment of 10kg (20lb) or more in mass.

BIODEGRADABLE OIL

Biodegradable oil is a new type of hydraulic oil that is decomposed into carbon dioxide and water by microorganisms in the soil and water. It is highly safe for living organisms and offers advantages in term of environmental protection.

- Recommended biodegradable oil: Mobile EAL Envirosyn 46H (an ester synthetic oil) and Panolin HLP Synth 46 (an ester synthetic oil).
  When replacing the mineral oil with biodegradable oil, use either of the above brand oil.
  Note that there are oils of other brands, even among ester synthetic oils, which may damage O-rings, packings and seals.
- When switching from a mineral oil to a biodegradable oil, the parking brake torque decreases by about 30%.

REPLACING THE MINERAL OIL WITH BIODEGRADABLE OIL

- A mixture of mineral oil and biodegradable oil or a mixture of different brands of biodegradable oils will result in a decrease in performance of the hydraulic oil, biodegradability and safety. The inside of the hydraulic oil system must be flushed (cleaned) before replacing. The residual mineral oil in the machine should be about 2% or less, as complying with the ISO 15380.
- This operation is dangerous and requires experience. Ask a Takeuchi sales or service dealer for help.

Flushing

To be performed by a Takeuchi sales or service outlet

1. Drain the hydraulic oil (mineral oil) from the hydraulic oil tank and clean the inside of the tank and suction strainer.
   Refer to “Replacing the hydraulic oil and cleaning the suction strainer” on page 5-57.
2. Remove the cylinder hoses and drain the hydraulic oil (mineral oil) from inside the cylinders.
3. Supply new biodegradable oil to the hydraulic oil tank.
4. Bleed the air from the hydraulic oil system.
5. Operate the hydraulic devices for 30 minutes.
6. Drain the biodegradable oil from the tank and cylinders.
7. Replace the hydraulic oil return filter with a new filter.
8. Repeat steps 3 and 4.
9. Operate the hydraulic devices for 30 minutes.
10. Drain the biodegradable oil from the tank and cylinders.
11. Repeat steps 3 and 4.
12. Operate the hydraulic devices for 1 hour.
13. Drain the biodegradable oil from the tank and cylinders.
14. Replace the return filter with a new filter.
15. Repeat steps 3 and 4.
16. Operate the hydraulic devices, then check for oil leakage.

There is no need to flush the hydraulic oil system when switching from biodegradable to mineral hydraulic oil.

CAB OPTIONS

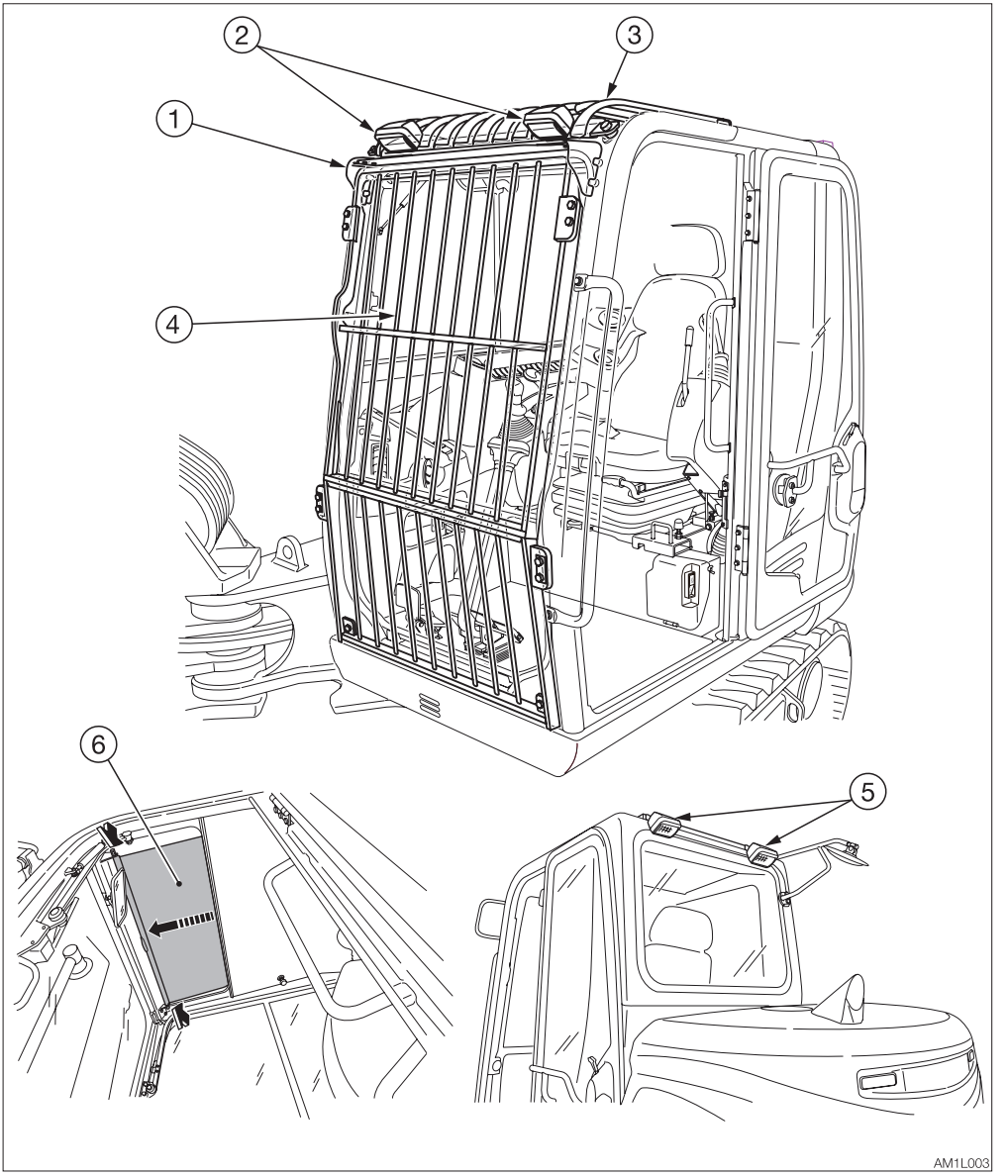

1. Rain guard
2. Front light
3. Roof guard (Level 2: ISO 10262)
4. Front guard (Level 2: ISO 10262)
5. Rear light
6. Sun shade

ANGLE DOZER BLADE

⚠ WARNING

- **Do not press the float button while the machine is raised by the dozer blade. Doing so will cause the machine to fall. If you must work beneath the raised machine, always use a secure support to keep the machine raised.**
- **Do not press the float button while the dozer blade is raised. Doing so will cause the dozer blade to fall. Lower the dozer blade to the ground before pressing the float button.**
- **Do not travel forward while the dozer blade is in the float mode.**

IMPORTANT: Do not raise the machine by using the angled dozer blade. Or, the dozer blade may be damaged due to the load concentrated onto a point on the dozer blade.

This dozer blade can be angled (to 25° right or left). Also, it can be used in the float mode.

Angle operation

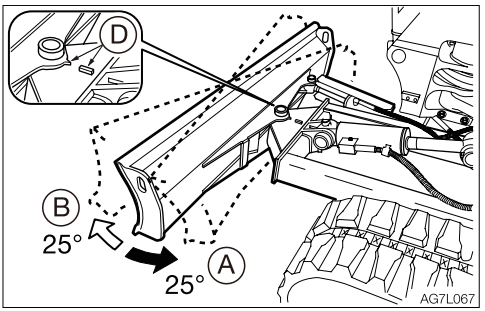

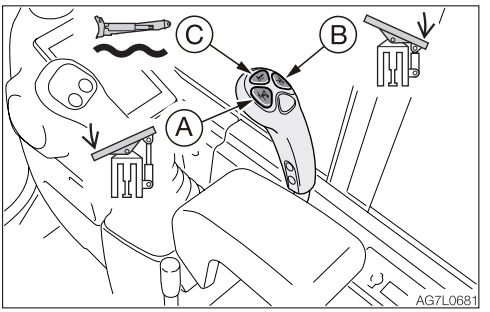

Button (A) .....Left angle (0 to 25°)
Button (B) .....Right angle (0 to 25°)
The dozer blade angle is increased/decreased between 0 and 25° as long as the button is pressed.
To position the dozer blade at a right angle, align the matching marks (D) as shown in the figure.

Float operation

Button (C).....Float mode
To cancel the float mode, press the button again.

Daily inspection (every 10 hours)
Lubricating

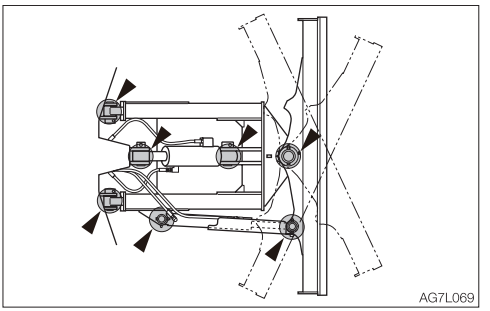

1. Lower the working equipment to the ground and stop the engine.
2. Use the grease gun to lubricate the grease fitting.
3. Wipe off the excess grease.

OPERATING LEVER SWITCH KIT 1

HORN BUTTON

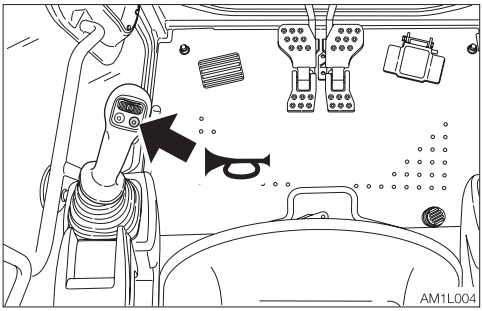

Press the button situated on the left operating lever to blow the horn.

DECELERATION BUTTON

⚠ WARNING

Before operating the deceleration button, set the operating lever to the neutral position and take your foot off the pedals. If the deceleration button is pressed while driving, the machine's operating speed will abruptly change to result in a dangerous situation.

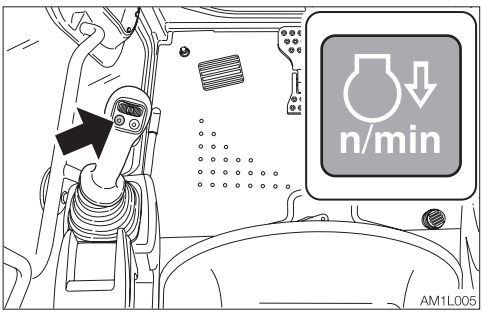

Press this button on the left operating lever to lower the engine speed to low idling. Press the button again to return to the engine speed set with the throttle controller. For safety reasons, it is designed that the deceleration function is activated to set the engine revolutions to low idling whenever the engine is started.
Cancel the deceleration mode by pressing the deceleration button as necessary.

Note: This deceleration button is capable of decreasing the engine speed and reducing the fuel consumption, with a simple operation, in a situation such as when little engine output is required and thus the operating or the travel levers are in neutral.

TRAVEL SPEED BUTTON

⚠ WARNING

When a load greater than a set value is applied during traveling in 2nd (high) speed, the speed will automatically slow down to 1st (low) speed. When the load becomes lighter, the speed will increase and return to 2nd (high) speed. It should be noted that the travel speed changes depending on the load condition (for machines with the automatic travel shift-down system).

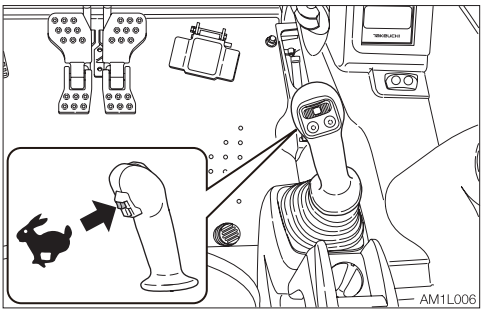

Press this switch to set the travel speed to 2nd (high) speed. Press it again to return to 1st (low) speed.

AUXILIARY 1ST SWITCHES

Auxiliary hydraulic buttons

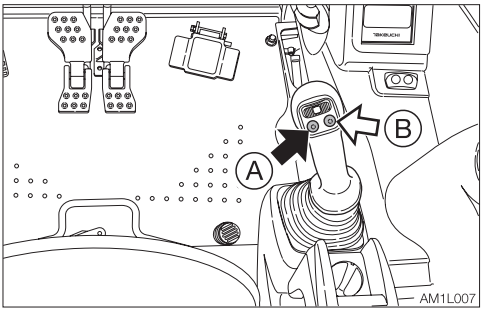

Press those buttons to control the flow of the oil in the first auxiliary hydraulic lines.
- Proportional control of the auxiliary hydraulic circuit is not possible.

(A).....Hydraulic oil flows to the left auxiliary line (a).
(B) .....Hydraulic oil flows to the right auxiliary line (b).

Slider switch (Proportional control)

Proportional control allows for slow-to-fast/ fast-to-slow movement of attachment.
Example: If you move the slider switch half way, the attachment will move at approximately one-half the speed.

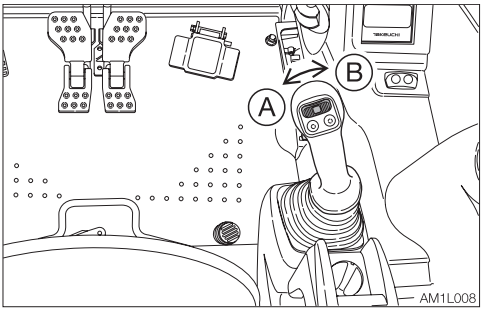

Move this switch to control the flow of the oil in the first auxiliary hydraulic lines.
(A).....Hydraulic oil flows to the left auxiliary line (a).
(B) .....Hydraulic oil flows to the right auxiliary line (b).

Refer to “Auxiliary hydraulic lines” on page 2-48 to 2-52.

AUXILIARY 2ND/4TH SWITCH

Slider switch (Proportional control)

Proportional control allows for slow-to-fast/ fast-to-slow movement of attachment.
Example: If you move the slider switch half way, the attachment will move at approximately one-half the speed.

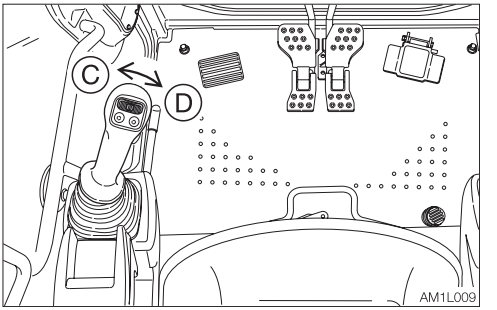

Move this switch to control the flow of the oil in the second auxiliary hydraulic lines.
(C): .....Hydraulic oil flows to the left auxiliary line (c).
(D): .....Hydraulic oil flows to the right auxiliary line (d).

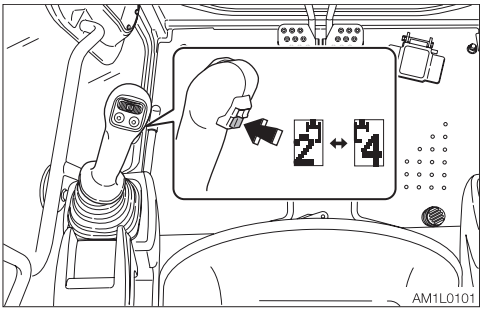

To use the auxiliary 4th hydraulic line, press the auxiliary 2/4 select button to change to the operation of the auxiliary 4th.
Refer to “Auxiliary hydraulic lines” on page 2-48 to 2-52.

AUXILIARY 2/4 SELECT BUTTON

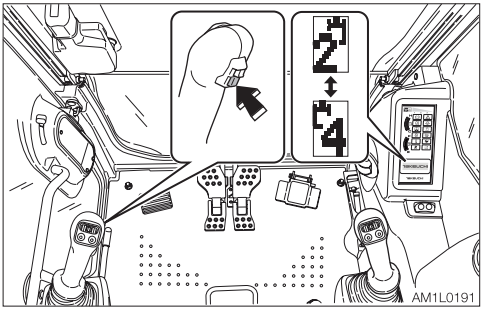

This switch is used to change from the second auxiliary operation to the fourth auxiliary operation.
Pressing this button displays the second auxiliary on the LCD to indicate that the second auxiliary operation is enabled.
Pressing this button again displays the auxiliary 4th on the LCD to indicate that the auxiliary 4th operation is enabled.
The actual operation is performed with the auxiliary 2nd/4th switch (slider switch).

SWING/SECOND BOOM SELECT BUTTON

⚠ WARNING

Pressing (switching ON or OFF) the selector button while the boom swing pedal is depressed is dangerous, since the attachment will move unexpectedly. Always set the boom swing pedal back to the neutral position before operating the selector button.

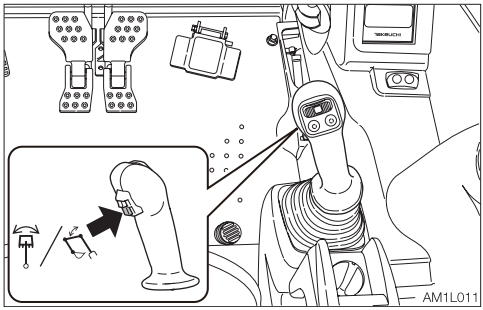

This button changes from the boom swing operation to the second boom operation. Press this button to change over to operation of the second boom. The second boom operation indicator lamp will light. One more press of this button will result in a return to boom swing operation. Actual operation is performed with the boom swing pedal.

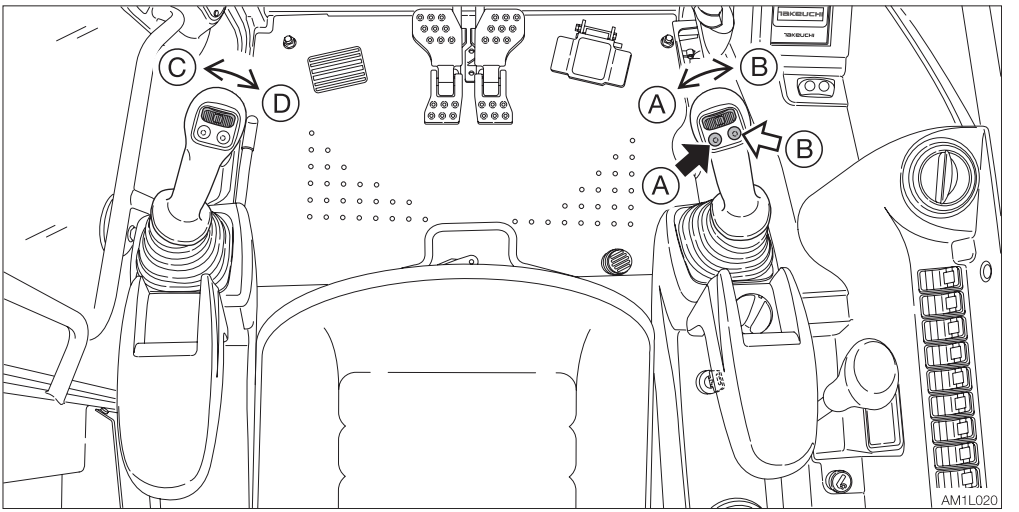

Operating

Press those buttons to control the flow of the oil in the first/second auxiliary hydraulic lines.

(A).....Hydraulic oil flows to left auxiliary line (a).

(B) .....Hydraulic oil flows to right auxiliary line (b).

(C) .....Hydraulic oil flows to left auxiliary line (c).

(D) .....Hydraulic oil flows to right auxiliary line (d).

Refer to “Auxiliary hydraulic lines” on page 2-48 to 2-52.

Releasing the residual pressure

After the auxiliary hydraulic circuits have been used, pressure remains in the circuits. This is called the residual pressure. Release this residual pressure before disconnecting the lines.

Perform the residual pressure releasing within 10 minutes after the engine stopping.

1. Park the machine on a flat, rigid and safe ground.
2. Stop the engine.
3. Lower the safety lock lever to the unlocked position.
4. Turn the starter switch to the ON position.
5. Press the auxiliary hydraulic switches several times to release the residual pressure in the auxiliary hydraulic circuitry.

First Published March 2011
Nineteenth Published November 2021

AM1EN018

OPERATOR'S MANUAL

TB285
TB290 Hydraulic excavator

Edited and issued by TAKEUCHI MFG. CO., LTD.

Printed in Japan by STATION M Co., Ltd.

CALIFORNIA

PROPOSITION 65 WARNING

Diesel engine exhaust and some of its constituents are known to the State of California to cause cancer, birth defects, and other reproductive harm.
Battery posts, terminals and related accessories contain lead and lead compounds, chemicals known to the State of California to cause cancer and birth defects or other reproductive harm. Wash hands after handling battery.

Declaration of Conformity

We herewith declare that following named machine, based on its conception and design and in the form brought into service is in accordance with the relevant, basic safety and health requirements of the following EU directives. In case of any alteration of the machine not coordinated with us, this certificate loses its validity.

Designation of the machine	Hydraulic Excavator
Manufacturer	TAKEUCHI MFG. CO., LTD 205 Uwadaira, Sakaki-machi, Hanishina-gun, Nagano 389-0605, Japan

Model	TB285
Engine type	3TTWS (e13*97/68JA*2006/105*0761*Δ)
Engine power	51.6 kW @ 2000 rpm

The machine is in accordance with the requirements of EU directives:
1) Machine directive 2006/42/EC and appendix
2) Electromagnetic compatibility-regulation 2014/30/EU and appendix
3) Noise directive 2000/14/EC (Evaluation procedure according to appendix VI), 2005/88/EC and appendices.
4) Regulations on engine emissions: 97/68/EC as last amended by Directive 2006/105/EC

Harmonized norms: EN474-1:2006+A5:2018, EN474-5:2006+A3:2013.

Compiler of the technical files:
Daniel Bailli
Parc d'Activités des Béthunes
3, avenue de la Mare 95310 SAINT OUEN L'AUMONE
CS 29258 – SOA

Issued in Sakaki, Japan
Akio Takeuchi, Chairman

CALIFORNIA

PROPOSITION 65 WARNING

Diesel engine exhaust and some of its constituents are known to the State of California to cause cancer, birth defects, and other reproductive harm.
Battery posts, terminals and related accessories contain lead and lead compounds, chemicals known to the State of California to cause cancer and birth defects or other reproductive harm. Wash hands after handling battery.

Declaration of Conformity

We herewith declare that following named machine, based on its conception and design and in the form brought into service is in accordance with the relevant, basic safety and health requirements of the following EU directives. In case of any alteration of the machine not coordinated with us, this certificate loses its validity.

Designation of the machine	Hydraulic Excavator
Manufacturer	TAKEUCHI MFG. CO., LTD 205 Uwadaira, Sakaki-machi, Hanishina-gun, Nagano 389-0605, Japan

Model	TB290
Engine type	AU-4JJ1TYSB-03
Engine power	54 kW @ 2000 rpm

The machine is in accordance with the requirements of EU directives:
1) Machine directive 2006/42/EC and appendix
2) Electromagnetic compatibility-regulation 2014/30/EU and appendix
3) Noise directive 2000/14/EC (Evaluation procedure according to appendix VI), 2005/88/EC and appendices.
4) Regulations on engine emissions: 2004/26/EC and appendices.

Harmonized norms: EN474-1:2006+A1:2009, EN474-5:2006+A2:2012.

Compiler of the technical files:
Oliver Scharschmidt
Wilhelm Schäfer GmbH
68307 Mannheim-Sandhofen GERMANY

Issued in Sakaki, Japan
Akio Takeuchi, Chairman