# OPERATOR'S MANUAL

Original instructions

# TB290

Serial No. 185107312~

Book No. AM3EN029

OENTB290_I-Xd

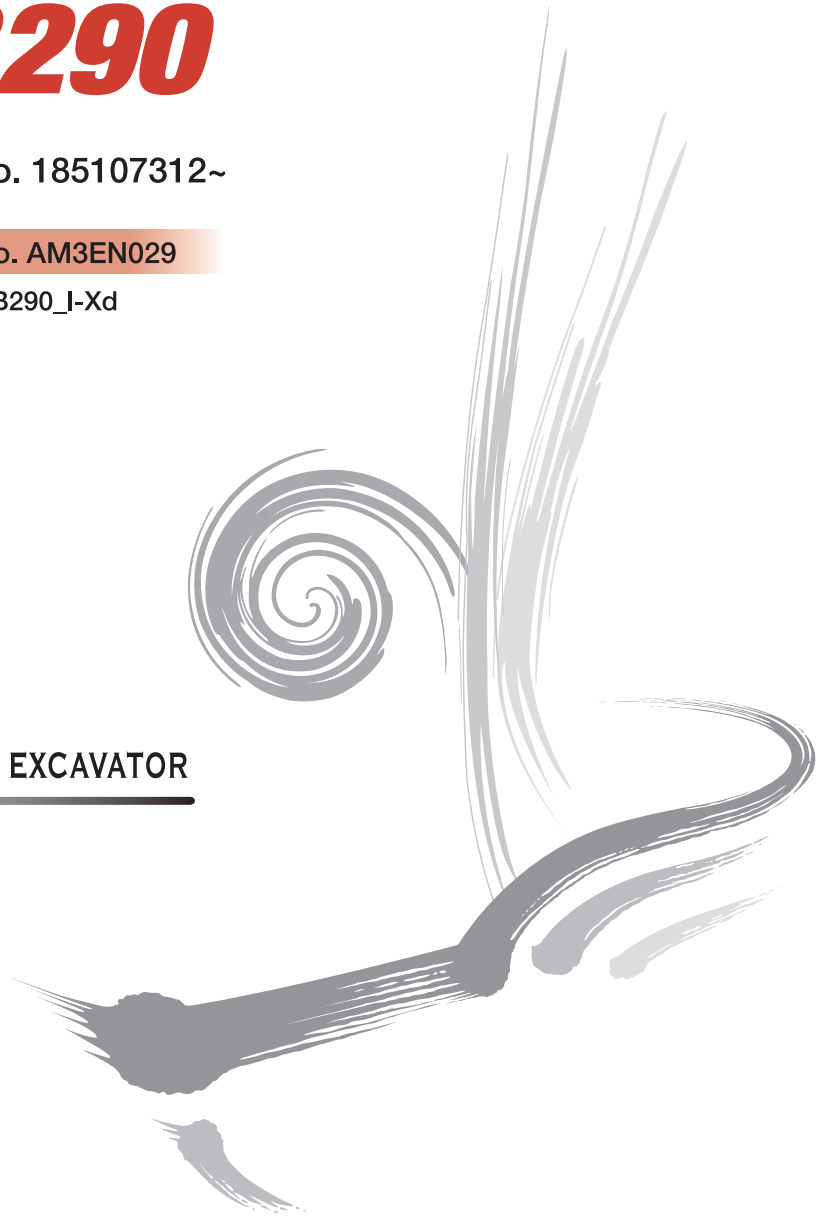

HYDRAULIC EXCAVATOR

TAKEUCHI

**WARNING** Read and understand these instructions.
Failure to do so can cause injury or death.

05692-00072

# SAFETY ALERT SYMBOL




**This symbol represents the safety alert. The message that follows the symbol contains important information about safety.**
**Read and understand the message to avoid personal injury or death.**

**It is the owner or employer's responsibility to fully instruct each operator in the proper and safe operation of all equipment. All persons using this machine should thoroughly familiarize themselves with the contents of this manual.**

**All operators must be instructed on the proper functions of the excavator before running the machine.**

**Learn and practice correct use of the machine controls in a safe, clear area before operating this machine on a job site.**

**⚠ WARNING**

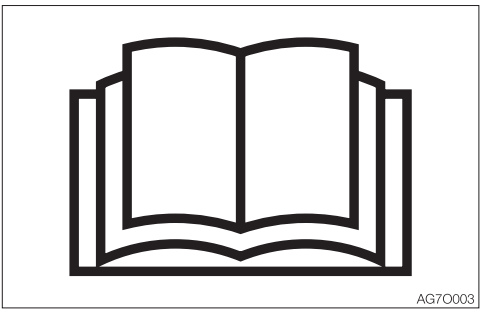


**Improper operation, inspection and maintenance of this machine can cause injury or death.**
**Read and understand this manual before performing any operation, inspection or maintenance on this machine.**

Always store this manual near at hand preferably on the machine itself. If it should be lost or damaged, immediately order a new one from your Takeuchi dealer.
When transferring ownership of this machine, be sure to hand this manual to the next owner.

Takeuchi supplies machines complying with the local regulations and standards of the country of export. If your machine has been purchased in another country or from a person or company of another country, it may not have the safety devices or safety standards required for use in your country. Should you have any question about whether your machine complies with the regulations and standards of your country, contact a Takeuchi dealer.

## SIGNAL WORDS

Safety messages appearing in this manual and on machine decals are identified by the words “DANGER”, “WARNING” and “CAUTION”. These signal words mean the following:

**⚠ DANGER**

**DANGER indicates a hazard with a high level of risk which, if not avoided, will result in death or serious injury.**

**⚠ WARNING**

**WARNING indicates a hazard with a medium level of risk which, if not avoided, could result in death or serious injury.**

**⚠ CAUTION**

**CAUTION indicates a hazard with a low level of risk which, if not avoided, could result in minor moderate injury.**

**IMPORTANT: The word IMPORTANT is used to alert operators and maintenance personnel about situations which could result in damage to the machine and its components.**

It is impossible to foresee every possible circumstance that might involve a potential hazard. The warnings in this manual or on the machine can not cover all possible contingencies. You must exercise all due care and follow normal safety procedures when operating the machine so as to ensure that no damage occurs to the machine, its operators or other persons.

# INTRODUCTION

## FOREWORD

This manual describes operation, inspection and maintenance of the machine, as well as safety instructions to be heeded during these operations.
If you have any questions about the machine, please contact a Takeuchi sales or service outlet.

- Some details in this manual may differ from those provided in the machine you are using.
- Please note that the information and specifications in this manual are subject to change without prior notice.

## MANUAL STORAGE COMPARTMENT

A compartment for storing this manual is provided at the position shown on the diagram below.

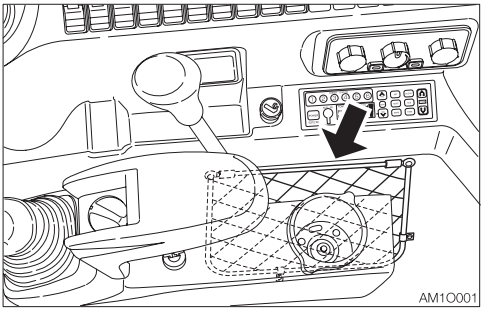


1. After using the manual, place it in the plastic pouch and store it back in the manual storage compartment.

## SERIAL NUMBERS

**IMPORTANT: Do not remove the machine name plate with the serial number. Check the serial numbers of the machine and engine and write them down in the spaces below.**

**Machine number:**

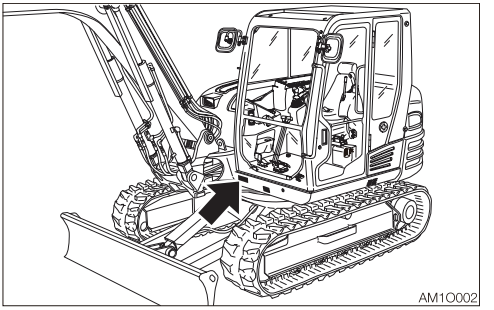


**Engine number:**

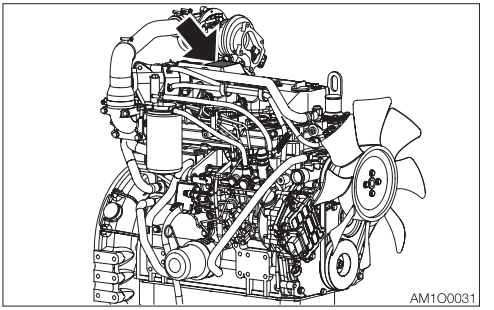

# MACHINE DESCRIPTION

## FRONT, REAR, LEFT AND RIGHT

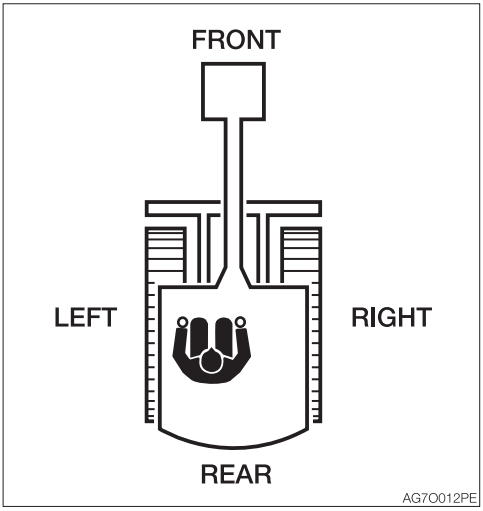


This manual refers the front, rear, left and right of the machine as seen when sitting in the operator's seat with the dozer blade visible to the front.

## DESIGNATED OPERATIONS

Use this machine primarily for the following operations:
- Excavation
- Digging ditches
- Digging side ditches
- Leveling
- Loading

## FEATURES

- Hydromounted cab minimizes vibration
- Automatic travel shift-down system
- Self-adjusting shoe tension system
- Short pitch rubber crawler
- Low engine noise and exhaust emissions
- Electronic control of auxiliary hydraulic circuit
- Automatic and manual operation for engine deceleration
- Engine emergency stop system

## BREAK-IN PERIOD

When the machine is new, operate the machine for the first 100 hours (as indicated on the hour meter) by following the instructions below.
Using a new machine without a break-in period will lead to quicker deterioration of machine performance and may shorten the machine's service life.
- Sufficiently warm up the engine and hydraulic oil.
- Avoid heavy loads and rapid operations. Operate with a load of about 80% the maximum load.
- Do not abruptly start up, accelerate, change directions, or stop unless necessary.

# NOTES ON READING THIS MANUAL

Please note that the descriptions and diagrams included in this manual may not be applicable to your machine.
The numbers used in the illustration are with circles around them. The same numbers appear between the parentheses in the text.
(Example: ① → (1))

Symbols used in this manual
The symbols used in this manual have the following meanings.
⃠, ✕ ..... Prohibition
..... Lock
..... Unlock

# CONTENTS


**Introduction ..... 0-2**

**Machine description ..... 0-3**

**Safety ..... 1-1**

General precautions ..... 1-2
Precautions when preparing ..... 1-8
Precautions when starting ..... 1-12
Precautions when operating ..... 1-14
Precautions when stopping ..... 1-23
Precautions when transporting ..... 1-24
Precautions on maintenance ..... 1-26
Safety signs (decals) ..... 1-35

**Controls ..... 2-1**

Names of components ..... 2-2
Covers ..... 2-4
- Starter key ..... 2-4
- Side cover ..... 2-4
- Fuel lid ..... 2-5
- Fuel filler port ..... 2-5
- Engine hood ..... 2-6
- Fuse box cover ..... 2-6

Cab ..... 2-7
- Cab door ..... 2-7
- Emergency exit ..... 2-7
- Front window ..... 2-8
- Lower front window ..... 2-9
- Side window ..... 2-10
- Sun shade ..... 2-10
- Emergency hammer (optional) ..... 2-10

Seat and seat belt ..... 2-11
- Seat ..... 2-11
- Seat belt ..... 2-13
- Air Suspension Seat ..... 2-14

Multi-information display ..... 2-18
- Home screen ..... 2-18
- Warning lamps ..... 2-19
- Indicators ..... 2-20
- Screen control key ..... 2-25
- Screen navigation ..... 2-27
- Switching images ..... 2-36

Switches ..... 2-37
- Starter switch ..... 2-37
- Engine shutdown switch ..... 2-37
- Throttle controller ..... 2-37
- Horn button ..... 2-38
- Deceleration button ..... 2-38
- Travel speed button ..... 2-38
- Auxiliary 1st switches ..... 2-39
- Auxiliary 2nd/4th switch (If equipped) ..... 2-39
- Swing/Second boom select button ..... 2-40
- Third auxiliary hydraulic switch and button (If equipped) ..... 2-40
- Auxiliary 2/4 select button (If equipped) ..... 2-40
- Third auxiliary hard-lock switch (If equipped) ..... 2-40
- DPF manual regeneration/inhibit select switch ..... 2-41
- Light switch ..... 2-42
- Wiper switch ..... 2-43
- Washer switch ..... 2-43
- Automatic deceleration switch ..... 2-43
- ECO/Highland mode switch ..... 2-44
- Detent mode switch (Auxiliary 1st) ..... 2-44
- Auxiliary 1st auto tank switch (If equipped) ..... 2-45
- Lift overload warning switch ..... 2-45
- Beacon lamp switch ..... 2-45

Levers and Pedals ..... 2-46
- Safety lock lever ..... 2-46
- Operating levers ..... 2-46
- Blade lever ..... 2-47
- Travel levers/pedals ..... 2-48
- Boom swing/Second boom pedal ..... 2-48

Accessories ..... 2-49
- Air conditioner ..... 2-49
- Cup holder ..... 2-54
- Cigarette lighter ..... 2-55
- Ashtray ..... 2-55
- Interior light ..... 2-56
- External power sockets ..... 2-57
- Radio ..... 2-58
- Auxiliary hydraulic lines ..... 2-70
- Operating the machine with an accumulator ..... 2-76
- Lifting safety device (If equipped) ..... 2-77
- Fuel Supply Pump (If equipped) ..... 2-79
- Engine auto stop ..... 2-79
- Mirrors ..... 2-80
- Camera (If equipped) ..... 2-82

**Operation ..... 3-1**

Before starting operation ..... 3-2
- Getting on or off the machine ..... 3-2
- Walk-around inspection ..... 3-2
- Daily inspection ..... 3-2

Starting and stopping the engine ..... 3-3

Before starting the engine ..... 3-3
Starting the Engine ..... 3-4
Warming up the engine ..... 3-6
Stopping the engine ..... 3-6
Operating the machine ..... 3-8
Lever pattern (ISO pattern) ..... 3-8
Lever pattern (G pattern) (If equipped) .. 3-9
Warming up the machine (hydraulic oil) ..... 3-10
Inspection after warm-up ..... 3-11
Operating the travel levers/pedals ..... 3-12
Stopping travel ..... 3-15
Operating the working equipment ..... 3-16
Operating procedures ..... 3-18
Prohibited operations ..... 3-18
Cautions on operating ..... 3-21
Cautions on traveling on slopes ..... 3-22
Getting out of mud ..... 3-24
Operations possible with this machine ..... 3-24
Parking the machine ..... 3-26
Parking ..... 3-26
Inspection and checks after stopping the engine ..... 3-26
Handling in cold climates ..... 3-27
Preparing for cold climates ..... 3-27
Cautions after operations ..... 3-27
After the cold climate ..... 3-27
Handling rubber crawlers ..... 3-28
Prohibitions ..... 3-28
Cautions ..... 3-29
Preventing the rubber crawlers from coming off ..... 3-29
Handling the engine ..... 3-31
Prohibitions ..... 3-31
Cautions ..... 3-31
Diesel fuel ..... 3-31

**Transport ..... 4-1**

Loading and unloading ..... 4-2
Hoisting the machine ..... 4-4
Securing the machine ..... 4-6

**Maintenance ..... 5-1**

General ..... 5-2
Maintenance overview ..... 5-2
Cautions on maintenance ..... 5-2
Service data ..... 5-4
Fuel and lubricant table ..... 5-4
Regularly replace the hydraulic oil ..... 5-8
List of consumables ..... 5-9
List of tools (If equipped) ..... 5-10
List of tightening torques ..... 5-11
Safety-critical parts ..... 5-12
Maintenance list ..... 5-14
Walk-around inspection ..... 5-16
Inspecting by opening the engine hood and covers ..... 5-16
Inspecting by walking around the machine ..... 5-17
Inspecting while sitting in the operator's seat ..... 5-17
Daily inspection (every 10 hours) ..... 5-18
Inspecting and replenishing the coolant ..... 5-18
Inspecting and replenishing the engine oil ..... 5-19
Inspecting the water separator ..... 5-20
Inspecting the fuel level ..... 5-21
Inspecting the hydraulic oil tank level and replenishing ..... 5-22
Lubricating the working equipment ..... 5-23
After the initial 50 hours (only for new machines) ..... 5-24
Inspecting and adjusting the fan belt .. 5-24
Inspecting and adjusting the compressor belt (AC) ..... 5-26
Every 50 hours ..... 5-28
Inspecting the crawler belt tension ..... 5-28
Lubricating the slew bearing ..... 5-28
Draining the water from the fuel tank .. 5-29
Inspecting the battery fluid level and replenishing ..... 5-30
After the initial 250 hours (only for new machines) ..... 5-32
Replacing the hydraulic oil return filter ..... 5-32
Replacing the pilot line filter ..... 5-33
Replacing the travel motor gear oil ..... 5-34
Every 250 hours ..... 5-35
Inspecting and adjusting the fan belt .. 5-35
Inspecting and adjusting the compressor belt (AC) ..... 5-35
Replacing the engine oil and the oil filter ..... 5-36
Cleaning the air cleaner ..... 5-38
Cleaning the radiator fins and the oil cooler fins ..... 5-39
Cleaning the air filters (AC) ..... 5-40
Cleaning the condenser (AC) ..... 5-41

Inspecting the refrigerant (gas) level (AC) ..... 5-42
Every 500 hours ..... 5-44
Replacing the fuel filter ..... 5-44
Replacing the water separator filter .... 5-44
Inspecting the slew pinion gear ..... 5-45
Every 1000 hours ..... 5-46
Replacing the hydraulic oil return filter 5-46
Replacing the pilot line filter ..... 5-46
Replacing the travel motor gear oil ..... 5-46
Replacing the air cleaner element ..... 5-46
Replacing the air breather filter ..... 5-47
Inspecting and adjusting the engine valve clearance ..... 5-47
Every 1500 hours ..... 5-48
Inspecting the crankcase breather system ..... 5-48
Every 2000 hours ..... 5-49
Cleaning the engine cooling system ... 5-49
Inspecting the accumulator ..... 5-51
Every 3000 hours ..... 5-53
Inspecting the turbocharger (blow wash as necessary) ..... 5-53
Inspecting, cleaning and checking operation of the EGR valve ..... 5-53
Cleaning the EGR lead valve ..... 5-53
Cleaning the EGR cooler (cleaning the water side and exhaust air passage blower) ..... 5-53
Inspecting the operation of the air intake throttle valve ..... 5-53
Inspecting and cleaning the fuel injector ..... 5-53
Every 4000 hours ..... 5-54
Replacing the hydraulic oil and cleaning the suction strainer ..... 5-54
When required ..... 5-58
Replacing the bucket teeth and the side cutters ..... 5-58
Replacing the bucket ..... 5-60
Adjusting the gap between the bucket and arm (If equipped) ..... 5-62
Inspecting and replenishing the windshield washer fluid ..... 5-63
Inspecting and cleaning the DPF soot filter ..... 5-63
Draining the water from the water separator ..... 5-64
Lubricating the levers and pedals ..... 5-65
Inspecting the rubber crawlers ..... 5-66
Replacing the rubber crawlers ..... 5-67
Every 2 years ..... 5-69
Replacing the receiver dryer ..... 5-69
Maintenance during extended storage period ..... 5-70

**Troubleshooting ..... 6-1**

Symptoms that are not malfunctions ..... 6-2
If the engine overheats ..... 6-3
If the battery goes dead ..... 6-4
If a fuse blows ..... 6-6
Inspecting and replacing the fuse ..... 6-6
Inspecting the slow blow fuse ..... 6-7
Restarting after adding fuel ..... 6-8
Bleeding air from the fuel system ..... 6-8
If a warning lamp flashes ..... 6-10
Vehicle error code list ..... 6-12
Engine error code list ..... 6-14
Other symptoms ..... 6-22
Lowering the boom to the ground ..... 6-25
Towing ..... 6-26
If the cab is damaged ..... 6-27
Exhaust gas control system error ..... 6-28
Error code list ..... 6-28
NOx control diagnostic system (NCD) 6-29
Particulate control diagnostic system (PCD) ..... 6-29
Limiting the engine output ..... 6-30

**Specifications ..... 7-1**

Basic Specifications ..... 7-2
Machine dimensions ..... 7-4
Operating ranges ..... 7-10
Lifting Capacities ..... 7-16

**Options ..... 8-1**

General precautions ..... 8-2
Safety precautions ..... 8-2
Cautions when installing attachments .. 8-2
Cautions when operating attachments. 8-3
Attachment combination table ..... 8-4
Selecting a lever pattern ..... 8-5
Switching the lever pattern ..... 8-5
Hydraulic breaker ..... 8-6
Cautions on operating ..... 8-6
Replacing the hydraulic oil regularly ..... 8-7
Travel alarm ..... 8-8
Optional equipment mass ..... 8-9
Biodegradable oil ..... 8-10

Replacing the mineral oil with biodegradable oil ..... 8-10
Cab options ..... 8-11
Angle dozer blade ..... 8-12
Specifications ..... 8-13
Operating lever switch kit 1 ..... 8-14
Horn button ..... 8-14
Deceleration button ..... 8-14
Travel speed button ..... 8-14
Auxiliary 1st switches ..... 8-15
Auxiliary 2nd/4th switch ..... 8-15
Auxiliary 2/4 select button ..... 8-16
Swing/Second boom select button ..... 8-16
Takeuchi Security System ..... 8-18
Starter key ..... 8-18
Starting the engine ..... 8-18
Registering and deleting the starter key ..... 8-19
If the master key is lost ..... 8-25
Countries where the system can be used ..... 8-25
LED lights ..... 8-26
Takeuchi Fleet Management (TFM) ..... 8-28

# REVISION HISTORY

When checking the revision history, refer to the book code (1) on the cover page.

Example:
O EN TB216_E-X b

- Revision history (A to Z, a to z)
- Model code
- Language
- Type
  - O: Operator's Manual
  - W: Workshop Manual

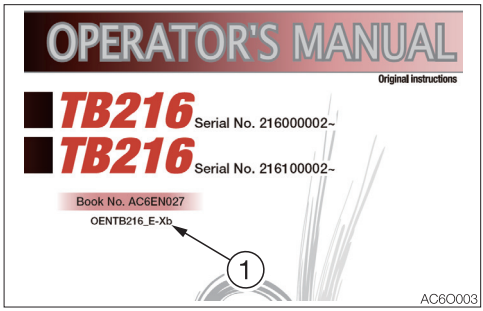


| Revision history | Date | Description | Importance |
|---|---|---|---|
| Y | 08/2023 | Changed: | |
| | | Precautions on maintenance ..... 1-26 | High |
| | | Service data ..... 5-4 | High |
| | | Engine error code list ..... 6-14 | High |
| | | Basic Specifications ..... 7-2 | High |
| | | Declaration of Conformity ..... 8-34 | High |
| Z | 11/2023 | Changed: | |
| | | Takeuchi Fleet Management (TFM) ..... 8-28 | High |
| a | 05/2024 | Changed: | |
| | | Precautions on maintenance ..... 1-26 | High |
| | | Declaration of Conformity ..... 8-34 | High |
| b | 02/2025 | Changed: | |
| | | Safety signs (decals) ..... 1-35 | High |
| | | Radio ..... 2-58 | High |
| c | 04/2025 | Changed: | |
| | | Lifting Capacities ..... 7-16 | High |
| d | 10/2025 | Changed: | |
| | | Service data ..... 5-4 | High |

# SAFETY



# GENERAL PRECAUTIONS

**It is your responsibility to observe all pertinent laws and regulations and to follow the manufacture's instructions on machine operation, inspection and maintenance.**

Virtually all accidents occur as the result of a failure to observe basic safety rules and precautions.
Most accidents can be prevented by identifying the potentially hazardous situations beforehand.
Read and understand all safety messages which describe how to prevent accidents.
Do not operate the machine until you are sure that you have gained a proper understanding of its operation, inspection and maintenance.

### Observe all safety rules

- Operation, inspection and maintenance of this machine must be performed only by a trained and qualified person.
- All rules, regulations, precautions and safety procedures must be understood and followed when performing operation, inspection and maintenance of this machine.
- Do not perform any operation, inspection and maintenance of this machine when under the adverse influence of alcohol, drugs, medication, fatigue, or insufficient sleep.

### When a problem is found on the machine

If any problem (noise, vibration, smell, disorder of instrument, smoke, oil leak, wrong indication of alarm or unusual indication in the multi-information display, etc.) is detected during the operation or inspection and maintenance of the machine, immediately inform your sales or service dealer and take proper actions. Do not operate the machine until the trouble is cleared.

### Operating temperature range

To maintain the performance of machine and to prevent it from early wear, observe the following operating conditions.

- Do not operate the machine if the ambient temperature is higher than +45°C (+113°F) or lower than –15°C (+5°F).
  - If operated at an ambient temperature of higher than +45°C (+113°F), the engine may overheat and cause the engine oil to degrade. Also, the hydraulic oil may become very hot, causing damage to the hydraulic equipment.
  - If operated at an ambient temperature of lower than –15°C (+5°F), the parts made of rubber such as gaskets may get hardened to cause an early wear or damage to the machine.
  - If the machine is to be used outside the ambient temperature range described above, consult your sales or a service dealer.

### Wear appropriate clothing and protective equipment

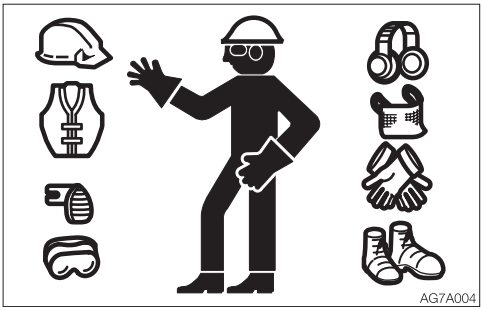


- Do not wear loose clothing or any accessory that can catch on controls or in moving parts.
- Do not wear oily or fuel stained clothing that can easily catch fire.
- Wear a hard hat, safety shoes, safety glasses, filter mask, heavy gloves, ear protection and other protective equipment as required by job conditions. Wear required appropriate equipment such as safety glasses and filter mask when using grinders, hammers or compressed air, as metal fragments or other objects can fly and cause serious injury.
- Use hearing protection when operating the machine. Loud prolonged noise can cause hearing impairments, even the total loss of hearing.

### Install a fire extinguisher and first aid kit

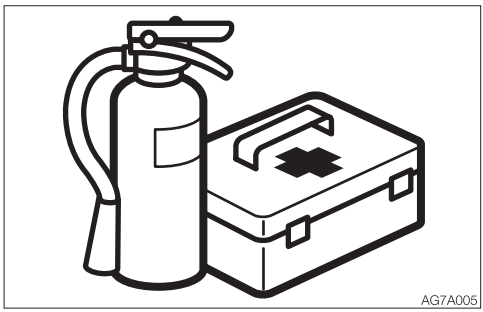


Be prepared for fire and accidents

- Install an extinguisher and a first aid kit, and learn how to use them.
- Lean how to fight a fire and how to deal with accidents.
- Know how to contact emergency assistance and make a list of emergency contacts.

### Never remove safety equipment

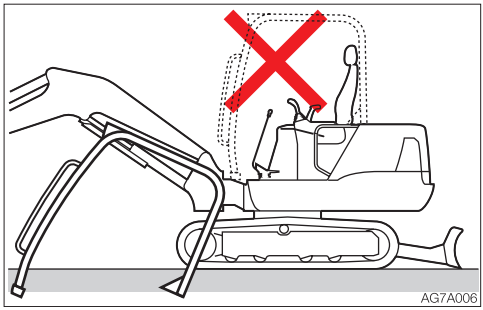


- Make sure all protective guards, covers and doors are in place and secured. Repair or replace damaged parts before operating the machine.
- Know how to use the safety lock lever, seat belt and other safety equipment and use them properly.
- Never remove any safety equipment except for servicing. Keep all safety equipment in good operating condition.

### Use a signal person and a flag person

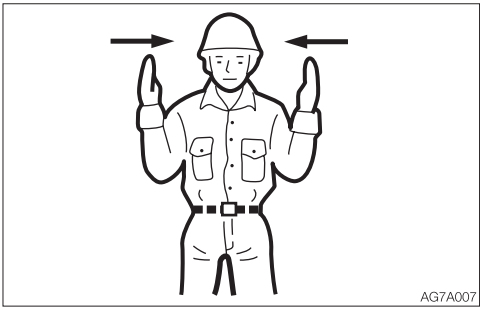


Learn how to use the hand signals required for particular jobs and make sure who has the responsibility for signaling.

- All personnel must fully understand all the signals.
- The operator must respond to signals only from the appointed signal person, but must obey a stop signal at any time from anyone.
- The signal person must stand in a clearly visible location when giving signals.

### Cautions when standing up from or leaving the operator's seat

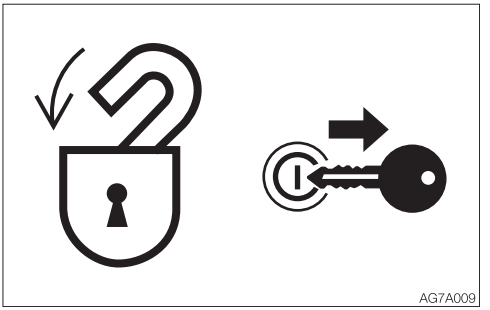


- Before standing up from the operator's seat to open/close the window or remove/install the lower window, lower the working equipment to the ground, raise the safety lock lever to engage the lock and stop the engine. If any controls should be accidentally touched when the safety lock lever is lowered (unlocked), the machine will suddenly move and cause serious injury or death.
- Be careful not to touch the operating levers when raising or lowering the safety lock lever.
- Before leaving the operator's seat, lower the working equipment to the ground, raise the safety lock lever to engage the lock and stop the engine. Also, be sure to remove the key, lock the door and covers, take it with you and store it in a specified place.

### Avoid fire and explosion hazards




Keep flames away from fuel, oil, grease and antifreeze. Fuel is particularly flammable and dangerous.

- When handling these combustible materials, keep lit cigarettes, matches, lighters and other flames or sources of flames away.
- Do not smoke or permit open flames while handling fuel or working on the fuel system.
- Do not leave the location while refilling with fuel or oil.
- Never remove the fuel cap or add fuel when the engine is running or still hot. Also, do not spill the fuel on the hot surface of the machine or the component of the electric system.
- Clean up spilled fuel or oil immediately.
- Check for fuel, oil leak. Stop all leaks and clean the machine before operating.
- When operating with grinder or welding, move inflammables to a safe place.
- Do not cut or weld on pipes or tubes that contain flammable fluids. Clean thoroughly with nonflammable solvent before cutting or welding.
- Remove all trash or debris from the machine. Make sure that oily rags or other flammable material are not stored on the machine.
- Handle all solvents and dry chemicals (foam type fire extinguisher) according to procedures identified on manufacturer's containers. Work in a well-ventilated area.
- Never use fuel for cleaning purposes. Always use a nonflammable solvent.
- When handling the fuel, washing oil or paint, open the door and windows to ventilate thoroughly.
- Store all flammable fluids and materials in a safe and well-ventilated place.
- The short circuit of the electric system may cause the fire. Check for any loosened connections or damage to the wires every day. Retighten the loosened connector and wire clamp. Fix or change the damaged wire.
- Fire from the pipes:
  Make sure that the clamps, guards and cushions of the hoses and tubes are securely fixed. If not, hoses or tubes may be damaged due to vibration or contact with other parts during operation. This can cause the high-pressure oil to spurt out, resulting in the fire or injury.
- Do not perform the DPF regeneration if the machine is surrounded by flammable items such as plants, trees, dry grass, wastepaper, oil and waste tires. There is a risk of fire due to the high-temperature exhaust gas emitted from the DPF.
  DPF: Diesel Particulate Filter

### Exhaust fumes from the engine are poisonous

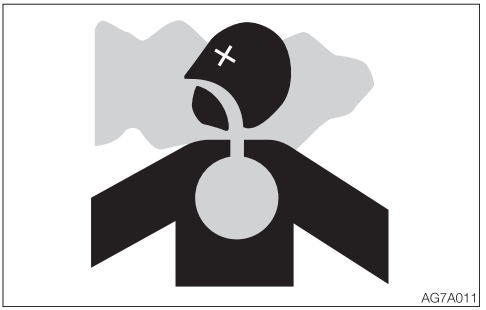


- Do not operate the engine in an enclosed area without adequate ventilation.
- If natural ventilation is not possible, install ventilators, fans, exhaust extension pipes or other venting devices.
- Do not perform the DPF regeneration in poorly-ventilated indoor spaces, as smoke could be generated during the DPF regeneration or carbon monoxide poisoning could result.

### Handling asbestos dust

Inhaling asbestos dust can cause lung cancer. When handling the materials which may contain asbestos, take the following precautions:

- Never use compressed air for cleaning.
- Avoid brushing or grinding parts containing asbestos.
- For clean up, use a vacuum equipped with a high efficiency particulate air filter (HEPA).
- Wear the stipulated respirator if there is no other way to control the dust. When working indoors, install a ventilation system with a macromolecular filter.
- Do not allow unauthorized personnel in the work area while working.
- Follow the rules and environmental standard applicable to the work area.

### Be careful not to get crushed or cut




Never put your hands, feet or other parts of your body between the upperstructure and the undercarriage or tracks, between the machine body and working equipment, or between a cylinder and moving part. The sizes of these gaps change when the machine moves, and a person can suffer severe injury or death.

### Using optional products

- Consult with Takeuchi before installing optional attachments. Depending on the type of attachments or the combination of them, the attachment may come into contact with the operator's compartment or the other parts of the machine. Make sure that the optional attachment installed is not contacted with other parts before use.
- Do not use attachments that have not been approved by Takeuchi. Doing so may compromise safety or adversely affect the machine's operation or service life.
- Takeuchi will not be held responsible for any injuries, accidents or damage to its products caused by the use by a non-approved attachment.

### Never modify the machine

Unauthorized modifications to this machine can cause injury or death. Never make unauthorized modifications to any part of this machine.
If you modify or alter the configuration of the machine in a way which results in a restriction of the operator's field of vision, a new risk assessment will need to be performed. If this becomes necessary, contact your Takeuchi service or sales dealer.

# PRECAUTIONS WHEN PREPARING

### Know the work area

Before starting operation, know the working area condition to ensure safe operation.

- Inspect the topography and ground condition of the working area, or the structure of the building when working indoors, and take the safety precautions as necessary.
- Be sure to avoid all hazards and obstructions such as ditches, underground lines, trees, cliffs, overhead electrical wires, or places where there is a danger of falling rocks or slides.

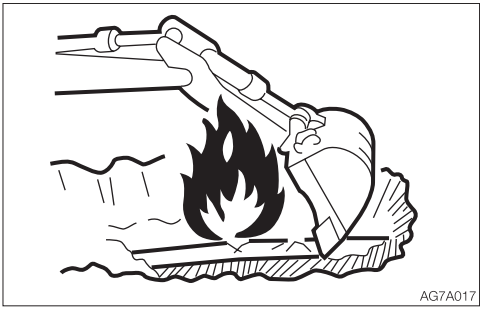


- Check with the administrator for the locations of buried gas pipes, water pipes and power cables. If necessary, determine what specific precautions must be taken to insure safety by consulting with the administrator.
- When working on roads, be sure to consider the safety of pedestrians and vehicles.
  - Use a flag person and/or a signal.
  - Fence off the working area and keep off unauthorized persons.
- When working in water or crossing shallow streams or creeks, check the depth of the water, the solidity of the ground and the water flow speed beforehand.
  Refer to “Cautions on operating” for further instructions.




- Do not perform the DPF regeneration if the machine is surrounded by flammable items such as plants, trees, dry grass, wastepaper, oil and waste tires. There is a risk of fire due to the high-temperature exhaust gas emitted from the DPF.
  DPF: Diesel Particulate Filter
- The DPF may automatically perform the regeneration while the engine is left running. Make sure that there are no flammable items around the DPF and the exhaust line, and also that the engine hood is closed to prevent fire. Be careful not to burn yourself on the high-temperature exhaust gas.
- Do not perform the DPF regeneration in poorly-ventilated indoor spaces, as smoke could be generated during the DPF regeneration or carbon monoxide poisoning could result.

### Check the strength of the bridge

When traveling over a bridge or a structure, check the permissible load. If the strength is insufficient, reinforce the bridge or the structure.

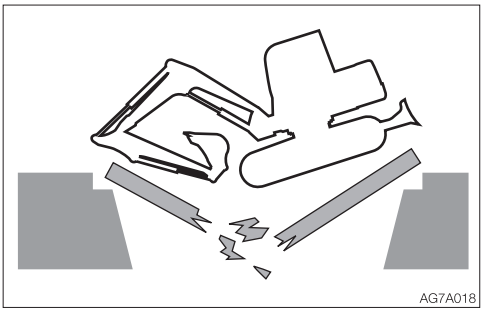
AG7A018

### Always keep the machine clean

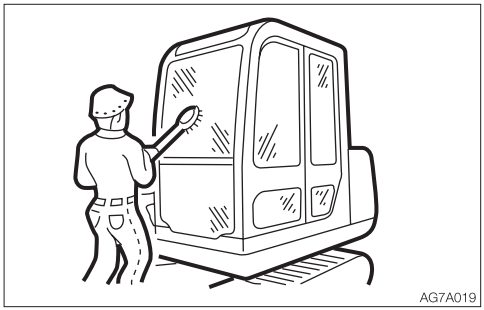
AG7A019

- Wipe off any oil, grease, mud, snow or ice, to prevent accidents due to slipping.
- Remove all loose objects and unnecessary devices from the machine.
- Remove any dirt, oil or grease from the engine area to prevent fires.
- Clean around the operator's seat and remove any unnecessary object from the machine.

### Perform inspection and maintenance every day

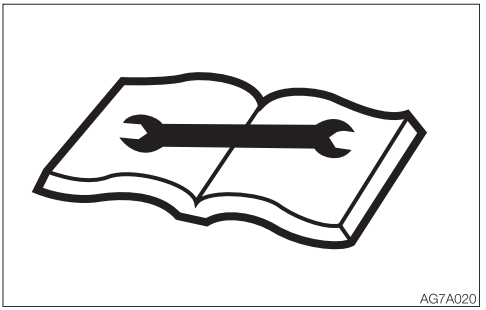


Failure to identify or repair the irregularities or damage on machine can lead to accidents.

- Before operating, perform the specified inspection and make prompt repairs where necessary.
- If a failure occurs and the operation becomes impossible or the engine fails, immediately stop the machine by following the shutdown procedure, and keep machine securely parked until the malfunction is corrected.

### Cautions in the operator's compartment

- Remove mud and grease from shoe soles before entering the operator's compartment. Pedaling the machine with the shoes with mud and grease will cause a slip accident.
- Do not leave the parts or tools around the operator's seat.
- Do not leave any plastic bottles in the operator's compartment or attach any suction cups on the window glass. The plastic bottle or suction cup act as a lens and can cause fire.
- Do not use the mobile phone during traveling or working.
- Do not bring combustibles or explosives into the operator's compartment.
- After smoking, be sure to tightly close the lid of the ashtray to put out the match or cigarette.
- Do not leave the cigarette lighter in the operator's compartment. When the room temperature rises, the lighter may explore.

### Emergency exit

Front window (excluding machines with a front guard)

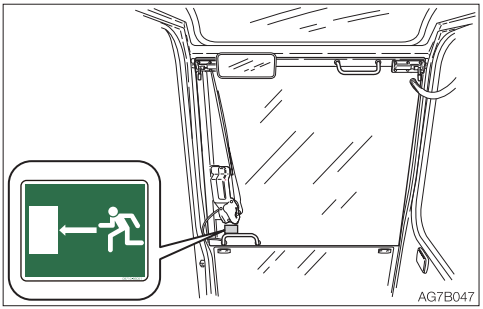


If you should become trapped inside the cab, open the front window to get out.

### Emergency hammer (optional)

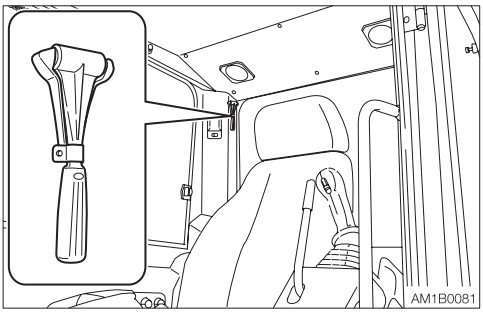


An emergency hammer is installed to be used to escape from the cab in an emergency. When escaping, break the windows with the hammer.

- When breaking the windowpane with a hammer, take great care not to injure yourself with the broken glass pieces.
- Remove the glass pieces from the window sill so as not to cut yourself when evacuating. Broken glass will fall from the window, so be careful of your footing and do not slip on the glass.

# PRECAUTIONS WHEN STARTING

**Support your weight in a three point secure stance when getting on/off the machine**

- Do not jump on or down from the machine. Never attempt to get on or off the moving machine.
- When getting on or off the cab, first fully open the door to the locked position and check that it does not move (for machines with cab).




- Climb up/down the steps facing the machine and holding the handrail to support your weight in a three point secure stance (hand and feet).
- Never use the safety lock lever or control levers as hand holds.

**Before starting the machine, ask any unauthorized personnel to leave the area**

Do not start the engine until you are sure it is safe to start the machine by checking the following items.

- Walk around the machine and warn the person who is servicing the machine or is walking near the machine. Do not start the machine until you are certain that no one is around the machine.




- Check if there is a “DO NOT OPERATE” alert sign or similar sign is on the cab door, controls or starter switch. If there is one, do not start the engine or touch any levers.
- Sound the horn to warn people around the machine.

**Sit in the operator’s seat and start the engine**

- Adjust the seat to securely latch it.

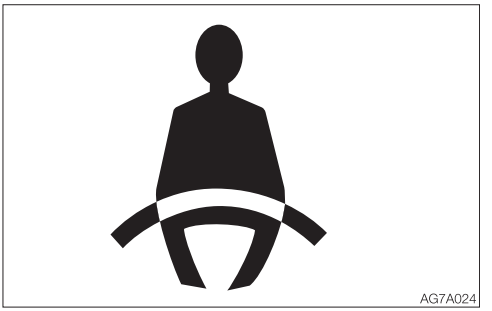


- Fasten the seat belt.
- Check if the parking brake is on and all control levers and pedals are in the neutral position.
- Check if the safety lock lever is in the lock position.
- Make sure that no one is near the machine.
- Start and operate the machine only from the operator’s seat.
- Never attempt to start the engine by shorting across the starter terminals.

### Starting with jumper cables

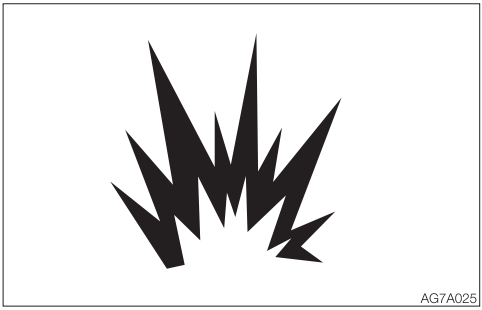


Use jumper cables only in the recommended manner. Improper use of jumper cables can result in battery explosion or unexpected machine motion.
Refer to “If the battery goes dead” for further instructions.

### After starting the engine

After starting the engine, perform the operations and checks described below in a safe place with no persons or obstacles in the area. If any malfunction is found, follow the shutdown procedure and report the malfunction.

- Warm up the engine and hydraulic oil.
- Check if all gauges and warning devices are properly working.
- Check for any noises.
- Test the engine speed control.
- Operate each control to ensure they are properly working.

### In cold climates

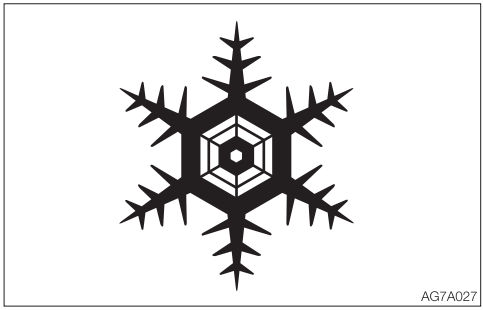


- Be careful of slippery conditions on freezing ground, steps and hand holds.
- In severe cold climates, do not touch any metal parts of the machine with bare hands. The skin will freeze to the metal, resulting in severe injury.
- Do not use ether or starting fluid on this engine. The starting fluids can cause explosion and serious injury or death.
- Warm up the engine and hydraulic oil. If the levers are operated without warming, the machine will not react or move promptly or properly, resulting in accident.

# PRECAUTIONS WHEN OPERATING

### Ensure good visibility

Check the field of view before operating the machine.

- When working in dark places, turn on the machine's working lights and headlights and additional lighting equipment installed, as necessary.
- When visibility is poor due to bad weather (fog, snow, rain or a cloud of dust), stop operating the machine and wait until visibility improves.
- Clean the windows, mirrors, lights and camera to ensure good visibility. Adjust the mirror and camera to the best positions so that the operator can see the rear view (blind spots) from the operator's seat.
- Unauthorized machine modifications or installation of unapproved attachments could impair the visibility. The operator's field of view must conform to ISO 5006.

### Do not permit riders on the machine




Do not allow anyone to ride on any part of the machine at any time while traveling or operating.

### Check if the work area is safe and secure before operation

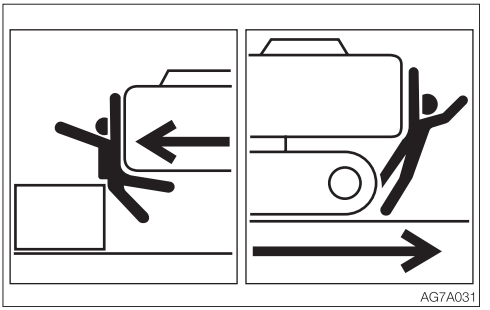


- Confirm the performance limits of the machine.
- Use a signal person at road shoulders, narrow places or where your vision is obstructed.
- Never allow anyone to enter the machine's slewing radius and path.
- Signal your intention to move by sounding the horn.
- There is a blind spot in the rear of the machine. Before traveling in reverse, check that the area is safe and clear.

### Safety precautions when performing the DPF regeneration

The DPF may automatically perform the regeneration while the engine is left running. Make sure that there are no flammable items around the DPF and the exhaust line, and also that the engine hood is closed to prevent fire. Be careful not to burn yourself on the high-temperature exhaust gas.
DPF: Diesel Particulate Filter

### Check the position of the undercarriage (tracks) before traveling

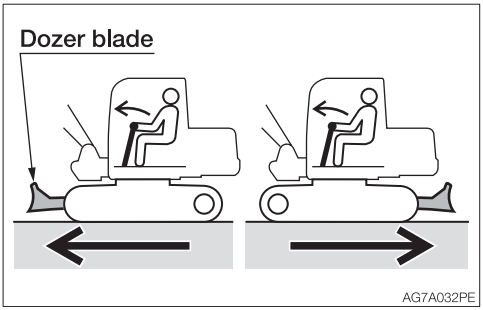


Before operating the travel levers/pedals, make sure that the dozer blade is to the front of the operator's seat. Remember that when the dozer blade is to the rear of the operator's seat, the travel levers/pedals must be operated in the reverse direction from when it is to the front.

### Travel safely

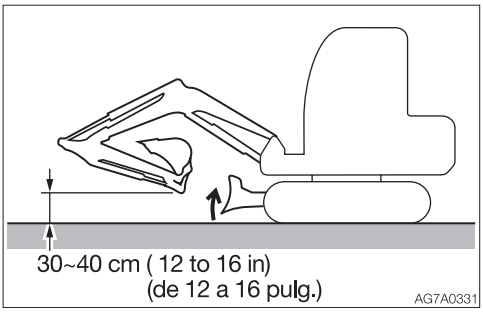


- Travel with the dozer blade raised, the hoe attachment folded as shown on the figure above, and the bucket raised 30 to 40 cm (12 to 16 in.) above the ground.
- Do not slew while traveling. If you must operate the hoe attachment while traveling, operate at speeds slow enough so you have complete control at all times.
- When a load greater than a set value is applied during traveling in 2nd (high) speed, the speed will automatically slow down to 1st (low) speed. When the load becomes lighter, the speed will increase and return to 2nd (high) speed. It should be noted that the travel speed changes depending on the load condition (for machines with the automatic travel shift-down system).
- When traveling on the uneven road or sharp slope, turn off the auto-deceleration switch. If the machine is operated on such roads with the switch turned on, the engine speed may increase, causing the machine speed to suddenly increase (machines with the auto-deceleration switch).

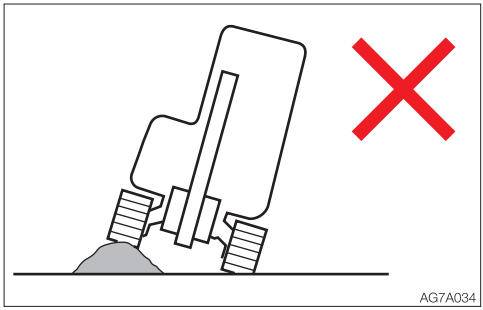


- Avoid crossing over obstacles whenever possible. If you must do so, keep the hoe attachment close to the ground level and travel slowly. Never cross obstacles which will tilt the machine to an angle of 10° or greater.
- On uneven ground, maintain the low speed and avoid starting, stopping or changing directions abruptly. Otherwise, the working equipment may come in contact with the ground, causing the machine to lose its balance and get damaged or to damage the structures in the surrounding area.

### Cautions on traveling on slopes

When traveling on slopes or grades, be careful that the machine does not tip (roll) over or slide.

- Never travel on slopes that are too steep for the machine to maintain its stability (maximum gradeability: 35°, lateral tipping angle: 15°). Note that in reality, the machine's stability becomes lower than the above values depending on the working condition.

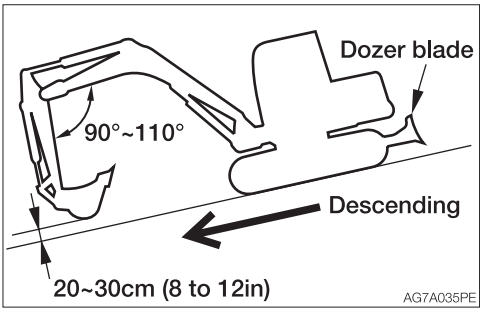


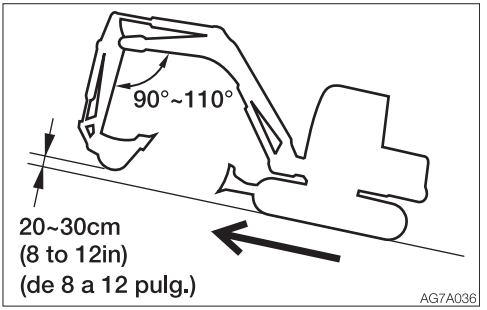


- When climbing a hill, keep the operator's seat facing the hillside. When descending a hill, keep the operator's seat facing the downhill direction. In either case, travel must be done while paying attention to the ground in front of the machine.
- When traveling on slopes, lower the bucket to a height of 20 to 30 cm (8 to 12 in.) above the ground. When climbing a steep slope, extend the hoe attachment to the front. In emergencies, lower the bucket to the ground and stop the machine.
- When traveling on slopes or grades, drive slowly in 1st (low) speed. When descending a slope, slow down the engine speed.
- Do not descend slopes in reverse.

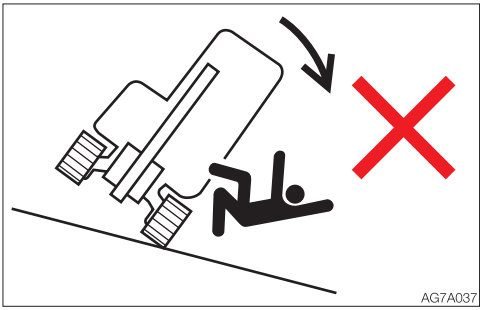


- Do not change directions on slopes or traverse slopes. First return to a flat surface, and then take an alternative path.
- The machine may slip sideways even on a slight slope if the ground is covered with grass or dead leaves, or when traveling on a wet metal plate or frozen surfaces. Make sure the machine is never positioned sideways on slopes.
- If the machine is stalled on the slope, return each operating lever to the neutral position before restarting the engine.

### Operate the machine on snow or ice with extra care

- When traveling on snow or on frozen surfaces, drive at a low speed and avoid starting, stopping or changing directions abruptly.
- In the snowy area, the road shoulder and objects placed beside the road are buried in the snow and cannot be seen. There is a hazard of the machine tipping over or hitting covered objects, so always carry out operations carefully.
- If the machine enters deep snow, there is a hazard that it may tip over or become buried in the snow.
  Be careful not to drive beyond the road shoulder or to get trapped in a snow drift.
- With frozen ground surfaces, the ground becomes soft when the temperature rises, and this may cause the machine to tip over, resulting in an operator trapped inside the machine.
- When parking the machine on an unstable ground, lower the dozer blade.

### Do not move the bucket over the heads of people

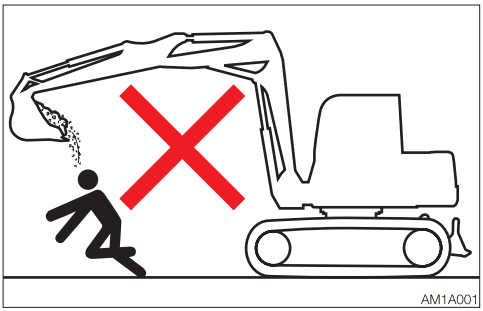


Moving the bucket over the heads of people entails the danger of the load spilling or the sudden dropping of the bucket.

### Ensure driver's safety when loading

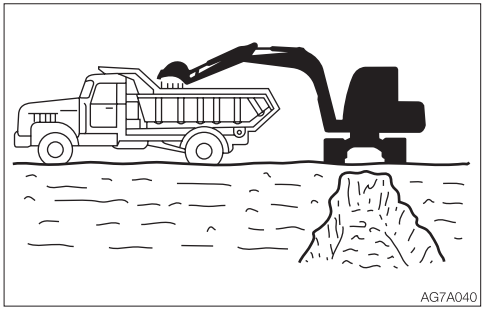


Do not load a truck unless the truck driver is in a safe place.

- Never swing or position the bucket over a person or the cab room.
- Load the truck from the rear.

**Keep a safe distance from the overhead high-voltage cables**

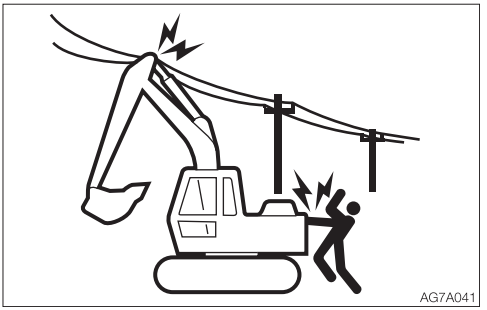
AG7A041

Never bring any part of the machine or loaded material to near to the high voltage cables unless all safety precautions required by the local and national authorities have been installed. If a person comes near to the machine that is discharging sparks or located near to or in contact with the power source, there is a hazard of electric shock and death.

- Always maintain a safe distance between the machine and the high-voltage electric cable.
- Check with the local power company about safe operating procedure before starting operations.
- Consider all cables to be high-voltage cables and treat all cables as energized even though it is known or believed that the power is shut off and the cables are visibly grounded.
- Use a signal person to give warning if the machine approaches too close to the high-voltage electric cables.
- Caution all personnel in the work area not to come close to the machine or the loaded material.

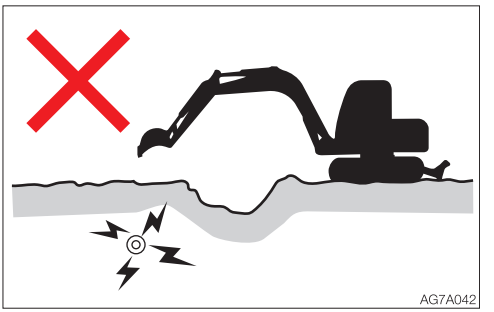
AG7A042

- Pay also careful attention to the high-voltage electric cables buried underground.

### Watch out for hazardous working conditions

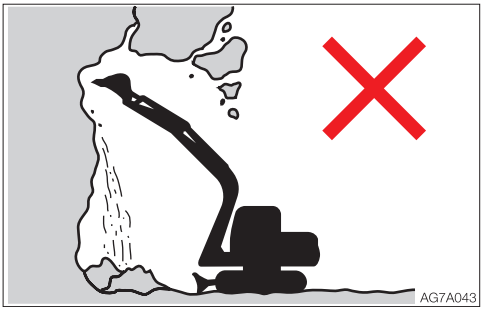


- Never undercut a high bank. Doing so is dangerous as it may cause ground collapse.
- Do not operate in places where there is a danger of falling rocks.

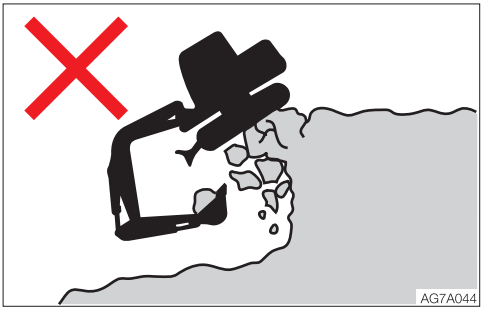


- Maintain a safe distance between the machine and the edge of the digging site. Do not dig the ground under the front of the machine.
- When working close to the cliffs or road shoulders, to make it easier to escape if there is any problem, set the crawlers at right angles to the cliff or road shoulder and the dozer blade to the front when carrying out operations.

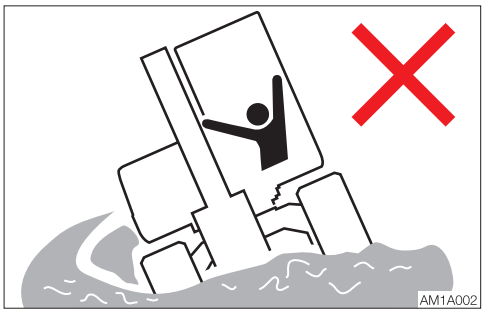


- Do not enter areas where there is soft ground. Doing so could cause the machine to tilt under its own weight, resulting in a machine tipping over or sinking into the ground.

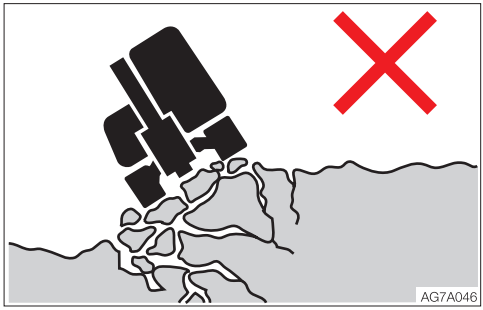


- Do not come close to unstable grounds (cliffs, road shoulders, deep ditches). If the ground should collapse under the weight or vibration of the machine, there is a hazard that the machine may fall or tip over.
  - Remember that the soil after heavy rain or blasting is weak.
  - The ground of top of the embankment and of the circumferences of the excavated ditches are also weak.

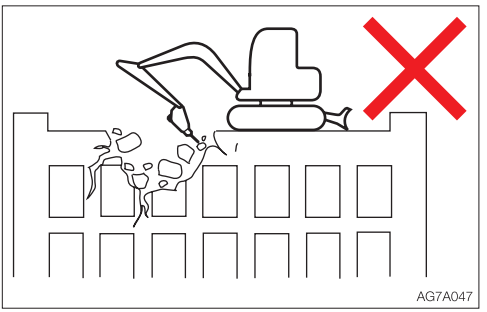


- Do not perform demolition work under the machine. There is a hazard that the machine may fall down, because the ground becomes unstable.
- When working on or from the top of buildings or other structures, check the strength and the structure before starting operations. If a building or structure collapses, serious injury or damage will result.

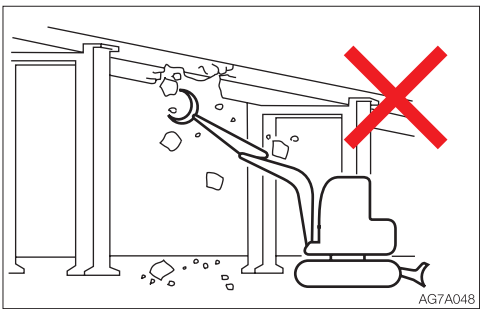


- When doing demolition work, do not perform demolition above your head. There is a hazard of broken parts falling or of the building collapsing and causing serious injury or damage.

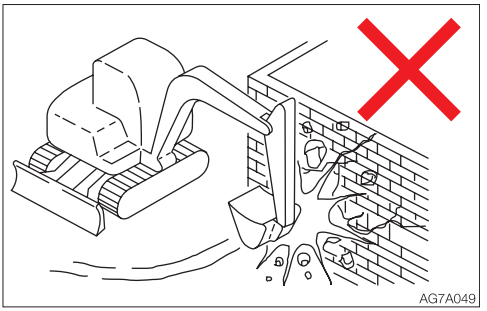


- Do not use the impact force of the hoe attachment for breaking work. There is a hazard of serious injury being caused by flying pieces of broken materials and by the damaged hoe attachment.

### Be careful with flying objects

This machine is not equipped with protective equipment to protect the operator from flying objects. Do not use this machine in places where there are risks of the operator being hit by flying objects.

### Operating on slopes is dangerous

When operating on slopes or grades, slewing or operation of working equipment may cause the machine to lose stability and tip over. Avoid operating on slopes whenever possible.

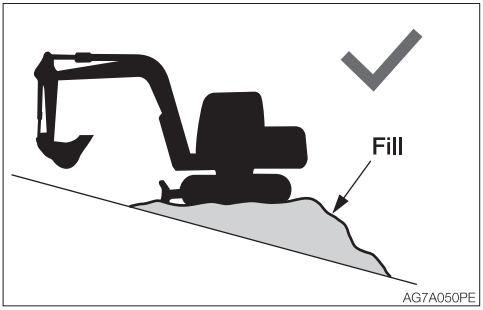


- Level off the work area.

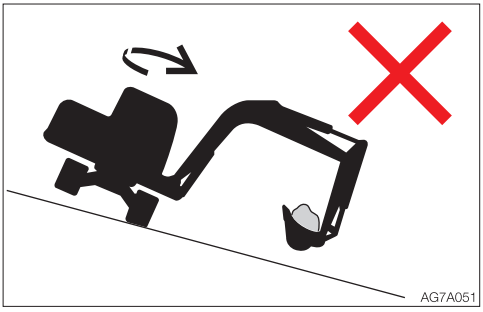


- Avoid slewing to the downhill direction with the bucket full of loaded material. This will reduce the stability of the machine and may result in tipping over.

### Never slew (swing) sideways with a heavy load

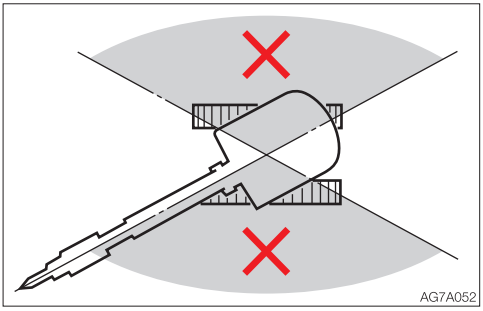


The machine can tip over more easily in the lateral direction than in the longitudinal direction.

- Do not slew (swing) sideways with a heavy load at the tip of the hoe attachment. In particular, do not slew (swing) sideways on slopes.
- The tip of the attachment is heavier for machines equipped with breakers, crushers or long arms than for machines equipped with the standard bucket. For such machines with heavier tips, do not perform excavation with the digging arm (boom) facing the downhill direction or operate toward sideways.

### Be careful with the overhead objects

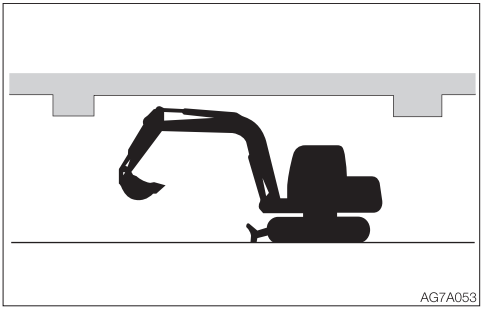


When operating under bridges, in tunnels, near electric cables or indoors, be careful not to let the boom or arm hit overhead objects.

### Cautions when lifting loads

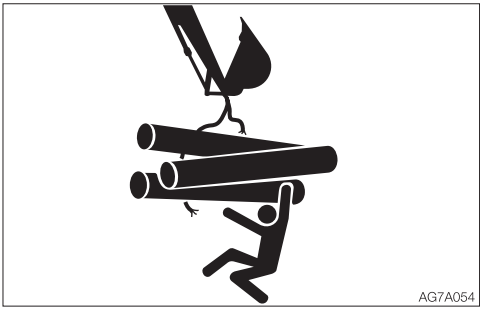


If the machine is used for lifting, it must be equipped with an emergency shut-off valve on the arm and the boom (mono-boom machine). For a 2-piece boom machine, an emergency shut-off valve must be installed on the first boom, the second boom and the arm, respectively. Great care is needed if the excavator is used for lifting.

- Never lift loads in excess of capacity. Overload will cause the machine to roll and can result in serious injury or death.
- All rated lift capacities are determined by using a machine placed on a stable and flat ground. For a safe lifting work, the user is expected to make due allowance for the particular job conditions. They include, soft or uneven ground, non-level condition, side loads, dynamic or jerked loads, hazardous conditions, and experience of personnel. The operator and other personnel should fully acquaint themselves with the operator's manual before operating this machine, and rules for safe operation of equipment shall be adhered to at all times.
- The bucket linkage or lifting device may fail if chains or lifting device are incorrectly attached, resulting in serious injury or death.
- Do not attempt to pull stumps out of the ground when using the machine as a crane. The loads imposed on the machine under this use are completely unknown.
- Do not allow anyone to stand on or under the lifted loads or come close to the work area.

### Cautions when towing

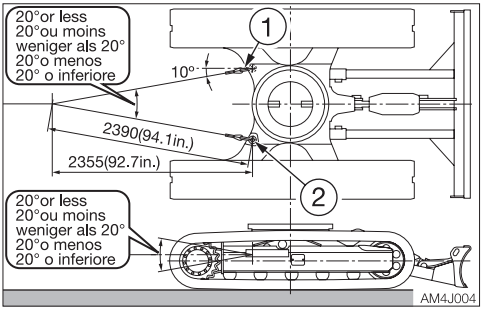


When towing, serious injury or death could result, if performed incorrectly or the wire rope being used is inappropriate or not properly inspected.

- Do not tow using only a towing hole on one side.
- It becomes dangerous if the wire rope breaks or becomes disengaged. Use a wire rope appropriate for the required tractive force.
- Do not use a wire rope that is kinked, twisted or otherwise damaged.
- Do not apply heavy loads abruptly to the wire rope.
- Wear safety gloves when handling the wire rope.
- Make sure there is an operator on the machine being towed as well as on the machine that is towing.
- Never tow on slopes.
- Do not let anyone come near to the wire rope while towing.

Refer to "Towing" for further instructions.

# PRECAUTIONS WHEN STOPPING

## Park safely

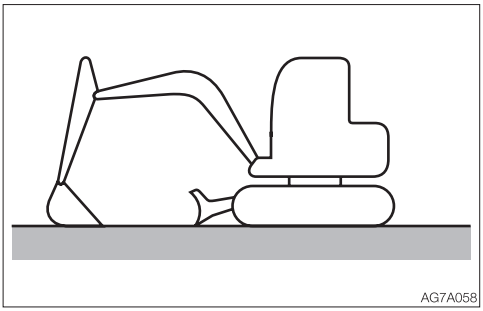


- Park the machine on a flat, rigid and safe ground. Set the parking brake.

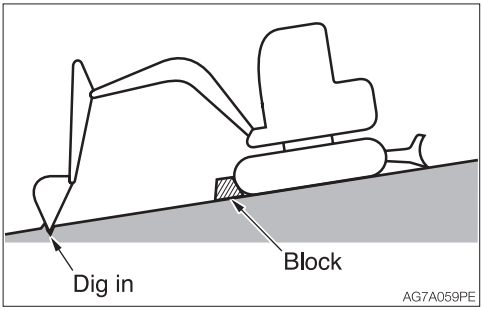


If you must park on a slope or incline, park the machine securely and block the movement of the machine.

- When parking on a street, use barriers, caution signs, lights, etc., so that the machine can easily be seen even at night to avoid collision with other vehicles.

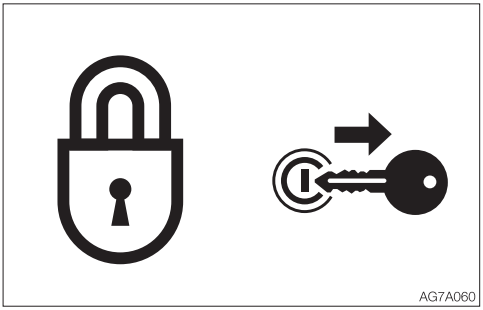


- Before leaving the machine, do the followings:
  1. Lower the bucket and the dozer blade to the ground.
  2. Raise the safety lock lever to the locked position.
  3. Stop the engine and remove the starter key.
  4. Lock the cab and covers and take the key with you.

# PRECAUTIONS WHEN TRANSPORTING

**Load/unload the machine safely**

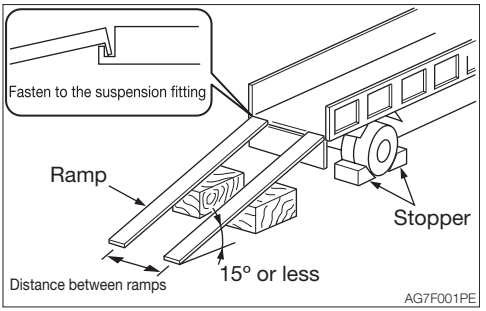


The machine may roll or tip over or fall while being loaded or unloaded. Take the following precautions:

- Select a firm, level surface and keep sufficient distance from road shoulders.
- Secure the ramps of adequate strength and size to the truck bed. The slope of the ramps must not exceed 15°. If the rumps are bowed down too low, support them with poles or blocks.
- Never use the working equipment to load or unload the machine. Doing so may result in tipping over or falling down of the machine.
- Keep the truck bed and loading ramps clean of oil, soil, ice, snow, and other materials to prevent the machine from sliding sideways. Clean the crawlers.
- Chock the transporter wheels to prevent movement.
- Turn off the deceleration switch and auto-deceleration switch. Otherwise, the engine speed may suddenly increase to cause troubles.
- When being loaded or unloaded, travel slowly in 1st (low) gear by following the signal from the signal person.
- Never change courses on the ramps.
- Do not slew/swing on the ramps. The machine may tip over.
- When slewing/swinging on the truck bed, do it slowly as the footing should be unstable.
- Lock the cab door after being loaded, if applicable. Otherwise, the door may open during transport.
- Chock the tracks and secure the machine to the truck bed with wire rope or chain.

### Hoist the machine safely

- Know and use correct crane signals.
- Check the hoisting equipment for damaged or missing parts on a daily basis and replace as necessary.
- When hoisting, use a wire rope capable of lifting the machine mass.
- Hoist the machine in such a manner described in the procedure below. Do not do it in any other manner, as it may result in the machine losing its balance.
  Refer to “Hoisting the machine” for further instructions.
- Do not hoist the machine with an operator on it.
- When hoisting, hoist slowly so that the machine does not tip.
- Keep everyone out of the area when hoisting. Do not move the machine over the heads of the persons.

### Transport the machine safely

- Know and follow the applicable safety rules, vehicle code and traffic laws when transporting the machine.
- Select the best transport route by considering the length, width, height and weight of the truck with the machine loaded on it.
- Never abruptly start or stop or run at a high speed at the sharp curves during transport. Doing so will move or lose the balance of the loaded machine.

# PRECAUTIONS ON MAINTENANCE

### Display a “DO NOT OPERATE” alert sign

Severe injury could result if an unauthorized person should start the engine or touch controls during inspection or maintenance.
- Before performing maintenance, stop the engine, remove the key and take it with you.




- Display a “DO NOT OPERATE” alert sign on easy-to-see locations such as on the starter switch or on control levers.

### Use the correct tools

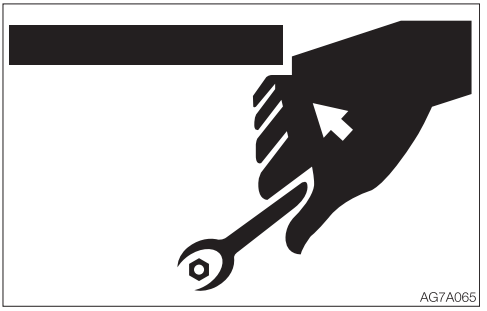


Do not use damaged or weakened tools or tools designed for other purposes. Use tools appropriate for the work involved.

### Replace safety-critical parts periodically

- Replace fuel hoses periodically. Fuel hoses wear out over time, even if they do not show any symptom of wear.
- Regardless of the replacement schedule, replace immediately if a symptom of wear is found.
  Refer to “List of safety-critical parts” for further details.

### Explosionproof lighting




To prevent an ignition or explosion, use explosion-proof lights when inspecting fuel, oil, coolant or battery fluid. Otherwise, explosion could result causing serious injury or death.

### Prohibit access by unauthorized persons

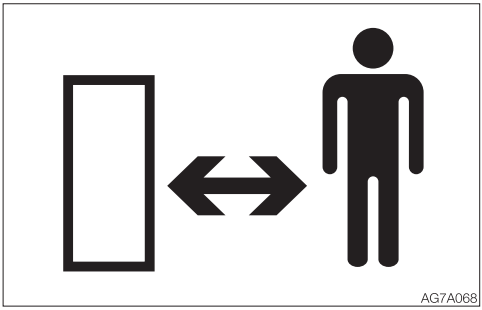


Do not allow unauthorized personnel in the work area while working. Be careful when grinding, welding or using a hammer. You could be injured by flying debris from the machine.

### Prepare work area

- Select a firm, level work area. Make sure there is adequate light and, if indoors, ventilation.
- Clear obstacles and dangerous objects. Eliminate slippery areas.

### Always keep the machine clean

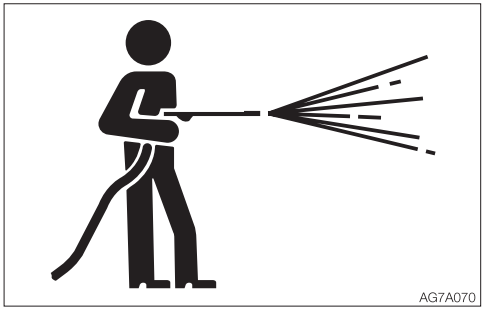


- Clean the machine before performing maintenance.
- Stop the engine before washing the machine. Cover the electrical parts so that water cannot enter. Water on electrical parts could cause short-circuits or malfunctions. Do not use water or steam to wash the battery, electronic control components, sensors, connectors or the operator's compartment.

### Stop the engine before performing maintenance

- Avoid lubrication or mechanical adjustments while the machine is moving or while the engine is running when the machine is not moving.
- If maintenance must be performed with the engine running, always work as a two person team communicating each other.
  - One person must sit in the operator's seat so that he/she can immediately stop the engine when necessary. He/she must take care not to touch the lever or pedal unless necessary.
  - The one who performs maintenance must make sure to keep his/her body or clothing away from the moving part of the machine.

### Stay clear of the moving parts

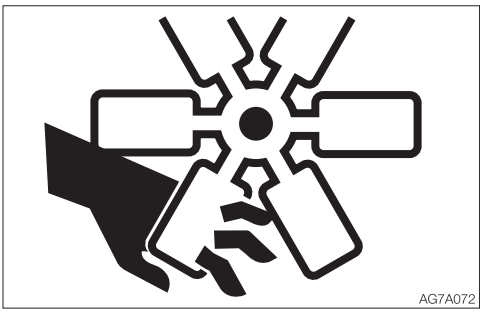


- Stay clear of all rotating and moving parts. If a hand or tool becomes trapped in the rotating or moving part, serious injury or death could result.
- If a tool or other objects is dropped or inserted in the fan or fan belt, it will be flown or cut in pieces. Do not drop or insert anything in the fan or fan belt.

### Firmly secure the machine or any component that may fall




- Before performing maintenance or repairs under the machine, lower all moveable working equipment to the ground or in the lowermost position.
- Chock the tracks.
- If you must work beneath the raised machine or equipment, always use wood blocks, jack-stands or other rigid and stable supports. Never get under the machine or working equipment if they are not sufficiently supported. This procedure is especially important when working on hydraulic cylinders.

### Secure the working equipment

To prevent unexpected movement, firmly secure the working equipment when repairing or replacing the bucket teeth or side cutter.

### Secure the engine hood or cover when opened

Be sure to secure the engine hood or cover before working the inside. Do not keep the hood or cover open on a windy day or if the machine is parked on a slope.

### Place heavy objects in a stable position




When it is necessary to temporally place a heavy object or an attachment on the ground during removal or installation, be sure to place it in a stable position. Keep unauthorized persons from the storage place for such object.

### Cautions when refueling




- Do not smoke or permit open flames while fueling or near fueling operations.
- Never remove the fuel cap or add fuel when the engine is running or still hot. Do not spill fuel on the hot surface of the machine.
- Fill the fuel tank in a well ventilated place.
- Do not fill the fuel tank to capacity. Allow room for oil expansion.
- Clean up spilled fuel immediately.
- Securely tighten the fuel filler cap. If the fuel cap is lost, replace it only with the genuine cap. Use of a non-approved cap without proper venting may result in pressurization of the tank.
- Never use fuel for cleaning.
- Use the correct grade of fuel for the operating season.

### Handling of hoses

Oil leak or fuel leak can cause a fire.

- Do not twist, bend or hit the hoses.
- Never use twisted, bent or cracked pipes, tubes or hoses; otherwise, they may burst.
- Retighten loose connection.

### Be careful with hot and pressurized components

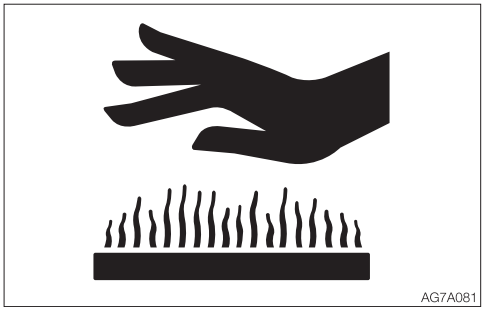


Stop the engine and allow the machine to cool down before performing maintenance.

- The engine, muffler, radiator, hydraulic lines, sliding parts and many other parts of the machine are hot immediately after the engine is stopped. Touching these parts will cause burns.
- The engine coolant, hydraulic oil and other oils are also hot and under high pressure. Be careful not to touch the hydraulic oil when loosening the cap or plug. Working on the machine under these conditions could result in burns or injuries due to the hot oil spurting out.
- The DPF and the exhaust gas emitted from the exhaust line can be very hot while the engine is running or the regeneration is under way, as well as immediately after the engine is stopped. Be careful not to accidentally touch them; doing so could cause burns.

### Be careful with hot cooling systems

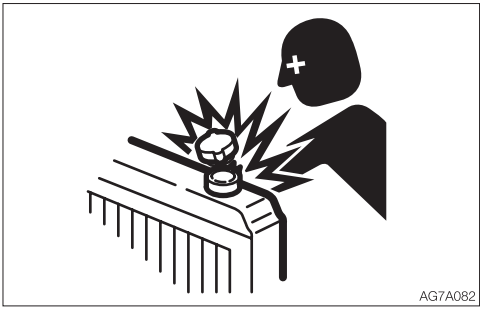


Do not remove the radiator cap or the drain plug when the cooling water is hot. Stop the engine and wait until the engine and the cooling water cool. Then, slowly loosen the radiator cap to release the internal pressure and remove it.

### Be careful with oil internal pressure

Pressure is maintained in the hydraulic circuit long after the engine has been shut down.

- Completely relieve the internal pressure before performing maintenance work.

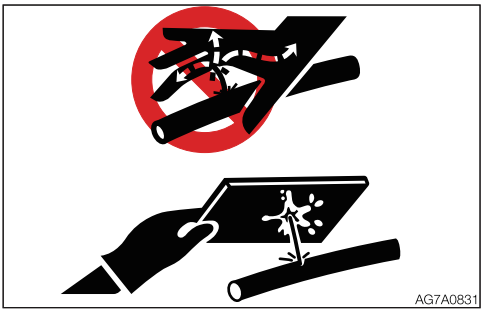


- The hydraulic oil is high enough pressure to penetrate the skin or eyes and cause serious injury, blindness or death. Remember that the hydraulic oil escaping from a small hole is almost invisible. When checking for leaks, wear protective goggle and thick gloves, and use a paperboard or plywood to keep your skin from oil spurting.
  If oil penetrates the skin, it must be surgically removed within a few hours by a doctor familiar with this type of injury.

### Release pressure before working on the hydraulic system

Oil may spurt out if caps or filters are removed or pipes are disconnected before releasing the pressure in the hydraulic system.

- Immediately after the engine is stopped, and while the safety lock lever is still in the unlock position, turn the starter switch to ON and move all the control levers and pedals several times all the way in each direction to release the pressure from the working equipment circuitry.
- Press the air breather button to relieve the internal pressure from the tank.
- When removing plugs or screws, or when disconnecting hoses, stand to the side and loosen them slowly to gradually release the internal pressure before removing.
- Oil or plug may spurt out according to the pressure in the travel motor case. Loosen the plug slowly and release the internal pressure.

### Be careful with debris when the hammer is being used

When using a hammer, pins may fly out or metal particles may be scattered. This may lead to serious injury.

- If hard metal parts such as pins, bucket teeth, side cutter or bearings are hit with a hammer, wear protective gear such as safety goggles and gloves.
- When hitting pins or bucket teeth, always check that there is no one in the surrounding area.

### Never disassemble the track adjuster

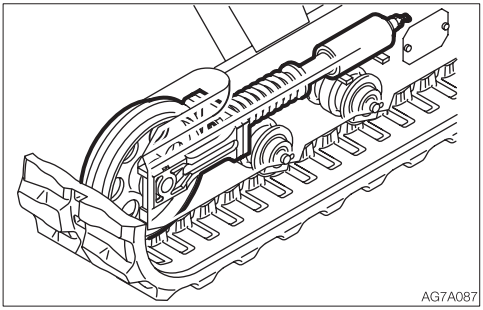


There is a very strong spring contained in the track adjuster. If the track adjuster is accidentally disassembled, the spring can pop out, resulting in serious injury Never disassemble the track adjuster.

### Cautions when servicing the air conditioner

If the refrigerant comes in contact with eyes, it damages your eyesight. If the refrigerant comes in contact with skin, it may cause frostbite. Never touch the refrigerant.

### Handling of the accumulator




Be sure to handle the high-pressure nitrogen gas enclosed in the accumulator with care. If handled incorrectly, it could explode and cause serious injury. Strictly observe the following precautions:

- Do not disassemble.
- Do not allow flame near or throw it into a fire.
- Do not drill, weld or fuse.
- Do not subject it to physical shock such as hitting, rolling or dropping.
- Before disposing of the unit, the sealed gas must be drained. Contact a Takeuchi service agent for help.

### Disconnect the battery wiring




Disconnect the battery wiring before working on the electrical system or doing electric welding. Disconnect the negative (–) battery cable first. When reconnecting, connect the negative (–) battery cable last.

### Use caution when handling batteries

- Do not allow persons (such as children) to come into contact with the product unless they fully understand the handling methods and risks.
- Batteries contain sulfuric acid which will damage the eyes or skin in case of contact.
  - · If eye contact occurs, flush immediately with clean water and get prompt medical attention.
  - · If accidentally swallowed, drink large quantities of water or milk and call a physician immediately.
  - · If acid contacts skin or clothing, wash off immediately with a lot of water.
- Wear protective goggle and gloves when working with batteries.
- Batteries generate flammable hydrogen gas which may explode. Keep away from flame, sparks, fire or lighted cigarettes.
- When checking the level of the battery fluid, use a flashlight.
- Be sure to stop the engine by turning off the starter switch before inspecting or handling the battery.
- Be careful not to let metal tools or any metal objects come into contact with the battery terminals and cause a short circuit.
- Loose battery terminals may result in sparks. Be sure to fasten terminals tightly.
- Make sure the battery caps are tightened securely.
- Do not charge a battery or jump-start the engine if the battery is frozen; otherwise it may explode. Warm the frozen battery to 15°C (60°F) before use.
- Do not use the battery when the fluid level is below the lower level limit. Doing so will hasten the deterioration of the internal portions of the battery and shorten the battery life. It also can cause rupturing (explosion).
- Do not add the distilled water above the upper level limit. Doing so could cause the fluid to leak. This fluid can cause skin damage if contacted, or can cause the machine components to corrode.
- Use a dampened cloth to clean around the fluid level line and check the fluid level. Do not clean with a dry cloth; otherwise it could cause static electricity to build up, resulting in ignition or explosion.

### Periodically replace the safety-critical parts

- To use the machine safely for a longer period, periodically add oil and perform inspection and maintenance. To improving the safely, replace the safety-critical parts like hoses and seat belts periodically. Refer to “Safety-critical parts to be replaced periodically” for further details.
- The “Safety-critical parts to be replaced periodically” are the parts which deteriorate, wear and fatigue after repeated use and whose properties change over time. While these characters of these parts could cause serious physical or personal damage, judging the remaining life of these part are difficult from external inspection or the feeling when operating.
- Replace the “Safety-critical parts to be replaced periodically” if any defect is found from external inspection, even when they have not reached the time specified interval.

### Jump starting with booster cables

- When starting the engine using the booster cables, be sure to connect the cables in the proper order described below. Wrongly connected cables can result in sparking and battery explosion.
  - Do not allow the “machine in trouble” and “rescue machine” to touch each other.
  - Do not allow the positive (+) and negative (–) clips of the booster cables to touch each other or to come in contact with the machine.
  - When connecting, attach the positive booster cable to the positive (+) terminals first. When disconnecting, remove the negative cable from the negative (–) terminal (ground) first.
  - Be sure to connect the clips securely.
  - Connect the last clip of the booster cable to a point as far away from the battery as possible.
- Always wear the protective goggle and gloves when starting the engine by using the booster cables.
- Use the booster cables and clips of a size suited to the capacity of battery. Do not use damaged or corroded booster cables and clips.
- Be sure that the battery of the “rescue machine” has the same capacity as the battery of the “machine in trouble”.

### Have a Takeuchi service agent repair welding

If welding must be performed, make sure that it is done by a qualified person in a properly equipped workplace. To prevent any part from breaking down or being damaged due to overcurrent or sparks, observe the following.

- Disconnect the wiring from the battery before doing electric welding.
- Do not continuously apply 200 V or more.
- The earth ground must be connected within one meter from the welding section. Do not connect the earth ground near to an electronically controlled device/ instrument or connectors.
- Make sure that there are no seals or bearings between the welding section and the earth ground.
- Do not connect the earth ground around the pins for the working equipment or hydraulic cylinders.
- When welding is to be done on the machine body, disconnect the connectors for the electronically controlled devices before working.

### Vibrations operators are subject to

According to the results of the tests conducted to determine the vibrations transmitted to the operator by the machine, the upper limbs are subjected to vibrations lower than 2.5 m/s$^2$ (8.2 ft/s$^2$) while the seated part of the body is subjected to vibrations lower than 0.5 m/s$^2$ (1.64 ft/s$^2$).

### Checks after maintenance

- Gradually increase the engine speed from a low idle to maximum speed and check that there is no oil or water leaking from the serviced parts.
- Operate each control lever and check that the machine is operating properly.

### Disposing of wastes




- Always collect oil that is drained from the machine in containers. Improperly disposed waste oil can cause environmental harm.
- Follow appropriate laws and regulations when disposing of harmful objects such as oil, fuel, coolant, solvent, filters and batteries.
- When disposing of a machine that is no longer usable, dispose of it in accordance with the latest national and local regulations applicable at the time.

### Handling of poisonous chemicals

Poisonous chemicals will cause serious injury if directly contacted.
Poisonous chemistry used in this machine includes grease, battery solution, coolant, paint and adhesive agent.
Handle the poisonous chemicals properly with care.

# SAFETY SIGNS (DECALS)

For the safety of the operator and the personnel working around the site, safety signs (decals) are placed at certain locations on the machine as shown below. Walk around the machine with this manual, and check the content and location of these safety signs. Review these signs and the operating instructions in this manual with your machine operators.

- Keep the signs clean and legible. If any of the safety labels is peeling or damaged and becomes difficult to read, replenish it with a new one. Please include your product serial number when ordering a new sign from the Takeuchi service agent.
- When a part/unit to which a safety sign is attached is replenished, a new sign must be attached to the new part/unit.

## SAFETY SIGNS (DECALS)

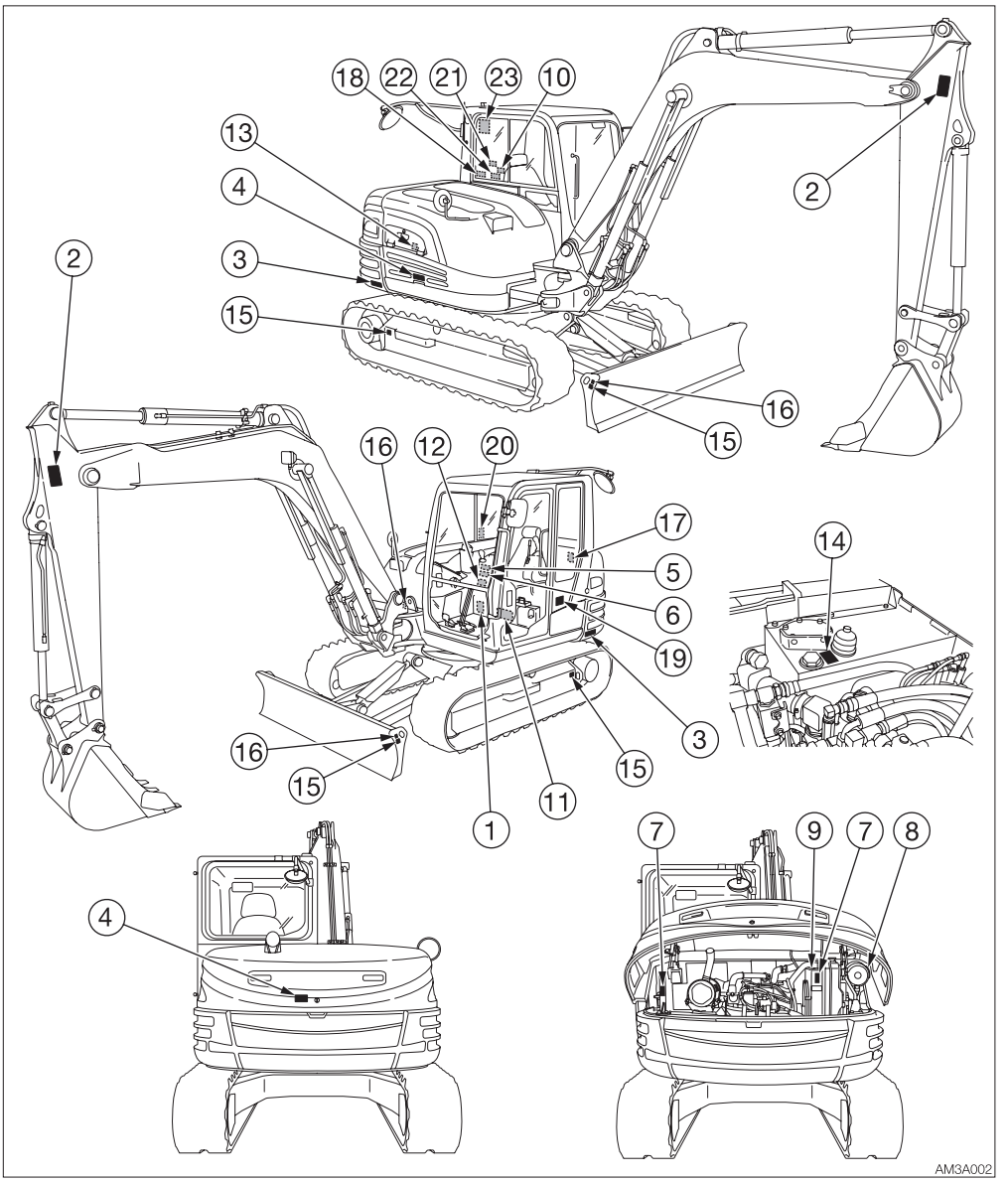

1. No.08810-31556
Warning
Read and understand this manual before performing any operation, inspection or maintenance on this machine.

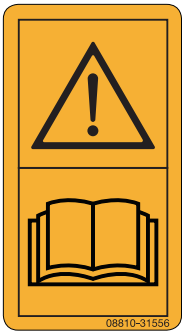


2. No.05793-00049
Safety Distance
Hazard of being hit by the working device of the machine.
Keep away from machine during operation.




3. No.05793-00011
Safety Distance
Do not get near or stand within the machine working area.

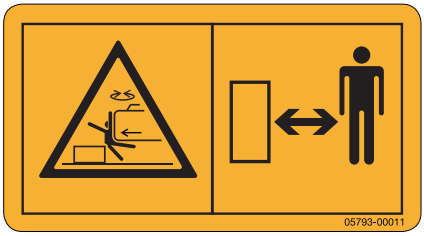


4. No.03793-66006
Hazard of rotating parts
Turn off before inspection and maintenance.




5. No.08810-31557
Hazard from falling window
After raising window, be sure to lock it in place with lock pins.




6. No.05793-00045
Hazard at lifting or lowering window
When the front window is opened or closed, it will come close to the head. Be careful that the window does not strike the head.




7. No.05793-03630
Sign indicates a burn hazard from touching heated parts, such as engine, pump, or muffler during or right after operation.
Never touch when hot.




AM4A003E

8. No.03393-75040




9. No.03393-50070

Sign indicates a burn hazard from spurting hot water or oil if radiator or hydraulic tank is uncapped while hot.
Allow radiator or hydraulic tank to cool before removing cap.




10. No.03593-47020 (If equipped)




10. No.03293-00066 (If equipped)

When a bucket wider than a standard one is installed, the cab (canopy) may be damaged if the bucket is fully offset to the left.

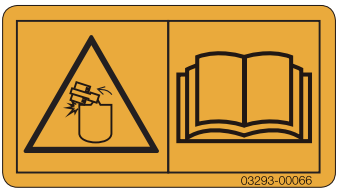


11. No.03593-13700

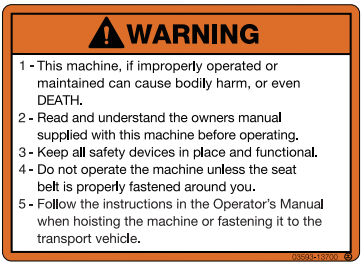


12. No.03993-00052

Position of Emergency Exit



13. No.03593-06600

Diesel fuel




14. No.03593-06700

Hydraulic oil




15. No.08810-31549

Tie down point



16. No.03393-00295

Position of hoisting



AM4A014EN

17. No.03993-00400
For EU
Position of Fire extinguisher




18. No.03593-32300 (If equipped)




19. No.03993-54628 (If equipped)
This value indicates the noise level outside the machine and refers to the noise perceived by the persons who are in the vicinity of the work area.

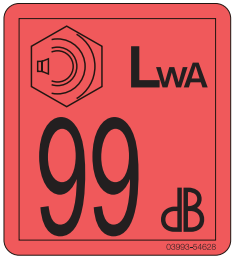


20. No.03793-69110 (If equipped)




WARNING!
Do not press the float switch while the machine is raised by the dozer blade. Doing so may cause the machine to fall.

21. No.05693-68009
Before starting lifting operation, be sure to turn on the lift overload warning switch.
An alarm sounds if an excessive weight is lifted.




22. No.05693-00090

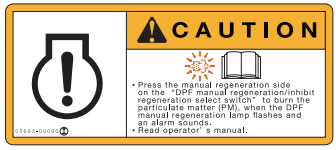


23. No.05693-00164 (If equipped)
For USA

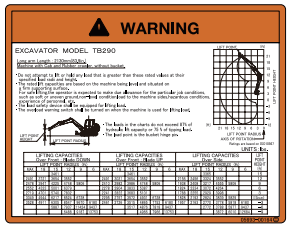


23. No.05693-00346 (If equipped)

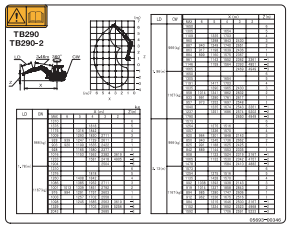


23. No.05693-00347 (If equipped)

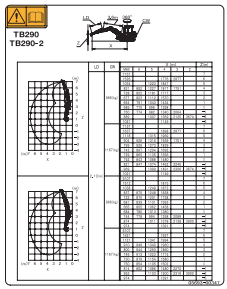


AM3A001E

# CONTROLS



# NAMES OF COMPONENTS

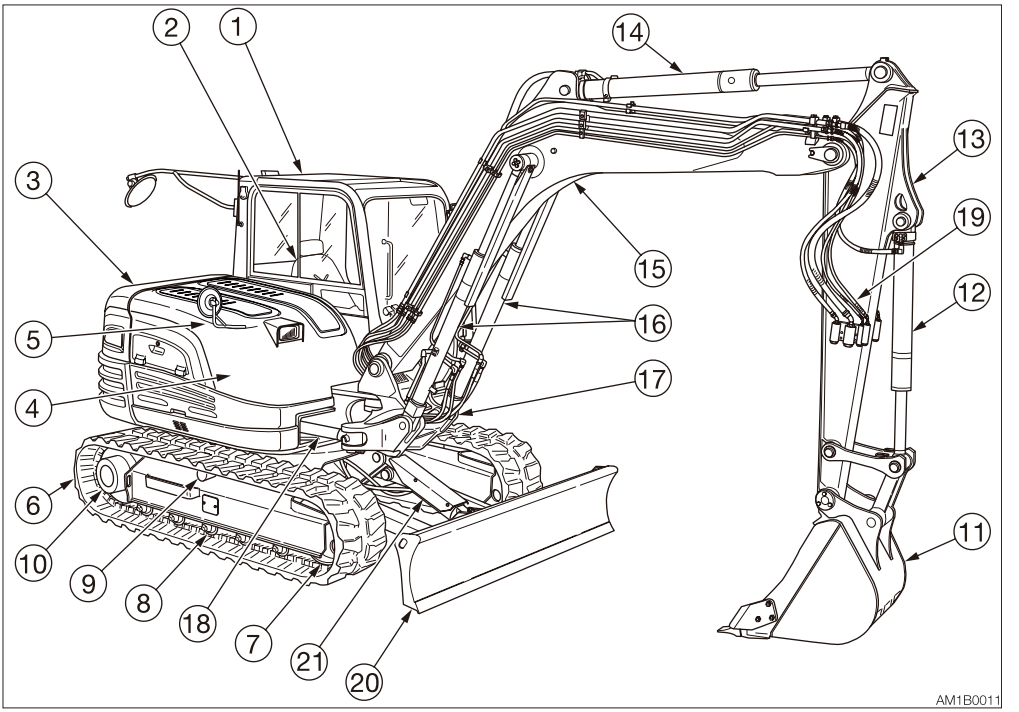


**Upperstructure**
1. Cab
2. Seat
3. Engine hood
4. Fuel tank
5. Hydraulic oil tank

**Undercarriage**
6. Crawler belt
7. Idler
8. Track roller
9. Carrier roller
10. Travel motor

**Working equipment**
11. Bucket
12. Bucket cylinder
13. Arm
14. Arm cylinder
15. Boom
16. Boom cylinder
17. Boom bracket
18. Swing cylinder
19. Auxiliary hydraulic lines
20. Dozer blade
21. Blade cylinder
22. Second boom
23. Second boom cylinder

**2-Piece boom**

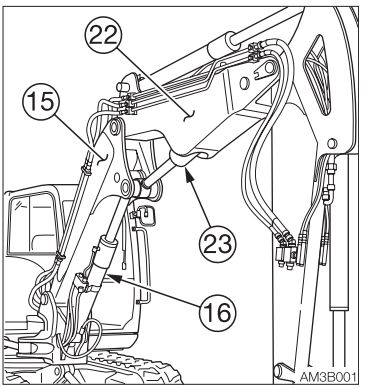

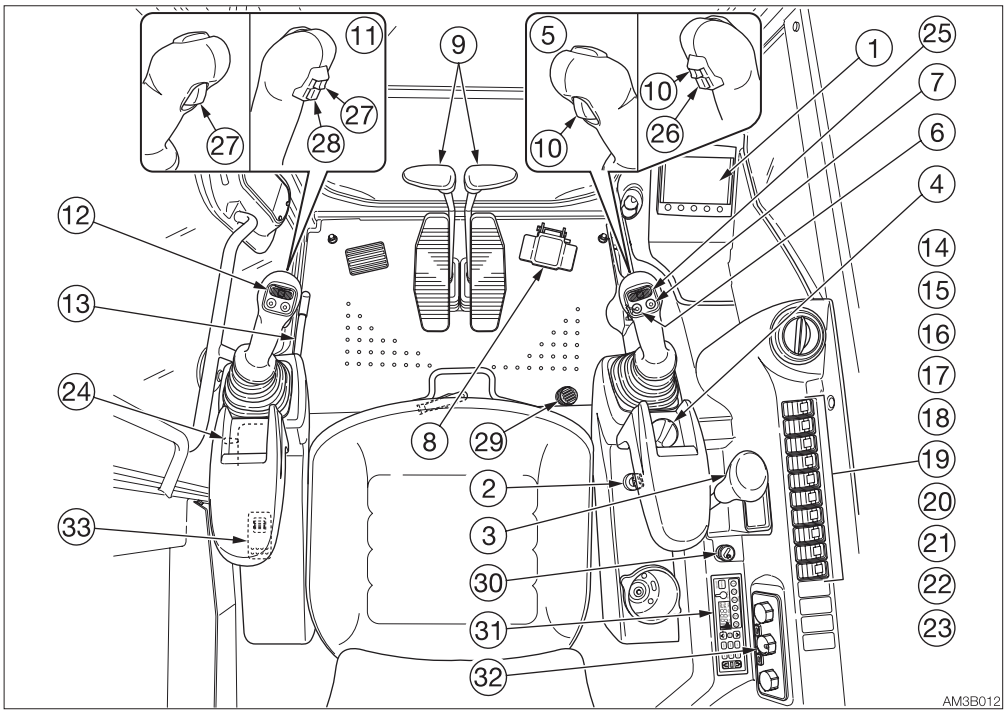


1. Multi-information display
2. Starter switch
3. Blade lever
4. Throttle controller
5. Right operating lever*
6. Horn button
7. Deceleration button
8. Boom swing/Second boom pedal
9. Travel levers/pedals
10. Travel speed button
11. Left operating lever*
12. Auxiliary 1st switches
13. Safety lock lever
14. DPF manual regeneration/inhibit select switch
15. Light switch
16. Wiper switch
17. Washer switch
18. Automatic deceleration switch
19. ECO/Highland mode switch
20. Detent mode switch
21. Auxiliary 1st auto tank switch*
22. Lift overload warning switch*
23. Beacon lamp switch*
24. Engine shutdown switch
25. Auxiliary 2nd/4th switch*
26. Auxiliary 2/4 select button*
27. Third auxiliary hydraulic button*
28. Swing/Second boom select button*
29. Third auxiliary hydraulic switch*
30. Cigarette lighter
31. Radio
32. AC Control panel
33. Third auxiliary hard-lock switch*

*: Subject to the specifications or optional products selected

# COVERS

## STARTER KEY

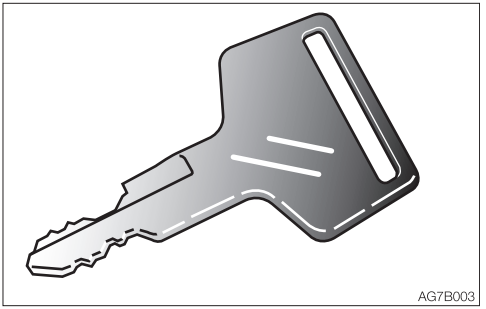


The starter key is used to start and stop the engine, as well as to lock and unlock the following components:
- Cab door
- Engine hood
- Covers

## SIDE COVER

**⚠ WARNING**

- **Stop the engine and allow the machine to cool down before performing maintenance.**
- **Do not keep the side cover open on a windy day or if the machine is parked on a slope.**
- **When opening and closing the side cover, be careful not to get your hands or other parts of your body caught by the cover.**

For inspection and maintenance of the hydraulic oil system, fuel system, coolant system or window washer, open this cover. The grease gun and the tools are also stored in the cover.

### Opening

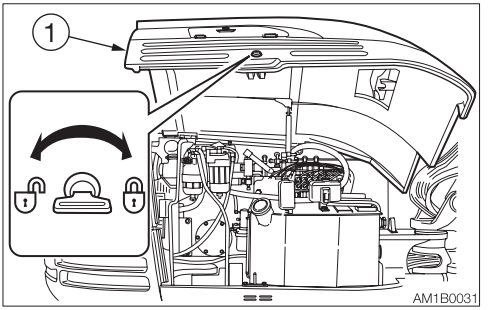


1. Insert the starter key and turn it counterclockwise to unlock the side cover (1).
2. Push in the key hole with your thumb and open the side cover (1) all the way.
3. Store the tools.

### Closing

1. Close the side cover (1) and press it down until a click is heard.
2. Insert the starter key and turn it clockwise to lock the side cover (1).

### Stopper

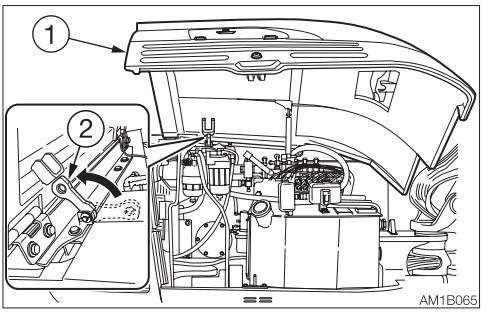


When it is necessary to leave the side cover (1) open for a long time for servicing or inspecting, use the stopper (2) to prevent the side cover (1) from closing.

## FUEL LID

**⚠ CAUTION**

**When opening and closing the fuel lid, be careful not to get your hands caught by the lid.**

For adding fuel or checking the level of hydraulic oil or coolant, open this cover.

### Opening

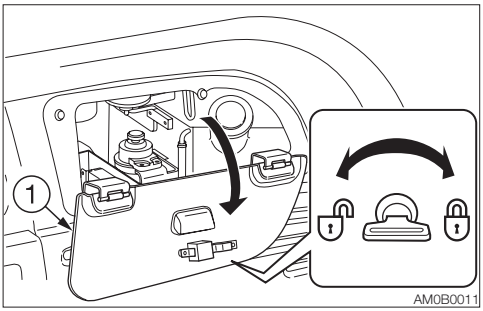


1. Insert the starter key and turn it counterclockwise to unlock the fuel lid (1).
2. Remove the starter key, push in the key hole with your thumb and open the fuel lid (1) all the way until it stops.

### Closing

1. Close the fuel lid (1).
2. Insert the starter key and turn it clockwise to lock the fuel lid (1).

## FUEL FILLER PORT

**⚠ WARNING**

- **Do not smoke and keep away from heat or flame while filling the fuel tank.**
- **Fill the fuel tank in a well ventilated place, with the engine turned off.**
- **Clean up spilled fuel immediately.**
- **Do not fill the fuel tank to capacity. Allow room for oil expansion.**
- **Securely tighten the fuel filler cap.**

### Opening

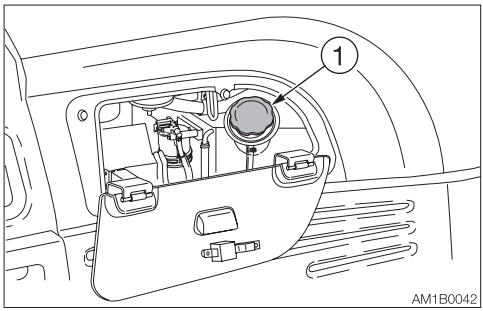


1. Open the fuel lid.
2. Turn the fuel cap (1) counterclockwise and remove it.

### Closing

1. Turn the fuel cap (1) it clockwise and close it.
2. Close the fuel lid and lock it.

## ENGINE HOOD

**⚠ WARNING**

- **Before opening the engine hood, be sure to stop the engine. If a hand or tool becomes trapped in the rotating or moving part, serious injury could result.**
- **Do not leave the engine hood open on a windy day or if the machine is parked on a slope.**
- **When opening or closing the engine hood, be careful not to get your hands or other parts of your body caught by it.**

### Opening

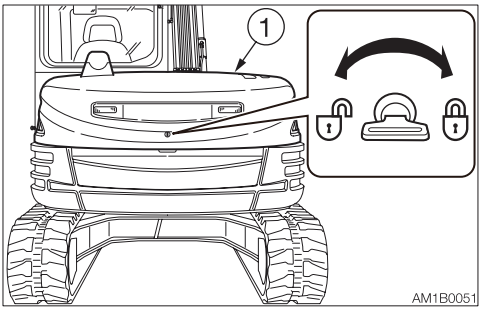


1. Insert the starter key and turn it counterclockwise to unlock the engine hood (1).
2. Push in the key hole with your thumb and open the engine hood (1).

### Closing

1. Close the engine hood (1) and press down the edge of it until a click is heard.
2. Insert the starter key and turn it clockwise to lock the engine hood (1).

## FUSE BOX COVER

For inspection and maintenance of the fuse or air conditioner filter, open this cover. The port for connecting to a computer is inside the box.

### Opening

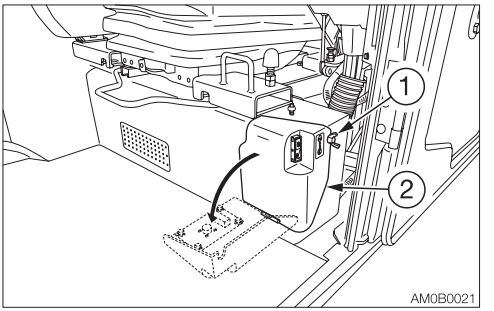


1. Remove the wing bolt (1).
2. Tilt the fuse box cover (2) forward.

### Closing

1. Close the fuse box cover (2) and secure it with the wing bolt (1).

# CAB

## CAB DOOR

**⚠ WARNING**

**When getting on or off the cab, first open the door all the way until it is secured in the catch and check that it does not move.**

Open the door fully and press it against the catch at the back of the door to secure it in place.
The door must be locked when getting on or off the machine and while in operation.

### Locking and unlocking

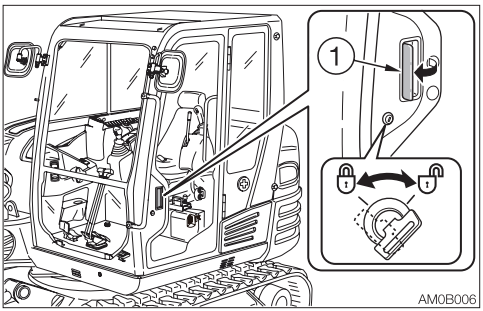


Insert the starter key and turn it.

### Opening

1. Pull the knob (1) towards you and open the door.

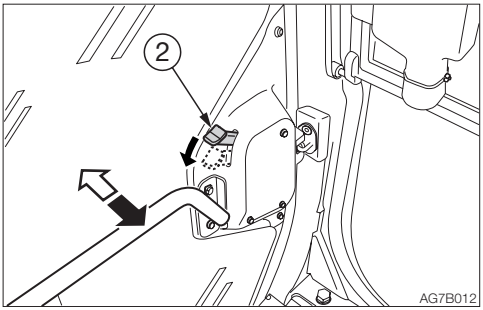


To open the door from inside the cab, push the lever (2) to the lower.

2. Open the door fully and press it against the cab to secure it in place.

### Closing

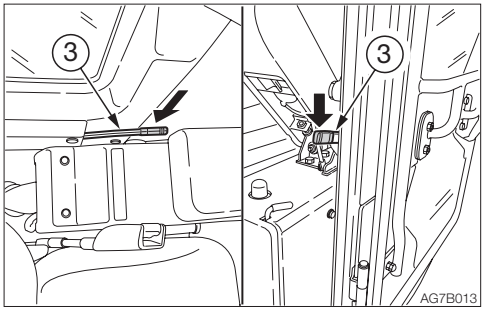


1. Push the release lever (3) to the lower.
2. Close the released door.

## EMERGENCY EXIT

### Front window (excluding machines with a front guard)

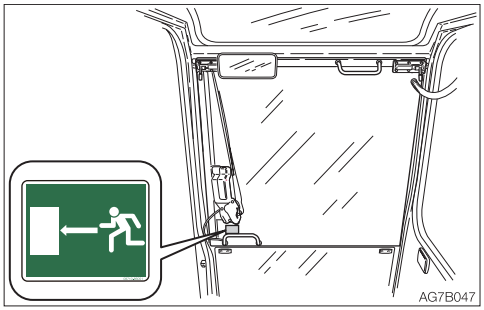


If you should become trapped inside the cab, open the front window to get out.

## FRONT WINDOW

**⚠ WARNING**

- **Grasp the handles firmly with both hands when opening and closing the front window. Your head or hands may get caught if it slips from your hands.**
- **When the front window is opened or closed, it will come close to the head. Be careful that the window does not strike the head.**
- **When you open the front window, be sure to lock it in place with the lock pins on the left and right sides. The window may fall if it is not locked in place.**

### Opening

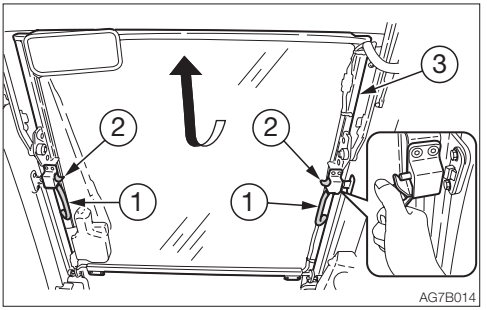


1. Park on a level surface and stop the engine.
2. Set the safety lock lever to the locked position.
3. Grasp the left and right handles (1) and press the knobs (2) with your thumb to release the lock.
4. Pull the front window (3) toward you and lift while doing so.

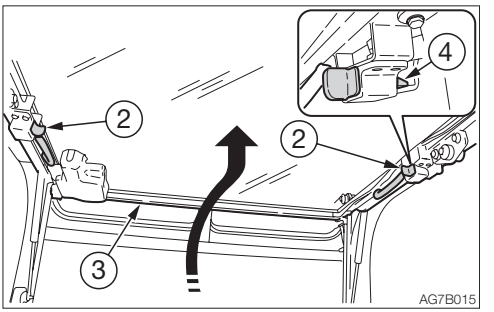


5. Release your thumb from the knobs (2) and then lift the front window (3) fully and lock the front window with lock pin (4).

### Closing

**⚠ WARNING**

**When closing the front window slowly so as not to hit your head. Lowering the window abruptly may result injury or damage the front window.**

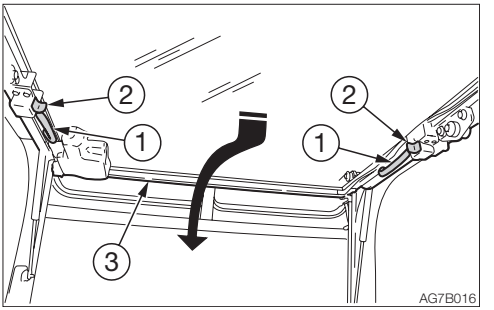


1. Grasp the left and right handles (1) and press the knobs (2) with your thumb to release the lock.
2. Pull down the front window (3) and while doing so, slide it to the front and slowly lower it.

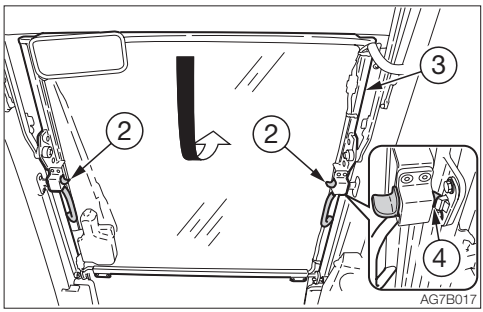


3. Release your thumb from the knobs (2) and then press the front window toward front and lock the front window with lock pin (4).

## LOWER FRONT WINDOW

### Removing

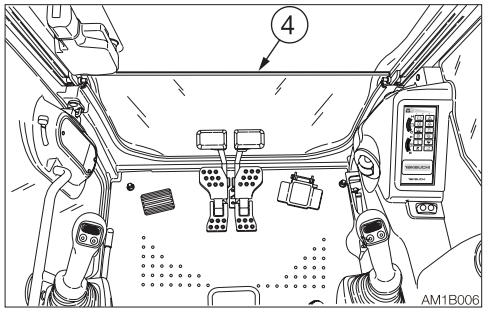


1. Open the front window and stow it in the ceiling.
2. Slowly lift the lower front window (4).

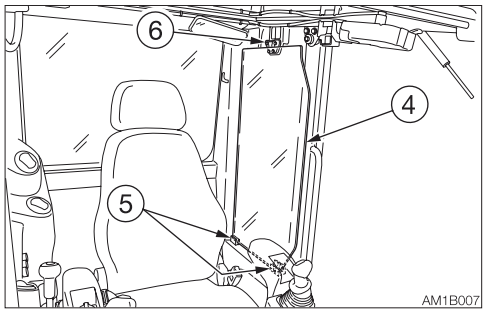


3. Hold the window in a vertical position (the bottom of the window should be in front of you), place it through the guide (5) on the left side of the cab, and then secure it with the support (6).

## SIDE WINDOW

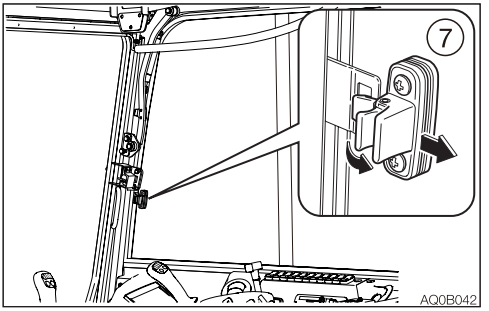


1. Grasp the catch (7), unlock it and open the side window.
2. To close the side window, close it until a click is heard.

## SUN SHADE

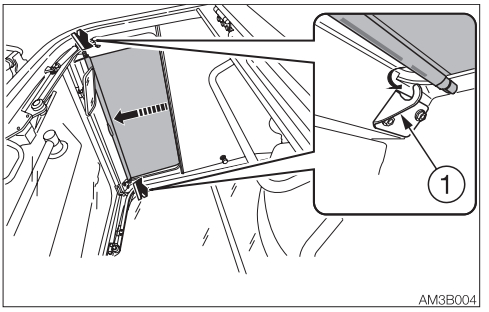


1. Pull out the sun shade forward.
2. Hook the sun shade to the two catches (1)

## EMERGENCY HAMMER (OPTIONAL)

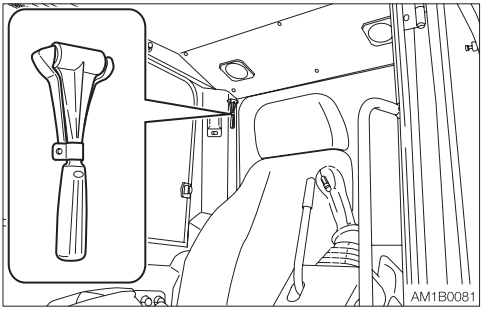


An emergency hammer is installed to be used to escape from the cab in an emergency. When escaping, break the windows with the hammer.

- When breaking the windowpane with a hammer, take great care not to injure yourself with the broken glass pieces.
- Remove the glass pieces from the window sill so as not to cut yourself when evacuating. Broken glass will fall from the window, so be careful of your footing and do not slip on the glass.

# SEAT AND SEAT BELT

## SEAT

**⚠ WARNING**

- **Adjust and secure the seat.**
- **Do not make any adjustments while operating the machine.**
- **Do not set the backrest to its maximum reclining position and slide the seat backwards at the same time. Doing so may damage the rear window or cause injury.**
- **Remember that the backrest returns to the forward position abruptly due to the spring force.**

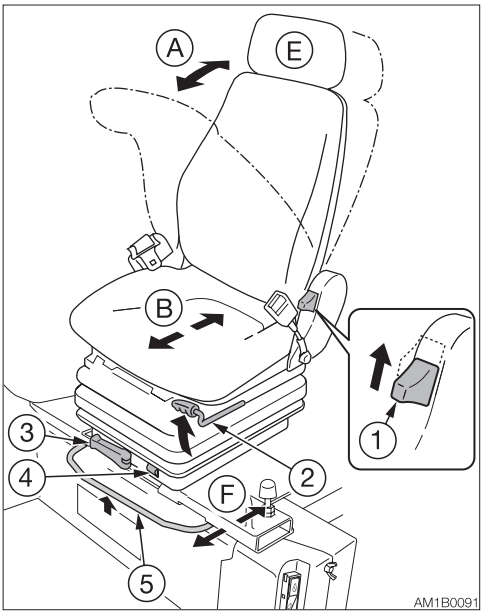


**(A) Adjusting the backrest angle**

1. Sit up and sit back in the seat.
2. Pull up the lever (1), recline the backrest by using the spring force. Release the lever (1) at the desired angle to secure the backrest.

**(B) Fore-and-aft adjustment**

1. Pull up the lever (2) and slide the seat backward or forward to the desired position for operation of machine.
2. Release the lever (2) at the desired position to secure the seat.
   Adjustment range: 15 positions, in 150 mm (5.9 in.)

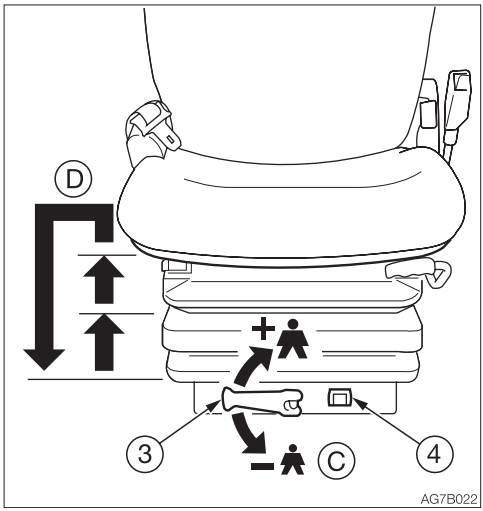


**(C) Adjusting according to operator's weight**

1. Turn the handle (3) until the scale (4) indicates the weight of operator.
   Adjustment range: 50 to 130 kg (110 to 287 lbs)

**(D) Adjusting the height of the seat**

Upward

1. Lift the seat to first or second position click-stop.
   Adjustment ranges: 2 positions, in 60 mm (2.36 in.)

Downward

1. First lift the seat to highest position, then the seat can be lowered to lowest position.

**(E) Adjusting the headrest (Option)**

The headrest (E) can be moved upward or downward.

1. Grab the headrest (E) with both hands, and move upward or downward to the desired position.

**(F) Adjusting the operating lever stand**

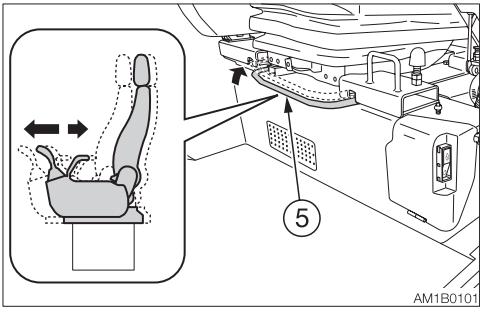


1. Pull up the lever (5) and slide the lever stand (seat).
2. Release the lever (5) at the desired angle to secure the lever stand (seat).
   Adjustment range: 9 positions, in 90 mm (3.5 in.)

## SEAT BELT

**⚠ WARNING**

**Be sure to fasten the seat belt securely before starting the engine.**

### Fastening the seat belt

1. Adjust the seat to the desired position for operation, sit up and sit back in the chair.
2. Pull the seat belt to the desired length.

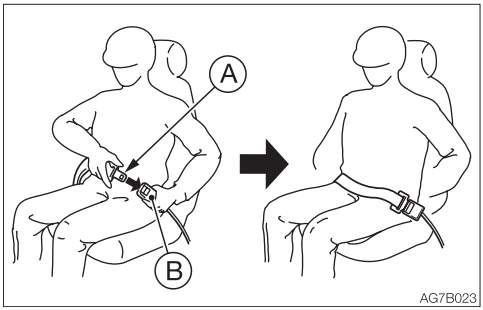


3. Make sure that the belt is not twisted and then insert the tongue plate (A) into the buckle (B) of the seat belt until you hear a clicking sound as it locks in place.
4. Check if the belt is securely locked by pulling it, and arrange the belt around your waist.

### Releasing the seat belt

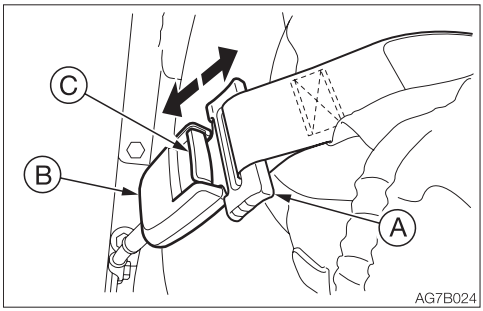


1. Grasp the tongue plate (A) and press the button (C) on the buckle (B).
   The seat belt retracts back into its original position.

## AIR SUSPENSION SEAT

**⚠ WARNING**

- **Adjust and secure the seat.**
- **Do not make any adjustments while operating the machine.**
- **Do not set the backrest to its maximum reclining position and slide the seat backwards at the same time. Doing so may damage the rear window or cause injury.**
- **Remember that the backrest returns to the forward position abruptly due to the spring force.**

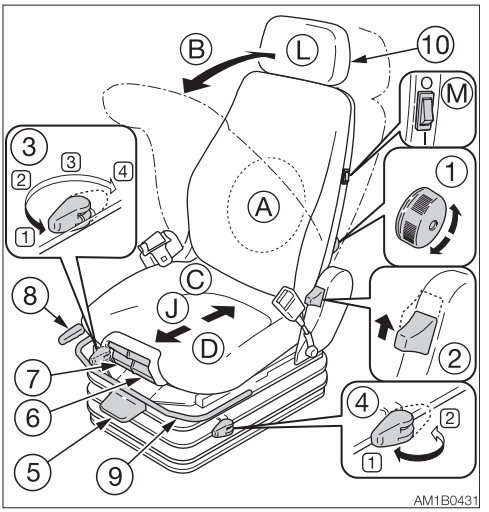


**(A) Adjusting the lumber support**

1. Turning the knob (1) in the direction of the arrow causes the lumber of the backrest to curve outwards.
2. Turning the knob (1) further removes the curve and returns the seat to its original position.

**(B) Adjusting the backrest angle**

1. Sit up and sit back in the chair.
2. Pull up the lever (2), adjust the backrest rear angle by using the spring force on the chair back. Release the lever (2) at the desired angle to secure the backrest.

**(C) Adjusting the absorber**

The seat adjustment using the absorber is applicable for various traveling conditions on roads or off roads. The cushioning effect can be individually set for each case.
Turn the lever (3) to the desired position and release.

Positions between
1: Soft cushioning
and
4: Hard cushioning

**(D) The fore/aft isolator**

It is activated under certain conditions such as crashing. Impacts of crash applied in the operating direction can be well absorbed by the operator's seat. Switching can be done with the lever (4).

Position 1: Fore/aft isolator on
Position 2: Fore/aft isolator off

**(E) Adjusting according to operator's weight**

**IMPORTANT: Before performing the adjustment by weight, stop the machine and remain seated. Otherwise, the weight cannot be detected, resulting in malfunction.**
**IMPORTANT: Be sure to set the absorber to the soft cushioning position (1) when performing the adjustment by weight.**

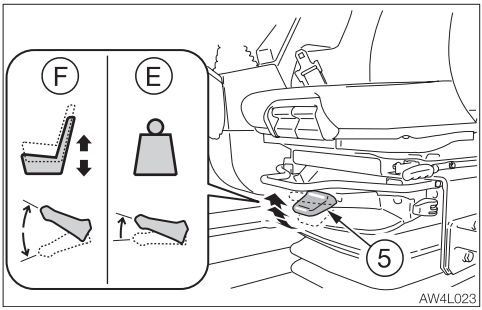


The seat should be adjusted according to the operator's weight. Briefly pull the actuator lever (5) of the automatic weight and height adjuster.

**(F) Adjusting the seat height**

**IMPORTANT: Be sure to set the absorber to the soft position (1) when performing the height adjustment.**
**IMPORTANT: Do not operate the lever (5) (compressor) for one minute or more. Doing so will cause compressor failure. To protect the compressor, wait for at least three minutes before operating the lever (5) again.**
**IMPORTANT: If the height adjustment function fails, first lower the seat to the lowest position. Then, adjust the height again.**

The seat height can be steplessly adjusted using the pneumatic mechanism.

To adjust, push up or push down the lever (5) all the way up or down. When the seat reaches the level where it cannot be raised anymore even the lever (5) is pushed up, that level is the highest. If this happens, the height is automatically lowered a small distance to maintain the stroke of suspension.
Adjustment stroke: 80 mm (3.1 in.)

**(G) Adjusting the seat pan angle**

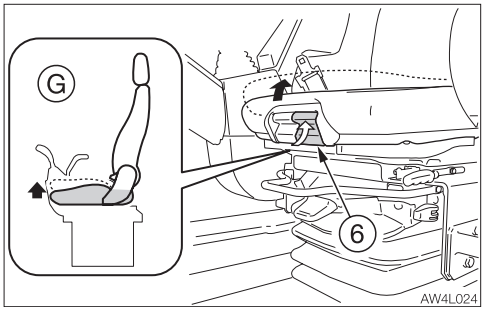


The angle of the seat pan can be individually adjusted.
To adjust, lift the left side handle (6). Use the pressure applied to the seat to set the seat pan to the desired angle.

**(H) Adjusting the seat depth**

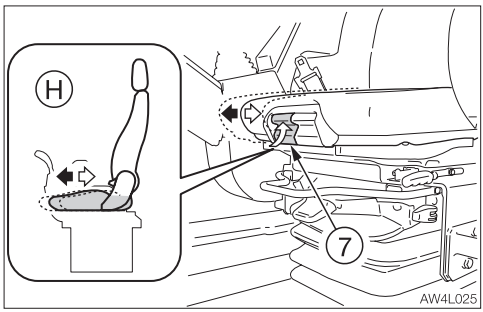


The depth of the seat pan can be individually adjusted.
To adjust, lift the right side handle (7). Move the seat cushion forward or backward until the desired seat depth is obtained.

### (J) Adjusting fore-and-aft

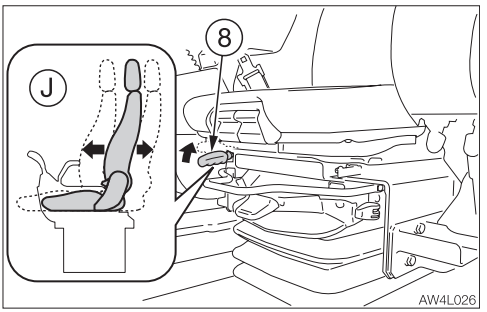


1. Pull up the lever (8) and slide the seat backward or forward to the optimum position for operation.
2. Release the lever (8) at the optimum position to secure the seat.
   Adjustment range: 17 positions, in 170 mm (6.7 in.)

### (K) Adjusting the operating lever stand

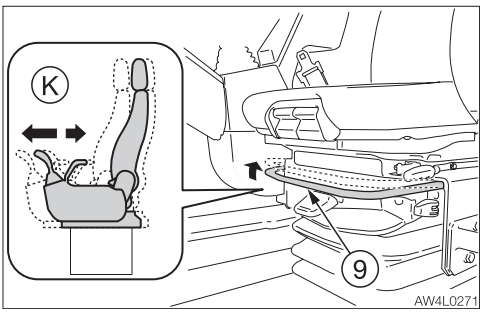


1. Pull up the lever (9) and slide the lever stand (seat).
2. Release the lever (9) at the optimum position to secure the lever stand (seat).
   Adjustment range: 9 positions, in 90 mm (3.5 in.)

### (L) Adjusting the headrest height

1. Grab the headrest (10) with both hands, and move upward and downward. Adjust the height so that the headrest center is positioned behind your ears.

### (M) Seat heater

**⚠ CAUTION**

- **Using the seat heater over an extended period of time may cause burns. People feeling ill or having sensitive skin, in particular, should be careful not to do so.**
- **Do not use it with a blanket or cushion placed on the seat.**
- **Clean up spilled water or soft drink immediately with a dry cloth. Dry the seat well before using the heater again.**

**IMPORTANT: The battery voltage becomes low if the seat heater is left on for a long time when the engine is stopped.**

O.....OFF
I.....ON

# MEMO

# MULTI-INFORMATION DISPLAY

## HOME SCREEN

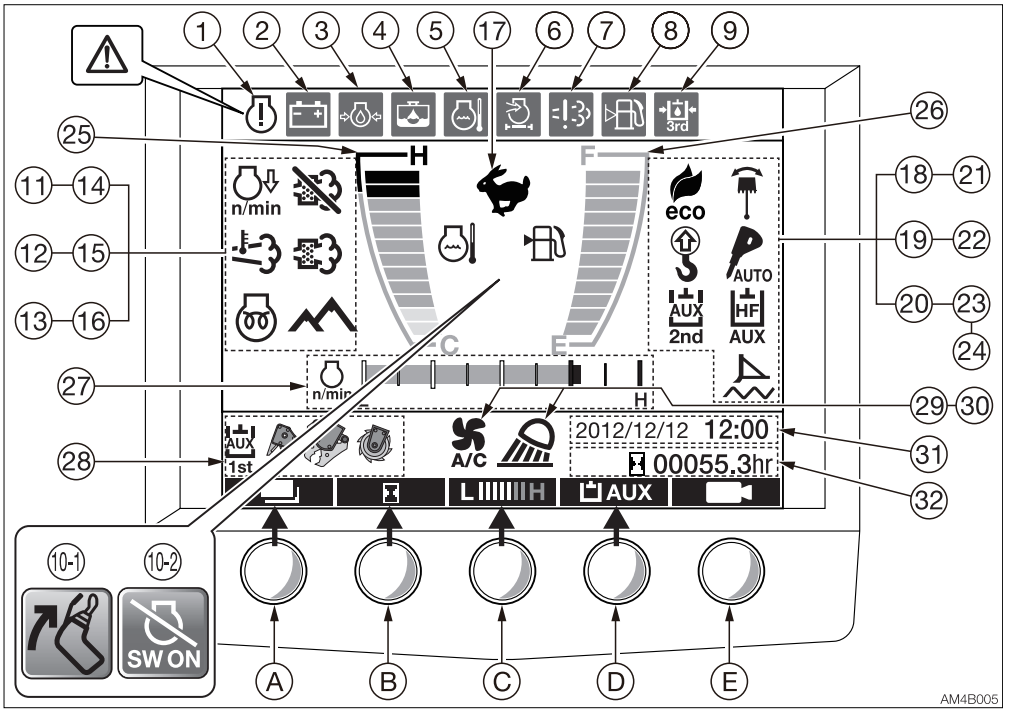


For explanation purposes, all lamps on this page are in the lit condition. This screen image is quite different from that of the real operation. In the actual operation, if a warning is given or any function is selected, the corresponding symbol appears enlarged at the center of the display for approx. one second.

When the starter switch is set to ON, the battery charge warning lamp and the engine oil pressure warning lamp first appear enlarged, and then turn on with an alarm at their original locations. The machine system is normal if the lamps turn off after the engine is started.

## WARNING LAMPS

**IMPORTANT: If a warning lamp flashes and an alarm is sounded, immediately stop all operations and check the corresponding component.**
**Refer to "If a warning lamp flashes" on pages 6-10 and 6-11.**

**1. ECM error warning lamp**
This warning lamp flashes if the Electronic Control Module (ECM) detects an engine problem while the starter switch is in the ON position. The problem detected is recorded as an ECM error.
Refer to "Engine error code list" on pages 6-14 to 6-21.

**1-1. Vehicle and engine emergency lamp**
This lamp is displayed enlarged for one second, and then flashes and an alarm sounds if there is a problem with the machine. Go to the error code display from the Menu screen, get the vehicle or engine error code number, and consult your sales or service dealer referring to the "Vehicle error code list" or "Engine error code list" in this manual.
Refer to "Menu screen" on page 2-27.
Refer to "(6) Error code display" on page 2-33.
Refer to "Vehicle error code list" on pages 6-12 to 6-13.
Refer to "Engine error code list" on pages 6-14 to 6-21.

**2. Battery charge warning lamp**
This lamp flashes and an alarm is sounded if a problem rises in the charging system while the engine is running.

**3. Engine oil pressure warning lamp**
This lamp flashes and an alarm is sounded if the lubricant oil pressure abnormally low while the engine is running.

**4. Water separator warning lamp**
This lamp flashes if the water is detected within the water separator while the starter switch is in the ON position.

**5. Coolant temperature warning lamp**
This lamp flashes and an alarm is sounded if the engine coolant temperature becomes abnormally high while the engine is running.

**6. Air cleaner warning lamp**
This lamp flashes and an alarm is sounded if the air cleaner filter is clogged while the engine is running.

**7. NCD warning lamp**
This lamp flashes and an alarm is sounded if the NOx control detects any error.
NCD: NOx Control Diagnostic system

**8. Fuel level warning lamp**
This lamp flashes when the fuel level is low while the starter switch is in the ON position.

**9. Third auxiliary hydraulic warning lamp**
This lamp starts flashing and an alarm sounds if the fixed side (left "e") pressure of the auxiliary 3rd drops abnormally while the engine is running, or while the quick-hitch is being removed or installed.

### 10-1. Safety start warning lamp

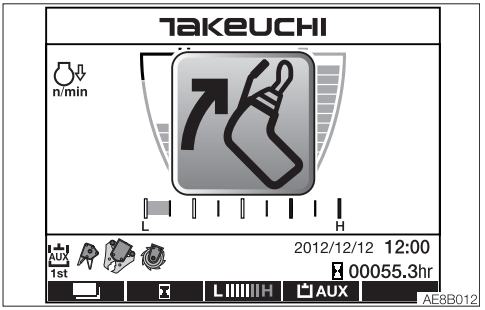


This lamp appears enlarged on the display and an alarm sounds if the engine is started when the safety lock lever is in the unlock position. The engine cannot be started. First, set the safety lock lever to the lock position, and then start the engine.

### 10-2. Engine shutdown switch warning lamp (If equipped)

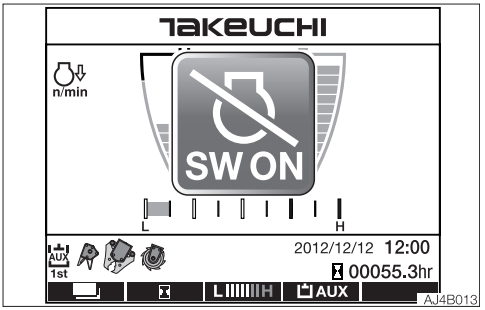


This warning lamp appears enlarged on the display and an alarm sounds if the engine is started when the engine shutdown switch is ON. The engine cannot be started. First, turn off the engine shutdown switch, and then start the engine.

## INDICATORS

### 11. Deceleration indicator lamp

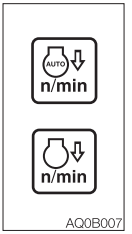


..... Automatic deceleration indicator

..... Deceleration indicator

**Automatic deceleration indicator**
It flashes when the automatic deceleration switch is pressed and remains lit while in the deceleration mode.
Refer to “Deceleration button” on page 2-38.
Refer to “Automatic deceleration switch” on page 2-43.

**Deceleration indicator**
This lamp turns on when the deceleration button is pressed. The lamp lights up to indicate that the engine is in the deceleration mode at low idling speed.

### 12. Exhaust temperature warning indicator lamp
This indicator lights up to warn if the exhaust temperature is abnormally increased. Check for any flammable items around the exhaust piping.

### 13. Glow indicator lamp
This indicator lamp turns off when the engine preheating is completed.

**14. DPF auto regeneration/inhibit indicator lamp**

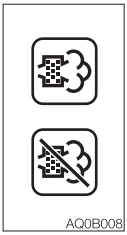


..... DPF auto regeneration under way

..... DPF auto regeneration inhibit

**DPF auto regeneration under way**
The DPF regeneration is automatically performed by the engine, when certain criteria are met. The operator only has to check the display.

**DPF auto regeneration inhibit**
The DPF manual regeneration inhibit symbol appears on the display when the DPF manual regeneration under way or the DPF auto regeneration under way is cancelled.
Refer to “DPF manual regeneration/ inhibit select switch” on page 2-41.

**15. DPF manual regeneration under way/ regeneration promoting indicator lamp**
The indicator starts flashing and an alarm starts sounding, if the accumulated PM exceeds the limited amount on the DPF. Immediately perform the manual DPF regeneration.
Refer to “DPF manual regeneration/ inhibit select switch” on page 2-41.

**16. Highland mode indicator lamp**
Highland mode is selected.
Refer to “ECO/Highland mode switch” on page 2-44.

**17. Travel speed indicator lamp**

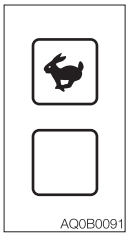


..... High-speed travel

..... Low-speed travel

This lamp turns on when the travel speed button is set to the 2nd (high) speed.

**18. ECO mode indicator lamp**
This lamp lights up when the ECO mode side of the ECO/Highland mode select switch is pressed. The machine drives with reduced RPM for lower fuel consumption, without compromising workability.

**19. Lift overload warning indicator lamp**
This lamp turns on when the lift overload warning switch is turned on.

**20. Auxiliary 2nd/4th select indicator lamp**

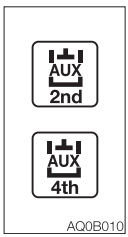


..... Auxiliary 2nd is selected.

..... Auxiliary 4th is selected.

**21. Swing/Second boom indicator lamp**




..... Swing is selected.

..... Second boom is selected.

**22. Auxiliary 1st one-way (one-way circuit) indicator lamp**




..... Auxiliary 1st auto tank is selected.

..... Auxiliary 1st one-way is selected.

No display: ....Two-way (two-way circuit) is selected.

**23. High-flow indicator lamp**

This lamp flashes and then stays lit when the auxiliary 1st flow rate is set to high-flow.
It also flashes when the high-flow setting is changed.

**24. Dozer blade float indicator lamp (If equipped)**




This lamp lights up when the float switch on the blade lever is pressed.

**25. Water temperature gauge**

Indicates the temperature of the engine coolant water. The indicator level must be within the green range during machine operation. The red range indicates overheating.

**26. Fuel gauge**

Indicates the amount of fuel in the tank. Be sure to fill up the tank before running out of fuel.

### 27. Throttle opening position indicator

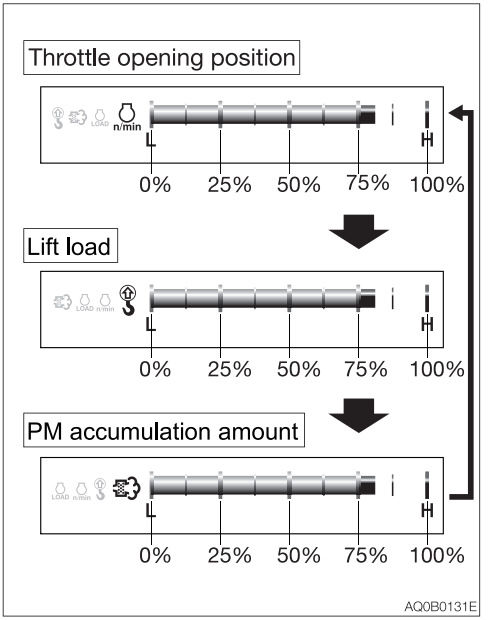


This gauge displays the load condition of the work. When the gauge is in the green range, the work load is light to medium. When the gauge is in the red range (75% or more), the work load is high. When the button (C) (Bar meter key) is pressed in a normal screen, the display is changed from the engine load factor to the throttle opening position, the lift load factor, and the PM accumulation amount, in this order

**Note:** The machine is not faulty if the gauge is in the red range. Operating the machine with the gauge being in the green range is energy-saving and will help conserve the global environment.

- The lift load factor is displayed if there is no change in the throttle opening position for five seconds after the lift alarm switch is turned on.
- The throttle opening position is displayed if the highland mode switch is turned on or there is a change in the throttle opening position.

**28. Auxiliary 1st flow rate indicator lamp**
This lamp lights up to indicate which flow rate setting is selected in the auxiliary 1st.

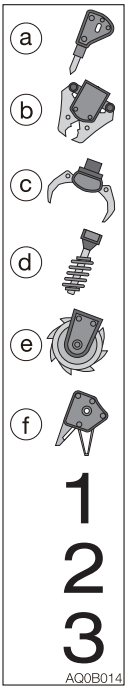


..... a Flow rate setting 1
..... b Flow rate setting 2
..... c Flow rate setting 3
..... d Flow rate setting 4
..... e Flow rate setting 5
..... f Flow rate setting 6
..... 1 Flow rate setting 7
..... 2 Flow rate setting 8
..... 3 Flow rate setting 9

Refer to “Auxiliary 1st flow rate setting” on page 2-29.

**29. Air conditioner indicator lamp**
Lights up while the air conditioner is operating.

**30. Working light indicator**
Lights up when the working light is turned on.

**31. Date and time indicator**

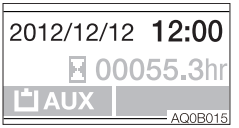


Displays the date and time set.
Refer to “Date and time setting” on page 2-32.

**32. Hour meter/Trip meter**
**• Hour meter**

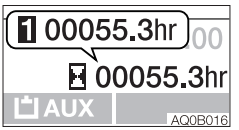


Displays the total engine running time in hours.
The rightmost digit indicates tenths of hours (6 minutes).
Set the inspection and maintenance intervals according to the time displayed on the hour meter.

**• Trip meter**
Three patterns of desired operating hours can be displayed.
Refer to “Trip meter setting” on page 2-28.

## SCREEN CONTROL KEY

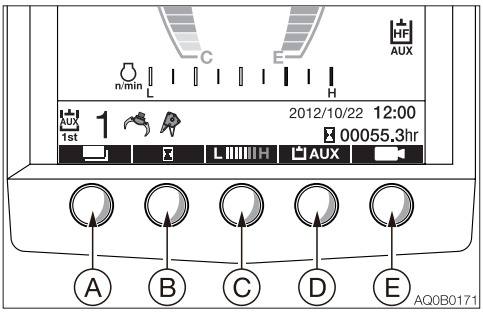


**Note:** Do not press the symbol keys on the display. The LCD could be damaged if the symbol keys are pressed hard. For actual operation, press the push button keys located at the bottom of the screen.

**A. Menu key**

Use this key to switch between the Home screen and the Menu screen. This key is also used to cancel changes made in each setting. The screen returns to the Home screen if this key is pressed in the information screen.

**B. Hour meter key**

This hour meter symbol is displayed in the initial screen. Pressing this key changes the meter display in the following order. Trip meter 1, Trip meter 2, Trip meter 3, Hour meter.

Down (↓) key
Use this key to move the cursor ▶ downward and to decrease the value in each setting. Press and hold this key for one second to rapidly decrease the value.

**C. Bar meter key**

This bar meter symbol is displayed in the initial screen. Pressing this key changes the meter display in the following order. Throttle opening position, Lift load factor, PM accumulation amount

Up (↑) key
Use this key to move the cursor ▶ upward and to increase the value in each setting. Press and hold this key for one second to rapidly increase the value.

**D. Auxiliary 1st key**

The auxiliary 1st symbol is displayed in the initial screen. Pressing this key changes the symbol display in the following order. Auxiliary 1st setting 1, Auxiliary 1st setting 2, Auxiliary 1st setting 3.

Enter key
Use this key to confirm or execute the setting made by each key.
To clear the trip meter being displayed, press and hold this key for three seconds.

**E. Camera image key**

**⚠ WARNING**

**Do not look at the images produced by the camera when traveling in reverse. Move in reverse while visually looking at the direction of travel.**

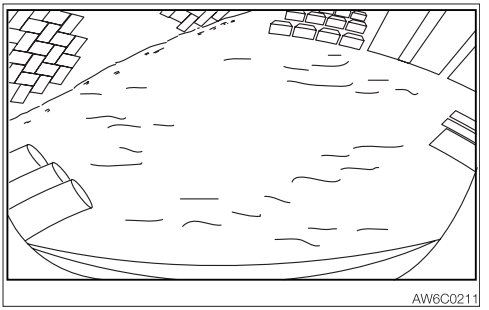


1. Press the Camera key in the Home screen to display the images taken by the rear camera.
2. Press the Camera key again or other key to return to the Home screen.

## SCREEN NAVIGATION

• Menu screen

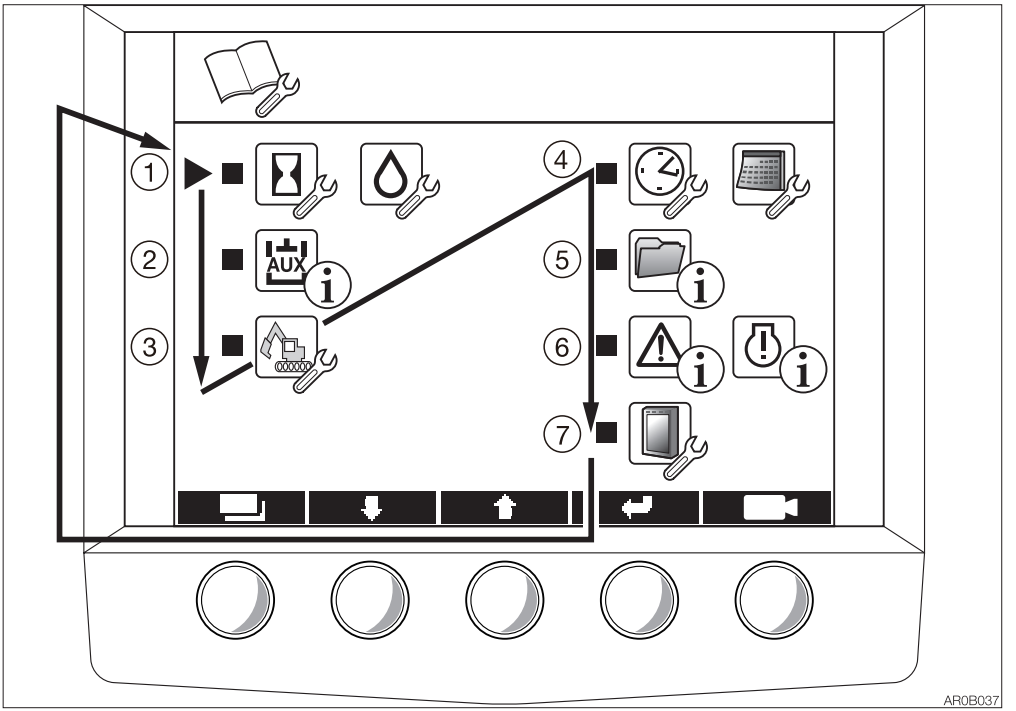


Press the Menu key to go the Menu screen while in the Home screen.

(1) Trip meter setting
(2) Auxiliary line flow rate display
(3) Machine settings
(4) Date and time setting
(5) Data display
(6) Error code display
(7) LCD setting
Move the cursor ▶ with the Up ( ↑ ) or Down ( ↓ ) key to go to the desired item to be set, and then press the Enter key to confirm. The screen returns to the Home screen if the Menu key is pressed on the Menu screen.
The wrench symbol indicates the “setting is possible state” and the ( i ) mark indicates information only.

## (1) TRIP METER SETTING

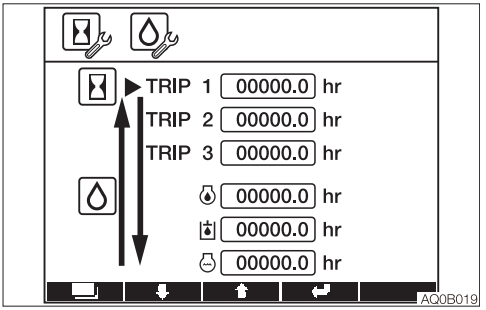


Six patterns of desired operating hours can be set.
Press the Menu key to return to the Menu screen.
Move the cursor ▶ with the Up (↑) or Down (↓) key, and press and hold the Enter key for three seconds to clear the flashing trip meter pointed by the cursor.

## (2) AUXILIARY LINE FLOW RATE DISPLAY

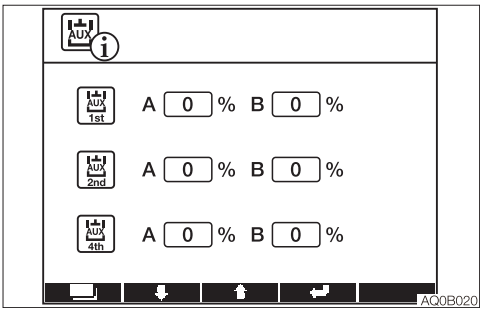


Displays the flow rate of the Auxiliary 1st, 2nd and 4th.
The flow rate cannot be changed.

## (3) MACHINE SETTINGS

• **Machine setting screen**

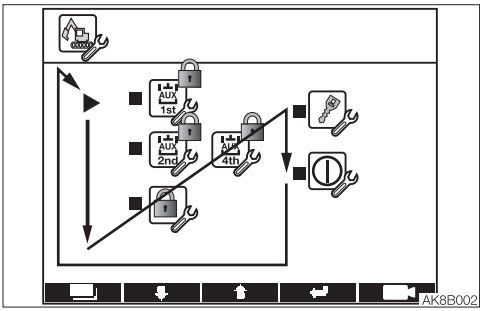


The settings made to the machine can be changed. Move the cursor ▶ with the Up (↑) or Down (↓) key to go to the desired item to be set, and then press the Enter key to confirm.
To return to the Menu screen, press the Menu key.

**Note:** When the auxiliary flow rate locking is set to “enabled”, the “Lock” symbol is added to the upper right of the “auxiliary flow rate setting” symbol.
You are requested to enter the password when setting the auxiliary flow rate, locking/unlocking the auxiliary flow rate or changing the password.

• **Requesting password screen**

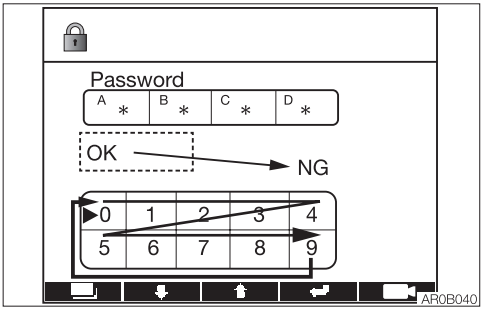


When the “closed-lock” symbol is displayed, it is necessary to enter the password to set the auxiliary flow rate, lock/unlock the auxiliary flow rate or change the password. Move the cursor ▶ with the Up (↑) or Down (↓) key, and press the Enter key to enter a 4-digit number password. Enter the existing password. If it is correct, “OK” will be displayed followed by the setting screen. If it is not, “NG” will be displayed followed by the machine setting screen.
It is not necessary to enter the password again unless you want to change it or until you turn the ignition switch to OFF.

**1. Auxiliary 1st flow rate setting**

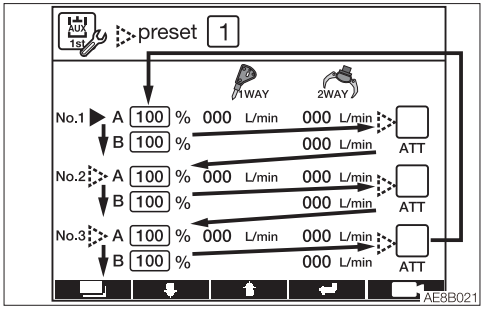


For the auxiliary 1st flow rate, there are four patterns to choose from.
The three patterns shown on the display can be selected from the Home screen.
For the preset, select from 1 through 4.
To return to the machine setting screen, press the Menu key.
Use the Up (↑) or Down (↓) key to move the cursor ▶, and then press the Enter key to flash the number to be edited. To cancel editing, press the Menu key.
Use the Up (↑) or Down (↓) key to change the value, and then press the Enter key again to complete editing.
**Note:** The flow rates differ with different specifications.

**Initial condition**

| No. | Standard flow |
|---|---|
| 1 | 100%=71 L/min (18.9 US gpm)<br>100%=86 L/min (22.7 US gpm) |
| 2 | 75%=54 L/min (14.2 US gpm)<br>75%=65 L/min (17.2 US gpm) |
| 3 | 50%=36 L/min (9.4 US gpm)<br>50%=43 L/min (11.4 US gpm) |

Variable range: 10 to 100%

### Maximum flow rate

| No. | High-flow |
|---|---|
| 1 | 140%=100 L/min (26.4 US gpm)<br>140%=120 L/min (31.7 US gpm) |

Variable range: 101 to 140%

**Note:** The table shows the 1-way flow rate when there is no load.
**Note:** The 1-way flow can be performed only when the switch (A) is used.

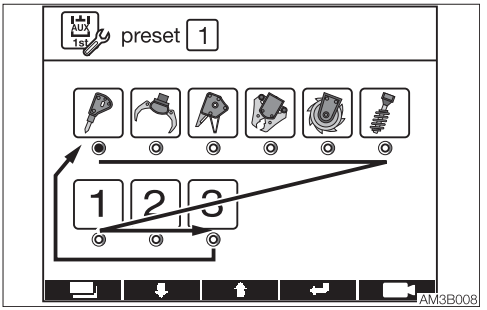


Pressing the Enter key while the cursor ▶ is at “ATT” goes to the attachment select screen.
Pressing the Down (↓) key moves the cursor ◉ in the direction of the arrow.
Use the Up (↑) key to move the cursor ◉ in the opposite direction of the arrow.
Move the cursor ◉ to the desired symbol or the number, and then press the Enter key to confirm.
The selected symbol will appear at the lower left of the Home screen.

### 2. Auxiliary 2nd/4th flow rate setting

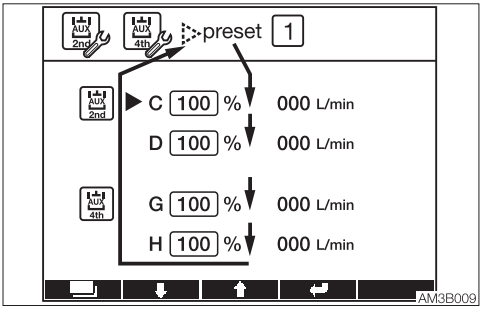


One pattern of the auxiliary 2nd/4th flow rate can be set.

| Initial condition | Standard flow | Variable range |
|---|---|---|
| Auxiliary 2nd | C/D<br>100%=55L/min*<br>(14.5 US gpm) | 10 to 100% |
| Auxiliary 4th | G/H<br>100%=55L/min*<br>(14.5 US gpm) | 10 to 100% |

The table shows the 1-way flow rate when there is no load.
*: Note that depending on the specifications, 60.6 L/min (16 US gpm) may apply. Contact our distributor for any further clarification.

Refer to the trip meter setting for the key operation. To move the cursor ▶ in the direction of the arrow, use the Down (↓) key. To move the cursor ▶ in the opposite direction of the arrow, use the Up (↑) key.

### 3. Setting the auxiliary flow rate locking

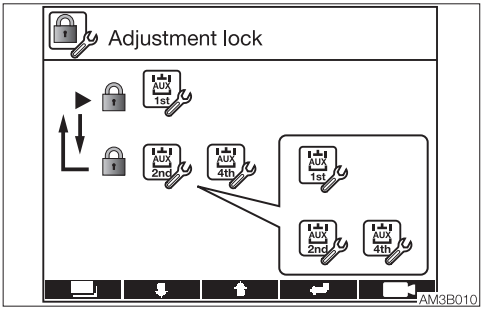


It is possible to request the user to enter a password when setting the auxiliary flow rate.
To return to the machine setting screen, press the Menu key.
Use the Up (↑) or Down (↓) key to move the cursor ▶, and then press the Enter key to turn on or off the “Lock” symbol.
Lock symbol is lit: Locked
Lock symbol is off: Unlocked
Note: If the password is set to “0000”, the auxiliary flow rate locking cannot be set to “enabled”.
Upon setting the locking to “enabled”, the screen asking for the password appears every time the ignition switch is turned to OFF or the password is changed.

### 4. Changing the password

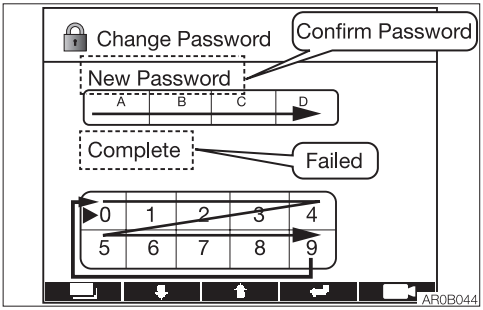


The password can be changed. Use the Up (↑) or Down (↓) key to move the cursor ▶ to the password field, and then press the Enter key to enter a 4-digit number password.
Once the password is entered, the display of “New Password” is change to “Confirm Password”.
The password change is successful when “Complete” appears after entering the same password for confirmation. If the password reentered does not match the one entered earlier, the notification of “Failed” appears asking for entering the password again in the first entry field.
To cancel editing, press the Menu key.

**Note:** If the password is set to “0000”, the auxiliary flow rate locking cannot be set to “enabled”.

### 5. ON/OFF setting

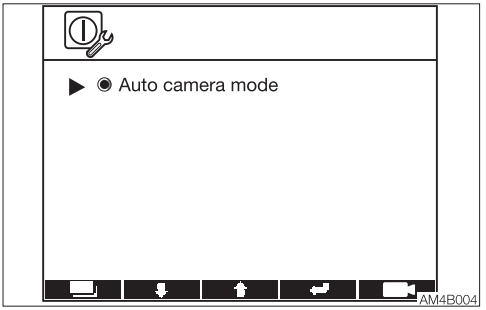


The auto camera mode can be set to ON or OFF.
Press the Enter key to turn on or off the blue circle.
Blue circle is lit : ON
Blue circle is off : OFF

## (4) DATE AND TIME SETTING

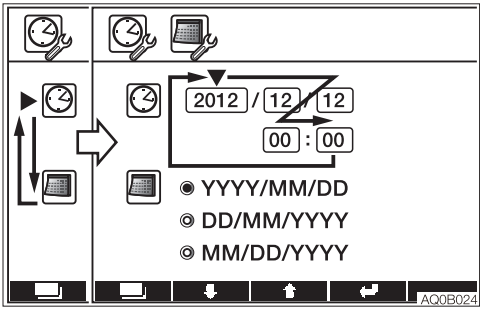


The year, month, date, hour and minute can be set. (Effective year range: 2010 to 2099)

- Move the cursor ▶ to the clock symbol, and then press the Enter key. The cursor ▼ will be shifted to the place for setting the year.
  Press the Enter key again, and then enter the year. (The year display keeps flashing during editing.)
  Press the Enter key to confirm. The month, date, hour and minute can be set using the same procedure for the year.
- Move the cursor ▶ to the calendar symbol, and then press the Enter key to change the format of “Year-Month-Date” to “Date-Month-Year” or “Month-Date-Year”.
  For the key operations, refer to “Screen control key” on page 2-25.

## (5) DATA DISPLAY

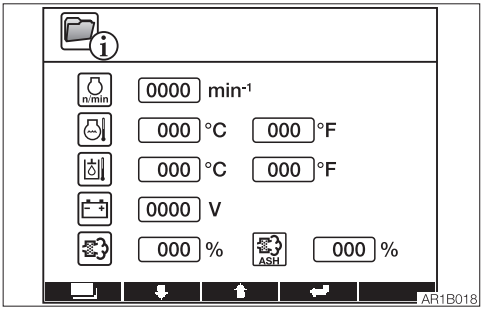


Displays various data. The setting cannot be changed.

Display items
- Engine RPM
- Coolant temperature
- Hydraulic oil temperature
- Battery voltage
- PM accumulation amount
- Ash accumulation amount

**Note:** For the data item not applicable to this machine, N/A is displayed.

## (6) ERROR CODE DISPLAY

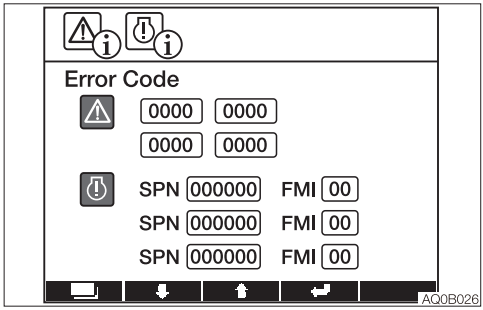


⚠.....Vehicle error code
Displays four error codes, with the latest code in the upper left.
Refer to “Vehicle error code list” on pages 6-12 to 6-13.

.....ECM error code
Engine ECM (Engine Control Module) error code
Displays three error codes, with the latest code at the top.
Refer to “Engine error code list” on pages 6-14 to 6-21.

**IMPORTANT: If an error code appears, immediately stop the operation and contact a Takeuchi sales or service outlet for help.**

## (7) LCD SETTING

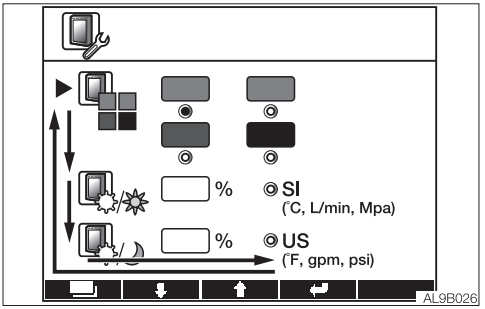


The display settings can be changed. Use the UP (↑) or Down (↓) key to move the cursor ▶.
Press the Menu key to return to the Menu screen.

**• Background color setting**

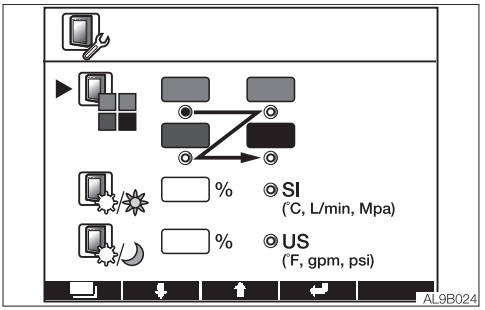


Move the cursor ▶ to the background color symbol, and then press the Enter key. The blue flashing light moves from blue gray to gray, blue and black, in this order. Move the blue flashing light to the desired color position, and then press the Enter key to confirm.
The background color can be changed in this screen, regardless of mode (day or night).

**• Brightness setting**

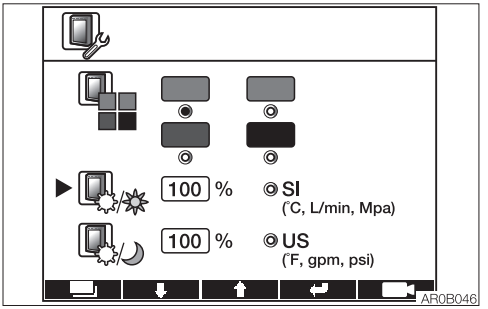


The brightness of the LCD is set to between 20 and 100%.
The brightness changes each time the adjustment is made.
Pressing the Enter key upon selecting the brightness setting symbol causes the value to flash for editing. To cancel editing, press the Menu key.
Use the Up (↑) or Down (↓) key to change the value, and then press the Enter key to complete editing.
Adjustment to the night (day) mode while in the day (night) mode cannot be synchronized.
For the key operations, refer to “Screen control key” on page 2-25.

• Unit setting

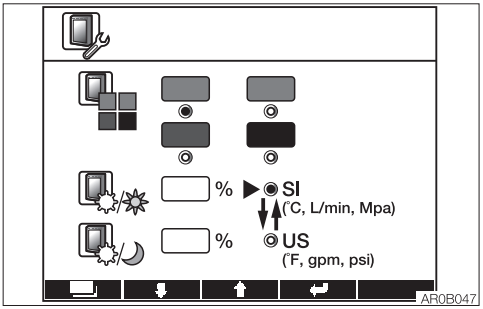


Switch between SI unit and US units. Move the blue flashing light to the desired unit position, and then press the Enter key to confirm.

## SWITCHING IMAGES

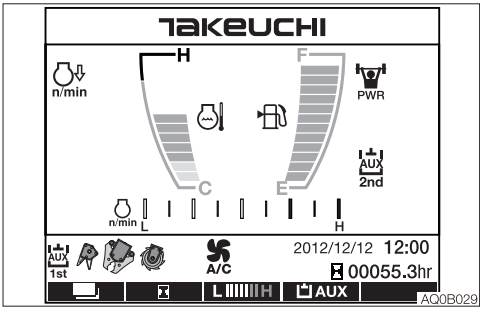


- **Changing the background color (day/ night)**

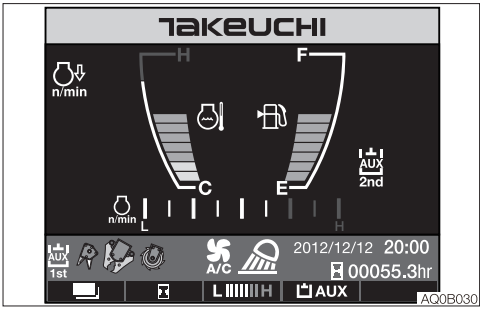


Turn on the light switch on any screen to decrease the display brightness and to enter the “evening mode”.

# SWITCHES

## STARTER SWITCH

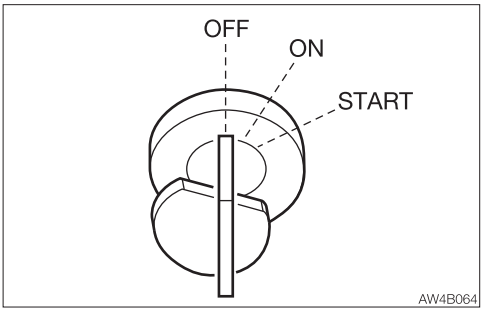


**IMPORTANT: Do not repeatedly switch the key from OFF to ON and ON to OFF over a short period. Doing so will cause engine breakdown.**

OFF ..... Position for stopping the engine and inserting or removing the key.
ON ..... Position in which the engine is running. At this position, all the electrical equipment is functional. When the coolant temperature is too low, the engine is automatically preheated.
START ..... Position for starting the engine. When the key is released, the switch automatically returns to the ON position.

## ENGINE SHUTDOWN SWITCH

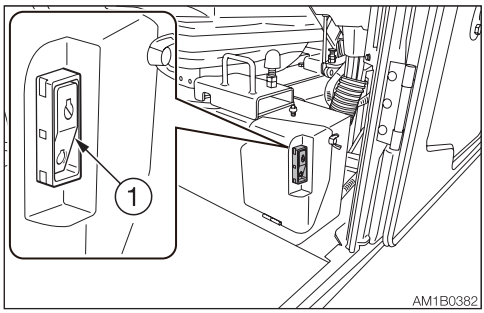


This switch is used to shutdown the engine if it fails to stop, due to machine failure or breakage, when the starter switch is set to the OFF position.
1. Press the switch (1).
2. After use, reset the switch (1).

## THROTTLE CONTROLLER

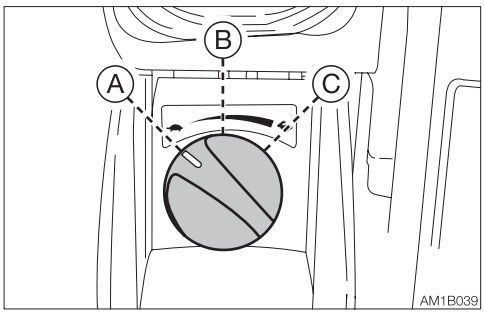


This controls the engine speed.
(A).....Low idling
(B) .....Medium speed
(C) .....Maximum speed

## HORN BUTTON

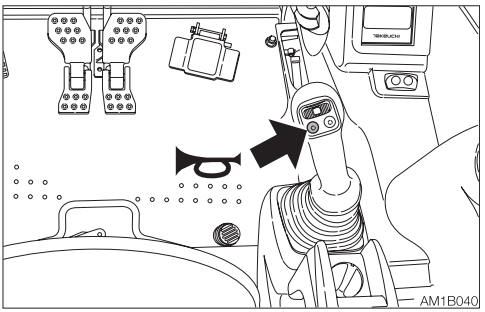


Press the button situated on the right operating lever to blow the horn.

## DECELERATION BUTTON

**⚠ WARNING**

**Before operating the deceleration button, set the operating lever to the neutral position and take your foot off the pedals. If the deceleration button is pressed while driving, the machine's operating speed will abruptly change to result in a dangerous situation.**

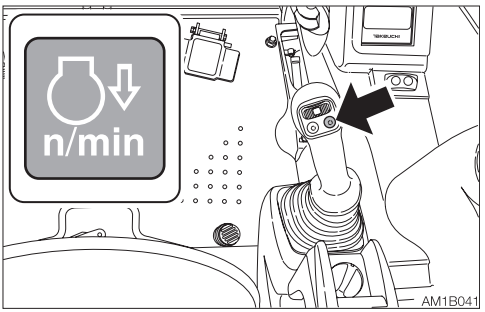


Press this button on the right operating lever to lower the engine speed to low idling. Press the button again to return to the engine speed set with the throttle controller. For safety reasons, it is designed that the deceleration function is activated to set the engine revolutions to low idling whenever the engine is started.
Cancel the deceleration mode by pressing the deceleration button as necessary.

**Note:** This deceleration button is capable of decreasing the engine speed and reducing the fuel consumption, with a simple operation, in a situation such as when little engine output is required and thus the operating or the travel levers are in neutral.

## TRAVEL SPEED BUTTON

**⚠ WARNING**

**When a load greater than a set value is applied during traveling in 2nd (high) speed, the speed will automatically slow down to 1st (low) speed. When the load becomes lighter, the speed will increase and return to 2nd (high) speed. It should be noted that the travel speed changes depending on the load condition (for machines with the automatic travel shift-down system).**

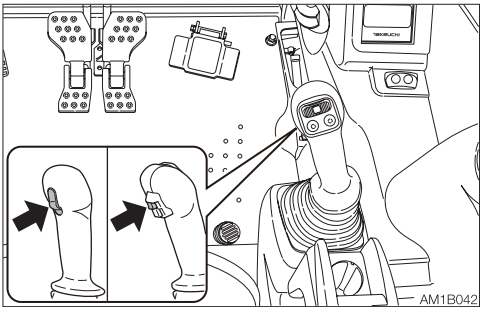


Press this switch to set the travel speed to 2nd (high) speed. Press it again to return to 1st (low) speed.

## AUXILIARY 1ST SWITCHES

### Auxiliary hydraulic buttons

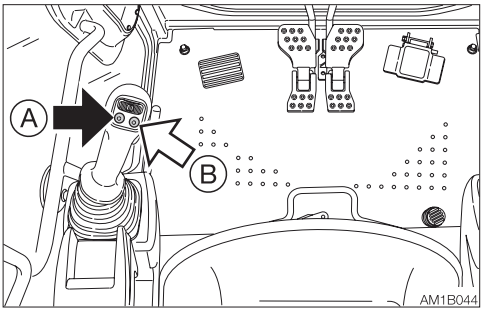


Press those buttons to control the flow of the oil in the first auxiliary hydraulic lines.
- Proportional control of the auxiliary hydraulic circuit is not possible.

(A).....Hydraulic oil flows to the left auxiliary line (a).
(B) .....Hydraulic oil flows to the right auxiliary line (b).

### Slider switch (Proportional control)

Proportional control allows for slow-to-fast/ fast-to-slow movement of attachment.
Example: If you move the slider switch half way, the attachment will move at approximately one-half the speed.

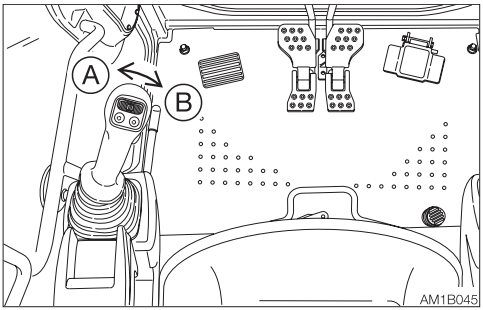


Move this switch to control the flow of the oil in the first auxiliary hydraulic lines.
(A).....Hydraulic oil flows to the left auxiliary line (a).
(B) .....Hydraulic oil flows to the right auxiliary line (b).

Refer to “Auxiliary hydraulic lines” on pages 2-70 to 2-75.

## AUXILIARY 2ND/4TH SWITCH (IF EQUIPPED)

### Slider switch (Proportional control)

Proportional control allows for slow-to-fast/ fast-to-slow movement of attachment.
Example: If you move the slider switch half way, the attachment will move at approximately one-half the speed.

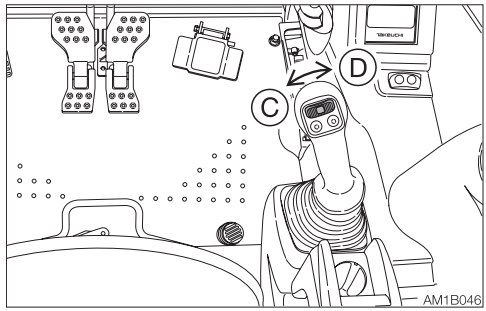


Move this switch to control the flow of the oil in the second auxiliary hydraulic lines.
(C): .....Hydraulic oil flows to the left auxiliary line (c).
(D): .....Hydraulic oil flows to the right auxiliary line (d).

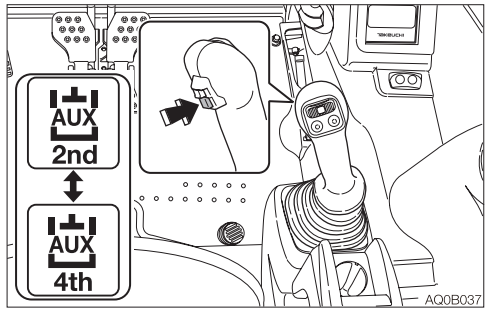


To use the auxiliary 4th hydraulic line, press the auxiliary 2/4 select button to change to the operation of the auxiliary 4th.
Refer to “Auxiliary hydraulic lines” on pages 2-70 to 2-75.

## SWING/SECOND BOOM SELECT BUTTON

**⚠ WARNING**

**It is dangerous to turn on this switch while the boom swing/second boom pedal is depressed, as the attachment may move unexpectedly. Always set the boom swing /second boom pedal back to the neutral position before operating this select switch.**

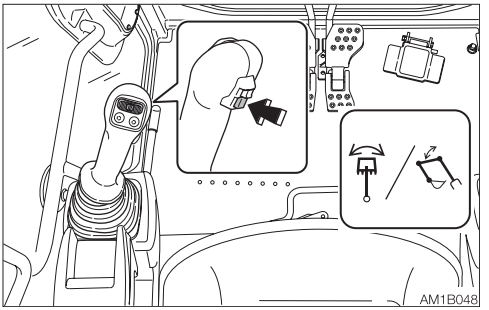


This switch is used to select either the boom swing operation or the second boom operation.




..... (a) swing display

..... (b) second boom display

When the switch is turned on, the second boom display (b) appears on the LCD to indicate that the second boom operation is enabled. When the switch is turned off, the display is changed to the boom swing to indicate (a) that the boom swing operation is enabled.
The actual boom swing operation is performed with the boom swing pedal. Refer to “Boom swing/Second boom pedal” on page 2-48.

## THIRD AUXILIARY HYDRAULIC SWITCH AND BUTTON (IF EQUIPPED)

Refer to “Third auxiliary hydraulic switch and button” on page 2-73.

## AUXILIARY 2/4 SELECT BUTTON (IF EQUIPPED)

Refer to “Auxiliary 2/4 select button” on 2-75.

## THIRD AUXILIARY HARD-LOCK SWITCH (IF EQUIPPED)

Refer to “Third auxiliary hard-lock switch (If equipped)” on page 2-74.

## DPF MANUAL REGENERATION/INHIBIT SELECT SWITCH

**⚠ WARNING**

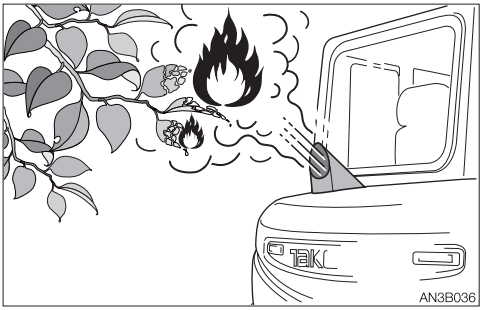
AN3B036

- The DPF and the exhaust gas emitted from the exhaust line can be very hot while the engine is running or the regeneration is under way, as well as immediately after the engine is stopped. Be careful not to accidentally touch them; doing so could cause burns.
- Do not perform the DPF regeneration if the machine is surrounded by flammable items such as plants, trees, dry grass, wastepaper, oil and waste tires. There is a risk of fire due to the high-temperature exhaust gas emitted from the DPF.
- Do not perform the DPF regeneration in poorly-ventilated indoor spaces, as smoke could be generated during the DPF regeneration or carbon monoxide poisoning could result.
- Do not perform regeneration when the engine hood is open. There is a risk of fire due to the high-temperature exhaust gas emitted from the DPF.

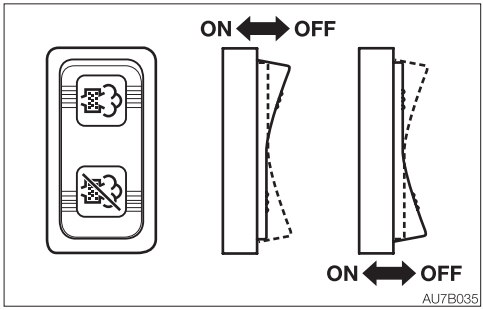

AU7B035

**IMPORTANT: Press the manual regeneration side on the DPF manual regeneration/inhibit select switch to burn the particulate matter (PM), when the DPF manual regeneration lamp flashes and an alarm sounds. If the machine continues to be operated without performing the manual regeneration, the engine power will decrease and eventually the engine will stop running. The ECM warning display will also flash if the DPF needs to be repaired. A number appears on the engine error code screen. Refer to the "Engine error code list" and contact a Takeuchi sales or service dealer for repair.**

- **DPF manual regeneration**
  When the DPF manual regeneration symbol on the display starts flashing and an alarm starts sounding, perform the DPF manual regeneration by following the procedure below.
  1. Park the machine in a safe place where there is no fire hazard.
  2. Raise the safety lock lever to the lock position.
     · Do not lower the safety lock lever and move the control levers during regeneration. Doing so interrupts the regeneration.
  3. Decrease the engine speed to low idling.
  4. Press and hold the manual regeneration side on the DPF manual regeneration/ inhibit select switch.

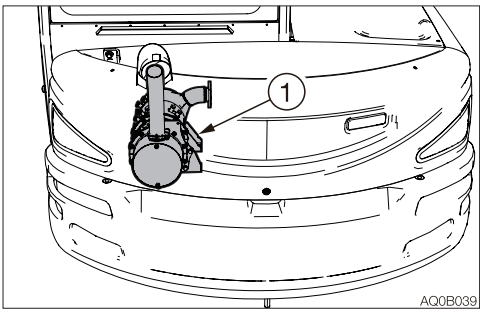


5. The manual regeneration symbol stops flashing and remains lit to indicate that the engine RPM is automatically increased and the DPF (1) regeneration (PM burning) has started.
6. Release the switch. Do not leave the machine during regeneration.
   It takes approximately 25 to 30 minutes, depending on the ambient temperature, to complete the regeneration operation.
7. The manual regeneration symbol goes off to indicate the end of manual regeneration.

**Note:**
- Since the exhaust gas is cleaned through the catalyst fitted inside the DPF, it has a smell different from that of the conventional diesel engine.
- In some cases smoke may be emitted from the tail pipe while the DPF regeneration is being performed. This is not a failure; it is due to burning of the particulate matter (PM).
- It is normal that a sound is produced when the DPF regeneration is started or completed; This is to adjust the air-intake throttle and EGR opening position.
- In some cases the noise associated with the DPF regeneration operation or cancel operation may change; this is not a failure.
- The DPF manual regeneration can be completed faster while the machine engine is warm rather than cold. Note that the manual regeneration does not start unless the coolant temperature is higher than a set value. The coolant temperature may increase while manual regeneration is being performed.
- Since the DPF regeneration is designed to work only when the accumulated particulate matter (PM) in the filter exceeds a certain amount, it will not start otherwise, even if you attempt to perform manual regeneration.

- **DPF regeneration inhibit (cancel)**
  To cancel the DPF regeneration currently being processed (manual or auto), press the regeneration inhibit symbol side.
  The DPF regeneration inhibit symbol appears on the display, and the regeneration operation must be performed again. Start the manual regeneration procedure from Step (1) above, as soon as possible. Do not press the DPF regeneration inhibit switch unless there is a risk of fire.
  To cancel, press the switch again. Turning the starter switch to OFF will also cancel the operation.
  Refer to “DPF auto regeneration/inhibit indicator lamp” and “DPF manual regeneration under way/regeneration promoting indicator lamp” on page 2-21.

## LIGHT SWITCH

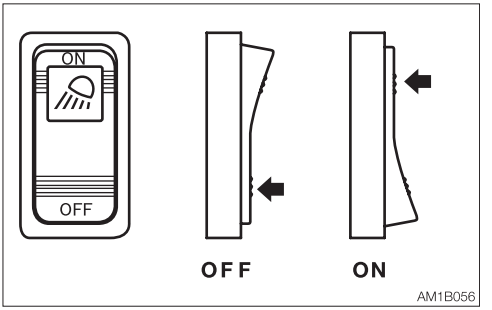


When this switch is turned while the starter switch is at ON, the lights turn on as follows:

OFF ....Off
ON .....Switch lamps, front light, boom light, side lights and tail lamps will be lit. (switch lamp is lit)

## WIPER SWITCH

**IMPORTANT: If no washer fluid is discharged, do not operate the washer. Doing so may damage the pump.**
**IMPORTANT: Operating the wiper with no moisture on the windshield will scratch the glass. Use water or washer fluid when operating the wiper.**
**IMPORTANT: In cold climates, the wiper blade may freeze to the glass. Operating the wiper forcibly may damage the wiper motor.**

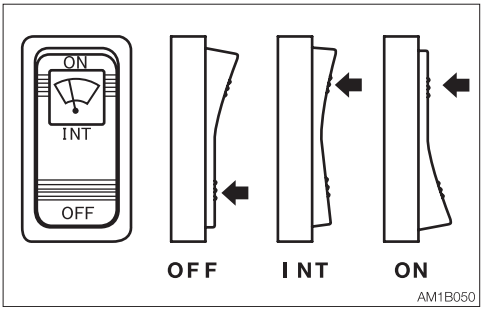


OFF ....Off
INT .....Intermittence operation
ON .....Continuous operation

## WASHER SWITCH

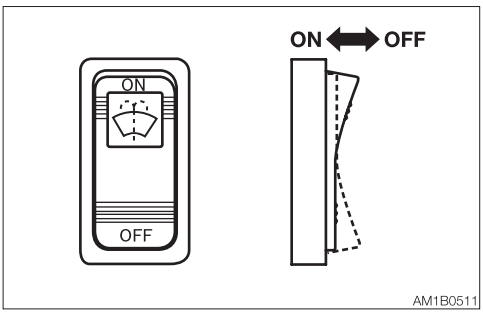


ON .....Pressing the ON side of the switch causes the washer to spray washer fluid. To stop spraying, release the switch.

## AUTOMATIC DECELERATION SWITCH

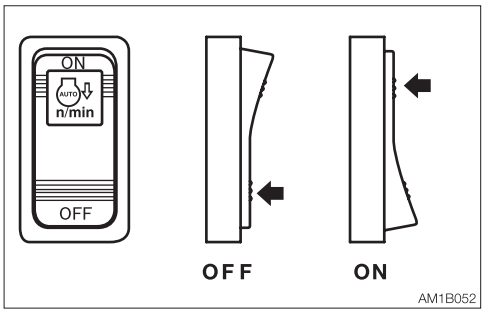


When the ON side of the switch is pressed, the deceleration lamp in the multi-information display flashes. This flashing stops when the deceleration function starts working, and the lamp remains lit while in the deceleration mode. The engine speed automatically drops to low idle (deceleration mode) four seconds after the control levers are set to neutral, to reduce fuel consumption. Moving the control levers will cause the speed to return to the original engine speed.
Switching from the deceleration button to the auto-deceleration switch will first return to the engine speed set with the throttle controller. Then, the engine will automatically enter the deceleration mode (low idling) if the control levers are not operated within four seconds.

## ECO/HIGHLAND MODE SWITCH

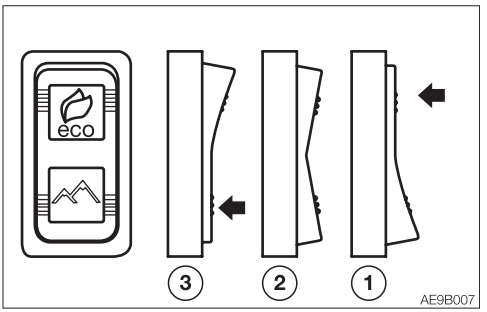


(1) **ECO mode**
Pressing the ECO symbol side of the switch turns on the ECO mode indicator lamp on the multi-information display. The engine RPM and hydraulic horse power are set to economically optimal values to improve the fuel economy
Refer to “18. ECO mode indicator lamp” on 2-21.

(2) **STD mode**
Setting the switch to the neutral position turns off the ECO mode indicator lamp.

(3) **Highland mode**
This switch is used to reduce the engine load due to the hydraulic pump. When the machine is operated at a high-altitude site, the engine output is decreased due to thin air. In such cases, the hydraulic horse power is automatically adjusted to prevent the engine from stalling. Use this switch when the machine is operated at a high-altitude site.
- Pressing the highland mode symbol side of the switch lights up the highland mode indicator lamp in the multi-information display.
- To cancel the highland mode, press the ECO symbol side halfway to set to the neutral position. The highland mode indicator lamp goes out and enters the lowland mode.
Refer to “Multi-information display” on page 2-18.

## DETENT MODE SWITCH (AUXILIARY 1ST)

**IMPORTANT: Do not operate the machine in the detent mode for a long time. Doing so will increase the hydraulic oil temperature and shorten the service life of the hydraulic units.**

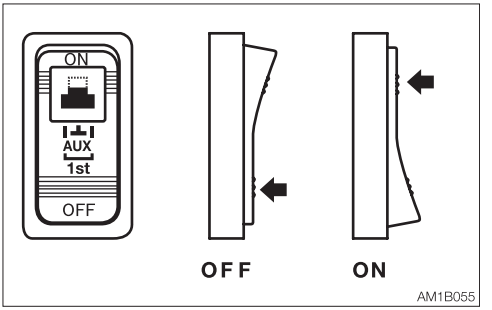


This switch is used to change the operation mode of the auxiliary 1st button (A). Pressing the ON side of the switch causes the auxiliary button (A) to enter the detent mode. Pressing the OFF side changes to the momentary mode.

## AUXILIARY 1ST AUTO TANK SWITCH (IF EQUIPPED)

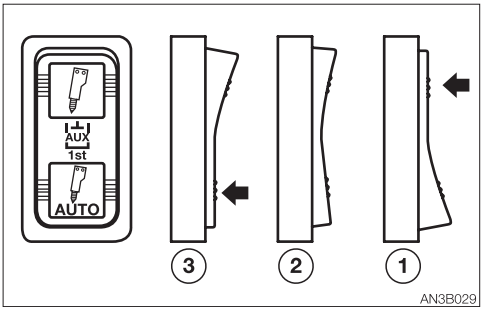


Use this switch to change the direction of hydraulic oil flow in the Aux. 1st line.

(1) When using a hydraulic breaker (1-way flow)
(2) When using a reversible attachment (2-way flow)
(3) The one-way flow can be set only when the button "A" of the Aux. 1 is pressed. (The tank circuit is automatically opened.)

## LIFT OVERLOAD WARNING SWITCH

**⚠ WARNING**

**If the overload is not removed after the overload warning horn is sounded, the machine may tip over or the emergency shut-off valve may be activated. If the horn starts sounding, stop operating the machine and lighten the load.**

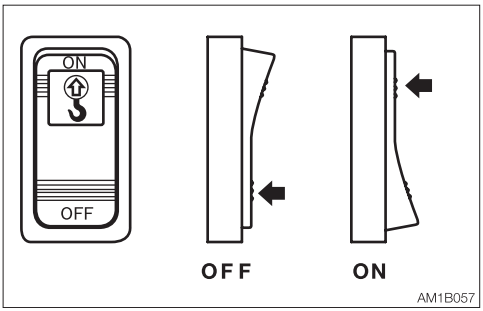


If a weight greater than the lifting capacity is applied or lifted, the overload warning device is activated and the horn sounds. (When the lift overload warning switch is turned on.)
OFF ....Off
ON .....On

## BEACON LAMP SWITCH

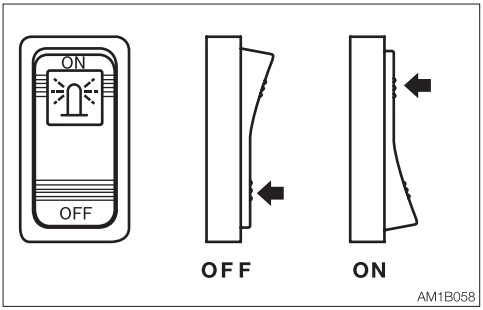


When this switch is turned on while the starter switch is at ON, the lamp turns on as follows:
OFF ....Off
ON .....Beacon lamp is lit

# LEVERS AND PEDALS

## SAFETY LOCK LEVER

**⚠ WARNING**

- **Before standing up from the operator's seat to open/close the window or remove/install the lower window, lower the working equipment to the ground, raise the safety lock lever to engage the lock and stop the engine. If any controls should be accidentally touched when the safety lock lever is lowered (unlocked), the machine will suddenly move and cause serious injury or death.**
- **Be careful not to touch the operating levers when raising or lowering the safety lock lever.**
- **Before leaving the operator's seat, lower the working equipment to the ground, raise the safety lock lever to engage the lock and stop the engine. Also, be sure to remove the key, lock the door and covers, take it with you and store it in a specified place.**

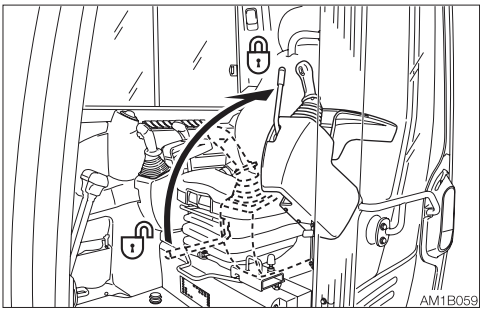


This device is for locking the operations of hoe attachment, slewing, auxiliary, dozer blade and traveling.
When the lever is raised, the lever stand springs up to lock the lever.

**Safety start function**
When the lever is in the unlock position, the engine cannot be started.

## OPERATING LEVERS

**⚠ WARNING**

- **Before starting operation, carefully check which lever pattern you are going to use.**
- **It is described using the ISO pattern in this manual.**

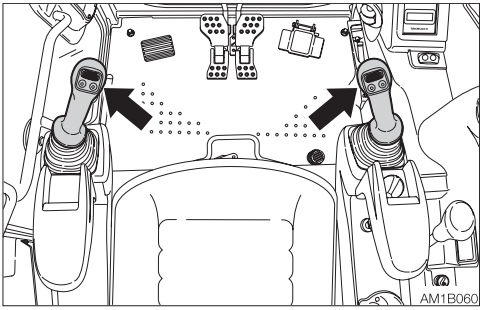


Use these levers to operate the boom, arm, bucket and upperstructure.
Refer to "Lever pattern" on pages 3-8 and 3-9.
Refer to "Operating the working equipment" on pages 3-16 and 3-17.

## BLADE LEVER

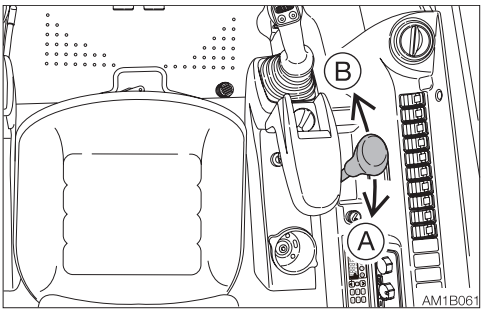


Use this lever to operate the dozer blade.
(A).....Blade up
(B) .....Blade down
Refer to “Operating the dozer blade” on page 3-17.

**Machines with the float button (USA specification)**

**⚠ WARNING**

- **Do not press the float button while the machine is raised by the blade. Doing so will cause the machine to fall. If you must work beneath the raised machine, always use a secure support to keep the machine raised.**
- **Do not press the float button while the blade is raised. Doing so will cause the blade to fall. Lower the blade to the ground before pressing the float button.**
- **Do not travel forward while the blade is in the float mode.**

Float operation

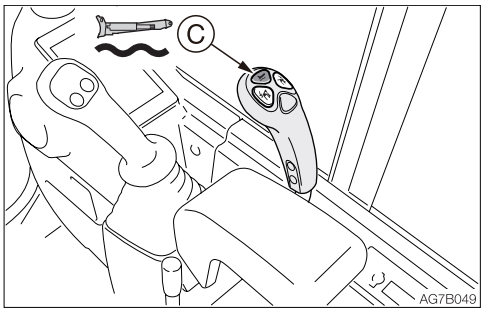


Button (C). Float mode
Press the float button (C) to set the dozer blade to the float mode.
To cancel the float mode, press the float button (C) again. The float mode is temporally cancelled when the blade lever is tilted backward. To return to the float mode, tilt the blade lever back to the neutral position. Take caution when returning to the float mode.

## TRAVEL LEVERS/PEDALS

**⚠ WARNING**

- **Before operating the travel levers/pedals, make sure that the dozer blade is to the front of the operator's seat. Remember that when the dozer blade is to the rear of the operator's seat, the travel levers/pedals must be operated in the reverse direction from when it is to the front.**
- **Do not rest your foot on the pedal unless operating it for traveling. If the pedal is accidentally stepped while working, the machine may suddenly move and cause serious injury or death.**

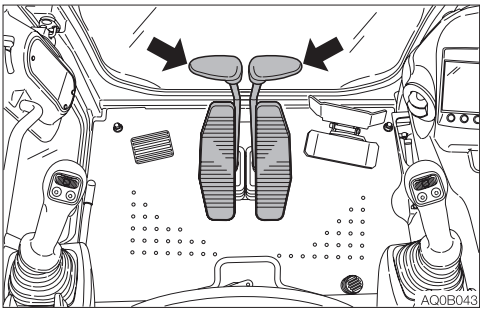


Use these levers/pedals to move forward or backward and to change directions.
Refer to "Operating the travel levers/pedals" on page 3-12.

## BOOM SWING/SECOND BOOM PEDAL

**⚠ WARNING**

**Keep the pedal cover to the locked position when not using the pedal. Stepping on a pedal accidentally when it is not locked may cause accidents.**

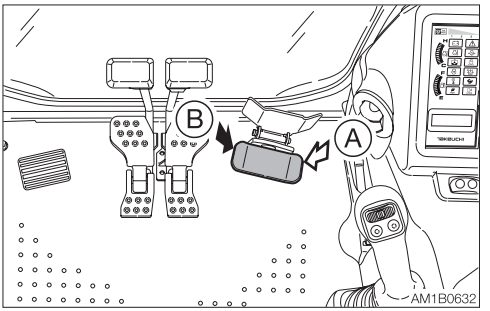


Use this pedal to operate the boom swing. If the 2-piece boom select switch is pressed, the operation will change to the second boom.
(A).....Boom swing right /Second boom lower
(B) .....Boom swing left /Second boom raise
Refer to "Operating the boom swing" on page 3-17.

### Pedal lock

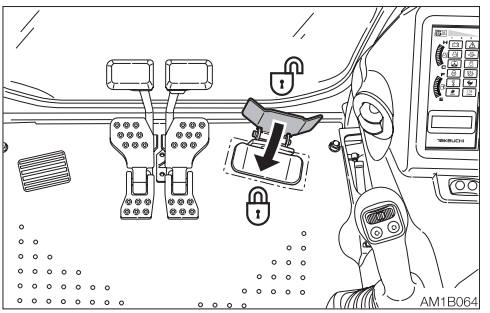


Set the pedal cover over the pedal to lock it. Open the pedal cover from the pedal to unlock it.

# ACCESSORIES

## AIR CONDITIONER

### CAUTIONS ON USE

**Ventilate periodically**

- When using the air conditioner over an extended period of time, open the windows about once each hour to let in fresh air.
- Your eyes may become irritated if you smoke while using the air conditioner. If this happens, open the windows to let in fresh air. Smoking particularly irritates the eyes when the air conditioner is being used. Since the humidity in the cab drops, the cornea becomes dry.
- If the outside air is dirty, set the air conditioner to the circulation mode.

**Always maintain good visibility**

Working with dirty windows or fogged windows restricts visibility and is dangerous. Always clean dirt and moisture off the windows before working.

- The windows tend to get foggy when the humidity is high. If this happens, turn on the air conditioner to use outside air and the defroster to get rid of the fog.
- If the air conditioner is set to high when using the defroster, the difference between the external and internal temperatures increases, resulting in frost on the outside of the windows. If this happens, either turn the air conditioner off or turn the temperature control dial clockwise to increase the internal temperature.
- Mist may blow out of the air outlets. This is not a malfunction. When moist air passes through the evaporator on the air conditioner unit, water particles in the air freeze and are emitted as mist.

**Do not overcool**

For health reasons, the air inside the cab should be kept at a temperature at which you feel a little cool when entering the cab from outside (a difference of 5 to 6°C (9 to 12°F)). Remember to adjust the temperature properly.

**Do not turn on the air conditioner until the engine is started**

To avoid placing an excessive load on the compressor, wait until the engine is started and is running smoothly before turning on the air conditioner.

**Let hot air out first**

If the machine has been parked in the sun, open the windows and door to let the hot air out of the cab before using the air conditioner.

**Caution on refrigerant (gas)**

If the refrigerant comes in contact with skin or eyes, it may cause frostbite or eye damage. Never touch the refrigerant or loosen the parts on the cooling circuit.
If the refrigerant gas leaks, keep flames away.

**Off-season inspection**

Even off season, run the air conditioner for 3 to 5 minutes at least once a week to maintain oil in the various parts of the compressor.

## NAMES OF COMPONENTS

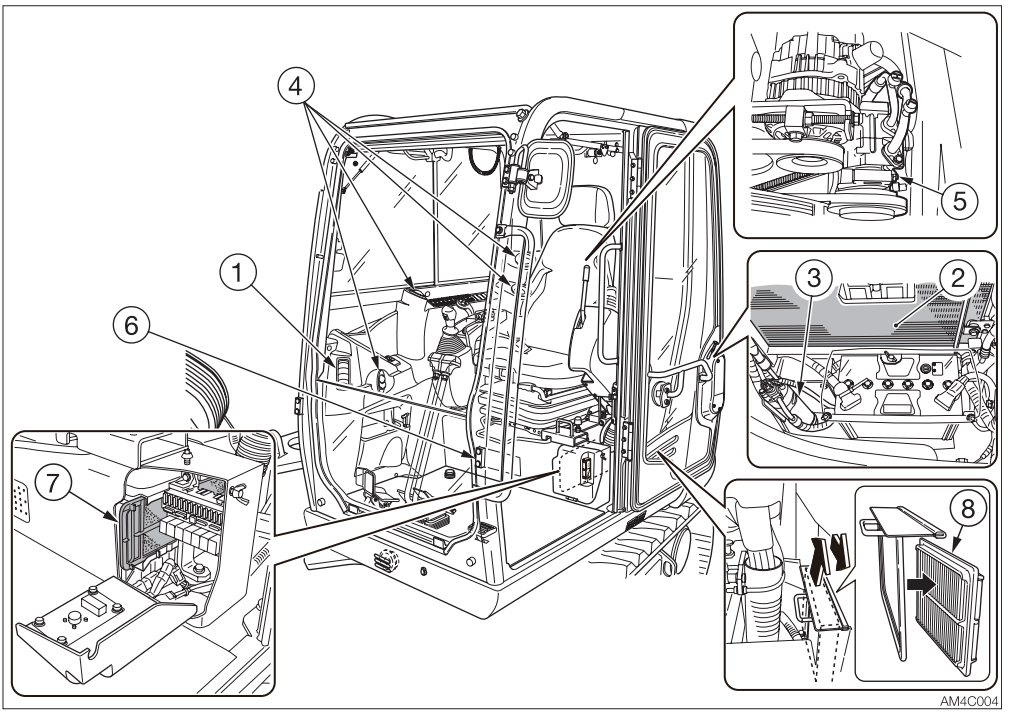


1. Defroster
2. Condenser
3. Receiver dryer
4. Outlets
5. Compressor
6. Air conditioner unit
7. Circulation filter
8. Ventilation filter

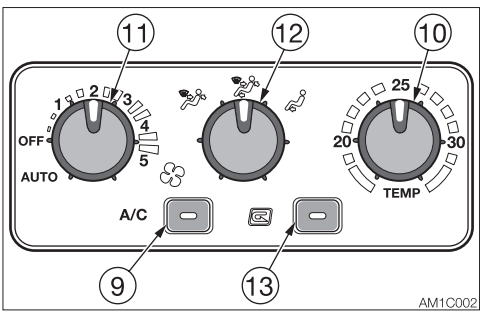


**Control panel**

9. Air conditioner switch
10. Temperature control dial
11. Fan dial
12. Outlet select dial
13. Ventilation/Circulation select switch

### Air conditioner switch

**IMPORTANT: To avoid placing an excessive load on the compressor, wait until the engine is started and is running smoothly before turning on the air conditioner.**

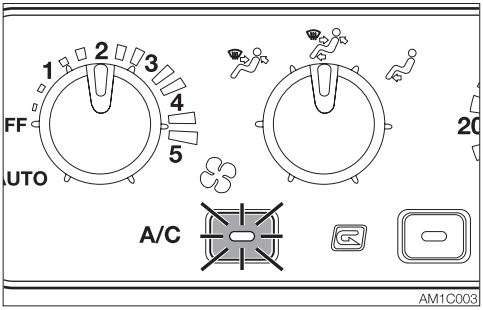


Use this switch to turn on or off the cooling/dehumidifying function. When this switch is pressed while the engine is running with the fan dial set to ON, the lamp lights up and the cooling/dehumidifying function is turned on. Press this switch again or turn the fan dial to OFF to turn off the cooling/dehumidifying function.
Lamp is off ....OFF
Lamp is on ....ON
**Note:** To prevent leakage of refrigerant gas from the compressor's seal, operate the air conditioner at least once a week, regardless of the season.
**Note:** The air conditioner will not function if the temperature in the cab is low (3°C (38°F) or lower).

### Fan dial

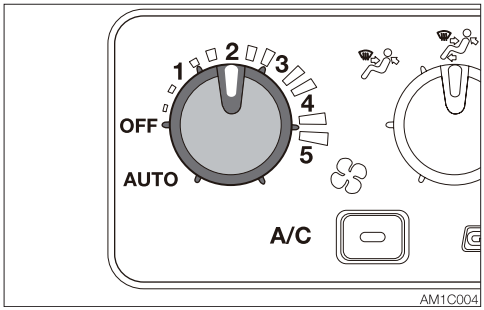


Use this switch to adjust the fan speed in five steps. Turning this switch to the OFF position turns off the air conditioner.
AUTO ..... The airflow rate can be automatically adjusted based on the position of the temperature control dial.
OFF ..... Turning off the fan and the air conditioner.
1 to 5 ..... A larger number indicates larger airflow rate.

### Temperature control dial

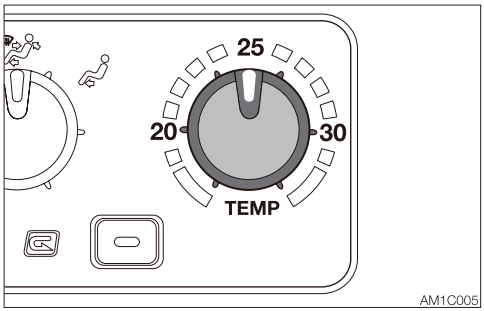


Use this dial to adjust the air temperature. Turn the dial clockwise to increase the temperature. Turn the dial counterclockwise to decrease the temperature.
**Note:** No warm air is emitted if the temperature of the engine coolant is low.

### Outlet select dial

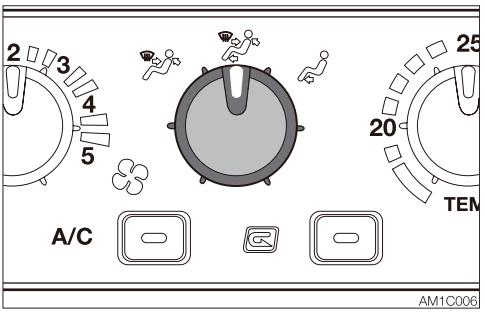


Use this dial to select the desired outlet depending on the purpose of use.

- .....Air comes from the front and rear outlets.
- .....Air comes from the front, rear and foot outlets.
- .....Air comes from the foot outlet.

Arrange the air direction at each outlet.

### Ventilation/Circulation select switch

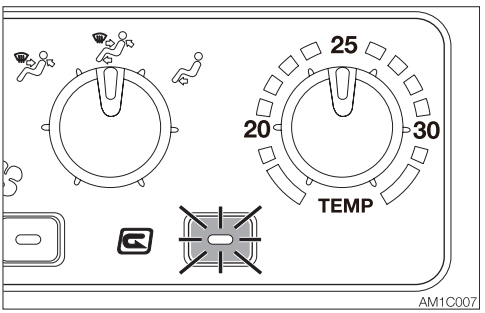


Use this switch to select between Ventilation and Circulation.
Press this switch once to turn on the lamp and set to Circulation. Press this switch again to turn off the lamp and set to Ventilation.
Lamp is on ....Circulation

- Cool or heat the cab quickly
- When external air is dirty

Lamp is off ....Ventilation

- Lets in fresh air
- Removes frosting from the windows
- Ventilates while cooling or heating

### Outlets

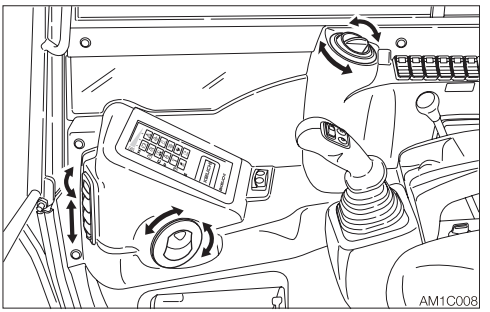


Move the louvers up and down or left and right to adjust the air flow direction and amount.

### Operation

Dehumidifying and Heating (in cold climates or when the humidity is high)

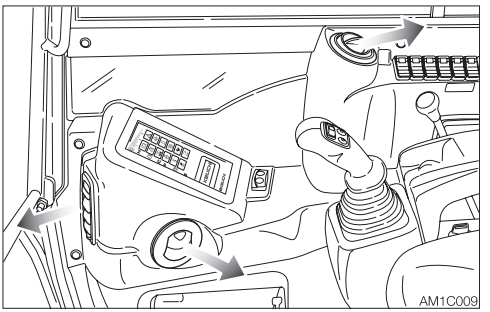


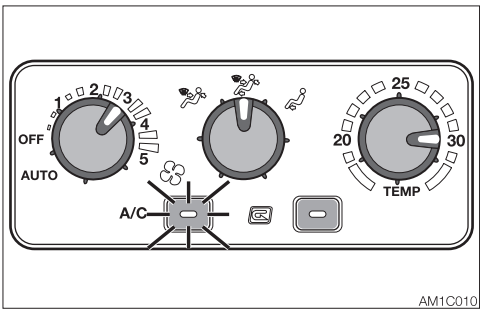


Arrange the foot outlets and the defroster so that they are directed to the front window.
Let the dehumidified warm air blow on the front window, to prevent frosting.

1. Set the desired temperature by turning the temperature control dial to between the center and the right end.
2. Set the fan dial to the desired position.

### Cooling

**⚠ CAUTION**

- **When the air conditioner is set to the circulation mode, the air in the cab gradually becomes dirty. Switch to the "ventilation" to ventilate once a comfortable temperature is obtained.**
- **Excessive cooling can be harmful to your health. It is best to keep the air inside the cab only about 5 to 6°C (9 to 12°F) cooler than the outside air.**
- **If the machine has been parked in the sun, open the windows and door to let the hot air out of the cab before using the air conditioner.**

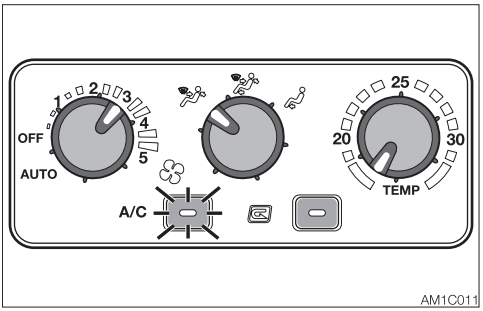


1. Turn the air outlet dial to the FACE or FULL position.
2. Set the desired temperature by turning the temperature control dial to between the center and the left end.
3. Set the fan dial to the desired position.

### Quick cooling

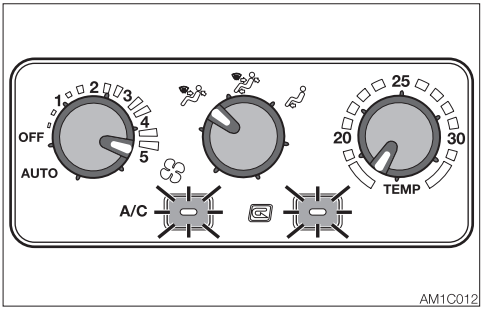


1. Turn the air outlet dial to the FACE or FULL position.
2. Turn the temperature control dial to the left end.
3. Set the fan dial to "5".
4. Press the Ventilation/Circulation select switch to set to circulation.

### Heating

1. Turn the air outlet dial to the FOOT position.
2. Set the fan dial to the desired position.
3. Set the temperature control dial to the desired position.
   For the highest temperature, turn the dial all the way to the right.
4. Turn the fan dial to the OFF position to turn off heating.

### Defrosting or defogging the windows

**Note:** If the air conditioner fan is set to High when using the defroster, the difference between the external and internal temperatures increases, resulting in frost on the outside of the windows. If this happens, either turn off the air conditioner or turn the temperature control dial clockwise to increase the internal temperature.

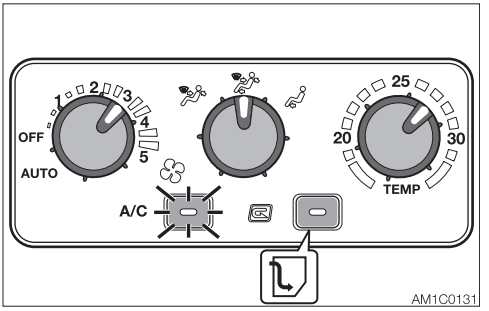


1. Set the desired temperature by turning the temperature control dial to between the center and the right end.
2. Set the fan dial to the desired position.
3. Press the Ventilation/Circulation select switch to set to ventilation.
4. Arrange the foot outlets and the back outlets of the defroster so that they are directed to the front window.

## CUP HOLDER

**⚠ CAUTION**

- **Drinks may be spilled due to vibration when the machine is operating or traveling. Be particularly careful not to burn yourself with hot drinks.**
- **Note that the cigarette lighter or other electric parts may be damaged if drinks are spilled on them.**

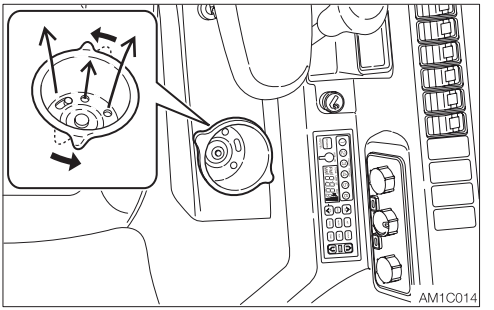


Use to hold cups or bottles.
To warm or cool the cup, turn the cup holder in counterclockwise. Warm or cool wind blows from the bottom of the cup holder.

## CIGARETTE LIGHTER

**⚠ WARNING**

- **Do not leave the cigarette lighter knob pushed in for a long time. Doing so heats up the lighter, and could be dangerous.**
- **If the lighter knob does not pop out 30 seconds after it was pushed in, it may be broken. Pull it out by hand.**
- **Do not use any other cigarette lighters than Takeuchi's. They could be stuck in the middle and not pop out.**
- **Use only those electric products which comply with the specifications of this socket.**
- **Do not touch the metallic parts of the lighter. Doing so could cause burns.**

This is the cigarette lighter and internal power supply socket.
When using, be careful not to exceed 12V/5A.

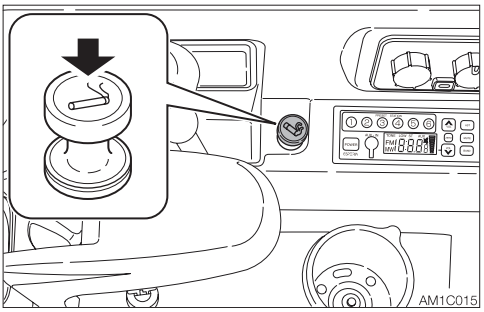


1. Push the lighter in.
2. Release the lighter and wait for it to pop out. The lighter pops out automatically when the heater becomes red hot.
3. Once the lighter pops out, pull it out.

## ASHTRAY

**⚠ WARNING**

- **Be sure to extinguish cigarettes and matches completely before putting them in the ashtray, and close the ashtray after each use.**
- **Do not overfill the ashtray with cigarette butts or put in paper or other easily burnable objects. Doing so could cause fire.**

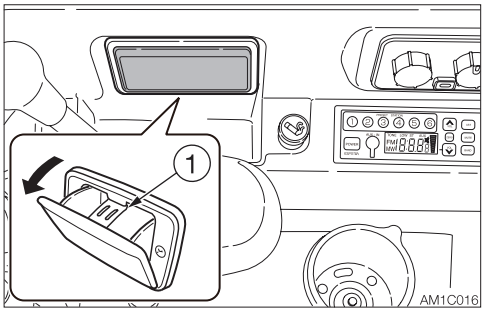


Pull the ashtray out towards you to use it. To clean, press the ash discharge button (1) and pull out the ashtray.

## INTERIOR LIGHT

**IMPORTANT: The battery capacity decreases if the interior light is left on for a long time when the engine is stopped.**

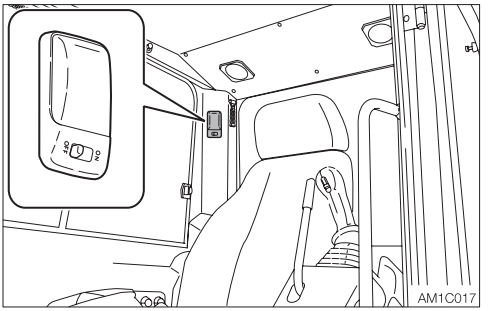


OFF ....Remains off all the time.
ON .....Lights up all the time.

## EXTERNAL POWER SOCKETS

**⚠ WARNING**

**Use only those electric products which comply with the specifications of these sockets.**

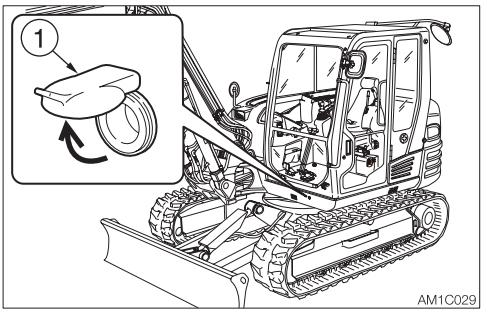


**For beacon**

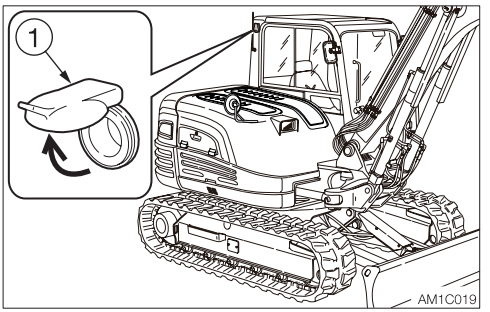


Use these sockets to connect the external power supply. When using, be careful not to exceed 12V/5A.
To use, open the cap (1).

## RADIO

CAUTIONS ON USE

- To ensure safe operation of the machine, always be sure to keep the volume of the radio down to a level where you can easily hear sounds from outside the machine.
- Do not use the radio for a long time when the engine is stopped. Doing so will drain the battery and make it difficult or impossible to restart the engine.
- Be careful not to allow water or other liquids to come into contact with the radio. Otherwise, it may result in malfunction.

NAMES OF COMPONENTS

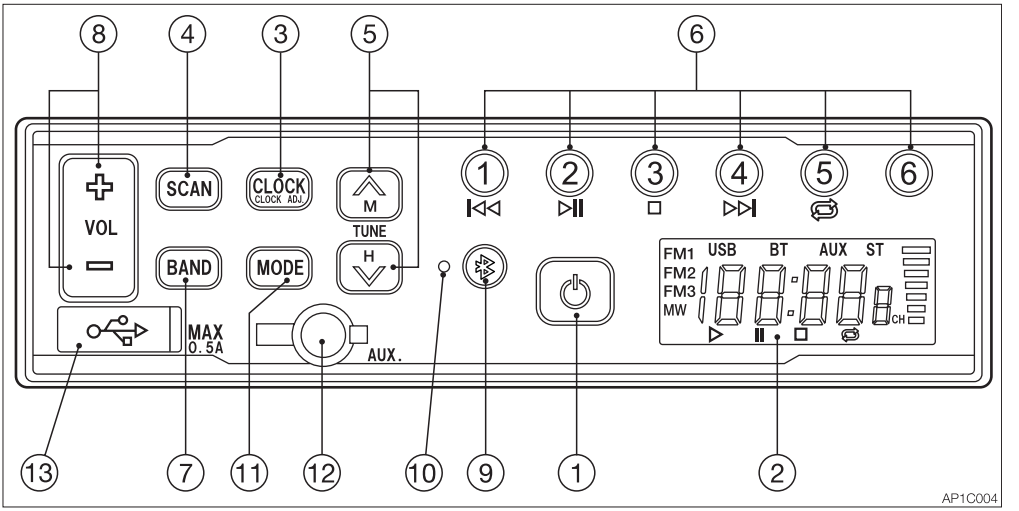

**(1) POWER button**
Use this button to turn on or off the radio.

**(2) LCD**
**<Home screen>**

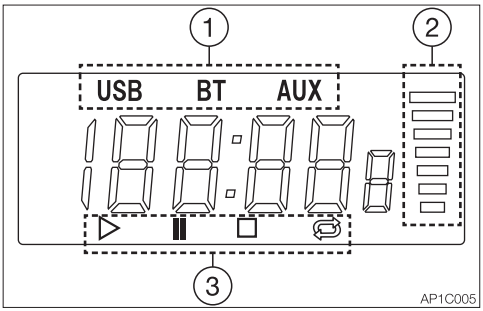


(1) Operation mode
USB: USB audio mode
BT: Bluetooth mode
AUX: Auxiliary in mode
(2) Volume level
(3) Audio control (For USB audio or Bluetooth mode only)

**<Radio mode screen>**

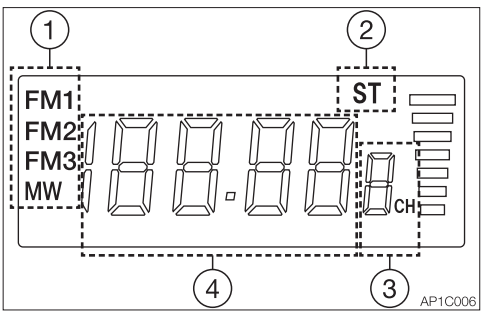


(1) Radio band display
FM1, FM2 FM3: FM band (Six stations can be preset to each band.)
MW: AM band
(2) Stereo display
Turns on when receiving stereo.
(3) Preset station
(4) Display of frequency/clock

Displays the time/the receiving frequency and the operation mode.

**(3) Clock button (CLOCK)**
Pressing this button changes the display to the clock. Pressing the button again displays the frequency. If the button is not pressed for three seconds, the display returns to the frequency. Pressing and holding the button enters the clock setting mode.

**(4) Auto store/Auto seek station (SCAN)**
Press this button to automatically assign receivable radio stations to preset buttons (1 to 6).

**(5) Tuning button (TUNE ⏶ ⏷)**
Press and hold this button (TUNE ⏶ or TUNE ⏷) for two seconds or more to start seeking the receivable stations. The seeking stops when a station is found. To cancel tuning halfway, press the button again.
Pressing the TUNE ⏶ button starts seeking stations with higher frequency.
Pressing the TUNE ⏷ button starts seeking stations with lower frequency.

**(6) Preset buttons (1 to 6) (PRESET STATION)**
Each button can store three FM stations (FM1, FM2, FM3) and one MW (AM) station.

**(7) Band button (BAND)**
Pressing this button changes the band from FM1 to FM2, FM3 and MW (AM), in this order.

**(8) Volume control button (VOL ✚ ▭)**
Press the VOL ✚ button to increase the volume and the VOL ▭ button to decrease the volume.

**(9) Bluetooth button (B)**
Press this button to connect to the already paired and most recently connected Bluetooth-enabled device.

**(10) Bluetooth LED**
Lights up when a Bluetooth-enabled device is connected. Flashes while in the pairing standby mode.

**(11) Operation mode select button (MODE)**
Pressing this button changes the operation mode from FM or MW (AM) to Bluetooth, USB and AUX, in this order.

**(12) Auxiliary input jack (AUX)**
Open the rubber cap and connect to an earphone jack of a smartphone or portable audio player with a commercially available stereo mini-plug (3.5 mm) cable. Be sure that jack is closed with the rubber cap when not in use.

**(13) USB jack**
Open the rubber cap and connect to a USB flash drive with a commercially available USB extension cable.
Be sure that jack is closed with the rubber cap when not in use.

**Setting the clock**

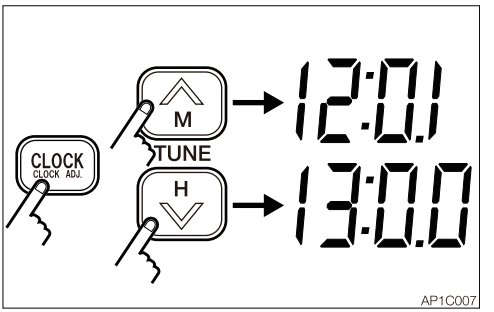


1. Press and hold the CLOCK button for at least two seconds to enter the clock setting mode. (The time display starts flashing.)
2. Use the tune ⏶ button to set the minute. Use the tune ⏷ button to set the hour.
3. Press the CLOCK button again to return to the clock display.

### Playing the radio
1. Select the band, FM or MW (AM) by pressing the BAND button.
2. Select the station with the preset button or the tuning button.
3. Adjust the volume with the VOL (− or +) button.

### Seeking stations (auto)
Press and hold the TUNE ∧ button for two seconds or one to start seeking stations in the higher frequencies direction. Press and hold the TUNE ∨ button for two seconds or more to start seeking stations in the lower frequencies direction. The radio will stop seeking when it finds a receivable station and start playing.

### Manual tuning
Press the TUNE ∧ button to increase the frequency by one step. Press the TUNE ∨ button to decrease the frequency by one step.

### Presetting stations
1. Press the BAND button to select a band (MW (AM) or FM), and then select the desired station.
2. To assign the selected station to a preset button, press and hold the button to be assigned for three seconds or more. The number of the preset button appears on the LCD to indicate that it is stored in the preset memory.
3. For more stations to preset, repeat the steps 1 and 2 above.
   - Each preset button (1 to 6) can store three FM stations (FM1, FM2, FM3) and one MW (AM) station.

### Auto storing stations (SCAN)
Press the SCAN button while playing the radio. The radio automatically starts seeking the receivable stations in the band currently selected and assign each preset button (1 to 6) a station.

**Note:** The previous stations stored will be cleared (cancelled) by the auto storing. If the station stored in the preset button is not desirable, try to preset the station manually.

**Playing back audio content stored on a USB flash drive**
To enter the USB playback mode, first insert the USB flash drive while playing the radio and then press the MODE button. (The LCD changes to the time display and “USB” appears on the LCD.)
When playing back audio content stored on the USB drive, the following operations are available using the buttons (1) to (5).

(1) **Backward ( ⏮ ) button**
Moves one track backward and starts playing back from the beginning of it.

(2) **Playback/Pause ( ⏯ ) button**
Pauses playback when pressed during playback. When pressed again, starts playback from the point where the playback was paused.

(3) **Stop ( ⏹ ) button**
Stops playback when pressed during playback. When the Play/Pause button is pressed, the unit starts playing back the stopped track from the beginning.

(4) **Forward ( ⏭ ) button**
Moves one track forward and starts playing back from the beginning of it. Pressing and holding the button will fast forward the current track.

(5) **Repeat ( 🔁 ) button**
When pressed during playback, the unit repeats the current track.
To cancel repeating, press the button again.

**Notes:**
- When in the USB playback mode, do not insert or remove the USB drive.
- ESPERIA makes no warranty that the unit is compatible with every USB storage device.
- To connect the USB flash drive to the unit, use a commercially available USB extension cable.
- Do not connect any device other than a USB flash drive. The USB jack cannot be used to charge a device such as a smartphone.
- Please be advised that ESPERIA bears no responsibility for any damage to or loss of data on the USB drive arising from the use of the unit.

**Using the Bluetooth wireless technology**
You can use your Bluetooth-enabled mobile phone or audio device by connecting it to the unit.
When a mobile phone is connected, incoming calls will be announced.
**Note:** Since the unit is not equipped with a microphone, the unit cannot be used for phone calls.

To use the Bluetooth device, certain profiles must be able to interpreted.
The unit is compatible with the following profiles:

**Incoming mobile phone call**
HFP (Hands-Free Profile)

**Bluetooth audio**
A2DP (Advanced Audio Profile)
AVRCP (Audio Video Remote Control Profile)
**Note:** The Bluetooth® word mark and logos are owned by the Bluetooth SIG, Inc. and any use of such marks by ESPERIA is under license.

**Pairing a Bluetooth-enabled device**
When pairing the unit with a Bluetooth device for the first time, you have to pair with each other.
Once pairing is done, the unit and the paired Bluetooth device can recognize each other.

**Note:** Before pairing with the unit, turn on the Bluetooth feature on the Bluetooth device. Refer to the instruction manual of the Bluetooth device for further instructions.

1. Press the MODE button to switch to the Bluetooth mode.
2. Turn on the Bluetooth feature on the Bluetooth-enabled device.
3. Press and hold the Bluetooth button until two short beeps are heard, indicating the unit has entered the paring standby mode.
4. Select “CAR RADIO” on the Bluetooth-enabled device.

**Note:** Only one Bluetooth-enabled device can be paired and used at a time. To use a different device, follow the steps 1 to 4 for pairing again.
**Note:** At power-up, the unit automatically reconnects to the device most recently connected. When you leave the machine, cancel pairing by pressing and holding the Bluetooth button until two short beeps are heard, to avoid misconnection.

**Playing back audio content stored on a Bluetooth-enabled device**
When a Bluetooth-enabled device has been paired with the unit, check if the Bluetooth LED is lit, and then press the MODE button to enter the Bluetooth mode.
While the Bluetooth device is connected, the following operations are available using the buttons (1) to (5).

**(1) Backward ( ⏮ ) button**
Starts playing back from the beginning of the track currently playing. Pressing and holding the button will skip backward to the desired track.

**(2) Playback/Pause ( ⏯ ) button**
Pauses playback when pressed during playback. When pressed again, starts playback from the point where the playback was paused.

**(3) Stop ( ⏹ ) button**
Stops the currently playing audio.

**(4) Forward ( ⏭ ) button**
Moves one track forward and starts playing back from the beginning of it.

**(5) Repeat ( 🔁 ) button**
Disabled in the Bluetooth mode.

**Note:** If no sound is heard from the unit, check to see that the output destination of the music from the Bluetooth device is set to “CAR RADIO”.

**Receiving an incoming call on the Bluetooth-enabled device**
If a Bluetooth-enabled device has been connected, the unit enters the standby mode and waits for a call. When an incoming call arrives, “CALL” appears on the display, the volume of the car stereo is set to mute and the ringtone is heard from the speaker.

**Auxiliary input (AUX)**
- Connect a portable audio player and listen to your favorite music.
- Plug a stereo mini plug (3.5 mm) into the AUX-IN jack on the radio.
- Press the MODE button and select “AUX” to switch to the AUX mode. (The “AUX” display appears on the LCD and the frequency display is changed to the time display.)
- To return to the radio, press the MODE button again.
- When connecting, adjust the sound volume level of the audio player so that it is same as that of the radio.
- The sound volume can be adjusted with the volume control buttons on the unit.
- Do not connect a device with a larger output compared with a portable audio player.

**Resetting the radio**
If there is a problem such as display of incorrect frequency or failure in selecting, reset the unit by pressing the POWER button while pressing the Bluetooth button [B]. (In this case, the preset memory stations and clock are cleared.)
If you cannot reset the unit, please contact your sale or service dealer for help.