Operating the arm

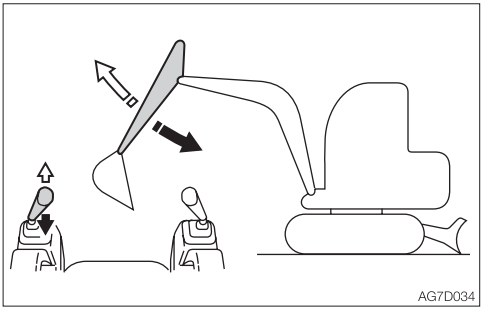

➡ Arm in:
Tilt the left operating lever backward.

⇨ Arm out:
Tilt the left operating lever forward.

Operating the boom swing

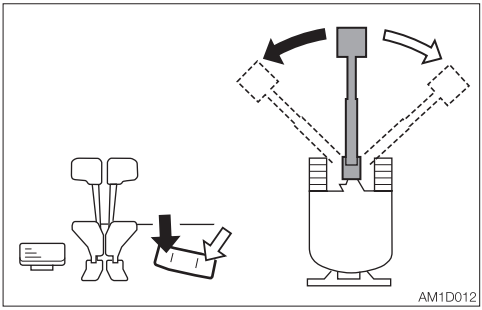

➡ Boom swing left:
Step on the left side of the pedal.

⇨ Boom swing right:
Step on the right side of the pedal.

Operating the bucket

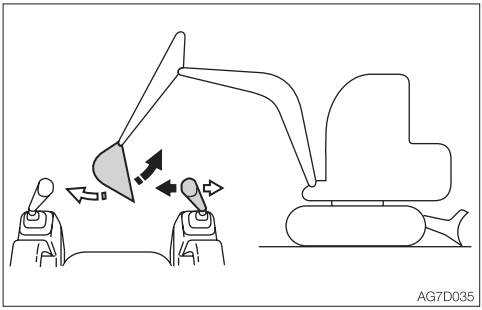

➡ Bucket load:
Tilt the right operating lever to the left.

⇨ Bucket dump:
Tilt the right operating lever to the right.

Operating the dozer blade

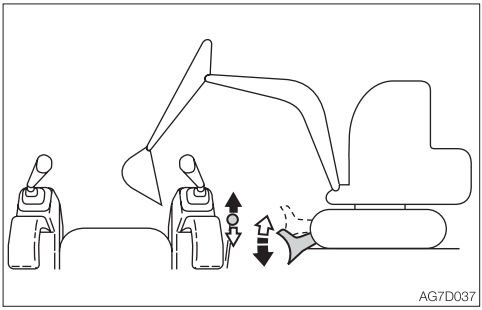

➡ Dozer blade lower:
Tilt the lever forward.

⇨ Dozer blade raise:
Tilt the lever backward.

OPERATING PROCEDURES

PROHIBITED OPERATIONS

⚠ WARNING

- **Do not operate on bedrock (hard or soft).**
- **Do not slew /swing while traveling. If you must operate the hoe attachment while traveling, operate at speeds slow enough so you have complete control at all times.**

Do not perform demolition or leveling using slew force

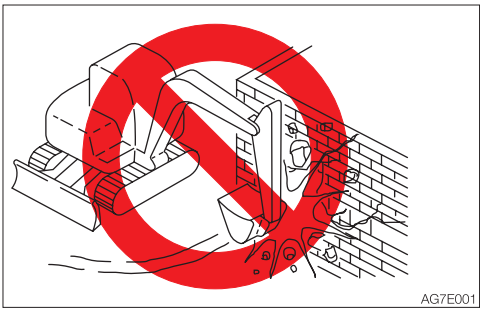

Do not demolish walls or level ground using slew force. Also, do not dig the bucket teeth into the ground during slewing. Doing so will damage the hoe attachment.

Do not dig while traveling

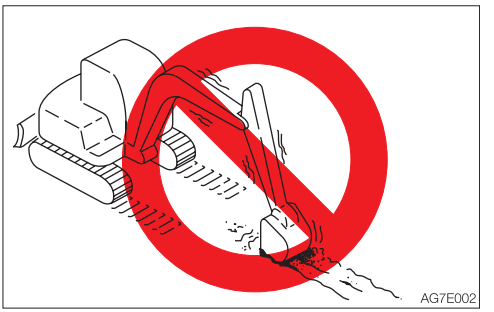

Do not dig the bucket into the ground and use the traveling force to dig.

Be gentle when using the hydraulic cylinder

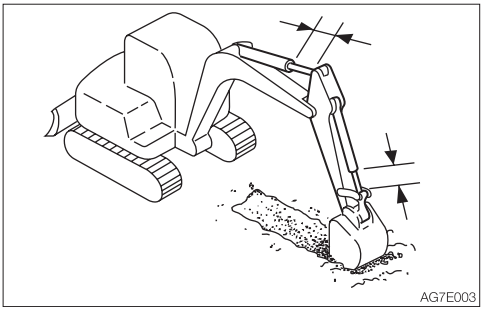

Do not extend the hydraulic cylinders to the stroke ends. Operate them with leeway.

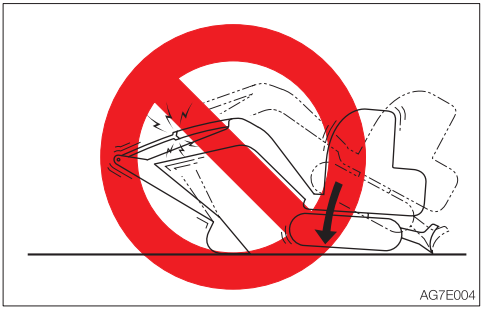

Do not support the machine body with the hoe attachment when the body is lowering with the arm cylinder fully extended. Doing so concentrates the load on the arm cylinder and could damage the arm cylinder.

Do not drive piles with the bucket or dig by banging the bucket

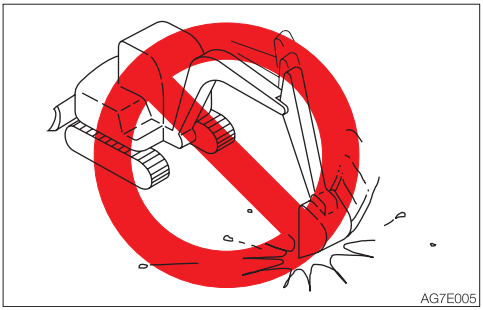

Doing so will shorten the service life of the hoe attachment. Use the hydraulic force to dig.

Do not perform operations using the machine's dropping force

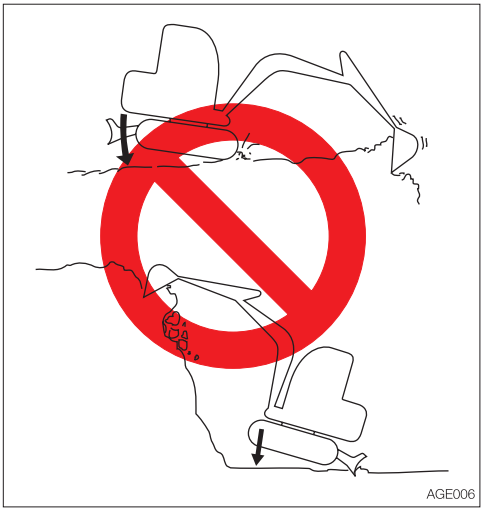

Putting excessive strain on the machine will shorten its service life. When digging, use the hydraulic force of the cylinders and the shallow and long strokes.

Digging bedrock

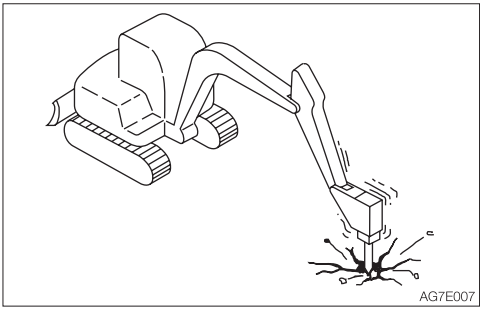

For hard base rock, break the rock up into small pieces with a breaker, etc., before digging. This prevents damage to the machine and is thus more economical in the end.

Caution on exposing the dozer blade to shocks

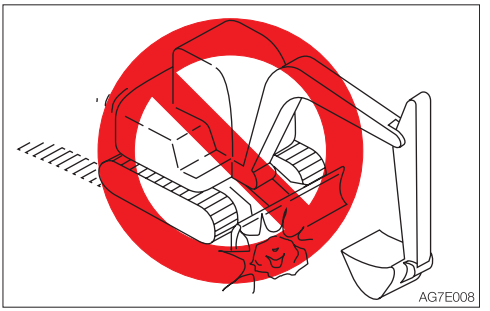

Hitting the dozer blade against rocks, etc., could damage the dozer blade or the blade cylinder.

Caution on folding the hoe attachment

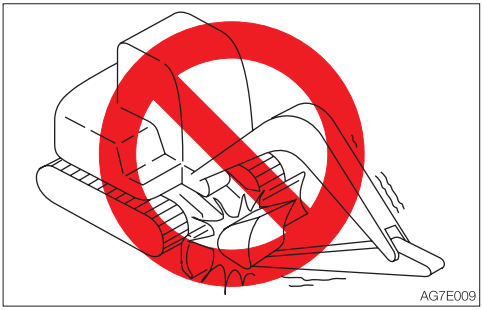

Be careful not to let the bucket to hit the dozer blade when the hoe attachment is being folded.

Do not use the dozer blade as an outrigger

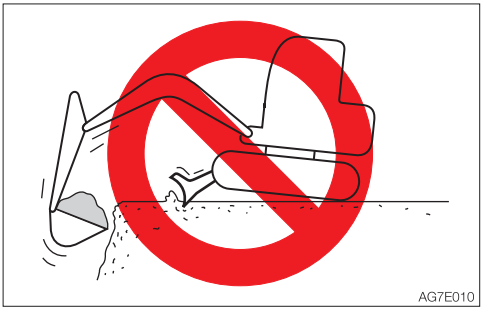

Pay attention to the dozer blade when digging

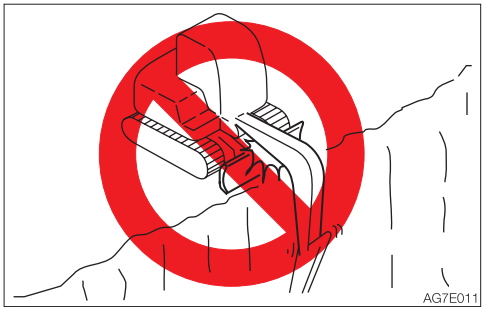

When digging deeply with the dozer blade positioned at the front, be careful that the boom cylinder and bucket do not hit the dozer blade.
Operate with the dozer blade at the rear whenever possible.

Caution on digging down with the dozer blade

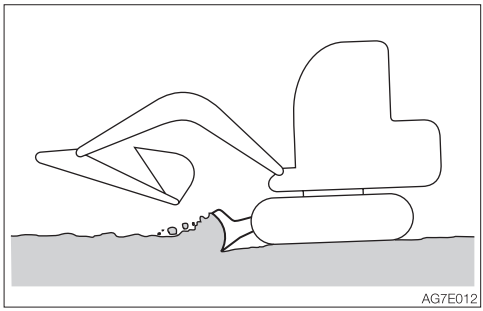

This dozer blade is designed for simple earth pushing. Do not dig down deeply with the dozer blade. Doing so could damage the dozer blade and undercarriage.

CAUTIONS ON OPERATING

Cautions on traveling

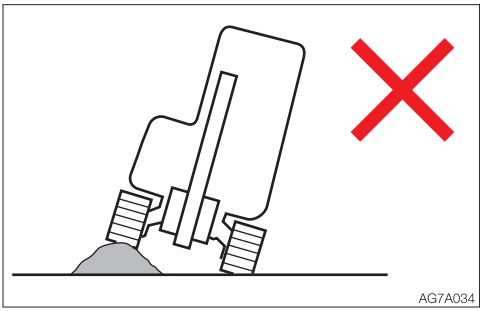

Traveling over obstacles (rocks, stumps, etc.) may put a great load on the machine body and may cause damage to it. Avoid crossing over obstacles whenever possible. If you must do so, keep the hoe attachment near the ground, travel at a low speed, and go over the obstacle at the center of the crawler.

Cautions on traveling in 2nd (High) speed

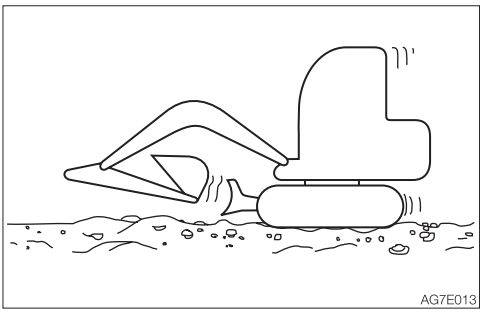

- On uneven ground, maintain the low speed and avoid starting, stopping or changing directions abruptly.
- When a load greater than a set value is applied during traveling in 2nd (high) speed, the speed will automatically slow down to 1st (low) speed. When the load becomes lighter, the speed will increase and return to 2nd (high) speed. It should be noted that the travel speed changes depending on the load condition. (for machines with the automatic travel shift-down system)
- When traveling in 2nd speed, do so with the dozer blade at the front.

Cautions on using machine in water

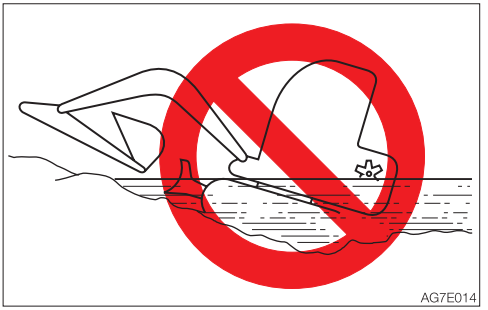

If the rear of the machine is submerged in water as shown in the figure above, it causes the radiator fan to turn in water, resulting in damage to the fan. The rear of the machine must not be submerged.

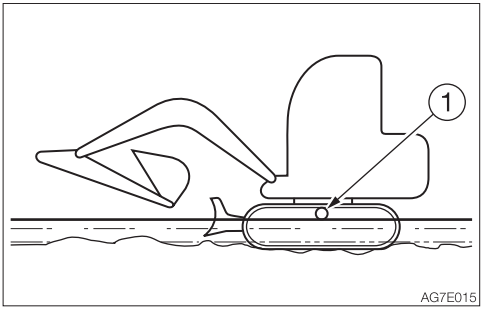

- Allowable water depth
  Use the machine in water only when the water is up to the bottom of the carrier roller (1).
- For those parts used in water for a long time, apply enough grease until the old grease is expelled.
- Never submerge the slew bearing or main body in water or sand. If submerged, contact a Takeuchi service agent for inspection.

CAUTIONS ON TRAVELING ON SLOPES

⚠ WARNING

- Never travel on slopes that are too steep for the machine to maintain its stability (maximum gradeability: 25 to 30°, lateral tipping angle: 15°). Note that in reality, the machine's stability becomes lower than the above values depending on the working condition.
- When traveling on slopes, lower the bucket to a height of 20 to 30 cm (8 to 12 in.) above the ground. When climbing a steep slope, extend the hoe attachment to the front. In emergencies, lower the bucket to the ground and stop the machine.
- When traveling on slopes or grades, drive slowly in 1st (low) speed.
- When climbing a hill, keep the operator's seat facing the hillside. When descending a hill, keep the operator's seat facing the downhill direction. In either case, travel must be done while paying attention to the ground in front of the machine.
- Do not descend slopes in reverse.

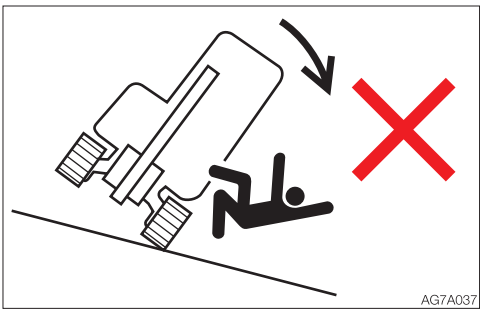

- Do not change directions on slopes or traverse slopes. First return to a flat surface, and then take an alternative path.
- The machine may slip sideways even on a slight slope if they are covered with grass or dead leaves, or when traveling on a wet metal plate or frozen surfaces. Do not allow the machine to position sideways to slopes.

Traveling posture on slopes
Climbing slopes

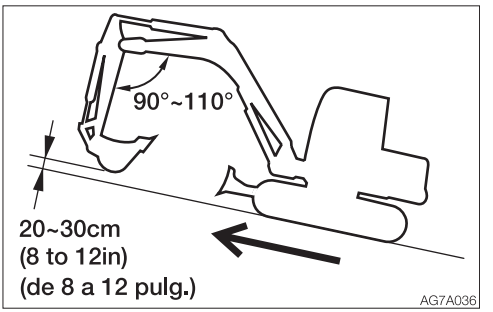

When climbing slopes of 15° or more, maintain the machine posture as shown in the figure above.

Descending slopes

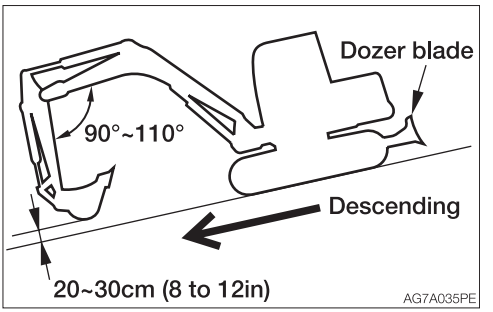

When descending slopes of 15° or more, slow down the engine speed and maintain the machine posture as shown in the figure above.

Braking when descending slopes

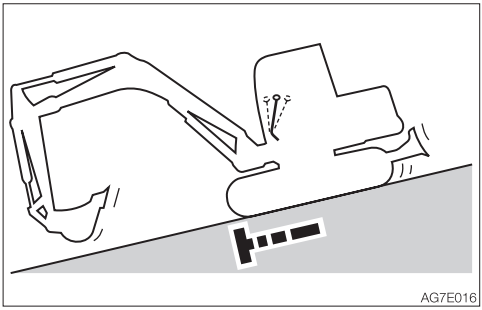

When descending slopes, the brakes are applied automatically once the travel levers are returned to the neutral position.

If the crawler slips

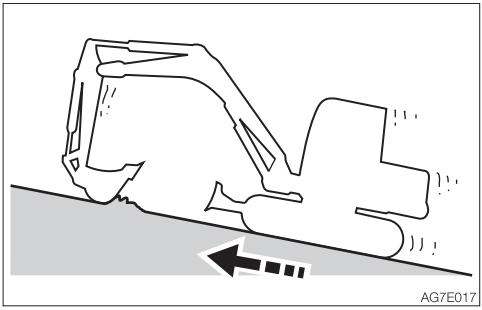

If the crawler slips while climbing a slope and impossible to travel, use the pulling force of the arm to climb the slope.

If the engine stops

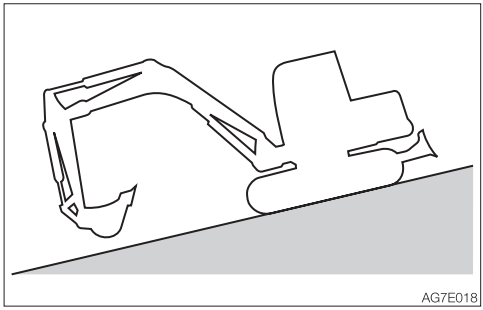

If the engine stops when descending a slope, set the travel levers to the neutral position, stop the machine, then start the engine.

Do not open the door while traveling on slopes



Opening the door while traveling on slopes is dangerous, as the force required to open and close the door changes abruptly. Always keep the door closed when traveling on slopes.

GETTING OUT OF MUD

If the machine gets stuck in mud, use the procedure below to get it out.

If one crawler is stuck

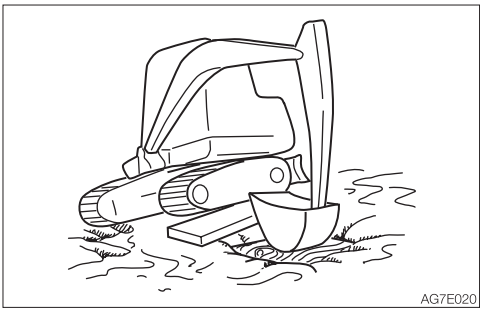

1. Swing the bucket to the side of the crawler being stuck.
2. Set the arm and boom to an angle of 90 to 110°.
3. Press the bottom of the bucket (not the teeth) against the ground.
4. Place a plank or the like under the lifted crawler.
5. Lift the bucket and slowly move the machine out of the mud.

If both crawlers are stuck

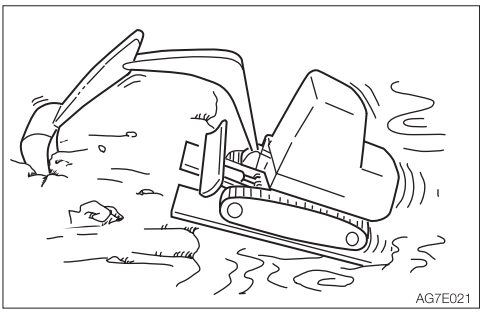

1. Perform the steps 1 to 4 above for both crawlers.
2. Dig the bucket into the ground in front of the machine.
3. Pull with the arm while traveling forward to slowly move the machine out.

OPERATIONS POSSIBLE WITH THIS MACHINE

Excavating

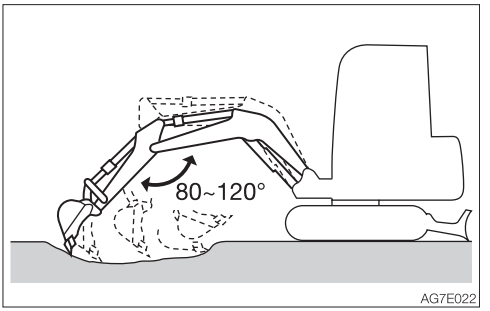

1. Set the dozer blade on the side opposite to the side you want to dig on.
2. Use the arm and bucket and dig with shallow, long strokes. The maximum digging force can be obtained when the boom and arm angle is 80 to 120°. Use this angle for effective digging.

Digging ditches

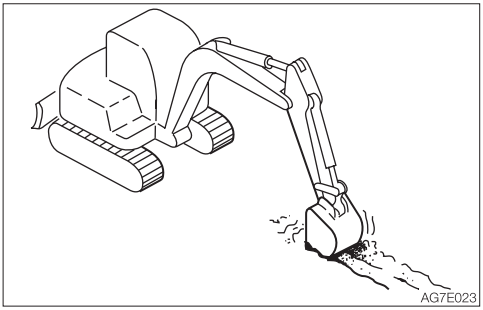

Install a bucket suited for digging ditches and set the crawlers parallel to the ditch to be dug for greater efficiency.
When digging wide ditches, dig the sides first, and then dig the center.

Digging side drains

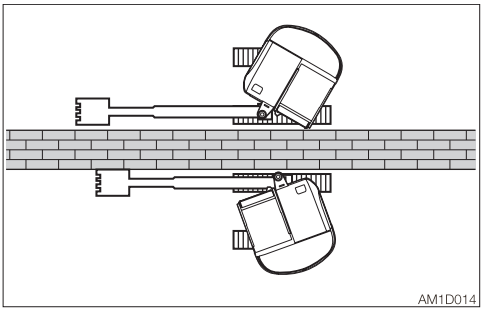

Use the boom swing function to dig side ditches as shown in the figure.

Loading

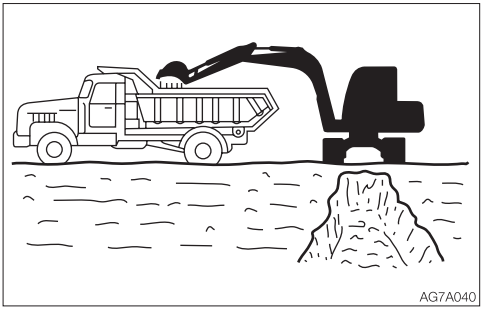

When loading dirt onto a truck bed, load from the back of the truck, as it is easier and able to load more load than doing it from the front.
Also, use a small slewing angle for greater efficiency.

Leveling

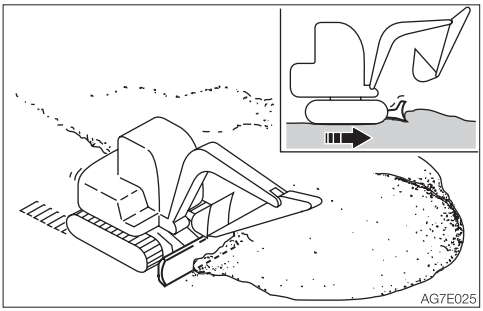

1. Bring the hoe attachment close to the body.
2. Gradually remove the dirt from the side of the mound.
3. Once the mound is low, remove the dirt from the top. If the load becomes too heavy for the machine body, adjust by raising or lowering the dozer blade.

PARKING THE MACHINE

PARKING

⚠ WARNING

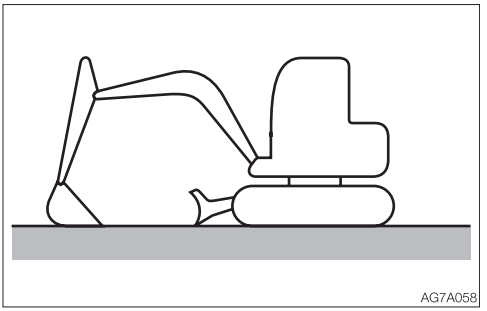

- **Park the machine on a flat, rigid and safe ground. Set the parking brake.**

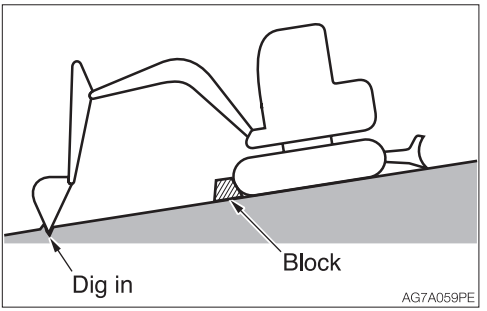

If you must park on a slope or incline, park the machine securely and block the movement of the machine.

- **When parking on a street, use barriers, caution signs, lights, etc., so that the machine can easily be seen even at night to avoid collision with other vehicles.**
- **Before leaving the operator's seat, raise the safety lock lever to engage the lock and stop the engine. Also, be sure to remove the key, lock the door and covers, take it with you and store it in a specified place.**

1. Set the left and right travel levers to the neutral position.
2. Return the dial to the original position to set the engine to low idling.
3. Lower the bucket and the dozer blade to the ground.
4. Raise the safety lock lever to the locked position.
5. Stop the engine and remove the key.
   Refer to "Stopping the engine" on page 3-9.
   For machines equipped with accumulator: Refer to "Operating the machine with an accumulator" on page 2-123.

INSPECTION AND CHECKS AFTER STOPPING THE ENGINE

1. Check for oil or water leak and inspect the working equipment, covers and undercarriage. If any irregularities are found, repair.
2. Fill up the fuel tank.
   Refer to “Inspecting the fuel level” on page 5-25.
3. Remove any paper scraps or dirt from the engine room.
4. Remove any mud from the undercarriage.

Locking
Be sure to lock the following places:

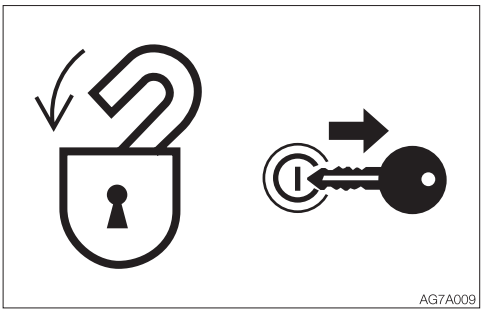

- Cab door
- Engine hood
- Covers

HANDLING IN COLD CLIMATES

PREPARING FOR COLD CLIMATES

Starting engine in cold climates is not easy, and it becomes more difficult if the coolant freezes. Prepare for cold-climate problems as follows.

Replacing the fuel and lubricant
Replace the hydraulic oil, engine oil and fuel with those intended for cold climates.
Refer to “Fuel and lubricant table” on page 5-4.

Engine coolant

⚠ WARNING

The engine coolant is combustible. Keep away from flame.
Use long-life coolant (antifreeze) and tap water for the engine coolant.

Note: New machines are delivered with JIS Type 2 long-life coolant (antifreeze) at a concentration of 50%.
Refer to “Fuel and lubricant table” on page 5-4.

Battery
As the temperature drops, the battery performance decreases.
Inspect the battery. If it is discharging, contact a Takeuchi service agent to have the battery recharged.
Refer to “Inspecting the battery fluid level and replenishing” on page 5-38.

CAUTIONS AFTER OPERATIONS

Observe the following cautions to prevent mud, water, or the undercarriage from freezing and making it impossible for the machine to move.

- Remove all mud and water from the machine body. In particular, wipe the hydraulic cylinder rod clean to prevent damage to the seal caused by mud or dirt on the rod surface getting inside the seal together with drops of water.
- Park the machine on hard and dry ground. If this is impossible, park the machine on a wooden board placed on ground.
- Drain any water in the fuel tank to prevent it from freezing.
  Refer to “Draining the water from the fuel tank” on page 5-37.
- As the battery capacity drops markedly in low temperatures, cover the battery or remove it from the machine and keep it in a warm place.
  If the electrolyte level is low, add distilled water in the morning before beginning work. To prevent the battery electrolyte from freezing in the night, do not add water after the day’s work.

AFTER THE COLD CLIMATE

When the climate becomes warmer, do as follows:

- Replace the fuel and oil for all parts with those specified in the “Fuel and lubricant table”.
  Refer to “Fuel and lubricant table” on page 5-4.
- If a coolant of “one season type” is used, drain the cooling system completely, clean out the inside of the cooling system thoroughly, and fill with tap water.
  Refer to “Cleaning the engine cooling system” on page 5-60.

HANDLING RUBBER CRAWLERS

Rubber crawlers have an inherent weakness, lack of strength, due to their use of rubber. Be sure to observe the prohibitions and cautions below to prevent the crawlers from being damaged or coming off.

PROHIBITIONS

Do not travel or operate the machine in the following places:

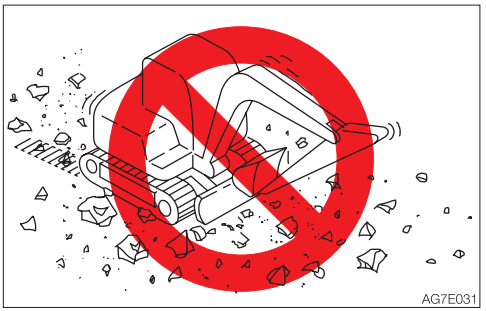

- Traveling and slewing on crushed rock, extremely rough hard rock, steel beams, scrap iron, or near the edges of steel plates will cause damage to the rubber crawlers.

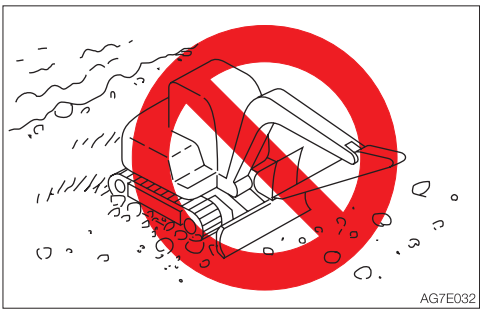

- Traveling on riverbeds or places where there are large numbers of boulders may cause the stones to get caught and damage the crawler or make the crawler come off.
- Do not use the machine on the seashore. The salt may corrode the steel core.

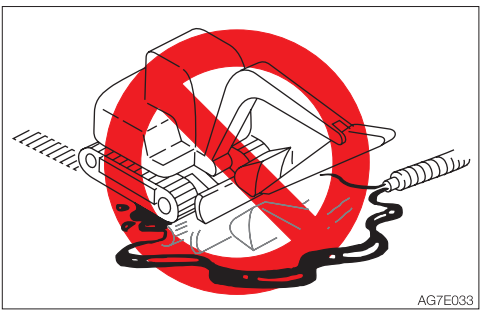

- Do not let fuel, oil, salt or chemical solvents get on the crawlers. These substances may corrode the bonding of the steel cores on the crawlers, resulting in rust or peeling. If any of these substances gets on the crawler, immediately clean it off with water.



- It will cause an irregular wear or damage to the lugs, if the machine travels on irregular surfaces such as recently paved with asphalt, exposed to a bonfire or of hot iron sheets under the blazing sun.
- Do not move earth in places where the rubber crawlers may slip. Doing so may speed up lug wear.

CAUTIONS

Observe the following cautions when operating the machine:

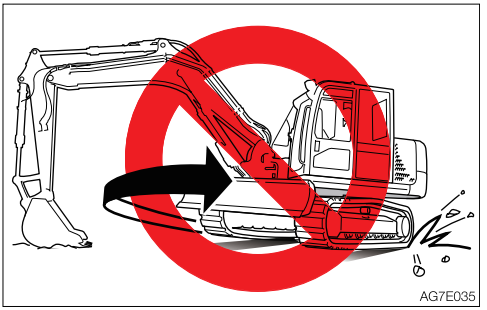

- Do not turn the undercarriage with the front of the machine body lifted using the hoe attachment (the upperstructure is not turned). Doing so will twist the crawlers with the load concentrated on a single point on the crawler belt, causing rapid damage to the crawlers.
- Avoid changing course abruptly or spin-turning on concrete surfaces whenever possible. Doing so may wear or damage the rubber crawlers.
- Avoid drops that may expose the rubber crawlers to strong shocks.
- Salt, potassium chloride, ammonium sulfate, potassium sulfate, and triple superphosphate of lime can damage the crawler belts. If any of these substances gets on the crawler belts, wash if off thoroughly with water.
- Do not let the sides of the rubber crawlers rub against concrete or walls.
- Do not damage the rubber crawlers by hitting the bucket against them.
- Be especially careful on snowy or frozen surfaces in winter, as the crawler belts tend to slip in such conditions.
- Use rubber crawler belts at temperatures between –25°C to +55°C (–14°F to 131°F).
- When storing the rubber crawlers for long periods of time (three months or more), do so indoors in a place not exposed to direct sunlight or rain.

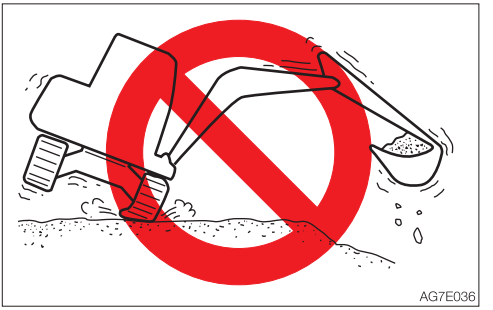

- Rubber crawler belts are not as stable as steel crawler belts since the entire lugs are made of rubber. Be very careful when slewing and swinging sideways.

PREVENTING THE RUBBER CRAWLERS FROM COMING OFF

Observe the following cautions to prevent the crawler from coming off:

- Always keep the crawlers at the proper tension.



- When traveling over a large step such as a cobblestone or rock (20 cm (8 in.) or deeper), climb up the step at the right angle and do not change courses on top of the step.

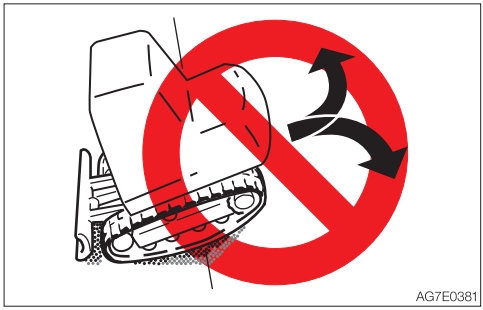

- When climbing in reverse, do not change directions at the point where the slope starts.



- Avoid traveling by setting one crawler on a slope or projecting portion and the other crawler on a flat surface (with the machine at a tilt of 10° or more). Travel with both crawlers set on flat surfaces.

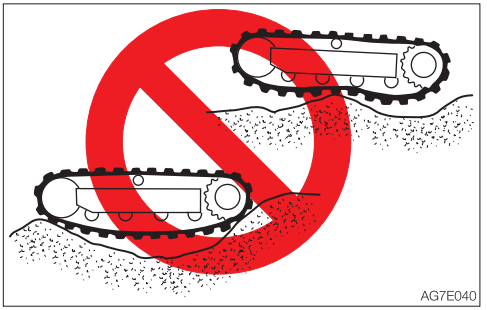

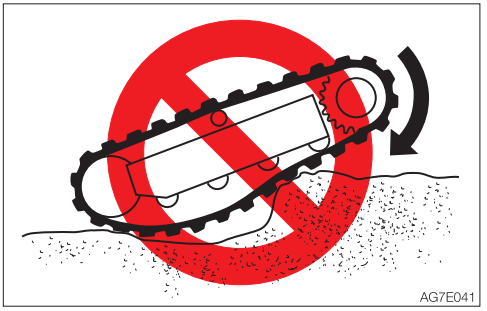

• Do not change directions when the crawler belts are slAack as shown in the figure.

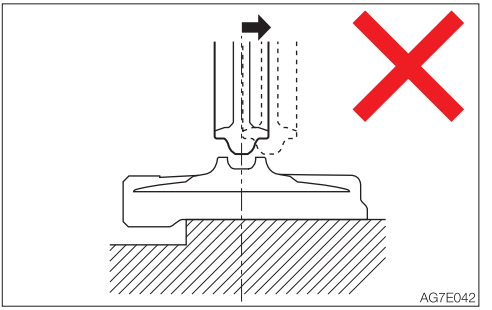

• The rubber crawler belts will come off if the machine travels backward in this condition.

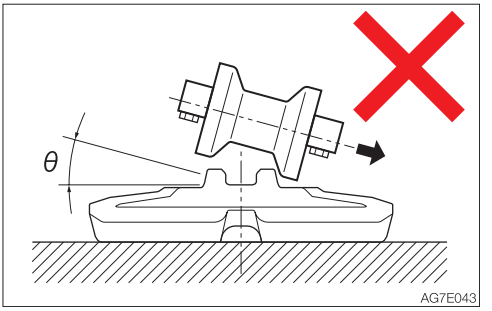

• The rubber crawler belts will come off if the machine turns in this condition.

TRANSPORT



LOADING AND UNLOADING

⚠ WARNING

The machine may roll or tip over or fall while being loaded or unloaded. Take the following precautions:

- **Select a firm, level surface and keep sufficient distance from road shoulders.**
- **Secure the ramps of adequate strength and size to the truck bed. The slope of the ramps must not exceed 15°. If the rumps are bowed down too low, support them with poles or blocks.**
- **Never use the working equipment to load or unload the machine. Doing so may result in tipping over or falling down of the machine.**
- **Keep the truck bed and loading ramps clean of oil, soil, ice, snow, and other materials to prevent the machine from sliding sideways. Clean the crawlers.**
- **Chock the transporter wheels to prevent movement.**
- **Turn off the deceleration switch and auto-deceleration switch. Otherwise, the engine speed may suddenly increase to cause troubles.**
- **When being loaded or unloaded, travel slowly in 1st (low) gear by following the signal from the signal person.**
- **Never change courses on the ramps.**
- **Do not slew/swing on the ramps. The machine may tip over.**
- **When slewing/swinging on the truck bed, do it slowly as the footing should be unstable.**
- **Lock the cab door after being loaded, if applicable. Otherwise, the door may open during transport.**
- **Chock the tracks and secure the machine to the truck bed with wire rope or chain.**

When loading or unloading the machine, be sure to use ramps or a platform and follow the procedure below.

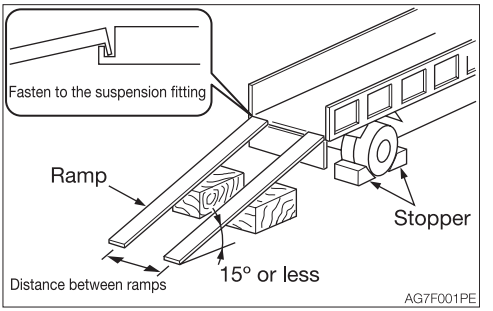

1. Set the parking brake on the transporter and chock the wheels.
2. Fix the ramps securely to the truck bed. The slope of the ramps must not exceed 15°.
3. Align the center of the truck bed with the center of the machine, and of the ramp with the center of the crawler.
4. Make sure the dozer blade does not hit the ramps.
5. Lower the hoe attachment as far as possible without letting it touch the transporter.
6. Decrease the engine speed.

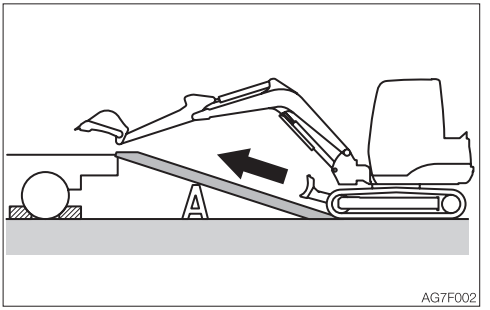

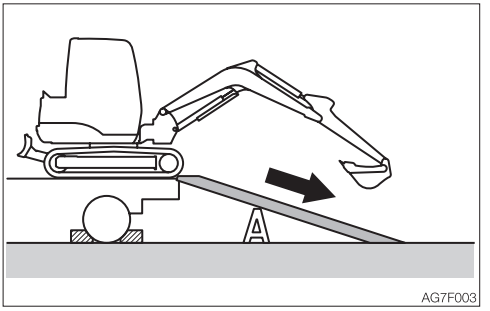

7. Drive the machine straight toward the ramps and travel up or down the ramps at 1st (low) speed, by following the signal from the signal person.
8. Load the machine at the specified position on the transporter.
   Refer to “Transporting posture” on page 4-6.

HOISTING THE MACHINE

⚠ WARNING

- **Know and use the correct crane signals.**
- **Check the hoisting points for any damage or deformation on a daily basis and replace as necessary.**
- **Check the hoisting equipment for damaged or missing parts on a daily basis and replace as necessary.**
- **When hoisting, use a wire rope capable of lifting the machine mass.**
- **Hoist the machine in only as manner described in the procedure below. Do not do it in any other manner. Doing so is dangerous as it may result in the machine losing its balance.**
- **Do not hoist the machine with an operator on it.**
- **When hoisting, hoist slowly so that the machine does not tip.**
- **Keep everyone out of the area when hoisting. Do not move the machine over the heads of the persons.**

IMPORTANT: This hoisting method applies to machines with standard specifications. The center of gravity differs according to the attachments and optional equipment installed.
Contact your Takeuchi service agent for details.

Hoisting

1. Slew the upperstructure so that the dozer blade is at the rear of the machine (set the upperstructure parallel to the track frame).
2. Raise the dozer blade fully.
3. Extend the bucket cylinder and arm cylinder fully to raise the boom to its uppermost position.
4. If the boom is swung to either the left or right side, set it in the neutral position.
5. Raise the safety lock lever to the locked position.
6. Stop the engine, remove the starter key and get off the machine.
7. Install the wire ropes as shown on the figure below. Install the wire ropes and hoisting attachment without letting them touch the machine body.
8. Hoist the machine slowly until it leaves the ground.
9. Stop hoisting until the machine becomes stable, and then start hoisting the machine slowly again.

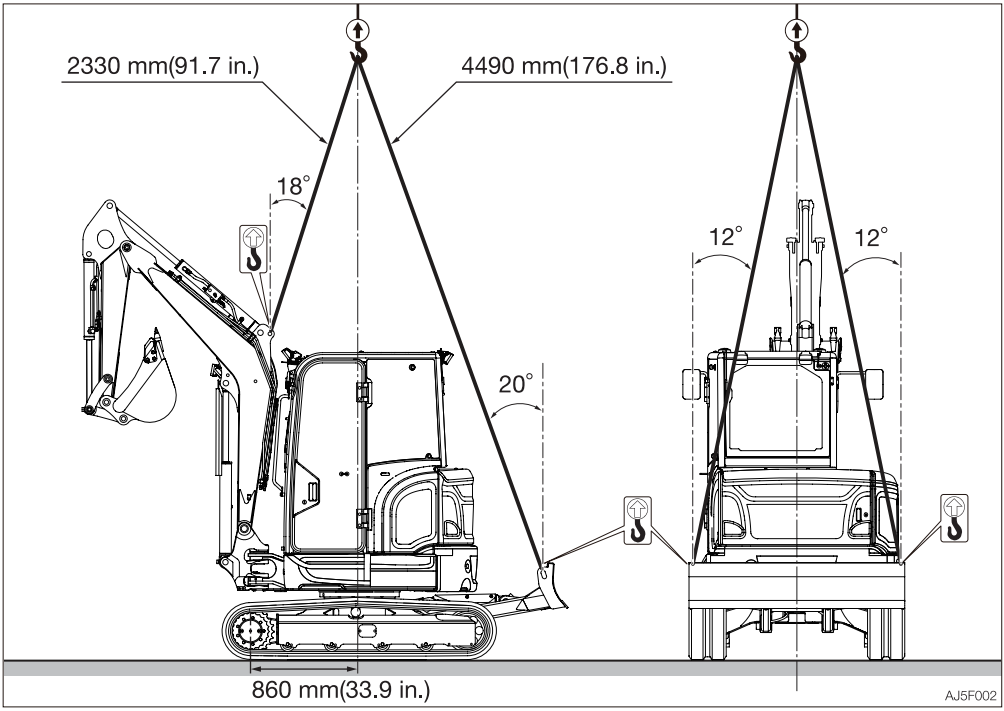
2330 mm(91.7 in.)
4490 mm(176.8 in.)
18°
20°
12°
12°
860 mm(33.9 in.)
AJ5F002

SECURING THE MACHINE

⚠ WARNING

Check the tie down point for any damage or deformation on a daily basis and replace as necessary.

After loading the machine at the specified position, secure it as described below.

Transporting posture

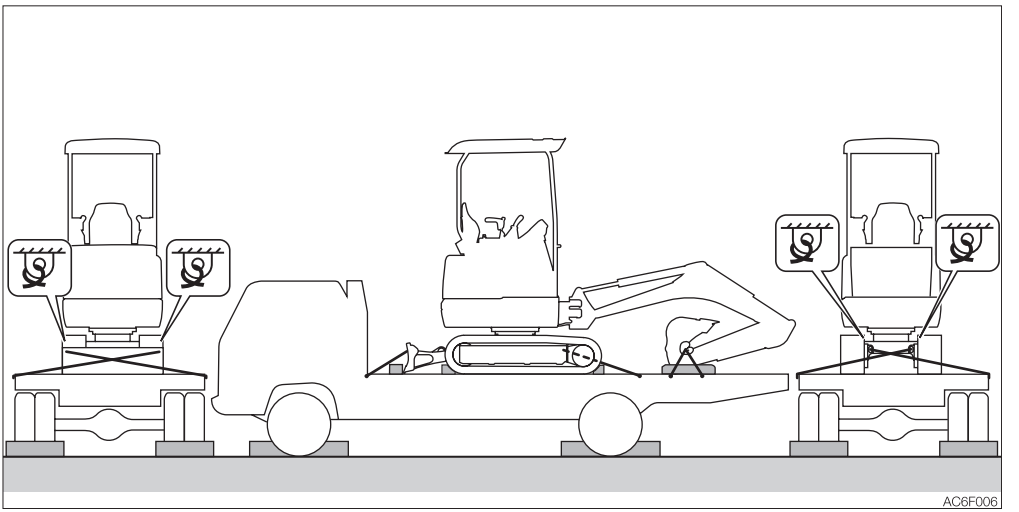

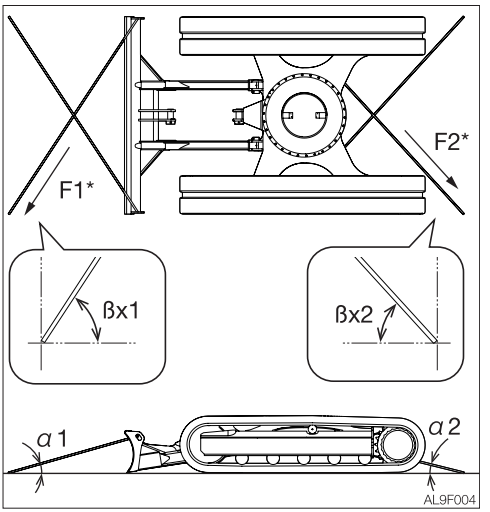

α1	19°
α2	15°
βx1	60°
βx2	46 to 50°
F1*	31.0 kN
F2*	24.2 kN

* : Distributed tying-down force

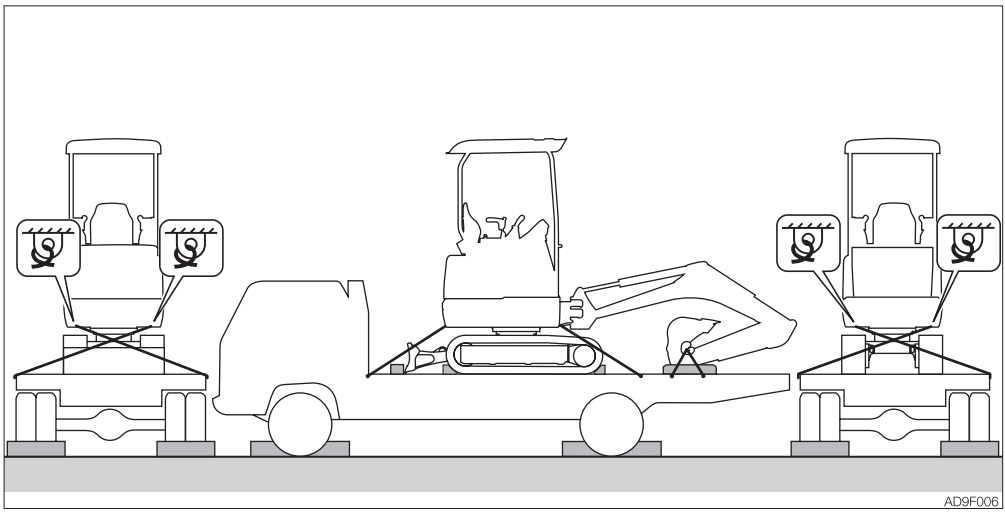

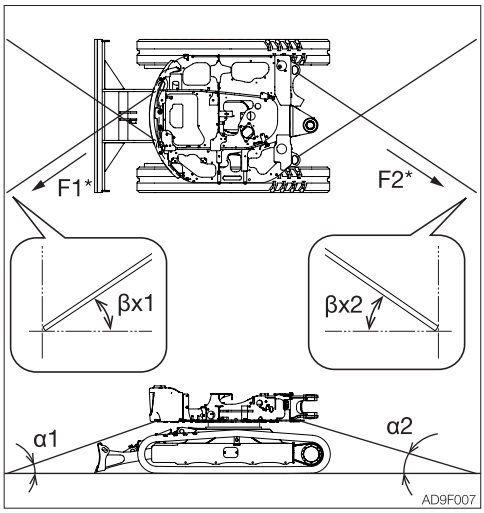

α1	11°
α2	17°
βx1	23°
βx2	37°
F1*	29.5 kN
F2*	19.7 kN

* : Distributed tying-down force

1. Lower the dozer blade.
2. Extend the bucket cylinder and arm cylinder fully, and then lower the boom.
3. Raise the safety lock lever to the locked position.
4. Stop the engine, remove the starter key and lock all locks.
5. Place the stoppers (chocks) in front and behind the crawlers.
6. <When securing the machine to the main body frame>:
   Securely fasten the machine to the main body frame by using a chain or wire rope, to prevent the machine from slipping sideways.
   <When securing the machine to the lower frame>:
   Securely fasten the machine to the lower frame by using a chain or wire rope, to prevent the machine from slipping sideways.

7. Secure the bucket with a chain or wire rope.

IMPORTANT: Place a wooden block under the bucket to protect the floor from damage caused by the bucket.

Precautions to be taken during transportation

⚠ WARNING

- **Know and follow the applicable safety rules, vehicle code and traffic laws when transporting the machine.**
- **Select the best transport route by considering the length, width, height and weight of the truck with the machine loaded on it.**
- **Never abruptly start or stop or run at a high speed at the sharp curves during transport. Doing so will move or lose the balance of the loaded machine.**

MAINTENANCE



GENERAL

MAINTENANCE OVERVIEW

To keep the machine in good condition and use if for a long period, perform the inspection and maintenance properly and safely following the procedures recommended by this manual.

The inspection and maintenance items are divided into groups according to the machine's total operating time: every 10 hours (walk-around and daily inspection), every 50 hours, every 250 hours, etc. Refer to the hour meter readings to determine when to schedule an inspection and maintenance. Items for which it is not possible to determine the inspection and maintenance interval are included under "When required".

When operating the machine in extremely harsh environments (with high dust levels or high temperatures), inspection and maintenance should be performed earlier than the times specified on the Maintenance List.

CAUTIONS ON MAINTENANCE

Do not perform any other inspection and maintenance works than those listed in this manual.
For works not listed in this manual, ask your sales or a service dealer for help.

Keep the machine clean

- Clean the machine before performing inspection and maintenance and try to keep it clean.
- Stop the engine before washing the machine. Cover the electrical parts so that water cannot enter. Water on electrical parts could cause short-circuits or malfunctions. Do not use water or steam to wash the battery, electronic control components, sensors, connectors or the operator's compartment.

Fuel, lubricant and grease

- Choose fuel, lubricant and grease by following to the "Fuel and lubricant table".
- Use fuels, lubricants and greases which do not contain water, and be careful to keep dirt out when changing or replenishing fuel, lubricant or grease.
- Store fuels, lubricants and greases in the prescribed places and in such a way that no water or dirt can get in them.

Cautions on refueling

- If the port includes a strainer, do not remove the strainer when fueling.
- After fueling, be sure to securely tighten the fuel filler cap.
- Do not add more than the specified amount of fuel.

Do not use fuel to clean parts
Do not use fuel to clean parts. Use a non-combustible cleaning agent.

Keep dirt out
When mounting and removing parts, do so in a place where there is no dust, clean the working area and the part, and keep dirt out.

Clean the installation surfaces
When installing and removing parts, be sure that the surfaces of contact of the parts are clean. If the sealing grooves of the surface of contact are damaged, consult your sales or service dealer for repair or release.

Seals and split pins
- Be sure to replace all seals and cotter pins with new ones.
- When installing, be careful not to damage or twist the seal.

Sealing tape

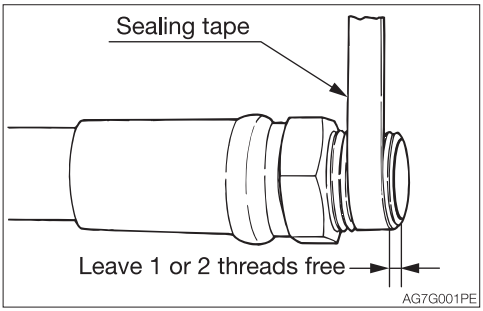

- When wrapping the plug with sealing tape, remove any old sealing tape from the threads and clean the threads.
- Wrap the thread tight with seal tape starting 1 or 2 threads away from the thread end.

Disposing of wastes
- Always collect oil that is drained from the machine in containers. Improperly disposed waste oil can cause environmental harm.
- Follow appropriate laws and regulations when disposing of harmful objects such as oil, fuel, cooling water, coolant, filters and batteries.

Check after maintenance
- Gradually increase the engine speed from a low idle to maximum speed and check that there is no oil or water leaking from serviced parts.
- Operate each control lever and check that the machine is operating properly.

Cautions on handling of battery wiring
- Disconnect the wiring from the both terminals (+ and –) on the battery before working on the electrical system or doing electric welding.
  Always disconnect it from the earth side (–). When connecting, connect the earth side last.
- Do not disconnect the battery wiring while the engine is moving. Otherwise, the electric circuits of the rotary converter or others may be damaged.

SERVICE DATA

FUEL AND LUBRICANT TABLE

Select the appropriate fuel, lubricant and grease according to the temperature by referring to the table below.

- Regardless of the specified time, change the oil if it becomes too dirty or degraded.
- When refilling, never mix oils of different brands. If a brand is to be changed, replace the whole fuel/oil.

Fuel

Diesel fuel specifications

Diesel fuel should comply with the following specifications. The table lists several worldwide specifications for diesel fuels.

Diesel fuel specification	Area
ASTM D975 No.1-D S15 No.2-D S15	USA Canada
EN590: 2009	European union
Bio-diesel fuel Biodiesel blends up to B7 EN14214, EN590	

Diesel fuel specification	Area
ISO 8217DMX	International
BS2869-A1 or A2	United kingdom

Precautions when using diesel fuel

- To maintain the performance and service life of the engine, always use clean and high-quality fuel.
- To avoid freezing in cold climates, use a diesel fuel that still functions when the temperature is at least 12°C (21.6°F) below the lowest expected ambient temperature.
- Use a diesel fuel that has a cetane number of 45 or higher. When operating at a very low temperature or at a high altitude, a higher cetane number fuel will be required.
- Use fuel with sulfur content of less than 15 ppm by volume.
  Especially in the U.S.A. and Canada, ultra-low sulfur fuel should be used.
  A higher sulfur content fuel may cause sulfuric acid corrosion in the cylinders of the engines.
- Never mix kerosene, used engine oil, or residual fuel with the diesel fuel. Use of kerosene is prohibited.
- Poor quality fuel can reduce engine performance and / or cause engine damage.
- Fuel additives are not recommended. Some fuel additives may cause poor engine performance.
- Use zinc- and sodium-free fuel.
- Do not use the fuel that has been in storage for a long time.
- Do not use the fuel purchased from a non-authorized dealer.
- In the EU, use fuel that satisfies the following conditions
  - Sulfur content is 10 mg/kg (10 ppm) or less, and 15 mg/kg (15 ppm) or less at the final distribution point.
  - Cetane number is 45% or more.
  - Fatty acid methyl ester (FAME) content is 7% v/v or less.

Precautions when using bio-diesel fuel

The warranty of the engine manufacturer may be voided by using a bio-diesel fuel that does not meet the standard or that is deteriorated.

<Applicable machine models: 135302294 or later>

Hydrotreated Vegetable Oil (HVO) fuel

HVO fuel compliant with EN15940 can be used.

IMPORTANT: Note that HVO fuel has a lower fuel density than light oil, which may reduce engine power and machine performance.

Precautions when using HVO fuel

Do not use HVO fuel that does not comply with the specified standards. Doing so could result in malfunction.

Lubricant

Location	Type	Type by air temperature -4 14 32 50 68 86 104°F -20 -10 0 10 20 30 40°C	When to replace
Engine oil pan	Diesel engine oil API: CF, CG, CH-4 or CI-4 class	SAE 10W-30 SAE 15W-40	Initial 50 hours Every year or every 250 hours after the initial 50 hours.
Hydraulic oil tank	Takeuchi genuine hydraulic oil 46	ISO VG46	Every 4000 hrs.***
	Biodegradable oil recommended by Takeuchi**** Mobil EAL Envirosyn 46H Panolin HLP Synth 46	ISO VG46	Every 4000 hrs.
	Anti-wear hydraulic oil	ISO VG32 ISO VG46 ISO VG68	Every 2000 hrs.***
Engine cooling system	Cooling water (water + coolant)** SAE: J814C or J1034	Mixture of 50% coolant	Every 2000 hrs. or every two years (whichever comes first)
Travel reduction gear	Gear oil API: GL-4	SAE 90	Every 1000 hrs after the initial 250 hrs*.
Slew bearing	Lithium based grease EP-2 NLGI No.2	—	Every 50 hrs.
Working equipment			Daily or every 10 hrs.

* : If the ratio of traveling time to total operating time is high, replace the gear oil earlier than the specified time.
** : For water, use tap water (soft). Do not use well or river water. When the ambient temperature drops below 0°C (32°F), add coolant (antifreeze). Follow the coolant manufacturer's instructions to determine the mixture ratio.
*** : The hydraulic oil replacement interval depends on the type of hydraulic oil being used. New machine are delivered with Takeuchi genuine hydraulic oil 46, and the hydraulic oil replacement intervals indicated in this manual assume that Takeuchi genuine hydraulic oil 46 is being used. When using conventional antiwear hydraulic oil, the hydraulic oil should be replaced every 2000 hours.
****: When replacing a mineral oil with a biodegradable oil, the residual mineral oil in the machine should be about 2% or less, as complying with the ISO 15380. For details, refer to "Biodegradable oil" on page 8-17.

API standard: American Petroleum Institute
SAE standard: Society of Automotive Engineers

Volume

Engine oil pan	Engine cooling system	Hydraulic oil tank	Fuel tank	Travel reduction gear
Upper limit 6.7 L (7.1 US qt.) Lower limit 5 L (5.3 US qt.)	12.5 L (3.3 US gal.)	System 59 L (15.6 US gal.) Tank 28.4 L (7.5 US gal.)	Level capacity 43.5 L (11.5 US gal.)	0.6 L X 2 (0.63 US qt.) X 2

Note: After flushing or replacing the hydraulic oil, the oil cleanliness when starting full operation shall be code 20/17/14 or better as specified by ISO.

REGULARLY REPLACE THE HYDRAULIC OIL

When a hydraulic breaker is used, the oil deteriorates more quickly than that used for a usual excavation operation. Be sure to replace the hydraulic oil and the return filter elements.

- Failure to replace these in time can lead to damage to the machine and the breaker hydraulic system. To prolong the service life of the hydraulic devices, properly replace the hydraulic oil and the return filter elements according to the table below.
- When replacing the hydraulic oil, clean the suction strainer.

Replacement interval (hours)

Item	Hydraulic oil	Filter element
1st time	—	25
2nd time	—	100
Periodically	1200 (600)	200

When the breaker operating ratio is 100%. Refer to “Hydraulic breaker” on page 8-8.

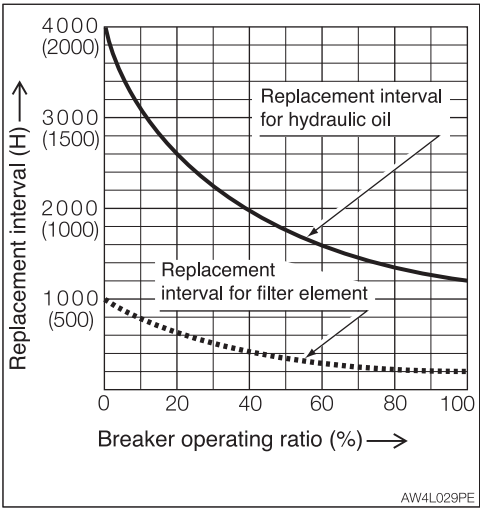

( ): When a conventional antiwear hydraulic oil is used.

HYDRAULIC SYSTEM SPECIFICATIONS

Working pressure range	P1, P2 MAIN: 24.5 MPa (3553.4 psi) P4 Pilot: 3.4 MPa (493.1 psi) See workshop manual for detail. “Service data - Specification table”
Working temperature range	-40 to 100°C (-40 to 212°F)
Type of fluid being used	ISO VG 32 to 68 or equivalent oil. See workshop manual for detail. “Service data - Table of fuel and lubricant”
Working flow-rate range	P1, P2 MAIN: 42.6 L/min (11.3 US gal/min) P4 Pilot: 10.4 L/min (2.7 US gal/min) See workshop manual for detail. “Service data - Specification table”
Lifting provisions	Refer to “Hoisting the machine” on page 4-4.
Emergency, safety and energy isolation requirements	Refer to “Lowering the boom to the ground” on page 6-22.
Painting or protective coating	Painted or plated (each hydraulic components)

LIST OF CONSUMABLES

Periodically replace consumables such as filters and elements according to the table below.

System	Item	Part name	Part No.	When to replace
Hydraulic system	Hydraulic oil return filter	Element	15511-03900	Every 1000 hrs after the initial 250 hrs.
	Pilot line filter		15512-00703	
	Air breather filter		15520-05002	Every 1000 hrs.
Engine lubrication system	Engine oil filter	Cartridge	K16271-32093	Every 250 hrs.
Fuel system	Main fuel filter	Cartridge	K15221-43170	Every 500 hrs.
	Water separator filter	Element	K15831-43382	
Air cleaner system	Air cleaner	Primary (Outer) element	KT1270-16322	Every 500 hrs. or after 6 cleanings (whichever comes first)
		Secondary (Inner) element	KT0270-93220	When the primary elements are replaced.
AC system	Receiver dryer		19115-14513	Every 2 years
	Ventilation filter	Element	19115-13680	Once a year or if clogging remains after cleaning
	Circulation filter		19115-17803	

LIST OF TOOLS (IF EQUIPPED)

Code	Part name	Part No.	Remarks
1	Spanner	16900-01012	10 - 12
2	Spanner	16900-01417	14 - 17
3	Screwdriver	16902-20205	(+) (–) replaceable shank
4	Hammer	16903-00330	3/4
5	Monkey wrench	16904-00250	250 mm
6	Pliers	16905-00200	200 mm
7	Spanner	16900-01922	19-22
8	Spanner	16900-02427	24-27
9	Single-ended wrench	16901-00013	13
10	Single-ended wrench	16901-00041	41
11	Combination wrench	16909-00019	19
12	Hex. wrench	16906-00400	4 mm
13	Hex. wrench	16906-00500	5 mm
14	Hex. wrench	16906-00600	6 mm
15	Hex. wrench	16906-00800	8 mm
16	Hex. wrench	16906-01000	10 mm
17	Hex. wrench	16906-01400	14 mm
18	Tool case	16914-00005	
19	Grease gun	16910-60610	600 cc
20	Drain connector	15545-12201	

LIST OF TIGHTENING TORQUES

Nuts and Bolts (for ISO strength category 10.9)

Tighten nuts and bolts at the torques shown on the table below, unless otherwise specified.

- The tightening torques used for the mounted plastic covers are not listed in the table below. Consult your sales or service dealer for details. They will be damaged if over tightened.
- When replacing nuts and bolts, replace them with nuts and bolts of the same size and standards.
- Tighten nuts and bolts alternately (top, bottom, left then right) or in 2 or 3 times so that they are evenly tightened.

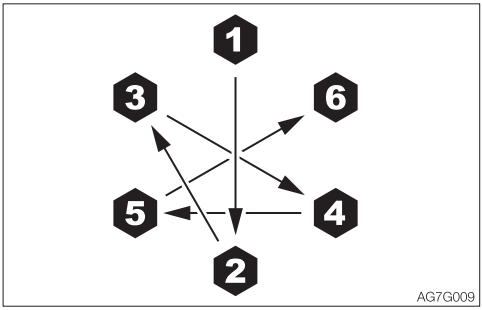

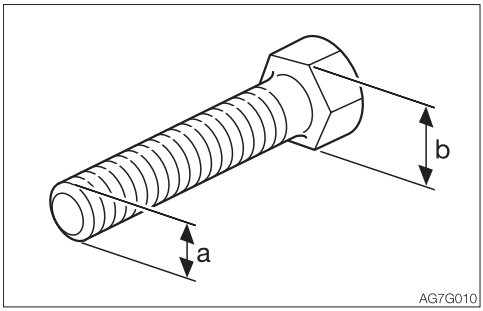

Classification	Head width (b)	Size (a) x pitch	Tightening torque	
			General connection points	
	mm	mm	N·m	ft-lb
Coarse	10	M6 x 1.0	9.8±0.8	7.2±0.6
	12, 13	M8 x 1.25	23±1.8	17±1.4
	14, 17	M10 x 1.5	47±3.8	35±2.8
	17, 19	M12 x 1.75	83±6.6	62±5
	19, 22	M14 x 2.0	134±10.7	99±7.9
	22, 24	M16 x 2.0	208±16.6	153±12.2
	27, 30	M20 x 2.5	411±32.9	303±24.2
Fine	12, 13	M8 x 1.0	25±2	18±1.4
	14, 17	M10 x 1.25	50±4	37±3
	17, 19	M12 x 1.5	87±7	64±5.1
	19, 22	M14 x 1.5	135±10.8	100±8
	22, 24	M16 x 1.5	221±17.7	163±13
	27, 30	M20 x 1.5	452±36.2	333±26.6

SAFETY-CRITICAL PARTS

To use the machine safely, periodically perform inspection and maintenance. The safety-critical parts listed below must be periodically replaced for an increased safety.
Serious injury or a fire could result if they are worn or damaged.

List of safety-critical parts

Unit	Safety-critical parts to be replaced periodically	When to replace
Fuel system	Fuel hoses	Every 2 years
	Packing on fuel filler cap	
Engine	Air-intake hose and intercooler hose	
	Cooling water	
	Radiator hoses and clamps	
	Fan belt	
Heater & AC systems	Heater hoses	
	Air conditioner hoses	

Unit		Safety-critical parts to be replaced periodically	When to replace
Hydraulic system	Main body	Hydraulic hoses (pump - delivery)	Every 2 years
		Hydraulic hoses (pump - suction)	
		Hydraulic hoses (slew motor)	
		Hydraulic hoses (travel motor)	
	Working equipment	Hydraulic hoses (boom cylinder piping)	
		Hydraulic hoses (arm cylinder piping)	
		Hydraulic hoses (bucket cylinder piping)	
		Hydraulic hoses (swing cylinder)	
		Hydraulic hoses (blade cylinder)	
		Hydraulic hoses (angle blade cylinder)	
		Hydraulic hoses (pilot valve)	
		Hydraulic hoses (auxiliary piping)	
		Seat belt	Every 3 years
		Non-slip sheet	

The material of the safety-critical part listed above tends to change over time and cause wear or deterioration. It is difficult to determine the degree of deterioration at the periodic inspection, and thus they need to be replaced with new ones after a certain time to maintain their proper performance even if they appear in good condition. Note that regardless of the replacement schedule, replacement must be performed immediately if a symptom of wear is found. If a hose clamp is deformed or cracked, replace it together with the hose immediately. When replacing the safety-critical parts, ask your sales or service dealer.
In addition to the safety-critical parts, inspect the hydraulic hoses and retighten or replace as necessary. When replacing the hydraulic hoses, replace the O-rings and seals at the same time.
Check the fuel and hydraulic hoses according to the periodic schedule described below. Refer to “Maintenance”.

Type of inspection	Inspection item
Daily inspection	Leakage from the connecting parts of hydraulic or fuel hoses Damage to cab or canopy - replace*
Monthly inspection	Leakage from the connecting parts of hydraulic or fuel hoses Damaged hydraulic or fuel hoses (cracks, wear and tear)
Annual inspection	Leakage from the connecting parts of hydraulic or fuel hoses Deteriorated, twisted, damaged hydraulic or fuel hoses (cracks, wear and tear) or hoses in contact with other parts of the machine

*: Canopy parts No. 03784-00108
*: Cab parts No. 03786-00116

MEMO

MAINTENANCE LIST

Inspection and maintenance item	Page
Walk-around inspection	
Inspecting by opening the engine hood and covers	5-20
Inspecting by walking around the machine	5-21
Inspecting while sitting in the operator's seat	5-21
Daily inspection (every 10 hours)	
Inspecting and replenishing the coolant	5-22
Inspecting and replenishing the engine oil	5-23
Inspecting the water separator	5-24
Inspecting the fuel level	5-25
Inspecting the hydraulic oil tank level and replenishing	5-26
Lubricating the working equipment	5-27
After the initial 50 hours (only for new machines)	
Replacing the engine oil and the oil filter	5-28
Inspecting and adjusting the fan belt	5-30
Inspecting and adjusting the compressor belt (AC)	5-32
Every 50 hours	
Inspecting and adjusting the crawler tension	5-34
Lubricating the slew bearing	5-36
Draining the water from the fuel tank	5-37
Inspecting the battery fluid level and replenishing	5-38

(AC): Air conditioner

Inspection and maintenance item	Page
Every 100 hours	
Cleaning the water separator	5-40
Cleaning the air cleaner	5-40
After the initial 250 hours (only for new machines)	
Replacing the hydraulic oil return filter	5-42
Replacing the pilot line filter	5-43
Replacing the travel motor gear oil*	5-44
Every 250 hours	
Inspecting and adjusting the fan belt	5-45
Inspecting and adjusting the compressor belt (AC)	5-45
Replacing the engine oil and the oil filter	5-45
Cleaning the radiator fins and the oil cooler fins	5-46
Cleaning the air filters (AC)	5-47
Cleaning the condenser (AC)	5-48
Inspecting the refrigerant (gas) level (AC)	5-50
Every 500 hours	
Replacing the fuel filter	5-52
Replacing the water separator filter	5-53
Inspecting the slew pinion gear	5-54
Replacing the air cleaner element	5-55
Replacing the fan belt	5-56
Cleaning the water jacket (inside the radiator)	5-56

*: If the percentage of the traveling time within the total operating time is high, replace the gear oil earlier than the specified time.
(AC): Air conditioner

Inspection and maintenance item	Page
Every 1000 hours	
Replacing the hydraulic oil return filter	5-57
Replacing the pilot line filter	5-57
Replacing the travel motor gear oil*	5-57
Replacing the air breather filter	5-58
Inspecting and adjusting the engine valve clearance	5-58
Every 1500 hours	
Inspecting and cleaning the fuel injection nozzle	5-59
Every 2000 hours	
Cleaning the engine cooling system	5-60
Inspecting the accumulator	5-62
Every 3000 hours	
Inspecting the fuel injection pump	5-64
Inspecting the fuel injection timing	5-64
Every 4000 hours	
Replacing the hydraulic oil and cleaning the suction strainer	5-65

*: If the percentage of the traveling time within the total operating time is high, replace the gear oil earlier than the specified time.

Inspection and maintenance item	Page
When required	
Replacing the bucket teeth and the side cutters	5-69
Replacing the bucket	5-72
Adjusting the gap between the bucket and arm (If equipped)	5-75
Inspecting and replenishing the windshield washer fluid	5-77
Lubricating the levers and pedals	5-78
Inspecting the rubber crawlers	5-79
Replacing the rubber crawlers	5-80
Every 2 years	
Replacing the receiver dryer	5-82

WALK-AROUND INSPECTION

Perform the following inspections every day before starting the engine for the first time.

⚠ WARNING

- **Before operating, perform the walk-around inspections and make repairs immediately where necessary.**
- **Be sure to secure the engine hood or cover before working the inside. Do not keep the hood or cover open on a windy day or if the machine is parked on a slope.**

Before starting the engine, look around the machine and clean any combustibles from the surroundings of the engine. Also, inspect if oil or water is leaking and any nuts, bolts or electric wiring are loosened or damaged.

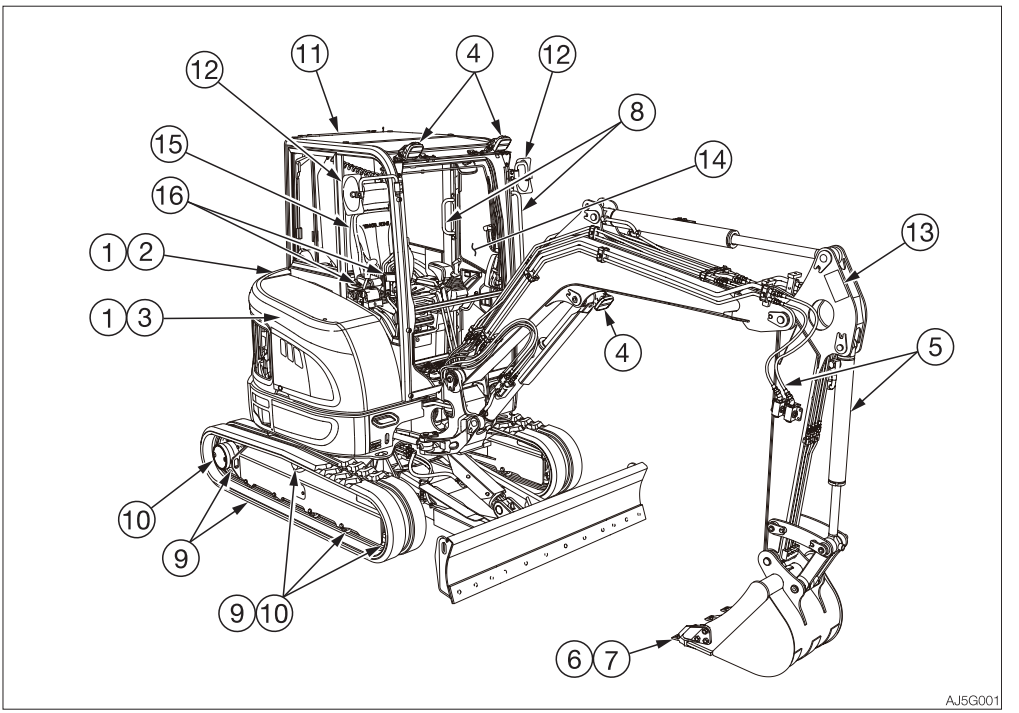

INSPECTING BY OPENING THE ENGINE HOOD AND COVERS

1. Check for any twigs, leaves, oil or other combustible materials around the engine and battery.
2. Check for oil or engine coolant water leakage around the engine.
3. Check for oil leakage from the hydraulic oil tank, hydraulic devices, hoses or connections.

INSPECTING BY WALKING AROUND THE MACHINE

4. Check lights for dirt, damage and burnt out bulbs.
5. Check attachments and hoses for damage.
6. Check the bucket, bucket teeth and side cutter for wear, damage and looseness.
7. Check the hook, slip stopper and hook mount of buckets with hooks for damage. (Option)
8. Check the handrail, the steps and the slip-resistant surfaces for damage and loose bolts.
9. Check the crawlers, carrier rollers, track rollers, idlers and sprockets for damage, wear and loose bolts.
10. Check for oil leakage from the travel motor, carrier rollers, track rollers and idlers.
11. Check the cab and guard for damage and loose nuts and bolts.
12. Check the mirrors for dirt or damage, and adjust them.
13. Check the labels for dirt and damage.

INSPECTING WHILE SITTING IN THE OPERATOR'S SEAT

14. Check the windshield for dirt or damage.
15. Check the seat and seat belt for dirt or damage.
    Check the operator's seat for dirt, oil or other combustible materials.
16. Check the monitor, instruments and switches for dirt or damage.

DAILY INSPECTION (EVERY 10 HOURS)

Perform the following inspections every day before starting the engine for the first time.

⚠ WARNING

- **Before operating, perform the daily inspections and make repairs immediately where necessary.**
- **Be sure to secure the engine hood or cover before working the inside. Do not keep the hood or cover open on a windy day or if the machine is parked on a slope.**

INSPECTING AND REPLENISHING THE COOLANT

⚠ WARNING

- **Do not remove the radiator cap or the drain plug when the cooling water is hot. Stop the engine and wait until the engine and the radiator cool before slowly loosening the radiator cap and the drain plug to remove them.**
- **Always wear the protective goggle and gloves when handling coolant (antifreeze). If any coolant (antifreeze) comes in contact with eyes or skin, wash it off with clean water. Otherwise, it could result in injures.**

Inspection

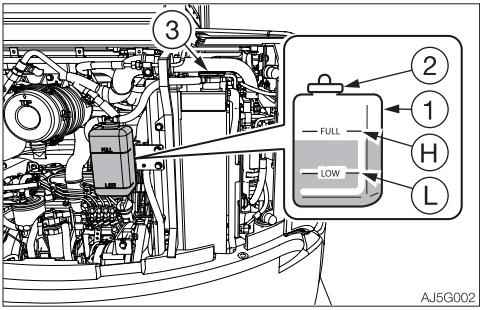

1. Open the engine hood.
2. Inspect the cooling water level in the reserve tank (1).
   The level should be between the upper limit (H) and the lower limit (L).
   If it is below the lower limit (L), replenish.

Replenishing

1. Remove the cap (2) of the reserve tank (1).
2. Add cooling water up to the upper limit (H) of the reserve tank (1).
   If the reserve tank (1) is found empty at the inspection, check for water leakage and then the water level in the radiator (3). Add water to the radiator (3) as required, and then to the reserve tank (1).
3. Install the cap (2).

Note: Use only clean water (soft water), such as tap water, to replenish the coolant loss due to evaporation. If the coolant loss is due to leakage, replenish the mixture of antifreeze and clean water (soft water) prepared using the same mixing ratio used for the current coolant.

INSPECTING AND REPLENISHING THE ENGINE OIL

⚠ DANGER

There is a risk of fire. Do not spill engine oil on the alternator. If spilled, immediately wipe it off with a rag or the like.

⚠ WARNING

Stop the engine and allow the machine to cool down before performing maintenance.

Inspection

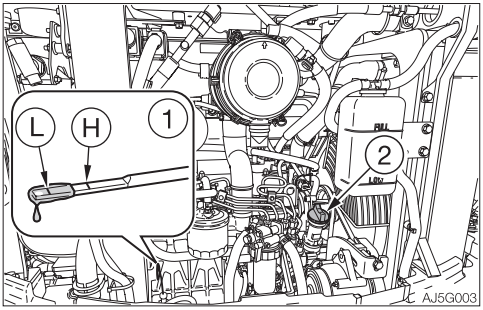

1. Open the engine hood.
2. Take out the dipstick (1) and wipe the oil off with a rag.
3. Fully reinsert the dipstick (1), and then pull it back out.
4. Check the oil on the dipstick (1).
   The level should be between the upper limit (H) and the lower limit (L).
   If it is below the lower limit (L), replenish.

Replenishing

1. Remove the oil filler cap (2).
2. Add oil up to between the upper limit (H) and the lower limit (L) of the dipstick (1). Problems could arise if the oil level is either too low or too high.
3. Tighten the oil filler cap (2).
4. Start the engine, run it at low idle for about 5 minutes, then stop it.
5. After about 10 to 20 minutes, inspect the oil level.

INSPECTING THE WATER SEPARATOR

⚠ WARNING

- **Do not smoke or permit open flames while handling fuel or working on the fuel system.**
- **Stop the engine in a well-ventilated place and allow it to cool down before performing maintenance.**
- **Clean up spilled fuel immediately.**

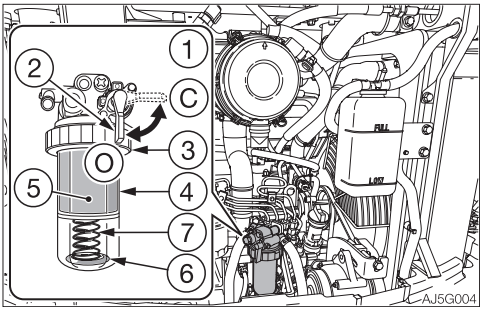

1. Open the engine hood.
2. Check if there is water in the water separator (1).
   If water collects in the separator, the float (red ring) (6) goes up. Be sure to drain water before the float goes up to the element (5),
3. Loose the ring (3) to discharge water collected inside.
   Refer to “Bleeding air from the fuel system” on page 6-11.

INSPECTING THE FUEL LEVEL

⚠ WARNING

- Do not smoke or permit open flames while handling fuel or working on the fuel system.
- Never remove the fuel filler cap or add fuel when the engine is running or still hot. Do not spill fuel on the hot surface of the machine.
- Fill the fuel tank in a well ventilated place.
- Clean up spilled fuel immediately.
- Do not fill the fuel tank to capacity. Allow room for oil expansion.
- Securely tighten the fuel filler cap.
- Use the correct grade of fuel for the operating season.

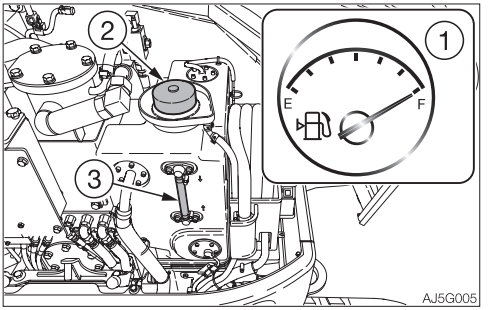

1. Check the fuel level using the fuel gauge (1).
   F: Tank is full.
   E: Tank is empty.
2. If the fuel level is low, open the side cover.
3. Add fuel from the fuel filler port (2) while watching the sight gauge (3).
   Refer to “Fuel filler port” on page 2-7.

INSPECTING THE HYDRAULIC OIL TANK LEVEL AND REPLENISHING

⚠ WARNING

Oil may spurt out if caps or filters are removed or pipes are disconnected before releasing the pressure in the hydraulic system.

- **Press the air breather button to relieve the internal pressure from the tank.**

Inspection

The oil level changes with the oil temperature. Inspect the oil by maintaining the machine at posture shown in the figure at the next.

- Machine posture for inspecting the hydraulic oil level

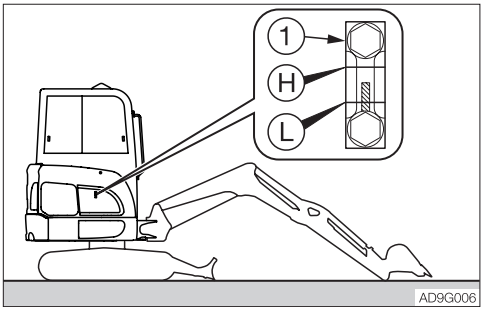

1. Start the engine and run it at low speed.
2. Fully retract the cylinders (arm and bucket), and lower the bucket to the ground.
3. Lower the dozer blade, and then stop the engine.
4. Open the side cover.
5. Inspect the oil level using the sight gauge (1).
   - When the oil temperature is about 20°C (68°F):
     The level should be between the upper limit (H) and the lower limit (L).
     If it is below the lower limit (L), replenish.
   - When the oil temperature is about 50 to 80°C (122 to 176°F):
     The level should be slightly below the upper limit (H).

Replenishing

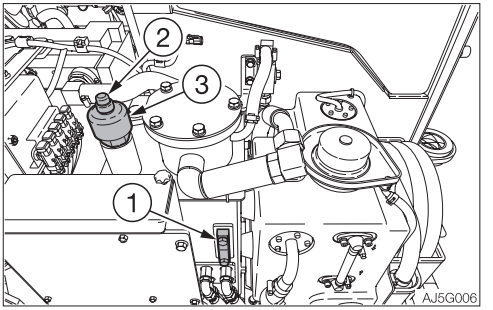

IMPORTANT: Do not fill up to the level higher than the upper limit (H). It will damage the hydraulic circuits or result in oil spurting. If accidentally done, stop the engine and wait the hydraulic oil to cool, and then let the excessive oil to drain from the drain plug.

1. Open the side cover.
2. Press the air breather button (2) to relieve the internal pressure from the tank.
3. Remove the air breather (3).
4. Add the hydraulic oil up to the middle point of the sight gauge (1).
5. Tighten the air breather (3).

LUBRICATING THE WORKING EQUIPMENT

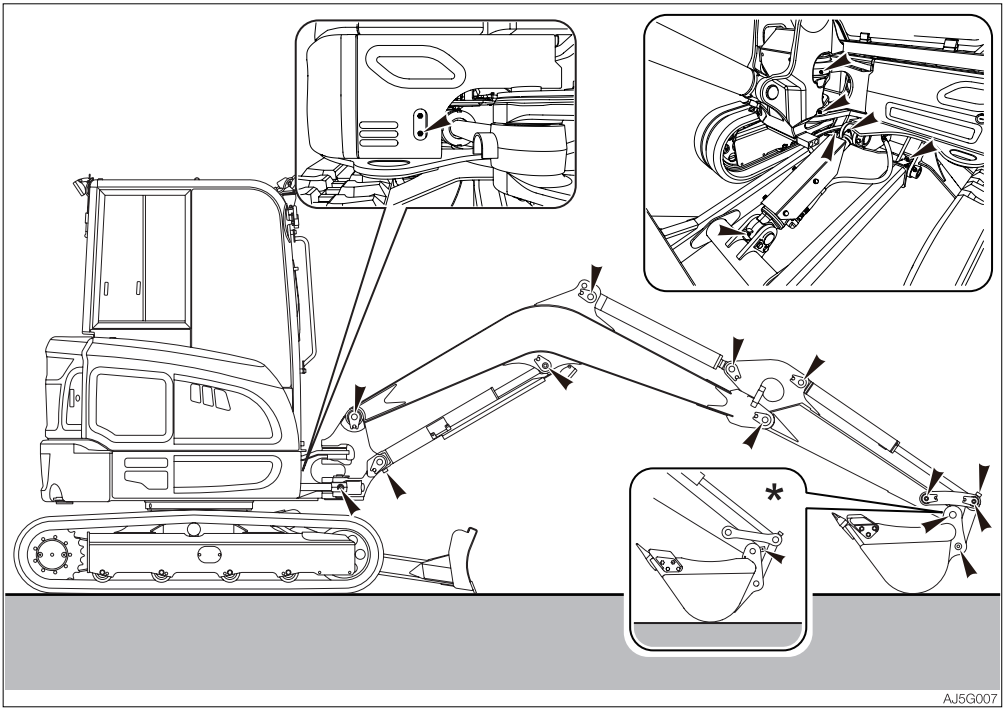

*: for USA

1. Keep the machine configuration as shown in the diagram above, lower the working equipment to the ground, and then stop the engine.
2. Use the grease gun to lubricate the grease fittings.
3. Wipe off the excess grease.

AFTER THE INITIAL 50 HOURS (ONLY FOR NEW MACHINES)

REPLACING THE ENGINE OIL AND THE OIL FILTER

DANGER

There is a risk of fire. Do not spill engine oil on the alternator. If spilled, immediately wipe it off with a rag or the like.

WARNING

Stop the engine and allow the machine to cool down before performing maintenance.

- The engine, muffler, radiator, hydraulic lines, sliding parts and many other parts of the machine are hot immediately after the engine is stopped. Touching these parts will cause burns.
- The engine oil is also hot.
  Be careful not to touch the hydraulic oil when loosening the cap or plug.
  Working on the machine under these conditions could result in burns or injuries.

Engine oil

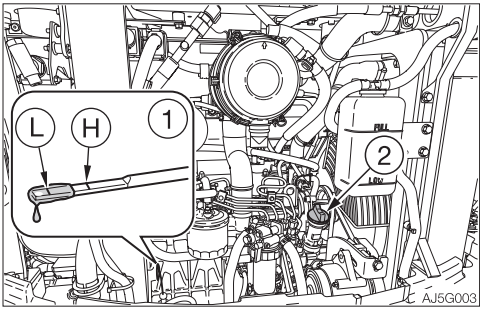

1. Open the engine hood and remove the oil filler cap (2).

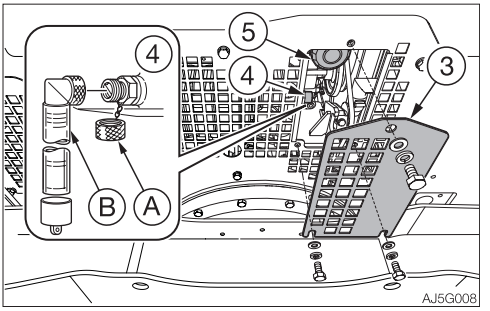

2. Loosen the bolts and remove the undercover (3).
3. Place a pan for catching the waste oil under the drain plug (4).
4. Remove the cap (A), install connector (B) and drain the oil. (The oil comes out when the screw is tightened.)
5. Remove the connector (B) and install the cap (A).
6. Install the undercover (3).

IMPORTANT: Check the waste oil for metal powder. If it contains large amounts of metal powder, consult your sales or service dealer.
IMPORTANT: Do not mix oils of different brands or types.
IMPORTANT: If you change the brand of engine oil, change the whole oil and the oil filter.

Engine oil filter

7. Turn the filter (5) counterclockwise with the filter wrench and remove it.
8. Clean the surface of installation of the filter stand.
9. Apply a thin layer of oil on the packing of the new filter.
10. Install the new filter by hand.
11. Securely tighten the filter by hand after its packing comes in contact with the surface of installation.
12. Add oil up to between the upper limit (H) and the lower limit (L) of the dipstick (1). Problems could arise if the oil level is either too low or too high.
13. Tighten the oil filler cap (2).
14. About 5 minutes after adding fuel, check the oil level.

INSPECTING AND ADJUSTING THE FAN BELT

⚠ WARNING

Stop the engine and allow the machine to cool down before performing maintenance.

- **The engine, muffler, radiator, hydraulic lines, sliding parts and many other parts of the machine are hot immediately after the engine is stopped. Touching these parts will cause burns.**

IMPORTANT: The loose belts could result in bad battery charge, overheat of engine or early wear of belt. Too tight belts could damage the water pump or bearing and belt used to drive the alternator.
IMPORTANT: Do not let any oil or grease get on the belt.

Inspection

1. Open the engine hood.

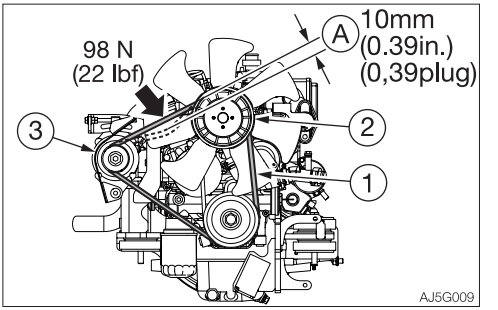

2. Press the fan belt (1) at the midpoint between the fan pulley (2) and alternator pulley (3) to check the tension (approx. 98 N or 22 lbf).
   The slack (A) should be 10 mm (0.39 in.).
3. Inspect the fan belt (1) and replace if it is as follows.
   - There are cuts or cracks.
   - The belt is worn and touches the bottom of the V groove in the pulley.
   - The belt stretched too loose to be adjusted.

Adjustment

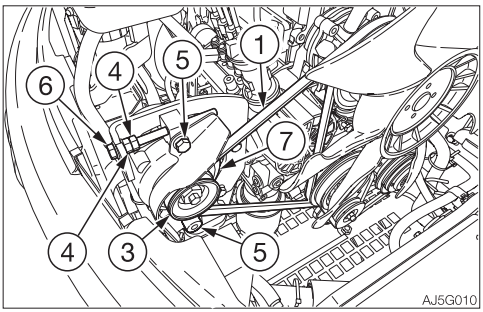

1. Loosen the bolts (5) and locking nuts (4).
2. Turn the adjustment bolt (6) to move the alternator (7) and to adjust the tension of the fan belt (1).
   - Tighten: Clockwise
   - Loosen: Counterclockwise
3. Tighten the bolts (5) and locking nuts (4).

Note: When replacing with a new belt, run the engine at low idle speed for about 3 to 5 minutes to break in the new belt, before adjusting the tension.

INSPECTING AND ADJUSTING THE COMPRESSOR BELT (AC)

⚠ WARNING

- **Stop the engine and allow the machine to cool down before performing maintenance.**
  - **The engine, muffler, radiator, hydraulic lines, sliding parts and many other parts of the machine are hot immediately after the engine is stopped. Touching these parts will cause burns.**
- **The high-pressure pipes of the air conditioner can be very hot (80 to 120°C or 176 to 248°F). Be careful not to burn yourself.**

IMPORTANT: Do not let any oil or grease get on the belt. It will cause the belt to slip, decrease the cooling capacity or shorten the service life of the air conditioner.

If the belt is too slack, it will slip and vibrate, resulting in decreased cooling capacity. The service life of the air conditioner also will be shortened. Adjust the belt tension to the standard value.

Inspection

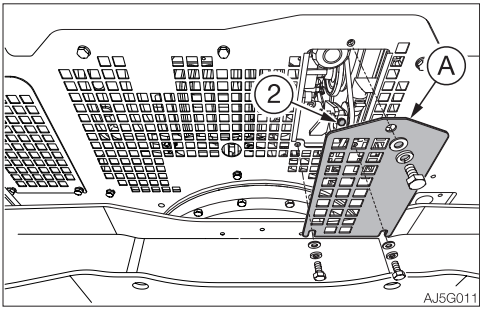

1. Loosen the bolts and remove the cover (A).

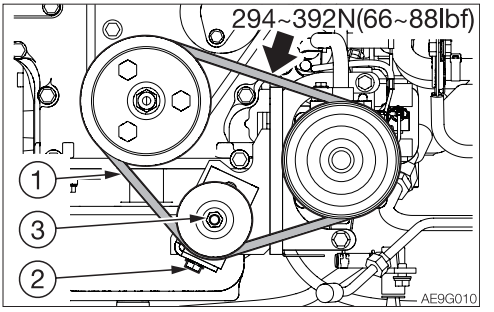

2. Measure the belt (1) tension using the belt tension gauge. The belt tension is normal if the belt tension gauge indicates the following values.
   294 to 392 N or 66 to 88 lbf.

Adjustment

If the belt tension is not normal, adjust it with the adjuster bolt (2).

1. Loosen the locking nut (3).
2. Loosen the nut attached to the adjuster bolt (2).
3. Turn the adjuster bolt (2) as follows.
   - Tighten: Clockwise
   - Loosen: Counterclockwise
4. Tighten the locking nut (3) after adjustment.
   Tightening torque:
   - Locking nut (3) 39 N·m (28.8 ft-lb.)

Note: When replacing with a new belt, run the engine at low idle speed for about 3 to 5 minutes to break in the new belt, before adjusting the tension again.

Replacing

Replace the belt in the following cases:

- There are cuts or cracks.
- The belt is worn and touches the bottom of the V groove in the pulley.
- The belt stretched too loose to be adjusted.

EVERY 50 HOURS

INSPECTING AND ADJUSTING THE CRAWLER TENSION

⚠ WARNING

- If you must work beneath the raised machine or working equipment, always use wood blocks, jack-stands or other rigid and stable supports. Never get under the machine or working equipment if they are not sufficiently supported. This procedure is especially important when working on hydraulic cylinders.
- Be careful with the high-pressure grease In the track adjuster, the grease has been injected under high pressure. If the tension is adjusted without following the prescribed procedure, the grease discharge valve may fly off, resulting in injury.
  - Never loosen the grease fitting.
  - Loosen the grease discharge valve slowly. Do not turn it more than one turn.
  - Do not put your face, arms, legs or body in front of the grease discharge valve.
  - If grease does not come out when the grease discharge valve is loosened, the valve is faulty. Ask a Takeuchi service agent for repair.

Inspection

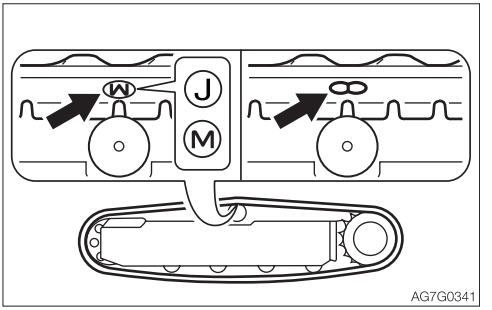

1. For rubber crawlers, move the machine so that the “M”, “J” or “∞” mark at the joint is at the top center of the crawler frame.

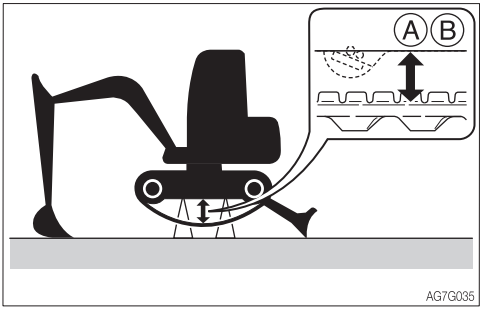

2. Use the working equipment to lift the machine body. Operate the levers slowly.

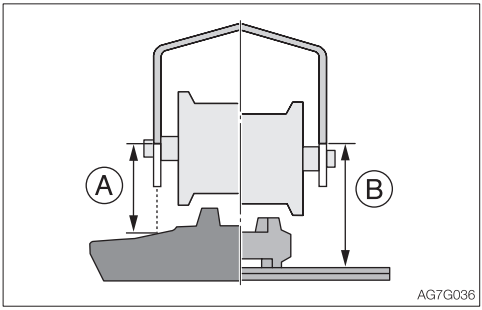

3. Inspect the gap (A or B) between the bottom surface of the frame at the center of the crawler frame and the top surface of the crawler.
   The gap (A or B) must be within the following range:

   (A) Rubber crawler
   77 to 87 mm (3.0 to 3.4 in.)
   (B) Steel crawler
   144 to 154 mm (5.7 to 6.1 in.)
   (B) Rubber pads
   144 to 154 mm (5.7 to 6.1 in.)

Adjustment

Increasing the tension

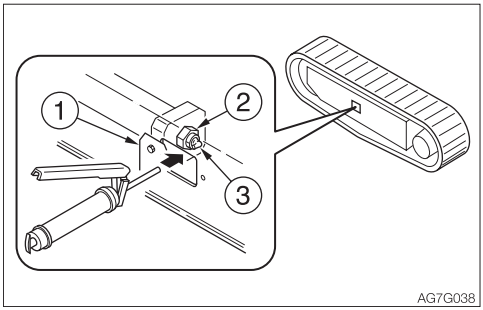

1. Remove the cover (1).
2. Using the grease gun, insert grease through the grease fitting (3) in the grease discharge valve (2).
3. Inspect the crawler tension.

Decreasing the tension

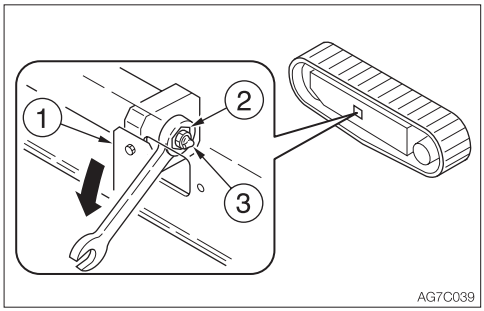

1. Remove the cover (1).
2. Using the spanner, slowly loosen the grease discharge valve (2) (one turn) and drain the grease.
   If the grease does not drain easily, move the machine forward or backward.
3. Tighten the grease discharge valve (2).
   · Tightening torque: 59 to 88 N·m (43.5 to 64.9 ft-lb.)

LUBRICATING THE SLEW BEARING

⚠ WARNING

Do not slew while lubricating. Doing so is dangerous, as you may get caught in the machine.

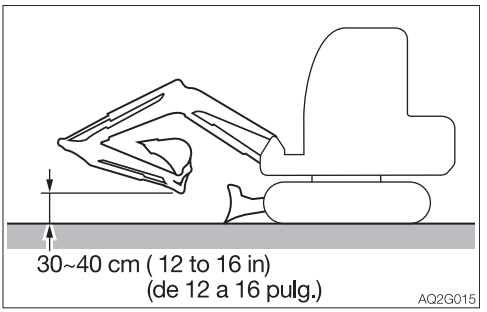

1. Stop the engine with the machine in the posture shown on the figure above.

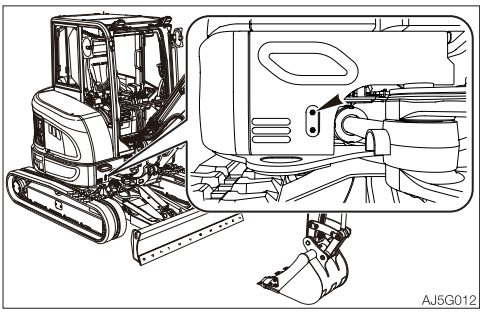

2. Use the grease gun to grease the grease fitting (1).

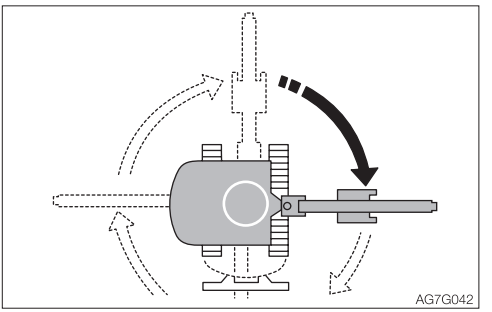

3. Start the engine, lift the bucket and slew clockwise 90°.
4. Lower the bucket to the ground, and then stop the engine.
5. Repeat the steps 2 to 4 above three times.
6. Wipe off the grease expelled from the slew bearing and grease fitting.

DRAINING THE WATER FROM THE FUEL TANK

⚠ WARNING

- **Do not smoke or permit open flames while handling fuel or working on the fuel system.**
- **Never remove the fuel filler cap or add fuel when the engine is running or still hot. Do not spill fuel on the hot surface of the machine.**
- **Fill the fuel tank in a well ventilated place.**
- **Do not fill the fuel tank to capacity. Allow room for oil expansion.**
- **Clean up spilled fuel immediately.**
- **Securely tighten the fuel filler cap.**
- **Use the correct grade of fuel for the operating season.**

Do the draining operation before starting the machine.

1. Slew the machine to the right by 90 degrees.
2. Open the side cover.

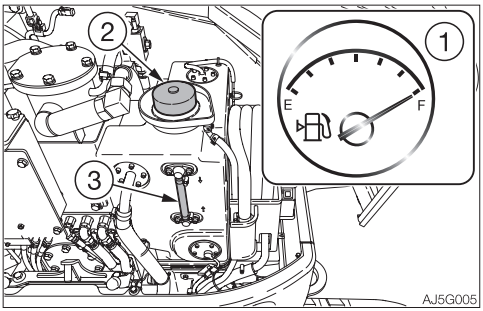

3. Remove the fuel filler cap (2).

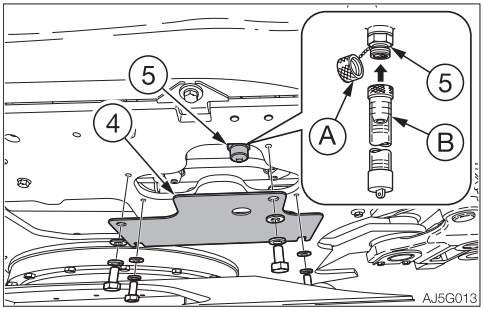

4. Remove the undercover (4).
5. Place a pan under the drain valve (5).
6. Remove the cap (A), install the connector (B), and then drain the water and sediment buildup in the bottom of the tank (the water comes out when the screw is tightened).
7. Remove the connector (B) and install the cap (A).
8. Add fuel while watching the sight gauge (3).
9. Tighten the fuel filler cap (2).
10. Close the side cover and lock it with the key.
11. Bleed air.

Bleeding air from the fuel system

Refer to “Bleeding air from the fuel system” on page 6-11.

Note: Air in the fuel system causes the engine to fail to start or to have problems. Bleed air when the fuel tank is emptied, using the same procedure above.

INSPECTING THE BATTERY FLUID LEVEL AND REPLENISHING

⚠ DANGER

- **Do not use or charge the battery when the battery indicator is white. The battery is at its end of life. Immediately replace the battery.**
- **Batteries generate flammable hydrogen gas which may explode. Keep away from flame, sparks, fire or lighted cigarettes.**
- **Use a dampened cloth to clean the battery indicator and check the fluid level. Do not clean with a dry cloth; it can cause static electricity to build up, resulting in ignition or explosion.**
- **Do not use the cable if it's connecting terminal is loose or corroded. If used, ignition or explosion may occur.**

⚠ WARNING

- **Wear protective goggle and clothing when working with batteries.**
- **Do not tilt the battery. Doing so could cause the battery fluid to leak out of the exhaust hole. If contacted, it may cause skin irritation or the machine part corrosion.**
- **Batteries contain sulfuric acid which will damage eyes or skin if contacted.**
  - **If eye contact occurs, flush immediately with clean water and get prompt medical attention.**
  - **If accidentally swallowed, drink large quantities of water or milk and call a physician immediately.**
  - **If acid contacts skin or clothing, wash off immediately with a lot of water.**

Inspection

Turn the starter switch to ON and check the battery voltage on the display. The battery is normal if the voltage is 12 V or more.
Refer to "Data display" on page 2-34 or 2-64.

Note: Under normal operating conditions, the maintenance-free battery does not require addition of water because of the special plate designed to minimize fluid loss.

1. Open the side cover.
2. Inspect the indicator (1).

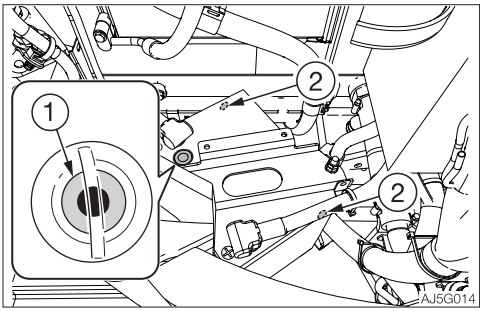

- Green: Good
- Black: Charging needed
- White: Replace the battery

3. Check the battery terminal for looseness, dirt and corrosion.
4. Check the exhaust holes (2) for dirt.
5. Check the battery voltage. Confirm it is 12 V or more.

Refer to "Data display" on page 2-34 or 2-64.

MEMO

EVERY 100 HOURS

CLEANING THE WATER SEPARATOR

⚠ WARNING

- Do not smoke or permit open flames while handling fuel or working on the fuel system.
- Stop the engine in a well-ventilated place and allow it to cool down before performing maintenance.
- Clean up spilled fuel immediately.

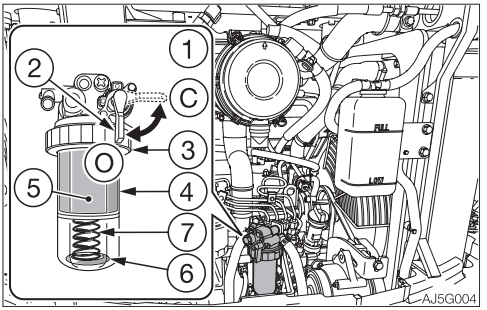

(O): Open
(C): Close

1. Open the engine hood.
2. Close the valve (2).
3. Loosen the ring (3), and then remove and clean the case (4), element (5) indicator ring (6) and spring (7).
4. Inspect the O-ring and the element (5). If there are any scratches or other irregularities, replace them.
5. Install the indicator ring (6), spring (7), element (5) and case (4), and then tighten the ring (3).
6. Open the valve (2) to bleed air. Refer to “Bleeding air from the fuel system” on page 6-11.

CLEANING THE AIR CLEANER

⚠ WARNING

- Stop the engine and allow the machine to cool down before performing maintenance.
  - The engine, muffler, radiator and many other parts of the machine are hot immediately after the engine is stopped. Touching it will cause burns.
- Wear required appropriate equipment such as protective goggle and filter mask when using compressed air, as metal fragments or other objects can fly and cause serious injury.

IMPORTANT: Be careful not to scratch the element. Do not use an element if it is damaged.
IMPORTANT: When operating the machine in very dusty places, perform inspection and maintenance operations every day.
IMPORTANT: Be sure to install the element and dust cap securely. If not, dust could be drawn into the cylinder, damaging the engine.

1. Open the engine hood.

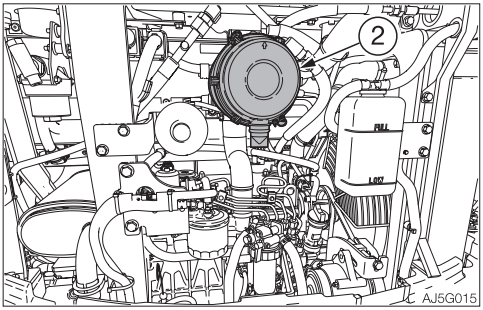

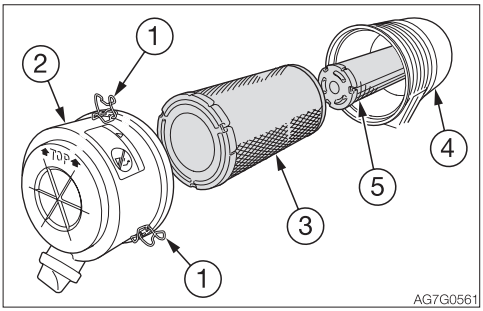

2. Loosen the clamps (1) and remove the dust cup (2).
3. Clean the inside of the dust cup (2).
4. Remove the primary element (3).
   To prevent dirt from getting inside the engine, do not remove the secondary element (5).
5. Clean the inside of the body (4).

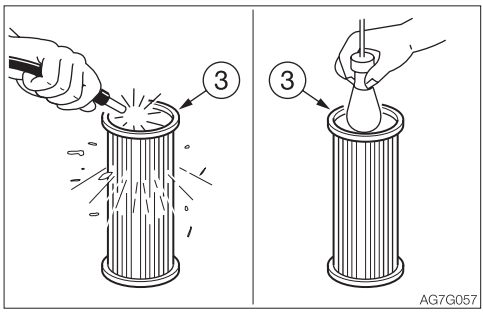

6. Clean the primary element (3) with dried compressed air (294 to 490 kPa or 43 to 71 psi).
   First blow the air from the inside of the element along the pleats. Then blow the air from the outside and finally from the inside again.
7. Light up the inside of the primary element (3) with a light bulb, inspect it, and replace it if there are small holes or thin spots.
8. Install the primary element (3).
9. Install the dust cup (2) with its "⬆ TOP" mark facing up, and then fasten it with the clamps (1).

AFTER THE INITIAL 250 HOURS (ONLY FOR NEW MACHINES)

REPLACING THE HYDRAULIC OIL RETURN FILTER

⚠ WARNING

- Stop the engine and allow each part of the machine to cool down before performing maintenance.
  - The engine, the hydraulic system and many other parts of the machine are hot immediately after the engine is stopped. Touching these parts will cause burns.
  - The hydraulic oil is also hot and under high pressure immediately after the engine is stopped.
    Be careful not to touch the oil when loosening the cap or plug. Working on the machine under these conditions could result in burns or injuries due to the hot oil spurting out.
- Oil may spurt out if caps or filters are removed or pipes are disconnected before releasing the pressure in the hydraulic system.
  - Press the air breather button to relieve the internal pressure from the tank.
  - When removing plugs or screws, or when disconnecting hoses, stand to the side and loosen them slowly to gradually release the internal pressure before removing.

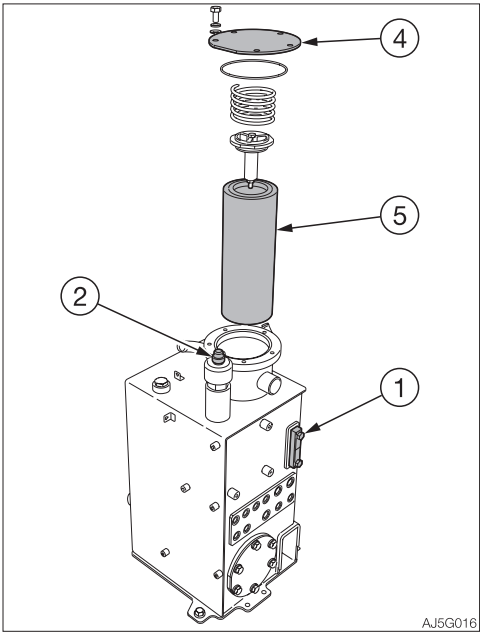

1. Open the side cover.
2. Press the air breather button (2) to relieve the internal pressure from the tank.
3. Loosen the bolts and remove the flange (4).
4. Remove the return filter (5).
5. Install a new return filter.
6. Install the flange (4) on its original position.
7. Inspect the level with the sight gauge (1), and replenish if the level is too low.
   Refer to “Inspecting the hydraulic oil tank level and replenishing” on page 5-26.

REPLACING THE PILOT LINE FILTER

⚠ WARNING

- Stop the engine and allow each part of the machine to cool down before performing maintenance.
  - The engine, the hydraulic system and many other parts of the machine are hot immediately after the engine is stopped. Touching these parts will cause burns.
  - The hydraulic oil is also hot and under high pressure immediately after the engine is stopped. Be careful not to touch the oil when loosening the cap or plug. Working on the machine under these conditions could result in burns or injuries due to the hot oil spurting out.
- Oil may spurt out if caps or filters are removed or pipes are disconnected before releasing the pressure in the hydraulic system.
  - Press the air breather button to relieve the internal pressure from the tank.
  - When removing plugs or screws, or when disconnecting hoses, stand to the side and loosen them slowly to gradually release the internal pressure before removing.

1. Open the side cover.

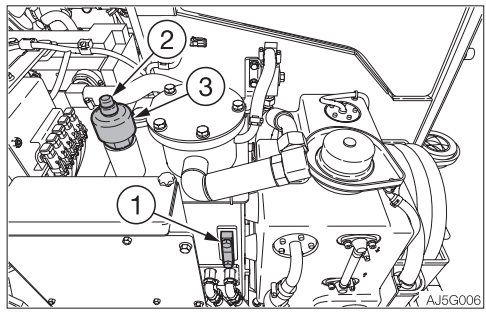

2. Press the air breather button (2) to relieve the internal pressure from the tank.

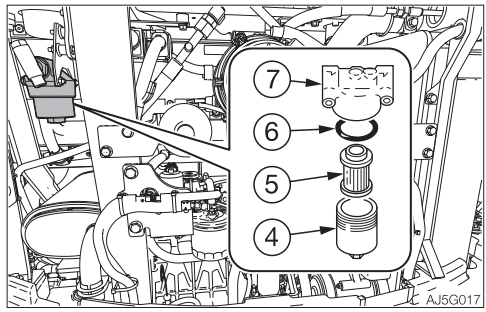

3. Open the engine hood.
4. Turn the case (4) counterclockwise and remove it.
5. Remove the element (5) and O-ring (6).
6. Clean the inside of the case (4).
7. Apply a thin layer of oil on the O-ring of the new filter.
8. Install the new element on the filter stand (7).
9. Apply a thin layer of oil on the new O-ring (6).
10. Install the new O-ring (6) and the case (4) on the filter stand (7).
    - Case (4) tightening torque: 25 to 35 N·m (18.4 to 25.8 ft-lb)
11. Inspect the level with the sight gauge (1) and replenish if the level is too low.
    Refer to “Inspecting the hydraulic oil tank level and replenishing” on page 5-26.

REPLACING THE TRAVEL MOTOR GEAR OIL

⚠ WARNING

- Stop the engine and allow the machine to cool down before performing maintenance.
  - The travel motor is hot immediately after the engine is stopped. Touching it will cause burns.
  - The gear oil is also hot and under high pressure immediately after the engine is stopped.
    Be careful when loosening the plugs. Working on the machine under these conditions could result in burns or injuries.
- The pressure in the reduction gear case of travel motor may cause oil or the plug to fly out. Loosen the plug slowly to release the pressure.

IMPORTANT: If the percentage of the traveling time within the total operating time is high, replace the gear oil earlier than the specified time.

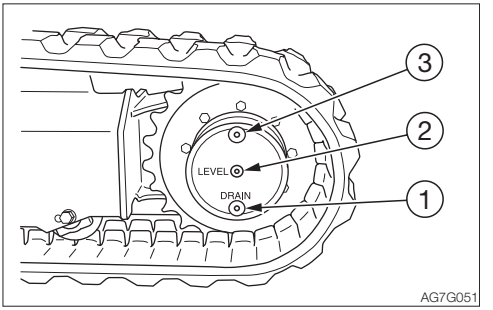

1. Set the travel motor so that plug (1) is at the very bottom.
2. Place a pan under the plug (1).
3. Remove the plugs (1), (2) and (3) and drain the oil.
4. Rewrap the plugs with new sealing tape.
5. Tighten the plug (1).
   - Plug (1) tightening torque: 46 to 51 N·m (34 to 37.6 ft-lb)
6. Add oil through the hole of the plug (3) until oil flows out of the hole of the plug (2).
7. Tighten the plugs (2) and (3).
   - Plug (2) tightening torque: 12 to 18 N·m (8.8 to 13.3 ft-lb)
   - Plug (3) tightening torque: 46 to 51 N·m (34 to 37.6 ft-lb)

EVERY 250 HOURS

INSPECTING AND ADJUSTING THE FAN BELT

Refer to “Inspecting and adjusting the fan belt” on page 5-30.

INSPECTING AND ADJUSTING THE COMPRESSOR BELT (AC)

Refer to “Inspecting and adjusting the compressor belt (AC)” on page 5-32.

REPLACING THE ENGINE OIL AND THE OIL FILTER

Refer to “Replacing the engine oil and the oil filter” on page 5-28.

CLEANING THE RADIATOR FINS AND THE OIL COOLER FINS

⚠ WARNING

Wear required appropriate equipment such as protective goggle and filter mask when using compressed air, as metal fragments or other objects can fly and cause serious injury.

IMPORTANT: Be careful not to damage the fins when cleaning.

- **When using compressed air or pressurized water, make sure the pressure is no higher than 200 kPa (28 psi) and hold the nozzle sufficiently away from the fins.**

IMPORTANT: When using water, cover the electrical system to prevent water from getting in.

IMPORTANT: When operating the machine in very dusty places, perform inspection and maintenance operations every day.

1. Open the side cover.

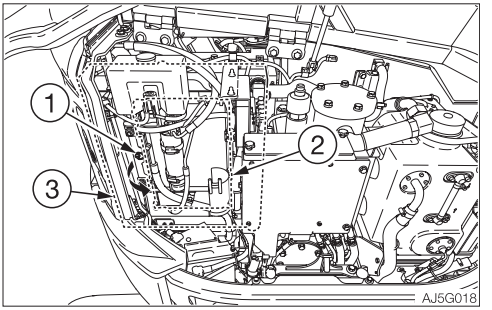

2. Release the lock by pushing and turning the pull ring (1) counterclockwise.
3. Open the condenser (2).
4. Blow compressed air on the fins (3) to remove adhered mud and dirt.

CLEANING THE AIR FILTERS (AC)

⚠ WARNING

Wear required appropriate equipment such as protective goggle and filter mask when using compressed air, as metal fragments or other objects can fly and cause serious injury.

Clean the filters immediately after operating in dusty places.
If the filters are clogged, the air flow is reduced and a booming sound is heard from the air conditioner unit.

Removing the filters

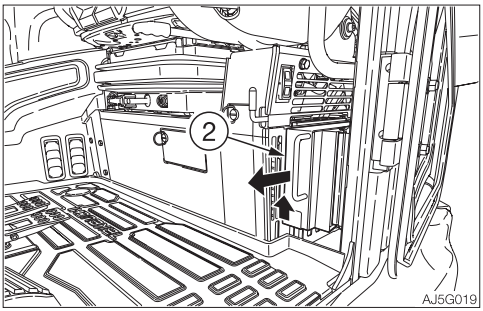

1. Open the cab door.
2. Lift the ventilation filter (2) upward, and then pull it out toward you to remove it.
   Ventilation filter (2): Part No. 19115-13680

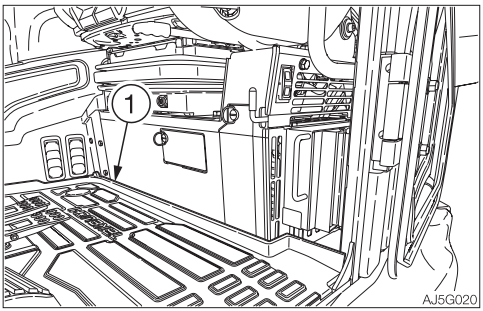

3. Remove the floor mat (1).

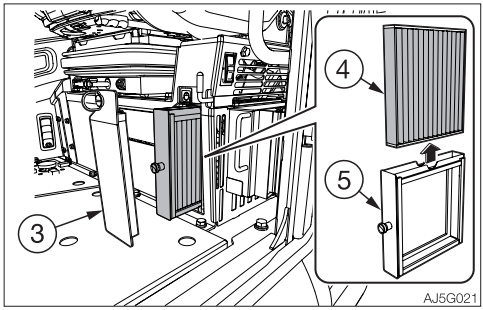

4. Remove the cover (3).
5. Remove the circulation filter (4) from the filter case (5).
   Circulation filter (4): Part No. 19115-17803
6. Use compressed air or water to clean the filters, depending on how dirty they are.

Cleaning

1. Blow dry, compressed air (138 kPa or 20 psi or less) directly on the filters from the inside, moving up and down along the pleats.
   Be sure to keep the nozzle at an adequate distance from the filters.
2. Wash the filter with neutral detergent if it is very dirty. Dry the filter completely after washing it.

Replacing

Replace the filter with a new one once a year or if it is still clogged after blow-drying with compressed air and washing.

CLEANING THE CONDENSER (AC)

⚠ WARNING

Wear required appropriate equipment such as protective goggle and filter mask when using compressed air, as metal fragments or other objects can fly and cause serious injury.

IMPORTANT: Be careful not to damage the fins when cleaning.

- **When using compressed air or pressurized water, make sure the pressure is no higher than 200kPa (28 psi) and hold the nozzle sufficiently away from the fins.**

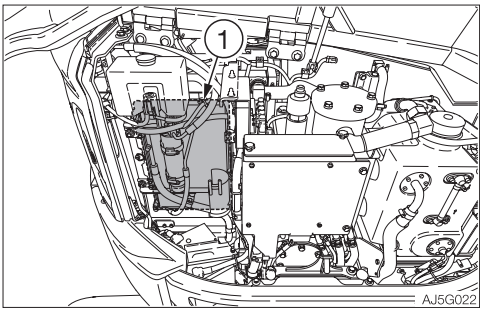

1. Open the side cover.
2. Clean the condenser (1).

MEMO

INSPECTING THE REFRIGERANT (GAS) LEVEL (AC)

⚠ WARNING

- **Exposure of the eyes or hands to the cooler's refrigerant could result in blindness or frostbite. Never touch the refrigerant or loosen the parts of the cooling circuit.**
- **Keep flames away if the refrigerant gas is leaking.**
- **The high-pressure pipes of the air conditioner can be very hot (80 to 120°C or 176 to 248°F). Be careful not to burn yourself.**

The cooling capacity decreases if the amount of refrigerant is insufficient. Inspect the refrigerant level using the sight glass (2) on the top of the receiver dryer (1).

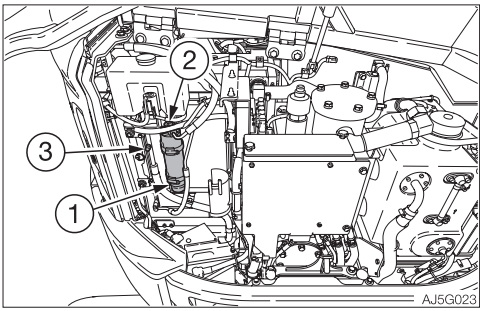

1. Open the side cover.
2. Inspect the places for the conditions below.

Places for inspection	Conditions
Cab door	Fully open
Temperature control	COOL
Fan speed	High
Ventilation/Circulation select lever	Circulation
Engine speed	Maximum speed
Air conditioner symbol	ON

3. Inspect the refrigerant by watching the flow of air bubbles through the sight glass (2).
   Refer to "Check list for refrigerant volume" on page 5-51.

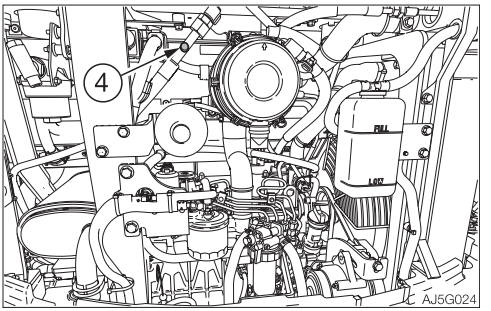

4. Check the temperature of the compressor's high pressure pipe (3) and low pressure pipe (4).
   Refer to "Check list for refrigerant volume" on page 5-51.

Check list for refrigerant volume

Air conditioner	Normal	Abnormal		
High/low pressure pipe temperature	High pressure pipe is hot (80 to 120°C or 176 to 248°F), low pressure pipe is cold (8 to 15°C or 46 to 59°F). Clear difference in temperature between the pipes.	High pressure pipe is warm, low pressure pipe is slightly cool. No significant difference in temperature between the pipes.	Little difference in temperature between the high-pressure pipe and the low-pressure pipe.	High pressure pipe is hot, low pressure pipe is slightly cool. A significant difference in temperature between the pipes.
Pipe connection	Normal	Some places are dirty with oil.	Some places are extremely dirty with oil.	Normal
Sight glass	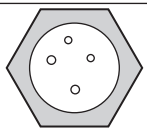 AG7G064 Almost transparent with some bubbles. Fully transparent when the engine speed is increased or decreased.	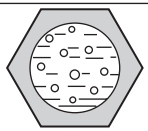 AG7G065 Flow of bubbles can be seen constantly. Sometimes transparent or white with bubbles.	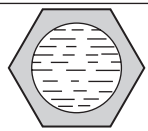 AG7G066 Mist-like flow is faintly visible.	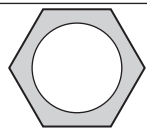 AG7G067 No bubbles is visible, even when the fan is set to High and the engine is idling.
Refrigerant level	Proper level	Refrigerant may be leaking.	Refrigerant has leaked; little is left.	Refrigerant level too high

If the air conditioner is not working
If the air conditioner does not work well, set the fan switch to OFF and contact your sales or service dealer for inspection and/or repairs.

IMPORTANT: Continued use of the air conditioner when it is not working properly will damage its various parts.
IMPORTANT: Using the air conditioner when there is no refrigerant will damage the compressor.
IMPORTANT: Always consult your sales or service dealer for replacing the refrigerant. Be sure to use R134a refrigerant (610 to 690 g or 1.39 to 1.52 lb.).

EVERY 500 HOURS

REPLACING THE FUEL FILTER

⚠ WARNING

- **Do not smoke or permit open flames while handling fuel or working on the fuel system.**
- **Stop the engine in a well-ventilated place and allow it to cool down before performing maintenance.**
- **Clean up spilled fuel immediately.**

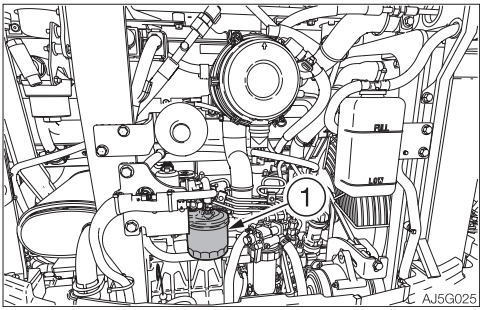

1. Open the engine hood.
2. Turn the filter (1) counterclockwise with the filter wrench and remove it.
3. Clean the surface of installation of the filter stand.
4. Apply a thin layer of oil on the packing of the new filter.
5. Install the new filter on the filter stand and tighten the filter firmly by hand.
6. Bleed the air.
   Refer to “Bleeding air from the fuel system” on page 6-11.

REPLACING THE WATER SEPARATOR FILTER

⚠ WARNING

- **Do not smoke or permit open flames while handling fuel or working on the fuel system.**
- **Stop the engine in a well-ventilated place and allow it to cool down before performing maintenance.**
- **Clean up spilled fuel immediately.**

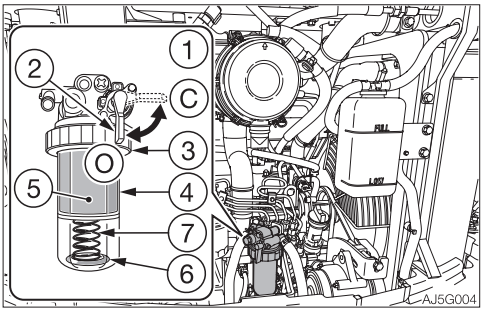

(O): Open
(C): Close

1. Open the engine hood.
2. Close the valve (2) of the water separator (1).
3. Place a pan for catching fuel under the drain hose.
4. Loosen the ring (3), and then remove and clean the case (4), element (5), indicator ring (6) and spring (7).
5. Replace the packing with a new one and lubricate it with diesel fuel.
6. Install the new element (5) on the filter stand.
7. Install the indicator ring (6), spring (7) and case (4), and then tighten the ring (3).
8. Open the valve (2) to bleed air.
   Refer to “Bleeding air from the fuel system” on page 6-11.

INSPECTING THE SLEW PINION GEAR

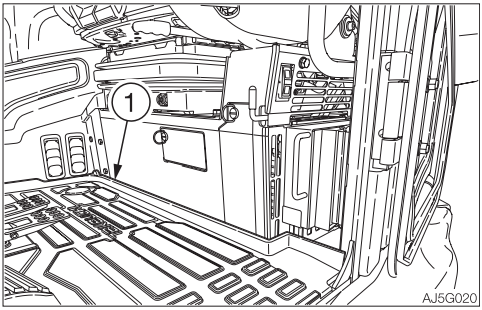

1. Remove the floor mat (1).

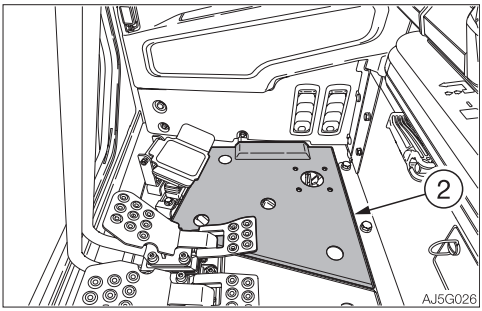

2. Remove the cover (2).

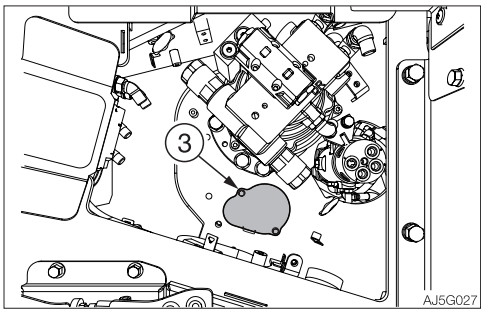

3. Loosen the bolts and remove the cover (3).

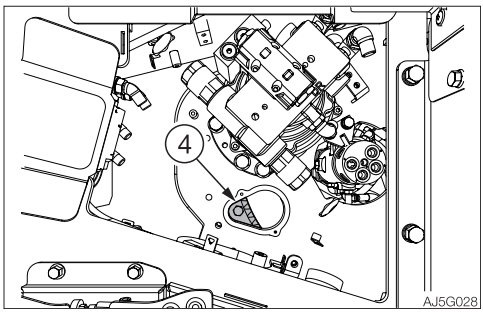

4. Make sure that the gear tooth surface (4) of the slew bearing is well greased.
   If the surface (4) is not adequately greased, add grease.
   If the grease has turned white due to water or mud entered it, replace the whole grease. Consult your sales or service dealer for help.
   Grease full capacity: 5.1 L (1.3 US gal) or 4.6 kg (10 lbs.)
5. Install the cover (3) and tighten the bolts.
6. Install the cover (2).
7. Install the floor mat (1).

REPLACING THE AIR CLEANER ELEMENT

⚠ WARNING

Stop the engine and allow the machine to cool down before performing maintenance.

- **The engine, muffler, radiator and many other parts of the machine are hot immediately after the engine is stopped. Touching these parts will cause burns.**

IMPORTANT: Do not use an element if its pleats, gaskets or seals are damaged.
IMPORTANT: Be sure to install the element and dust cap securely. If not, dust could be drain into the cylinder, damaging the engine.

1. Open the engine hood.

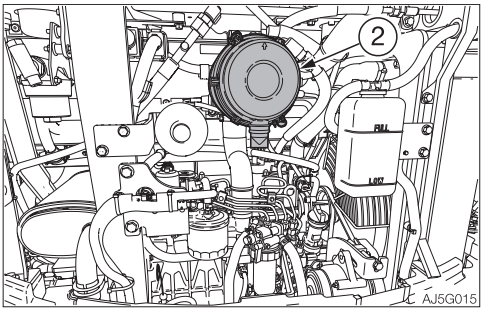

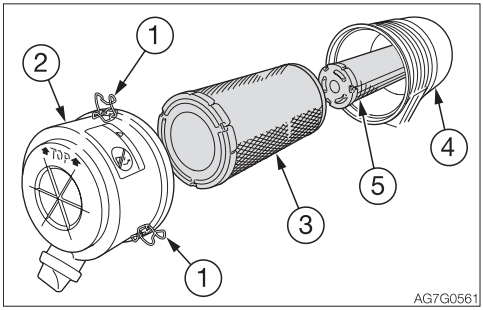

2. Loosen the clamps (1) and remove the dust cup (2).
3. Clean the inside of the dust cup (2).
4. Remove the primary element (3).
   Do not remove the secondary element yet.
5. Clean the inside of the body (4).
6. Remove the secondary element (5).
7. Install the new elements. Press them firmly into the body (4).
8. Install the dust cup (2) with its "⬆ TOP" mark facing up, and then fasten it with the clamps (1).

REPLACING THE FAN BELT

This operation requires experience. Ask a Takeuchi service dealer for it.
Replace the fan belt after two-year operation even if the running time is less than 500 hours.

CLEANING THE WATER JACKET (INSIDE THE RADIATOR)

This operation requires experience. Ask your sales or service dealer for it.

EVERY 1000 HOURS

REPLACING THE HYDRAULIC OIL RETURN FILTER

Refer to “Replacing the hydraulic oil return filter” on page 5-42.

REPLACING THE PILOT LINE FILTER

Refer to “Replacing the pilot line filter” on page 5-43.

REPLACING THE TRAVEL MOTOR GEAR OIL

Refer to “Replacing the travel motor gear oil” on page 5-44.

REPLACING THE AIR BREATHER FILTER

⚠ WARNING

Oil may spurt out if caps or filters are removed or pipes are disconnected before releasing the pressure in the hydraulic system.

- **Press the air breather button to relieve the tank pressure.**

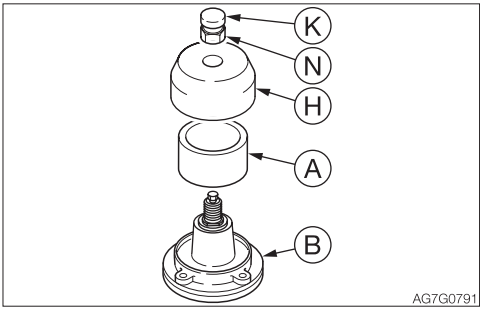

1. Open the side cover.
2. Press the button (K) to relieve the internal pressure from the tank.
3. Remove the nut (N) on the air breather.
4. Remove the cover (H).
5. Replace the filter (A).
6. Install the cover (H) on the body (B).
7. Install the nut (N).

INSPECTING AND ADJUSTING THE ENGINE VALVE CLEARANCE

This operation requires experience. Ask your sales or service dealer for it.

EVERY 1500 HOURS

INSPECTING AND CLEANING THE FUEL INJECTION NOZZLE

This operation requires experience. Ask your sales or service dealer for it.

EVERY 2000 HOURS

CLEANING THE ENGINE COOLING SYSTEM

Note: Add cooling water even if the running time is less than 2000 hours in two years. Also, if the running time reaches 2000 hours within two years from the first operation, add cooling water.

⚠ WARNING

- **Stop the engine and allow the machine to cool down before performing maintenance.**
  - **The engine, muffler, radiator and many other parts of the machine are hot immediately after the engine is stopped. Touching these parts will cause burns.**
  - **The engine coolant is also hot and under high pressure immediately after the engine is stopped. Be careful when loosening the caps or plugs. Working on the machine under these conditions could result in burns or injuries due to the hot coolant spurting out.**
- **If maintenance must be performed with the engine running, always work as a two person team communicating each other.**
  - **One person must sit in the operator's seat so that he/she can immediately stop the engine when necessary. He/she must take care not to touch the lever or pedal unless necessary.**
  - **The one who performs maintenance must make sure to keep his/her body or clothing away from the moving part of the machine.**
- **Standing at the back of the machine while the engine is running is extremely dangerous, as the machine could move suddenly. Never stand at the back of the machine while the engine is running.**
- **Do not remove the radiator cap or the drain plug when the cooling water is hot. Stop the engine and wait until the engine and the cooling water cool. Then, slowly loosen the radiator cap and the drain plug to remove them.**

When cleaning, if the temperature of the coolant is low, the thermostat will be closed and the coolant will not circulate in the radiator. Heat the coolant water to at least 90°C (194°F) before cleaning.

1. Open the engine hood.

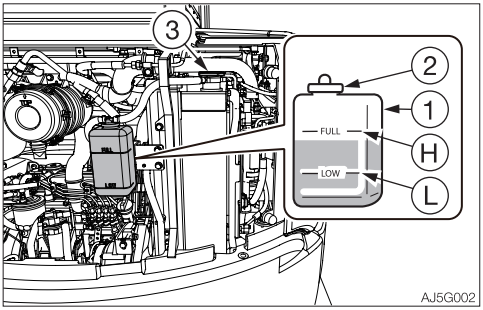

2. Gradually loosen the radiator cap (3) to release the internal pressure, and then remove the cap.

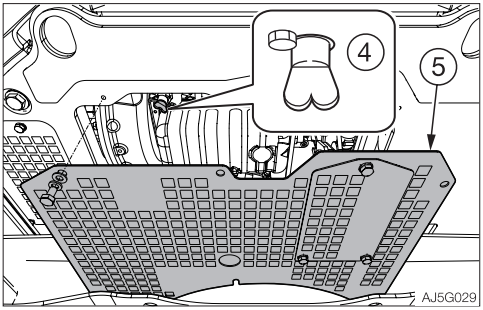

3. Loosen the bolts and open the cover (5).
4. Place a pan for catching the waste coolant under the drain plug (4), and then loosen the drain plug (4) to drain the coolant.
5. Tighten the drain plug (4).
6. Add tap water to the radiator through the coolant fill port up to the top of the port. Take time and slowly add water, so that no air enters the radiator.
7. Close the radiator cap (3).
8. Start the engine and run it at a speed slightly above low idling. Raise the water temperature to at least 90°C (194°F), and then run the engine for about 10 minutes with the thermostat open.
9. Stop the engine, wait until the cooling water temperature becomes lower, and then remove the drain plug (4) to drain the water.
10. After draining, clean the cooling system using a cleaning agent. When using the cleaning agent, follow the instructions included with the agent.
11. Repeat the steps 4 to 8 to rinse the cooling system.
12. Tighten the drain plug (4).
13. Take time and slowly add the new coolant (mixture of antifreeze and tap water) to the radiator through the fill port until it is full.
14. Close the radiator cap (3).
15. Warm up the engine. Use the meters to check that there are no irregularities in the cooling system at this time.

16. Increase the water temperature to at least 90°C (194°F). Then, run the engine for about 10 minutes with the thermostat kept open.
17. Stop the engine, wait until the cooling water temperature becomes lower, and then check the level of coolant in the radiator.
    If necessary, add cooling water until the radiator is full.
18. Close the radiator cap (3).
19. Clean the interior of the reserve tank (1), and then add coolant to the upper limit (H).
20. When the coolant has been replaced, inspect the coolant level once again after operating the machine.
    When the machine is operated, the coolant is distributed throughout the entire system, resulting in the lower coolant level.
    Add coolant up to the full level.

INSPECTING THE ACCUMULATOR

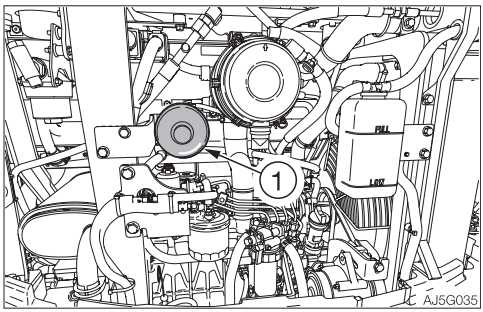

⚠ WARNING

- **High-pressure nitrogen gas is enclosed in the accumulator (1). If handled incorrectly, it could explode and cause serious injury. Strictly observe the following precautions:**
  - **Do not disassemble.**
  - **Do not allow flame nearby or throw it into a fire.**
  - **Do not drill, weld or fuse.**
  - **Do not subject it to physical shock such as hitting, rolling or dropping.**
  - **Before disposing of the unit, the sealed gas must be drained. Contact a Takeuchi sales or service dealer for help.**
- **Clear all personnel from the work area.**
- **Sound the horn to warn people around the machine.**

IMPORTANT: If the accumulator (1) fails, the boom cannot be lowered or the residual pressure in the hydraulic circuit cannot be released while the engine is stopped.

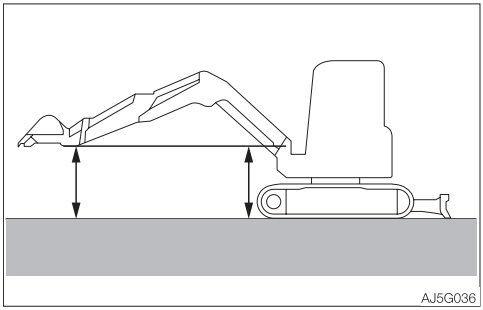

1. Start the engine, then fully retract the arm and bucket cylinders.
2. Operate the boom so that the tip of the arm is positioned at the bottom of the boom.

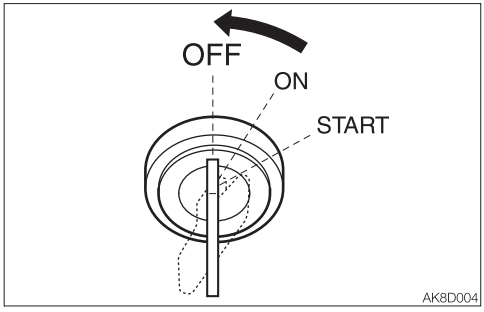

3. Turn the starter key to the OFF position to stop the engine.

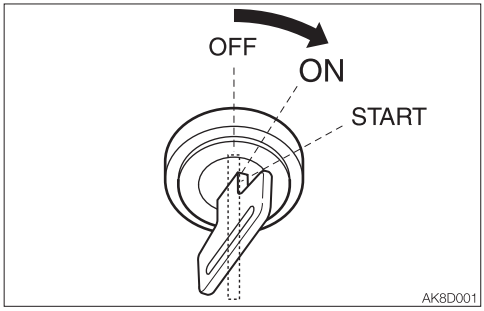

4. Turn the key to the ON position. (Do not start the engine.)

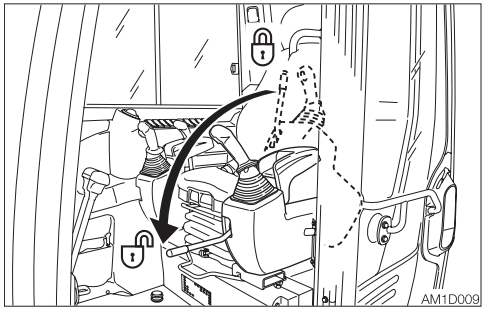

5. Fully lower the safety lock lever to disengage the lock.

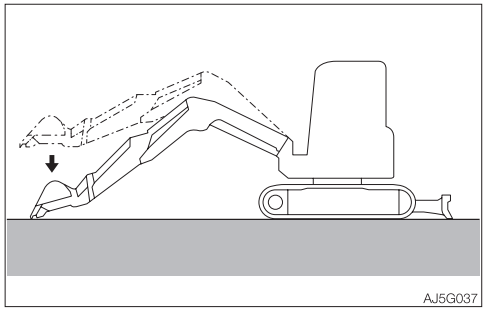

6. Lower the boom until the bucket contacts the ground.
   The machine is normal if the bucket is lowered to the ground. The accumulator (1) is probably faulty if the boom cannot be lowered or stops halfway. Consult a Takeuchi sales or service dealer for help.

Note: When the boom is lowered to lower the bucket to the ground, do it within 10 minutes of stopping the engine.

EVERY 3000 HOURS

INSPECTING THE FUEL INJECTION PUMP

This operation requires experience. Ask your sales or service dealer for it.

INSPECTING THE FUEL INJECTION TIMING

This operation requires experience. Ask your sales or service dealer for it.

EVERY 4000 HOURS

REPLACING THE HYDRAULIC OIL AND CLEANING THE SUCTION STRAINER

⚠ WARNING

- Stop the engine and allow the machine to cool down before performing maintenance.
  - The engine and the hydraulic system and many other parts of the machine are hot immediately after the engine is stopped. Touching these parts will cause burns.
  - The hydraulic oil is also hot and under high pressure immediately after the engine is stopped.
    Be careful when loosening the caps or plugs. Working on the machine under these conditions could result in burns or injuries due to the hot oil spurting out.
- Oil may spurt out if caps or filters are removed or pipes are disconnected before releasing the pressure in the hydraulic system.
  - Press the air breather button to relieve the internal pressure from the tank.
  - When removing plugs or screws, or when disconnecting hoses, stand to the side and loosen them slowly to gradually release the internal pressure before removing.

1. Slew the upperstructure to the position for easy draining.
2. Set the machine to the hydraulic oil level inspection posture.
   Refer to “Inspecting the hydraulic oil tank level and replenishing” on page 5-26.
3. Raise the safety lock lever to the locked position.
4. Open the side cover.

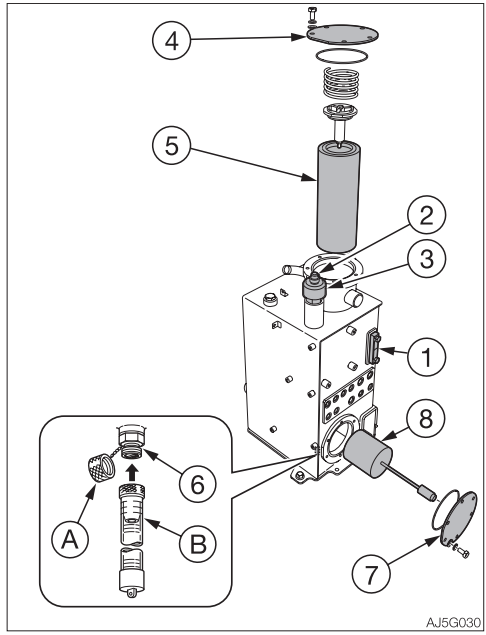

5. Press the button (2) to relieve the internal pressure from the tank.
6. Replace the air breather filter (A).
   Refer to “Replacing the air breather filter” on page 5-58.
7. Remove the air breather (3).

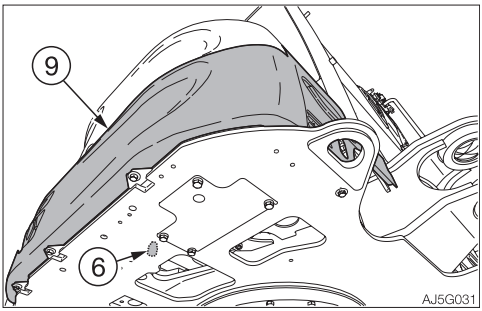

8. Loosen the bolts and remove the cover (9).

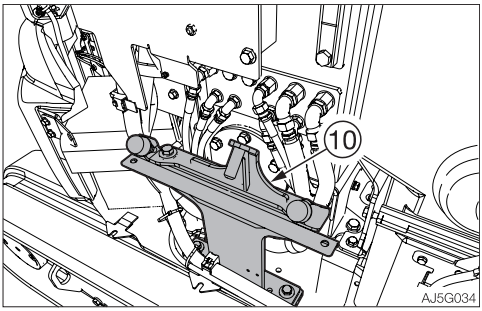

9. Loosen the bolts and remove the catch (10).
10. Place a pan under the plug (6) to catch the waste oil.
11. Remove the drain plug (6), and then drain the hydraulic oil.
12. Loosen the bolts and remove the flange (4).
13. Remove the return filter (5).
14. Loosen the bolts and remove the flange (7).
15. Remove the suction strainer (8) and clean it.
16. Clean the inside of the hydraulic oil tank.
17. Tighten the drain plug (6).
18. Install the suction strainer (8) on the tank and then install the flange (7).
19. Install the cover (9).
20. Install the new return filter (5) and the flange (4) on the tank.
21. Add hydraulic oil from the hole of air breather (3) up to the level between the upper limit (H) and the lower limit (L) in the sight gauge (1).
22. Install the air breather (3).
23. Bleed air from the hydraulic oil circuit following “Bleeding air” below.
24. Set the machine to the hydraulic oil level inspection posture and inspect the oil level after the oil cools.
    Refer to “Inspecting the hydraulic oil tank level and replenishing” on page 5-26.

Bleeding air

IMPORTANT: After replacing the hydraulic oil or hydraulic devices, or after performing maintenance of the hydraulic devices, bleed air from the hydraulic circuits and hydraulic devices. Failure to do so may damage the hydraulic devices.

• Hydraulic pump

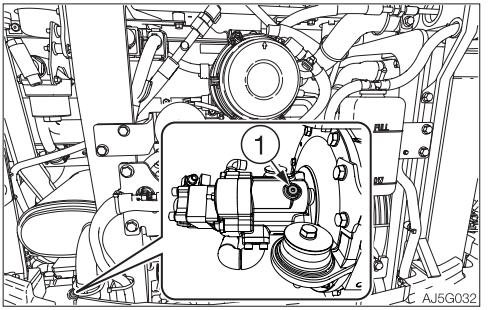

1. Open the engine hood.
2. Loosen the vent plug (1) on the hydraulic pump.
3. Once hydraulic oil overflows from the vent plug hole (1), tighten the vent plug (1).

• Cylinders

1. Start the engine, let it run at a low-idling speed for 10 minutes.
2. Maintain the engine at low idle, and then slowly extend and retract each cylinder 4 or 5 times, without letting them reach the stroke end.
3. While running the engine at high speed, slowly extend and retract each cylinder 4 or 5 times, without letting them reach the stroke end.
4. Return the engine speed to low idle, and then slowly extend and retract each cylinder 4 or 5 times to the stroke end.

- **Emergency shut-off valve (If equipped)**
  This operation is dangerous and requires experience. Ask your sales or service dealer for help.
  If air is not released, the working equipment could become slow in reacting to the operation of the operator and show unexpected behavior.

⚠ WARNING

When removing plugs or screws, or when disconnecting hoses, stand to the side and loosen them slowly to gradually release the internal pressure before removing.

1. Place a pan under the hose (A) or (B) to catch the waste oil.
2. Start the engine and run it at low idle.
3. Fully lower the safety lock lever to the unlock position.

Boom

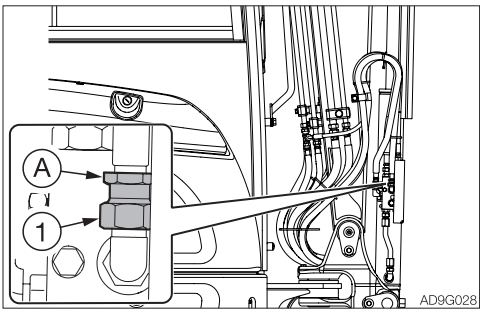

4. Hold the hose fitting (A) in place with a wrench and slowly loosen the hose nut (1).
5. Slowly move the boom in the “Boom lower” direction a little until there are no more air bubbles coming from the hose nut (1) joint.
6. Hold the hose fitting (A) in place with a wrench and tighten the hose nut (1).

Arm

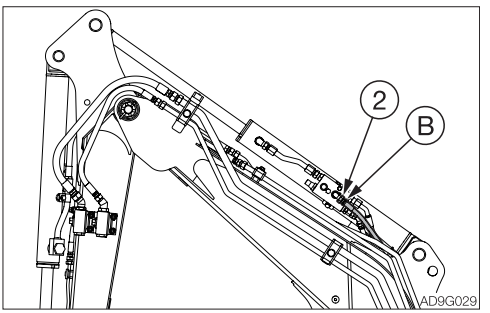

4. Hold the hose fitting (B) in place with a wrench and slowly loosen the hose nut (2).
5. Slowly move the arm in the “Arm lower” direction a little until there are no more air bubbles coming from the hose nut (2) joint.
6. Hold the hose fitting (B) in place with a wrench and tighten the hose nut (2).

WHEN REQUIRED

REPLACING THE BUCKET TEETH AND THE SIDE CUTTERS

Replace the bucket teeth and the side cutters when the tooth points or the side cutters are worn. Do not wait until the adapter or bucket is damaged.

⚠ WARNING

- **Before performing maintenance or repairs under the machine, lower all moveable working equipment to the ground or in the lowermost position.**
- **To prevent unexpected movement, firmly secure the working equipment when repairing or replacing the bucket teeth or side cutter.**
- **When using a hammer, pins may fly out or metal particles may be scattered. This may lead to serious injury.**
  - **If hard metal parts such as pins, bucket teeth, side cutter or bearings are hit with a hammer, wear protective gear such as safety goggles and gloves.**
  - **When hitting pins or bucket teeth, always check that there is no one in the surrounding area.**
- **Do not allow unauthorized personnel in the work area while working.**

• Bucket tooth <V13SY or V17S>
Removal

1. Clean the bucket and park the machine in a flat, safe place where the ground is hard.

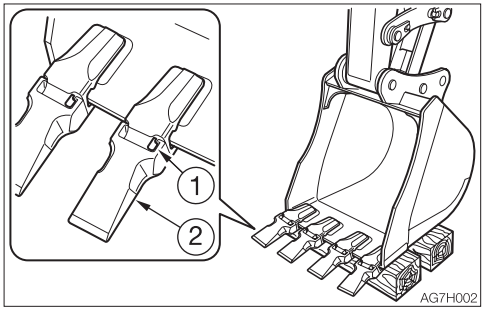

2. Set the bottom surface of the bucket flat and lower it on a block so that the locking pin (1) can be knocked out.
3. Remove the key, then check that the bucket is stable.

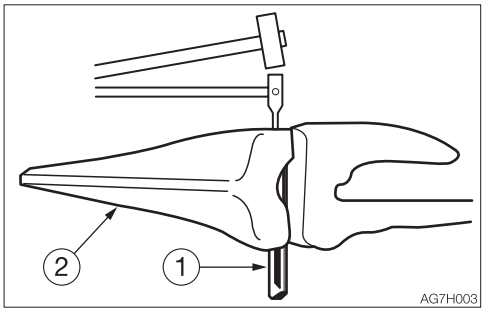

4. Place a rod against the locking pin (1) and knock the locking pin out by hammering against the rod.
   The rod should be round and thinner than the locking pin.

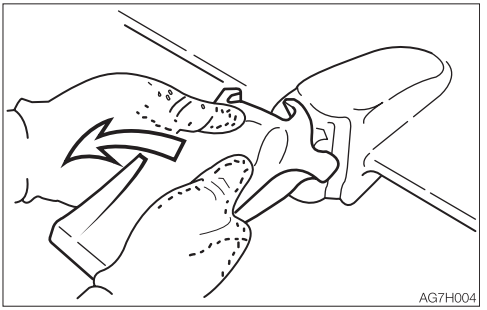

5. Remove the tooth point (2). Some tooth points (2) are of the type that are removed by turning (twisting) them counterclockwise.
   The same procedure can be used to remove the other tooth points.

Installation

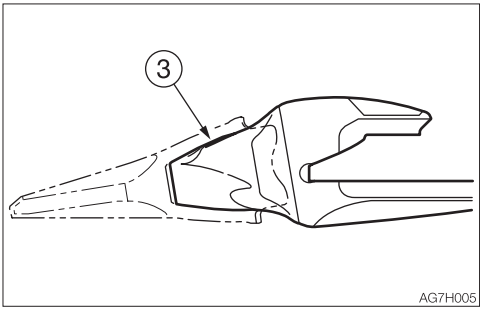

1. Clean the adapter nose (3). If there is gravel or mud on the adapter nose, the tooth point will not go in all the way and the pin cannot be driven in.

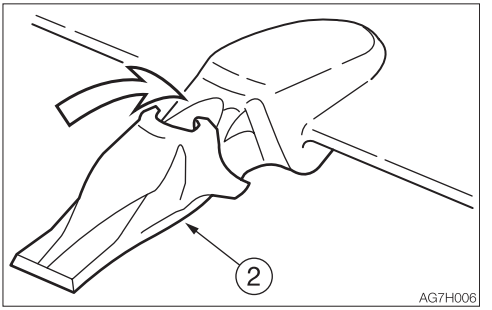

2. Put the tooth point (2) in the adapter nose (3).
   Push in firmly until the tooth point (2) touches the tip of the adapter nose (3). Some tooth points (2) are of the type that are installed by turning (twisting) them clockwise.

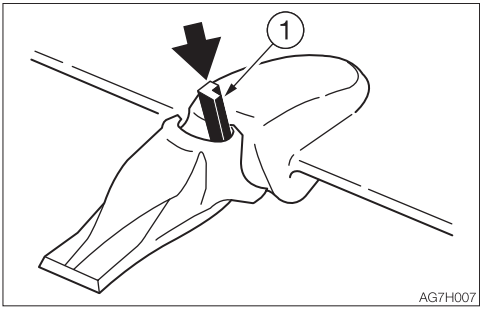

3. Insert the locking pin (1), making sure it is in the right direction.

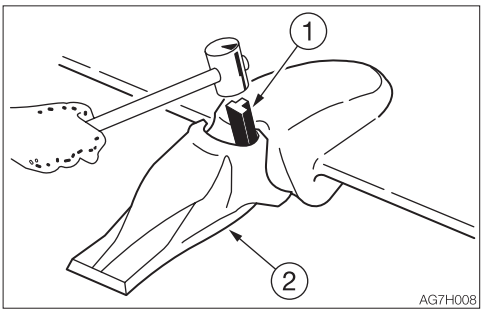

4. Drive in the locking pin (1) with a hammer until it is flush with the tip of the tooth point (2) ear.

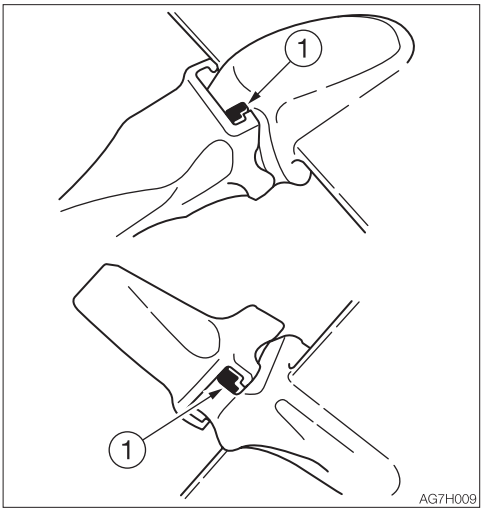

5. The locking pin (1) is now driven in.
   The same procedure can be used to install the other tooth points.

• Side cutter
Installation

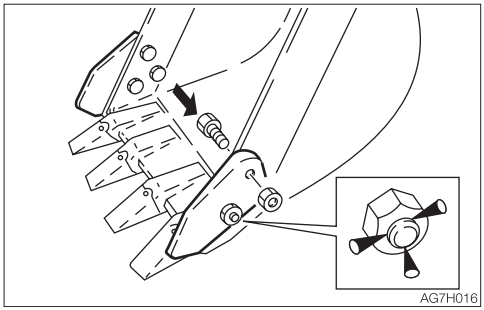

1. Insert the bolts from the inner of the bucket and tighten the side cutterwith nuts.
   Tightening torque: 241 N·m (178 ft-lb)
2. Caulk the bolts with a punch at three spots along the periphery of the screw to prevent the nuts from coming loose.

REPLACING THE BUCKET

⚠ WARNING

- **Before performing maintenance or repairs under the machine, lower all working equipment to the ground or in the lowermost position.**
- **If maintenance must be performed with the engine running, always work as a two person team communicating each other.**
  - **One person must sit in the operator's seat so that he/she can immediately stop the engine when necessary. He/she must take care not to touch the lever or pedal unless necessary.**
  - **The one who performs maintenance must make sure to keep his/her body or clothing away from the moving part of the machine.**
- **When using a hammer, pins may fly out or metal particles may be scattered. This may lead to serious injury.**
  - **If hard metal parts such as pins, bucket teeth, side cutter or bearings are hit with a hammer, wear protective gear such as safety goggles and gloves.**
  - **When hitting pins or bucket teeth, always check that there is no one in the surrounding area.**
- **When aligning the pin holes, always do so by checking them visually. Do not insert your finger in the pin hole, or you could lose your finger.**

Removing

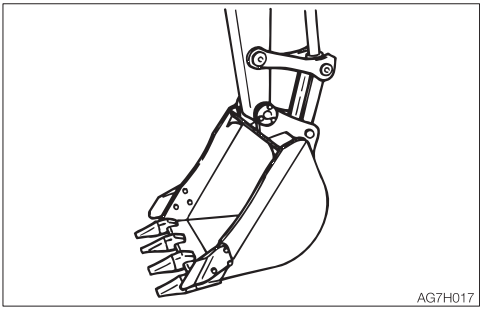

1. Lower the bucket to the ground as shown on the figure above in a stable position.

Note: When removing pins, set the bucket so that it is barely touching the ground. If the bucket is firmly touching the ground, the resistance will be great and it will be difficult to remove the pin.

2. Set the safety lock lever to the locked position and stop the engine.

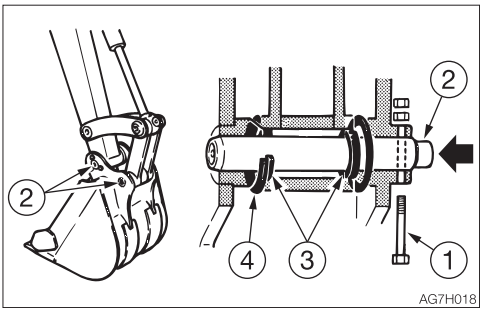

3. Remove the bolt (1).
4. Hammer the pin (2) out of the bucket.
5. Remove the bucket.
   Inspect the pin seal (3) and replace it if it is deformed or damaged. (See next page.)

Installation

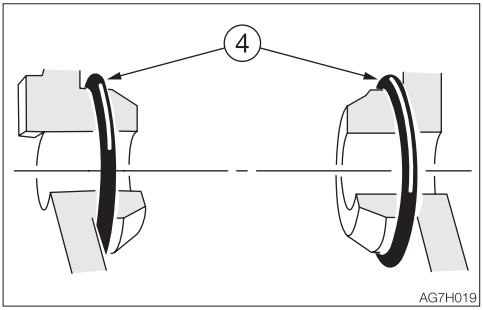

1. Set the O-ring (4) on the bucket as shown on the figure above.

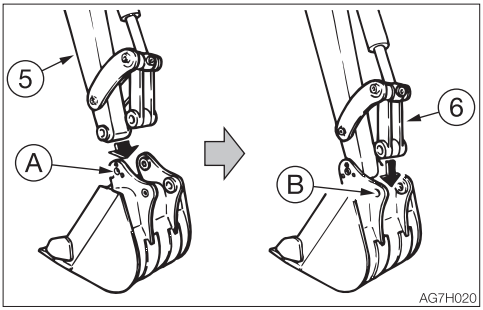

2. Align the pin hole (A) on the bucket with the pin hole on the arm (5), and install the pin (2).
3. Operate the cylinder, align the pin hole (B) on the bucket with the pin hole on the link arm (6), and install the pin (2).

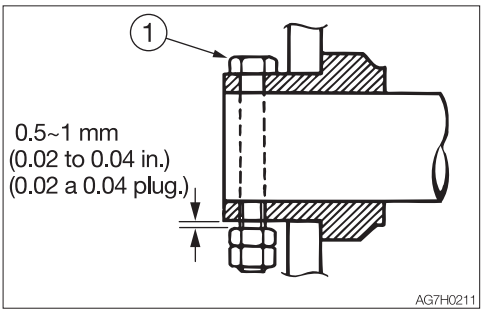

4. Align the turn prevention holes, and then install the bolt (1) and the nut. Be sure to leave a gap of about 0.5 to 1 mm (0.02 to 0.04 in.) between the nut and bucket bush, or the nut will come loose.

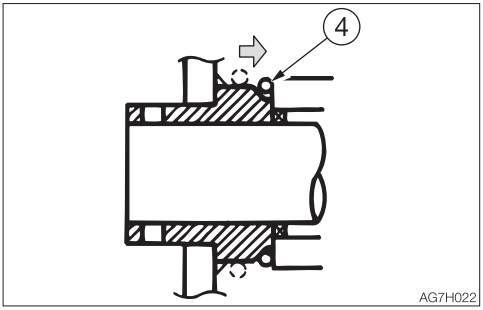

5. Adjust the gap between the bucket and the arm.
   Refer to “Adjusting the gap between the bucket and arm (If equipped)” on page 5-75.
6. Slide the O-ring (4).

Replacing the pin seal

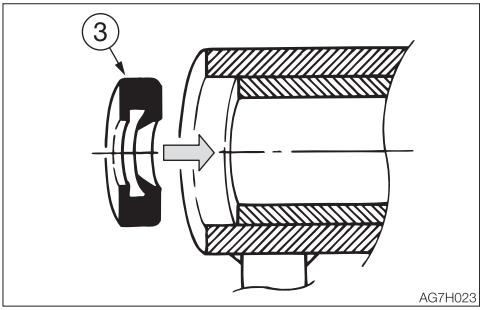

1. Set the pin seal (3) in the direction shown on the figure above.
2. Use a mallet to slowly press the pin seal in. Be careful not to damage the seal.

ADJUSTING THE GAP BETWEEN THE BUCKET AND ARM (IF EQUIPPED)

⚠ WARNING

- **Before performing maintenance or repairs under the machine, lower all working equipment to the ground or in the lowermost position.**
- **To prevent unexpected movement, securely block the working equipment when adjusting the gap.**

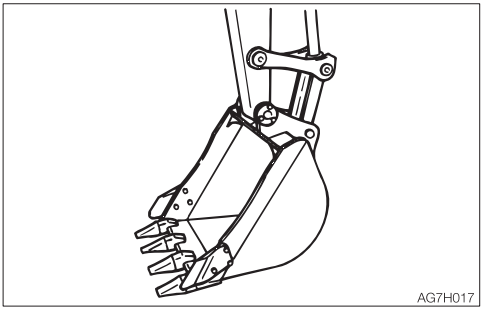

1. Lower the bucket to the ground as shown on the figure above in a stable position.
2. Check that the bucket dose not move, and then set the safety lock lever to the locked position and stop the engine.

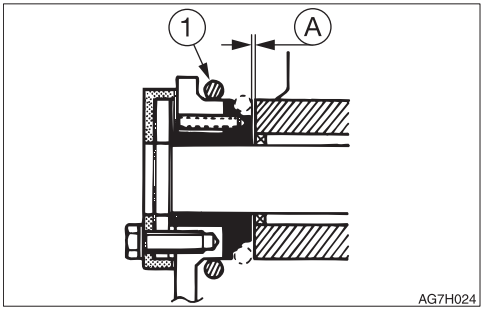

3. Move the O-ring (1) to bring the gap (A) into view and measure the width of the gap (A).
   The gap (A) should be 0.5 mm (0.02 in.).
   Swing the upperstructure slightly to the left and lightly press the arm point to the left side of the bucket (the side without an adjuster).

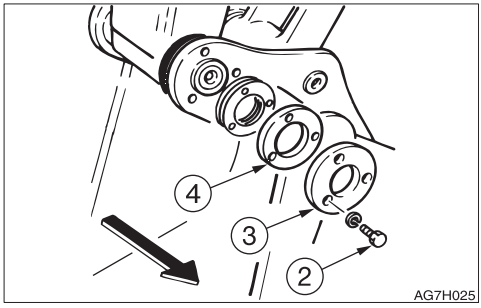

4. Remove the three bolts (2), the end plate (3) and flange (4).

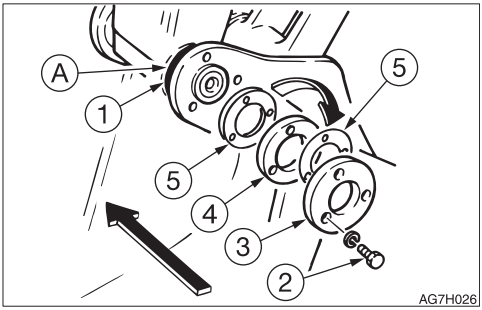

5. Pull out the adjustment shim(s) (5) corresponding to the gap (A) from between the flange (4) and the bucket body.
   Adjustment shim thickness : 0.5 mm (0.02 in.)
   Be careful that the gap is no less than 0.5 mm (0.02 in.) after adjustment.

Note:
Example (for a gap of 2 mm or 0.08 in.):
2 mm - 0.5 mm (standard value)= 1.5 mm (0.06 in.)
In the above example, three shims (5) should be removed.

6. Insert the adjustment shim(s) (5) removed in step 5 above between the end plate (3) and the flange (4), and then fasten it in place with the three bolts (2).
   · Tightening torque for bolts (2): 83 N·m (61.5 ft-lb.)
7. Return the O-ring (1) to the original position.

INSPECTING AND REPLENISHING THE WINDSHIELD WASHER FLUID

⚠ WARNING

Choose ethyl alcohol as washer solution. Do not use methyl alcohol as washer solution. It could damage the eyes.

Use a windshield washer fluid designed specifically for motor vehicles. Follow the instructions included with the washer fluid.

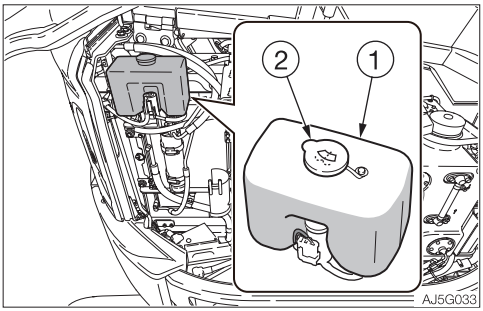

Inspection

1. Open the side cover.
2. Inspect the washer tank (1) and add washer fluid if the level is low.

Replenishing

1. Mix the washer fluid to the prescribed concentration.
2. Remove the cap (2) and add washer fluid. Keep the dust away while replenishing the washer fluid.
3. Install the cap (2).

LUBRICATING THE LEVERS AND PEDALS

⚠ WARNING

Set the machine to the parking posture, stop the engine, remove the starter key and store it. Failure to do so may result in the machine moving abruptly, leading to serious injury or death.

If the levers or pedals no longer move smoothly, grease them.

Operating levers

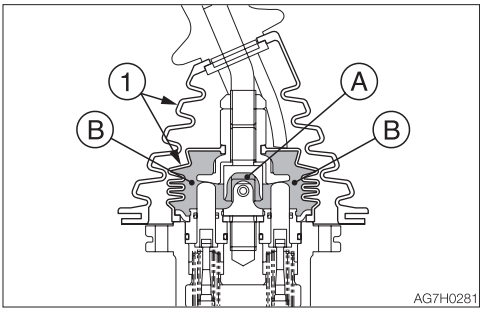

Travel levers/pedals

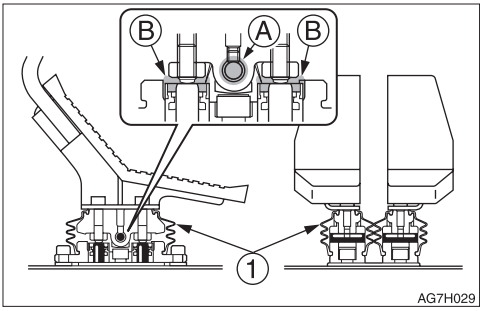

Boom swing pedal

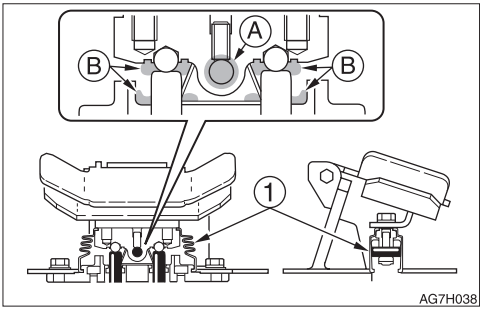

Dozer blade lever

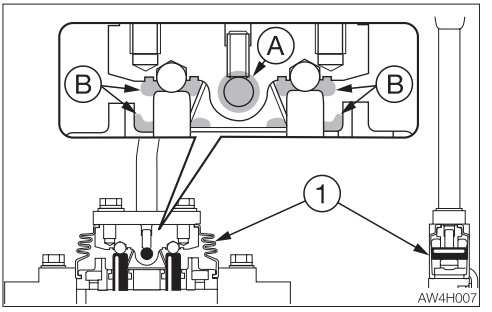

1. Remove the lower mount section of the boot (1) and turn it upward.
2. Wipe off the old grease.
3. Apply grease to points (A) and (B).
4. Set the boot (1) back as it was.