INSPECTING THE RUBBER CRAWLERS

Repair or replace the rubber crawlers if their condition becomes as described below. Consult your sales or service dealer for repair or replacement.

Rubber crawler
Replace the crawler if the entire crawler is stretched and cannot be adjusted.

(1) Lug

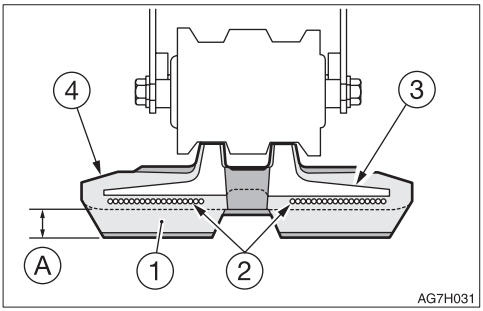

Replace if the height of (A) is 5 mm (0.2 in.) or below.

(2) Steel cord

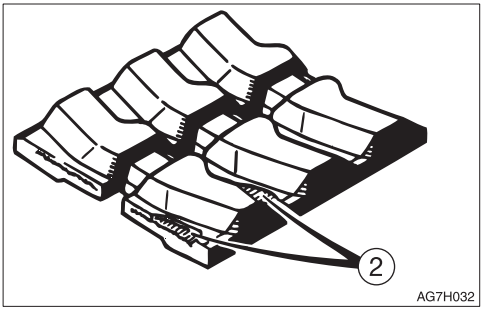

Replace if the steel cord is exposed for two links or more.
Replace if the half or more of the steel cords on one side are cut.

(3) Metal core

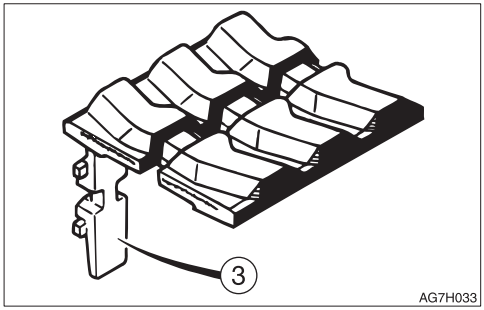

Replace if even one metal core is off.

(4) Rubber

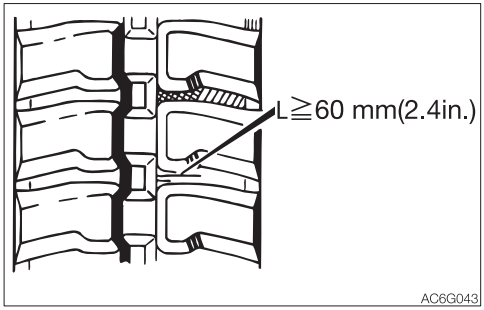

Repair if there are cracks of 60 mm (2.4 in.) or greater in length.
If the steel cord is visible, repair as soon as possible, regardless of the length of the crack.

REPLACING THE RUBBER CRAWLERS

⚠ WARNING

- **If you must work beneath the raised machine or working equipment, always use wood blocks, jack-stands or other rigid and stable supports. Never get under the machine or working equipment if they are not sufficiently supported.**
- **If maintenance must be performed with the engine running, always work as a two person team communicating each other.**
  - **One person must sit in the operator's seat so that he/she can immediately stop the engine when necessary. He/she must take care not to touch the lever or pedal unless necessary.**
  - **The one who performs maintenance must make sure to keep his/her body or clothing away from the moving part of the machine.**

Removal

1. Fully release the tension of the rubber crawler.
   Refer to "Inspecting and adjusting the crawler tension" on page 5-34.

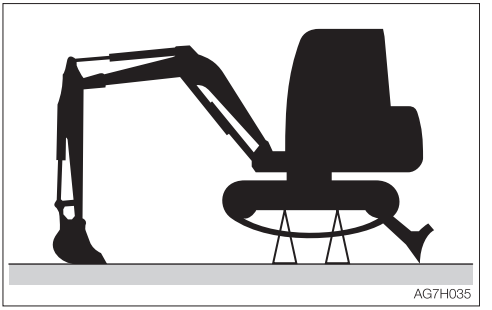

2. Use the working equipment to lift the body.

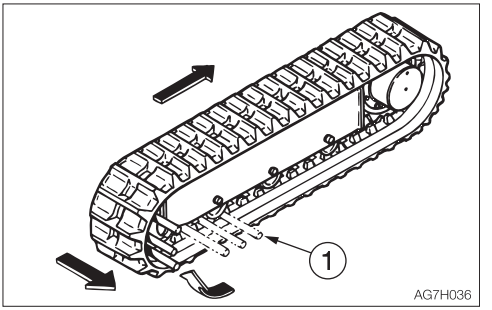

3. Set an iron pipe (1) in the rubber crawler and turn the sprocket slowly in the reverse direction.
4. Turn until the iron pipe (1) is directly next to the idler and the rubber crawler lifts away from the idler, then stop turning the sprocket.
5. Slide the rubber crawler sideways and remove it from the crawler frame.
   Remove the other rubber crawler using the same procedure.

Installation

1. Use the working equipment to lift the body.

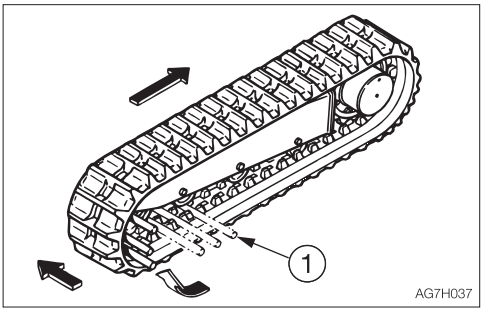

2. Set the rubber crawler on the sprocket.
3. Set an iron pipe (1) in the rubber crawler and turn the sprocket slowly in the reverse direction.
4. Turn until the iron pipe (1) is directly next to the idler and the rubber crawler lifts away from the idler, then stop turning the sprocket.
5. Slide the rubber crawler inward, engage it on the idler, then pull out the iron pipe.
6. Check that the rubber crawler is securely engaged on the sprocket and idler.
7. Tighten the rubber crawler to the standard tension.
   Refer to “Inspecting and adjusting the crawler tension” on page 5-34.
8. Install the other rubber crawler using the same procedure.

EVERY 2 YEARS

REPLACING THE RECEIVER DRYER

This operation requires experience. Ask your sales or service dealer for it.

MAINTENANCE DURING EXTENDED STORAGE PERIOD

Storage procedures

If the machine is to be stored for 30 days or more, store it indoors. If it must be stored outdoors, park the machine on a surface laid with lumber on a flat ground, and place a waterproof cover over it so that it stays dry.

1. Clean the machine.
2. Inspect for oil leakage, water leakage, cracks and loose nuts and bolts.
3. Add fuel and replace the hydraulic oil and oil.
4. To prevent rusting and freezing, replace the engine coolant with long-life coolant (LLC).
   Refer to “Cleaning the engine cooling system” on page 5-60.
5. Use the grease gun to lubricate the grease fittings.
6. Fully retract the bucket and arm cylinders and lower the bucket and dozer blade to the ground.
7. Apply rust-inhibiting oil to the hydraulic cylinder rods.
8. Disconnect the negative cable from the battery and cover the battery to prevent freezing.

During storage

⚠ WARNING

- **Do not operate the machine in an enclosed area without adequate ventilation.**
- **If natural ventilation is not possible, install ventilators, fans, exhaust extension pipes or other venting devices.**

1. To prevent rusting, operate the machine once a month so that the oil can be circulated throughout the system.
2. Inspect the battery and recharge it as necessary.
   Ask your sales or service dealer for recharging.

Starting the machine after storage

IMPORTANT: If the above “Storage procedures” have not been followed during the extended storage periods, consult your sales or service dealer before starting the machine again.

1. Wipe off the rust-inhibiting oil that was applied on the piston rods of the hydraulic oil cylinders.
2. Add oil or grease as necessary.

Returning the engine to service

1. Perform the daily checks.
2. The engine should be pre-oiled before startup.
   a. Crank the engine, leaving the fuel system shut off so the engine will not start, for 15 seconds.
   b. Then pause for 30 seconds.
   c. Repeat the procedure until you have cranked the engine for a total of one minute. This will circulate the oil in the engine's lubrication system.
3. Prime the fuel system.
4. Start the engine. Allow the engine to idle for approximately 15 minutes while you check for:
   · Proper oil pressure
   · Fuel, engine oil or coolant leaks
   · Proper operation of the indicators and/or gauges
5. Avoid prolonged operation at minimum or maximum engine speeds and loads for the remainder of the first hour of operation.

TROUBLESHOOTING



SYMPTOMS THAT ARE NOT MALFUNCTIONS

The symptoms listed below are not malfunctions.

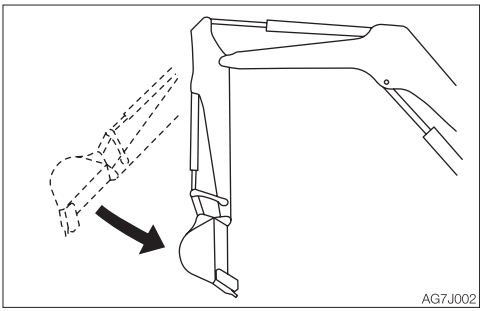

- The arm retracting speed momentarily slows down when it reaches an almost vertical position while the engine is running at low speed.

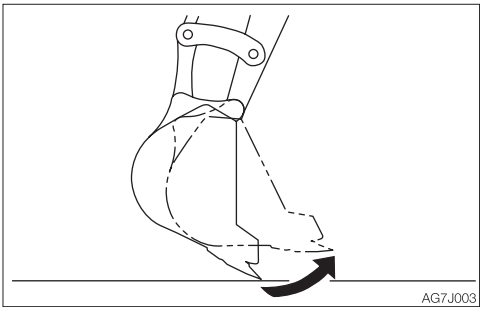

- The bucket teeth moving speed momentarily slows down when it reaches an almost horizontal position while the engine is running at low speed.
- The slew motor produces noise at the beginning and end of the slewing.
- The travel motor produces noise when stopped suddenly from its high speed traveling.
- The control valve produces noise if excessive force is applied to the working equipment or when it moved to the stroke end.
- It becomes less easy to operate the machine when an attachment weighing more than a standard arm or bucket is installed.

IF THE ENGINE OVERHEATS

⚠ WARNING

- **Do not open the engine hood when steam is coming from it. The steam or hot water may spurt out and cause burns.**
- **Do not try to remove the radiator cap or the drain plug when the cooling water is hot. Stop the engine, wait until the engine and the radiator cool, and then slowly loosen the radiator cap to release the internal pressure.**
- **Before performing maintenance, stop the engine and allow the machine to cool down.**

The symptoms listed below indicate overheating.

<Canopy>

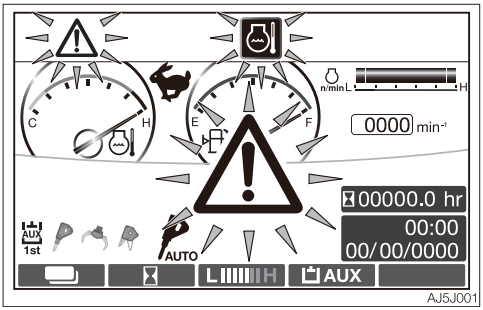

<Cab>

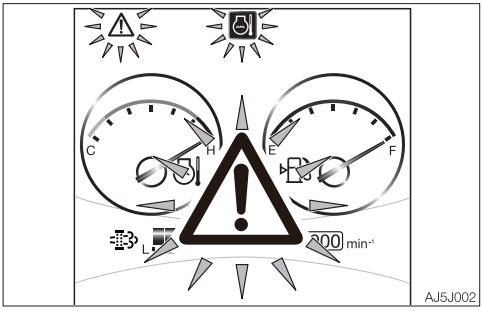

- An alarm is sounded and the engine emergency lamp and the coolant temperature warning lamp start flashing.
- The water temperature gauge level is in the red zone.
- Steam comes from the engine room.

Remedy procedure

1. Park the machine in a safe place.
2. Check if steam is coming out of the closed engine hood.
3. If there is steam, stop the engine immediately and contact your sales or service dealer for repair. If steam, is not coming out run the engine at low idle and let the water temperature cool down.
4. When the water temperature gauge level drops in the green zone, stop the engine.
5. Perform the inspections and the remedies listed below once the engine cools down.
   - Fan belt slack..... Adjust
     Refer to page 5-30.
   - Coolant level ..... Add
     Refer to page 5-22.
   - Water leakage..... Repair
   - Radiator fins..... Clean
     Refer to page 5-46.
   - Sediment in cooling system
     ..... Clean
     Refer to page 5-60.

If the problem persists after the above remedies, contact your sales or service dealer for repair.

IF THE BATTERY GOES DEAD

The symptoms below indicate that the battery is dead.
- The starter motor does not turn or fails to start the engine.
- The horn is too weak.

Remedy procedure
Start the engine using the booster battery on the other vehicle (booster vehicle) and the jumper cables.

⚠ WARNING

- **When starting the engine using the jumper cables, be sure to connect the cables by following the proper steps. Improper use of jumper cables can result in battery explosion or unexpected machine motion.**
  - **Do not allow the booster vehicle and the machine with a dead battery (dead machine) to touch each other.**
  - **Do not allow the positive (+) and the negative (–) clips of the jumper cables to touch each other.**
  - **When connecting, attach the jumper cable to the positive (+) terminals first. When disconnecting, remove the cable from the negative (–) terminal (ground) first.**
  - **Connect the last clip of the jumper cable to a point as far away from the battery as possible.**
- **Always wear the protective goggle when jump starting the engine by using the jumper cables.**
- **Set the battery charging current to at or below one tenth of the rated capacity. Overcharging could cause the battery to leak or be depleted, resulting in explosion if ignited.**

IMPORTANT: Use the jumper cables and clips of a size suited to the capacity of battery. Do not use damaged or corroded jumper cables and clips.
IMPORTANT: Be sure that the battery of the booster vehicle has the same capacity as the battery of the dead machine.
IMPORTANT: Be sure to connect the clips securely.

Connecting the jumper cables

IMPORTANT: Set the starter keys of the booster vehicle and the dead machine to the OFF position.

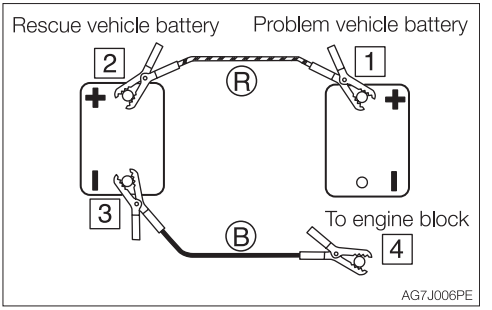

1. Connect the clip of jumper cable (R) to the positive (+) battery terminal of the dead machine.
2. Connect the other clip of jumper cable (R) to the positive (+) battery terminal of the booster vehicle.
3. Connect the clip of jumper cable (B) to the negative (–) battery terminal of the booster vehicle.
4. Connect the other clip of jumper cable (B) to the engine block of the dead machine. Connect the clip to a place as far from the battery as possible.

Starting the engine

1. Check that the clips are securely connected to the terminals.
2. Start the engine of the booster vehicle and run it at high speed.
3. Start the engine of the dead machine.

Disconnecting the jumper cables

Once the dead machine is successfully running, remove the jumper cables by following the same steps as for connection in the reverse order.

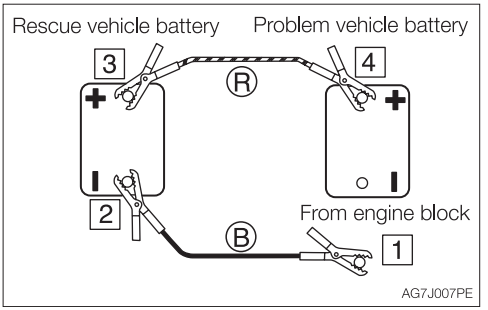

1. Disconnect the clip of jumper cable (B) from the engine block of the dead machine.
2. Disconnect the other clip of jumper cable (B) from the negative (–) battery terminal of the booster vehicle.
3. Disconnect the clip of jumper cable (R) from the positive (+) battery terminal of the booster vehicle.
4. Disconnect the clip of jumper cable (R) from the positive (+) battery terminal of the dead machine.

Recharging

Ask your sales or service dealer for recharging the dead battery.

IF A FUSE BLOWS

If a light does not come on or the electrical system does not work, a fuse may be blown. Inspect the fuses.

INSPECTING AND REPLACING THE FUSE

⚠ WARNING

If the fuse blows again soon after replacement, then the electric system is likely faulty. It may pose a fire hazard if not properly repaired. Contact your sales or service dealer for advice.

1. Turn the starter key to the OFF position to stop the engine.
2. Open the side cover.

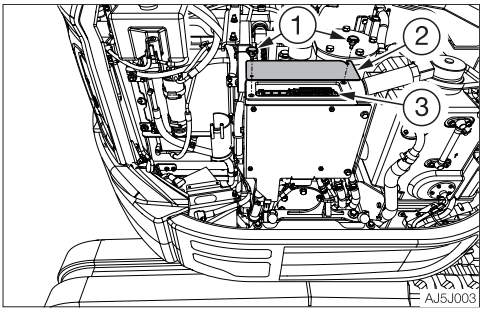

3. Release the lock by turning the knobs (1) counterclockwise.
4. Remove the cover (2).
5. Check for any blown fuses (3).

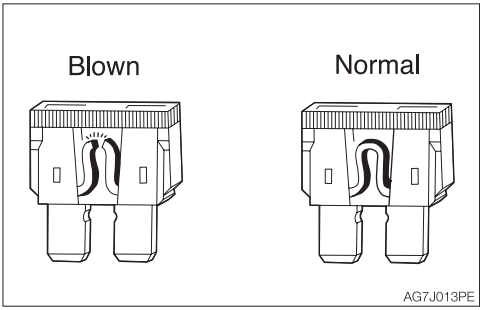

6. If a fuse is blown, replace it with a spare fuse of the same capacity.

Fuse layout and circuits protected

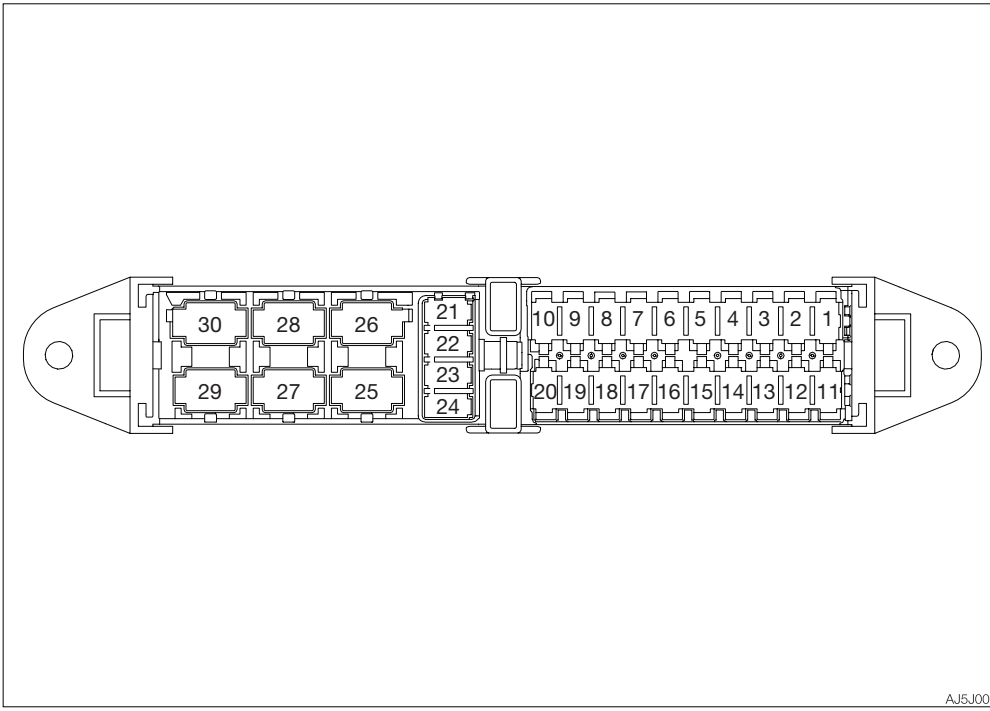

No.	Capacity	Symbol	Protected circuit	Fuse No.
1	10A		Horn	F1
2	10A		Starter switch	F2
3	10A	ECU	ECU	F3
4	25A	CTL	Controller power supply	F4
5	15A		Lights	F5
6	15A		Fuel supply pump	F6
7	3A		GPS (B)	F7
8	—	—	—	F8
9	3A		GPS (ACC)	F9
10	10A	MAIN CTL	Main controller power supply	F10
11	15A	R	Rear light	F11
12	10A		Beacon	F12
13	15A		Wiper	F13
14	15A	OPT	Option	F14
15	10A		Display	F15
16	10A	ECU	ECU	F16
17	15A		Safety lock lever	F17
18	10A	SOL (1)	Solenoid (1)	F18
19	10A	SOL (2)	Solenoid (2)	F19
20	15A		Immobilizer	F20

No.	Capacity	Symbol	Protected circuit	Fuse No.
21	15A	OPT	Option	F21
22	15A		Air conditioner compressor	F22
23	—	—	—	F23
24	30A		Blower motor	F24
25	50A	S.B.F.1	Fusible link (1)	—
26	40A	S.B.F.2	Fusible link (2)	—
27	40A	S.B.F.3	Fusible link (3)	—
28	40A	S.B.F.4	Fusible link (4)	—
29	40A	S.B.F.5	Fusible link (5)	—
30	25A	S.B.F.6	Fusible link (6)	—

INSPECTING THE FUSIBLE LINK

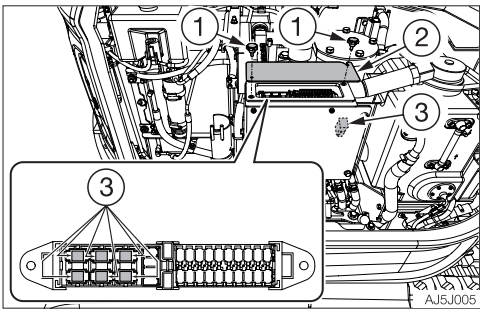

If the machine is not turned on after turning the starter switch to the ON position, the cartridge type fusible link (3) is likely blown. Open the right side cover and inspect it. If the fusible link is blown, contact your sales or service dealer.

1. Open the side cover.
2. Release the lock by turning the knobs (1) counterclockwise.
3. Remove the cover (2).
4. Inspect the fusible link (3).

Note: Fusible links are large type fuses used in high current applications. Like a regular fuse, they act as fuses by protecting the electric components and wirings from damage caused by excessive current draw.

RESTARTING AFTER ADDING FUEL

BLEEDING AIR FROM THE FUEL SYSTEM

IMPORTANT: NEVER use the starter motor to crank the engine in order to prime the fuel system. This may cause the starter motor to overheat and damage the coils, pinion gear and/or ring gear.
IMPORTANT: If the engine stalls due to fuel shortage, add fuel, turn the key to the ON position for 60 seconds, and then turn it to the START position. Running the starter for a long time before there is enough fuel is going through can cause the starter to fail.

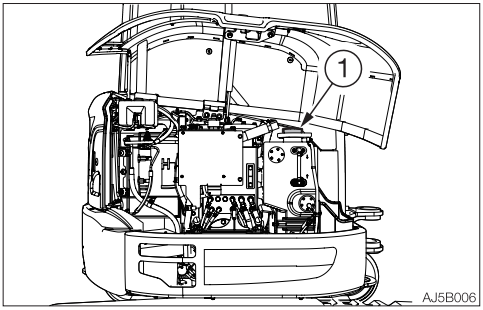

1. Open the side cover.
2. Add fuel.

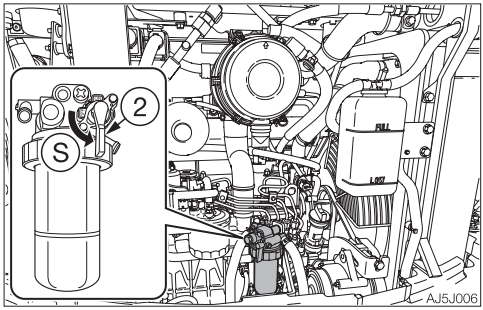

(S): Close
3. Open the valve (2) of the water separator.

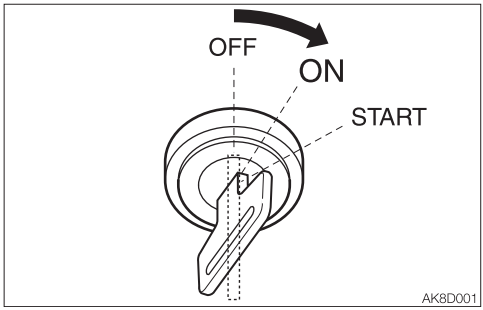

4. Turn the starter key to the ON position and hold it for about 60 seconds.
   The automatic air bleeder bleeds air from the fuel system.

Note: Air in the fuel system causes the engine to fail to start or to have other problems. Always bleed air when the fuel tank is emptied or when there is air in the fuel system.

IF A WARNING LAMP FLASHES

If an alarm is sounded or a warning lamp starts flashing during operation, park the machine in a safe place and perform the remedy procedures described below.

Warning lamp	Lamp name	Causes and remedies
 AW4J007	**Vehicle and engine emergency lamp**	There is a problem in the machine. Refer to the respective warning lamp below. Get the vehicle or engine error code number from the multi-informaion display and consult your sales or service dealer referring to the “Vehicle error code list” or “Engine error code list”. Refer to “Multi-information display” on pages 2-17 to 2-75. Refer to “Vehicle error code list” on pages 6-14 and 6-15. Refer to “Engine error code list” on page 6-16.
 AW4J0041	**ECM error warning lamp**	An engine problem is detected. If an error code is displayed on the multi-information display, inform your sales or service dealer of the code and ask for help. Refer to “Multi-information display” on pages 2-17 to 2-75. Refer to “Engine error code list” on page 6-16.
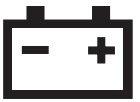 AG7J019	**Battery charge warning lamp**	There is a problem with the fan belt or charger. Check the fan belt for slack or breakage and adjust as necessary. If the lamp continues flashing after maintenance, there is likely a problem with the charger. Consult your sales or service dealer for help. Refer to “Inspecting and adjusting the fan belt” on page 5-30.
 AG7J017	**Engine oil pressure warning lamp**	There is a problem in the engine lubrication system. Check the engine oil level. If the lamp is flashing when the level is normal or even after replenishment of oil or coolant, consult your sales or service dealer. Refer to “Inspecting and replenishing the engine oil” on page 5-23.

Warning lamp	Lamp name	Causes and remedies
 AG7J018	**Coolant temperature warning lamp**	The coolant temperature is too high and the engine is overheating. Refer to “If the engine overheats” on page 6-3.
 AG7J020	**Air cleaner warning lamp**	The air cleaner is clogged. Clean it. Refer to “Cleaning the air cleaner” on page 5-40.
 AW4J010	**Fuel level warning lamp**	The fuel level is too low. Add fuel. Refer to “Inspecting the fuel level” on page 5-25.
 AQ0J004	**Third auxiliary hydraulic warning lamp**	Pressure in the third auxiliary hydraulic line is too low Consult your sales or service dealer for help.
 AM1J005	**Lift overload warning indicator lamp**	This lamp starts flashing if the overload warning device is activated. If it occurs, reduce the load to be lifted. Refer to “Lift overload warning switch” on page 2-84.

VEHICLE ERROR CODE LIST

If an error code appears on the display, consult your sales or service dealer.

Error code	Error details
9	Impossible to sense ACC key
402	CAN 0 communication error
502	CAN communication error (ECM)
602	CAN communication error (cluster gauge)
812	CAN communication error (switch assy)
822	CAN communication error (Takeuchi Security System)
832	CAN communication error (jog dial)
842	CAN communication error (radio)
1703	Main power supply voltage error (too high)
1704	Main power supply voltage error (too low)
2503	Sensor voltage error (too high) MC
2504	Sensor voltage error (too low) MC
2583	MC1 sensor 2 voltage error (too high)
2584	MC1 sensor 2 voltage error (too low)
3300	Alternator charge faulty
3401	Engine oil pressure error
3500	Overheat
3600	Air cleaner clogged
3700	Water separator alarm
5363	Air conditioner servo sensor error (too high)
5364	Air conditioner servo sensor error (too low)
5503	Fuel sender voltage error (too high)
5504	Fuel sender voltage error (too low)
5603	Lift alarm sensor error (short circuit)
5604	Lift alarm sensor error (cable break)

Error code	Error details
5813	Pressure sensor P1 error (short circuit)
5814	Pressure sensor P1 error (cable break)
5823	Pressure sensor P2 error (short circuit)
5824	Pressure sensor P2 error (cable break)
5833	Pressure sensor P3 error (short circuit)
5834	Pressure sensor P3 error (cable break)
6503	AUX1 slide switch voltage value error (too high)
6504	AUX1 slide switch voltage value error (too low)
6509	AUX1 slide switch neutral error
6519	AUX1 (L) switch error
6529	AUX1 (R) switch error
6603	AUX2 slide switch voltage value error (too high)
6604	AUX2 slide switch voltage value error (too low)
6609	AUX2 slide switch neutral error
6709	AUX3 switch error (foot + grip)
6719	AUX3 switch error (Foot)
8005	Pump PWM output electric current error (too low)
8015	AUX1 (L) PWM output electric current error (too low)
8025	AUX1 (R) PWM output electric current error (too low)
8035	AUX2 (L) PWM output electric current error (too low)
8045	AUX2 (R) PWM output electric current error (too low)
8774	Air conditioner servo motor 1 current error
8784	Air conditioner servo motor 2 current error
9900	Options settings change (TFM)
9990	Model change
9991	Unknown models

PWM = Pulse width modulation

ENGINE ERROR CODE LIST

If an error code appears on the display, consult your sales or service dealer.

Error code		Error details
SPN	FMI	
100	1	Oil pressure error
110	0	Engine overheat
	3	Water temperature sensor: High
	4	Water temperature sensor: Low
158	3	Battery voltage: High
190	0	Engine overrun
3509	4	Sensor supply voltage 1: Low
523771	2	Actuator Abnormal
523772	2	Engine Speed Sensor Abnormal
523737	2	Alternator L terminal abnormal
523738	2	Charging failure
523740	2	Speed sensor pulse Abnormal
523774	2	CAN Communication Abnormal
—	—	Emergency Stop
523749	13	+B Line Abnormal

MEMO

OTHER SYMPTOMS

For symptoms not included in the table below or if the problem persists after the proper remedies have been taken, consult your sales or service dealer.

Symptoms	Major causes	Remedies
Left and right operating levers do not move smoothly	• Insufficient grease on the left and right operating levers	• Grease the levers. Refer to page 5-78.
Travel levers, blade lever and pedals do not move smoothly	• Insufficient grease on travel levers, blade lever and pedals	• Grease the levers and pedals. Refer to page 5-78.
Operation of hoe attachment, dozer blade, auxiliary hydraulics, slewing or traveling is not possible.	• Safety lock lever is raised (locked)	• Lower (release) the safety lock lever. Refer to page 2-86.
	• Fuse is blown	• Replace the fuse. Refer to page 6-6.
Digging force is insufficient	• Hydraulic oil level too low	• Add to the specified level. Refer to page 5-26.
	• Hydraulic oil is not warm enough	• Perform the warm-up. Refer to pages 3-14 to 3-16.
	• Air cleaner is clogged	• Clean the air cleaner. Refer to page 5-40.
	• Hydraulic oil is not of suitable type	• Replace the hydraulic oil. Refer to page 5-65.
Traveling is not possible or not smooth	• Stones or foreign objects are stuck	• Remove the foreign object.
Machine veers to the right/left	• Stones or foreign objects are stuck	• Remove the foreign object.
	• Crawler belt tension is faulty.	• Check and adjust (ask your sales or service dealer). Refer to pages 5-34 to 5-35.

Symptoms	Major causes	Remedies
Travel speed cannot be changed	• Fuse is blown	• Replace the fuse. Refer to page 6-6.
Slewing is not possible or not smooth	• Insufficient grease on slew bearing	• Grease the bearing. Refer to page 5-36.
Hydraulic oil temperature is too high	• Hydraulic oil level too low	• Add up to the specified level. Refer to page 5-26.
Starter motor turns but engine does not start	• Insufficient fuel	• Add fuel. Refer to page 5-25.
	• Air in fuel system	• Bleed air. Refer to page 6-11.
	• Water in fuel system	• Drain water. Refer to page 5-37.
	• Fuel is frozen.	• Warm the fuel pipe with hot water or wait until the ambient temperature becomes high.
	• Engine control system is faulty.	• Adjust or repair (ask your sales or service dealer).
	• Fuel line is faulty.	• Adjust or repair (ask your sales or service dealer).
	• Preheating device is faulty.	• Adjust or repair (ask your sales or service dealer).
Crawlers come off	• Crawlers too loose	• Check and adjust (ask your sales or service dealer). Refer to pages 5-34 to 5-35.

Symptoms	Major causes	Remedies
Engine exhaust is white or bluish	• Excessive engine oil	• Adjust to the specified level. Refer to page 5-23.
	• Insufficient engine warm-up.	• Perform the warm-up operation. Refer to page 3-8.
	• Engine control system is faulty.	• Adjust or repair (ask your sales or service dealer).
	• Fuel line is faulty.	• Adjust or repair (ask your sales or service dealer).
	• Prolonged idling (approx. two hours or more)	• Increase the engine RPM and check for smoke.
	• Poor fuel	• Replace the fuel.
Engine exhaust is occasionally black	• Air cleaner is clogged	• Clean the air cleaner. Refer to page 5-40.
	• Engine control system is faulty.	• Adjust or repair (ask your sales or service dealer).
	• Fuel line is faulty.	• Adjust or repair (ask your sales or service dealer).
	• Clogging in the exhaust line.	• Adjust or repair (ask your sales or service dealer).
Irregular noise is produced from the engine (combustion or mechanical noise)	• Low quality fuel is being used	• Replace the fuel.
	• Engine is overheating	• Refer to “If the engine overheats” on page 6-3.
	• Damage inside the muffler	• Replace the muffler. For replacement, ask your sales or service dealer.

MEMO

LOWERING THE BOOM TO THE GROUND

If the hoe attachment must be lowered to the ground while the engine is stopped, use the following procedure.

PROCEDURE 1 (MACHINES WITH AN ACCUMULATOR)
Perform this operation within 10 minutes after the engine stopping.
1. Sit at the operator's seat.
2. Turn the starter switch to the ON position.
3. Lower the safety lock lever to the unlock position
4. Slowly push the operating lever forward to lower the boom.

PROCEDURE 2 (MACHINES WITHOUT AN ACCUMULATOR)
This operation is dangerous and requires experience. Ask your sales or service dealer for it.

⚠ WARNING

- **Stop the engine and allow the machine to cool down before performing maintenance.**
  - **The engine and the hydraulic system and many other parts of the machine are hot immediately after the engine is stopped. Touching these parts will cause burns.**
  - **The hydraulic oil is also hot and under high pressure immediately after the engine is stopped. Be careful when loosening the caps or plugs. Working on the machine under these conditions could result in burns or injuries due to the hot oil spurting out.**
- **Keep away from the working area when the hoe attachment is lowered. You may be hit by dirt falling out of the bucket or the hoe attachment as it drops.**
- **Slowly turn the hose nut and lower the boom at a slow pace.**
- **Do not loosen or remove the hoses not located in the specified places. Oil may spurt out if wrongly handled.**

Equipped with emergency shut-off valve

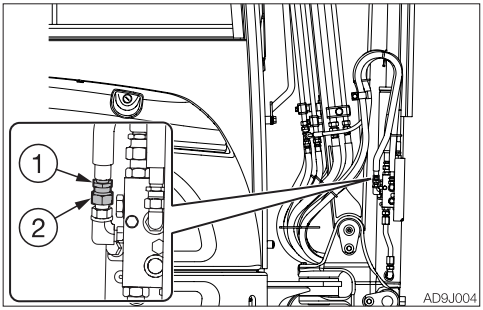

1. Place a pan under the hose to catch the waste oil.
2. Hold the hose fitting (1) with a wrench and slowly loosen the hose nut (2) with another wrench.
3. The oil in the boom cylinder is drained and the hoe attachment is lowered.
4. After the hoe attachment is lowered to the ground, check the safety and stability of the machine.
5. Hold the hose fitting (1) with a wrench and tighten the hose nut (2) with another wrench.

Without emergency shut-off valve

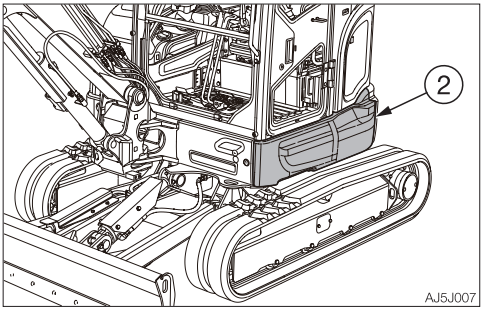

1. Loosen the bolts and remove the cover (2).

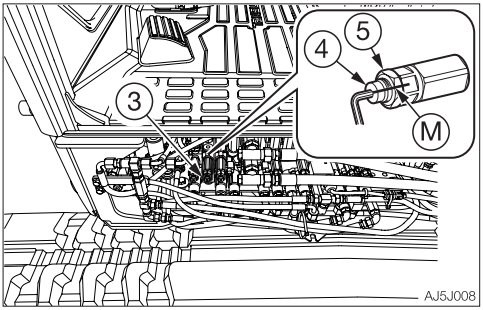

2. Put marks (M) on the plug of the port relief valve (3) and set screw (4).
3. Hold the set screw (4) with a hexagonal wrench so that it does not turn together with the lock nut (5), and then loosen the lock nut (5).
4. Turn the set screw (4) slowly a half turn to lower the boom.
5. Check the safety and stability of the machine.
6. Turn the set screw (4) back to its original position.
7. Hold the set screw (4) with a hexagonal wrench so that it does not turn together with the lock nut (5), and then tighten the lock nut (5).
8. Install the cover (2).

TOWING

⚠ WARNING

When towing, serious injury or death could result, if performed incorrectly or the wire rope being used is inappropriate or not properly inspected.

- **It becomes dangerous if the wire rope breaks or becomes disengaged. Use a wire rope appropriate for the required tractive force.**
- **Do not use a wire rope that is kinked, twisted or otherwise damaged.**
- **Do not apply heavy loads abruptly to the wire rope.**
- **Wear safety gloves when handling the wire rope.**
- **Make sure there is an operator on the machine being towed as well as on the machine that is towing.**
- **Never tow on slopes.**
- **Do not let anyone come near to the wire rope while towing.**

IMPORTANT: Do not tow a machine if its engine does not start or if the machine does not run. Doing so could damage the machine being towed.
When recovering a machine from soft terrain such as mud, hoist the machine or contact your sales or service dealer.
IMPORTANT: Be sure to follow the steps below closely when using the towing hole to tow. Failure to heed even one of the steps may cause damage to the towing hole or other parts of the frame.

Towing the machine (when the engine is started, the travel motor runs)
Use the procedure described below to tow heavy objects or the machine itself if it should get stuck in the mud and not be able to get out on its own.

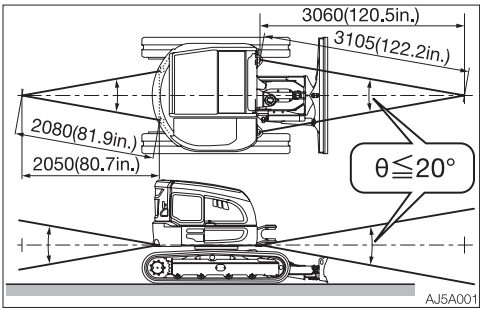

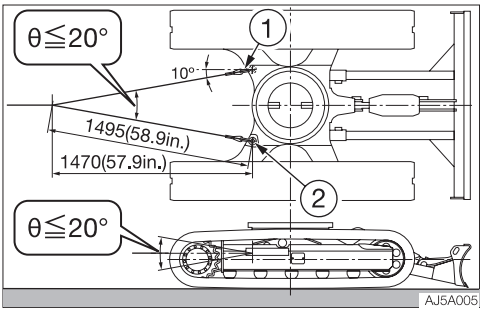

- Permissible forces: 62.8 kN (14117 lbf)
  Do not tow using only a towing hole on one side.

1. Attach the wire rope to the shackle (1).
2. Fasten the shackle (1) to the towing holes (2).
3. Make sure that the wire rope is at a cone angle of 20° or less to the travel frame.
4. Move the machine to tension the wire rope.
5. Move the machine at a low speed of 2 km/h (1.24 mph) or less to a place (convenient location for repair) a short distance from the site.

IF THE CAB OR CANOPY IS DAMAGED

⚠ WARNING

Immediately replace the damaged cab or canopy. Serious injury or death may occur if the machine is operated with damaged cab/canopy.
Do not operate the machine until the replacement is complete. Do not try to repair the damaged cab or canopy by welding. Doing so could endanger the safety of the cab/canopy.

Canopy part number: 03784-00108
Cab part number: 03786-00116

SPECIFICATIONS



BASIC SPECIFICATIONS

Type				Canopy	Cab
MASS					
Operating mass	kg (lb)	Rubber crawlers	Standard arm	3605 (7950)	3760 (8290)
			Long arm	3615 (7970)	3770 (8310)
		Steel crawlers	Standard arm	3705 (8170)	3860 (8510)
			Long arm	3720 (8200)	3870 (8530)
PERFORMANCE					
Bucket capacity (Standard bucket)	m^3 (cu. ft.)	Heaped		0.105 (3.71)	
		Struck		0.078 (2.75)	
Slew speed	min^{-1} (rpm)			9.0 (9.0)** 8.1 (8.1)***	
Travel speed	km/h (mph)	Rubber crawlers	1st	3.0 (1.9)	
			2nd	4.1 (2.5)	
		Steel crawlers	1st	2.8 (1.7)	
			2nd	3.7 (2.3)	
Gradeability	(degrees)			25	
Gradeability (instantaneous*)	(degrees)			30	
Ground pressure	kPa (psi)	Rubber crawlers	Standard arm	30.8 (4.47)	32.1 (4.66)
			Long arm	30.9 (4.48)	32.2 (4.67)
		Steel crawlers	Standard arm	31.7 (4.6)	33.0 (4.79)
			Long arm	31.8 (4.61)	33.1 (4.8)

*: Max. 10 min. per hour
**: Applicable machine models 135300008 to 135302234
***: Applicable machine models 135302235 or later

Type			Canopy	Cab
ENGINE				
Manufacturer and model			KUBOTA V1505-E4B	
Rated output	Net (ISO 14396)	kW/min^{-1} (hp/rpm)	18.2/2300 (24.4/2300) 17.1/2300 (22.9/2300)***	
	Net (ISO 9249/ SAE J1349)	kW/min^{-1} (hp/rpm)	17.6/2300 (23.6/2300) 16.5/2300 (22.1/2300)***	
Displacement		ml (cu.in.)	1498 (91.4)	
Amount of CO_2 emission**		g/kWh	1018	
Starter		V-kW	12-1.4	
Alternator		V-kW	12-0.72	
Battery (IEC 60095-1)		V-A·h	12-64	
CCA		A	580	

**: The amount of CO_2 emission refers to the value obtained by testing the parent engine representing the engine type (engine family member) being used; it shall not guarantee the performance of the machine.
***: For USA, applicable models: 135302513 or later

Unit: dB (A)

Type		Canopy	Cab
NOISE EMISSION			
DECLARED SINGLE-NUMBER NOISE EMISSION VALUES in accordance with ISO 4871*			
Sound power level (2000/14/EC)	Guaranteed sound power level	93	
Emission sound pressure level at the operator's position**	Emission sound pressure level	76	73
Measured values and Uncertainties			
Sound power level (2000/14/EC)	Measured sound power level	92	
	Uncertainty	1	
Emission sound pressure level at the operator's position**	Measured emission sound pressure level	74	71
	Uncertainty	2	2

*: Declared single-number noise emission values are the sum of measured values and the associated uncertainty.
**: Values determined according to noise test code given in ISO 6396.

MACHINE DIMENSIONS

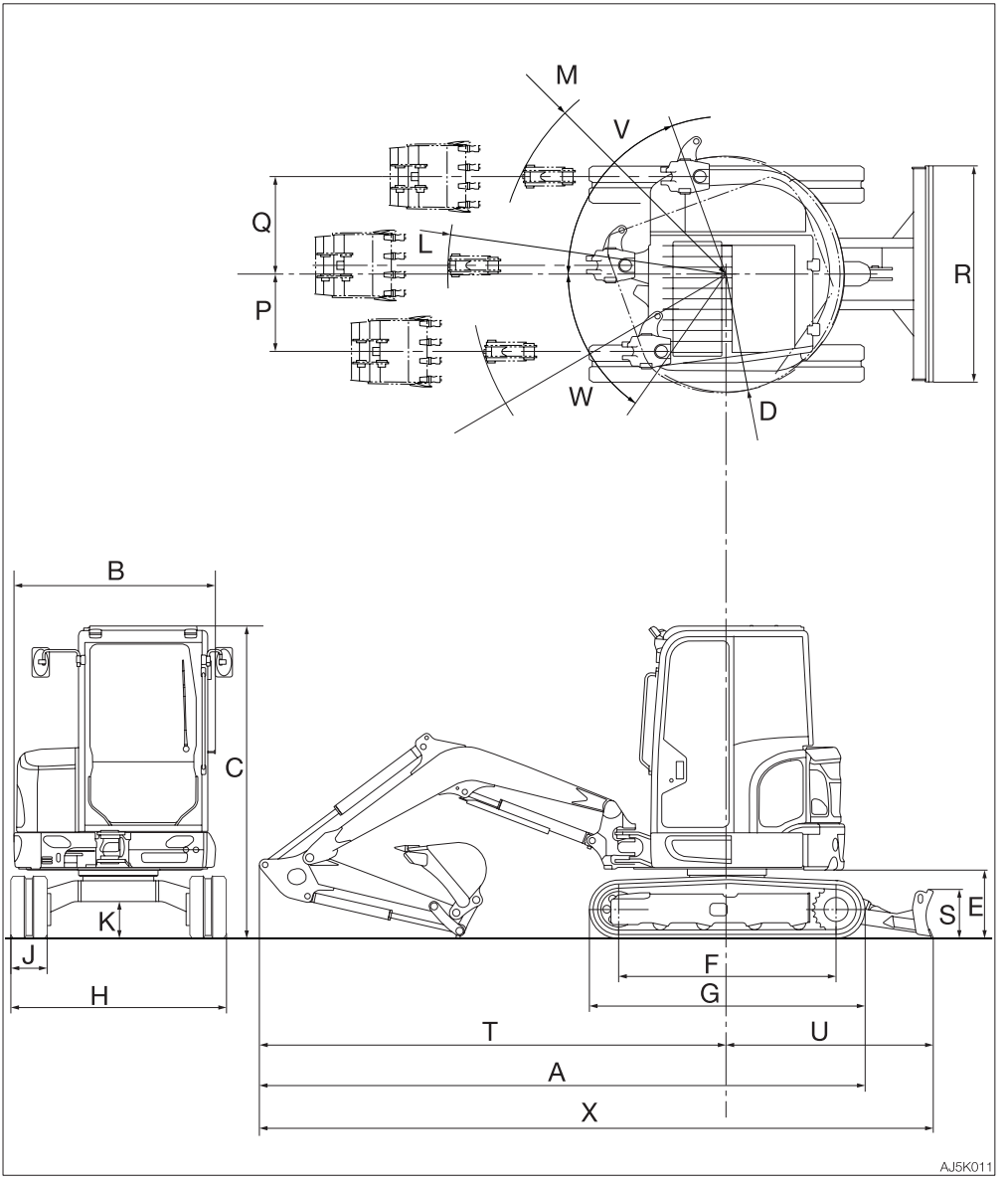

MACHINE DIMENSIONS

Unit: mm (inch)

	Item	Standard arm		Long arm	
		Rubber crawlers	Steel crawlers	Rubber crawlers	Steel crawlers
A	Overall length	4870 (191.7)	4880 (192.1)	4890 (192.5)	4900 (192.9)
B	Upperstructure overall width	1620 (63.8)** 1625 (64)	←	1620 (63.8)** 1625 (64)	←
C	Overall height	2520 (99.2)** 2490 (98)	2525 (99.4)** 2500 (98.4)	2520 (99.2)** 2490 (98)	2525 (99.4)** 2500 (98.4)
D	Slew radius	950 (37.4)	←	←	←
E	Clearance height under upperstructure	550 (21.7)	545 (21.5)	550 (21.7)	545 (21.5)
F	Crawler base	1750 (68.9)	1745 (68.7)	1750 (68.9)	1745 (68.7)
G	Crawler overall length	2215 (87.2)	2220 (87.4)	2215 (87.2)	2220 (87.4)
H	Crawler overall width	1740 (68.5)	←	←	←
J	Crawler shoe width	300 (11.8)	←	←	←
K	Ground clearance of undercarriage	295 (11.6)	290 (11.4)	295 (11.6)	290 (11.4)
L	Minimum radius of equipment and attachment	2240 (88.2)	←	2265 (89.2)	←
M	Minimum radius of equipment at maximum front offset	1835 (72.2)	←	1860 (73.2)	←
P	Offset distance of bucket (right swing)	625 (24.6)	←	←	←
Q	Offset distance of bucket (left swing)	785 (30.9)	←	←	←
R	Dozer blade width	1740 (68.5)	←	←	←
S	Dozer blade height	395 (15.6)	←	←	←
T	Front distance to axis of rotation	3760 (148)	3765 (148.2)	3780 (148.8)	3785 (149)
U	Dozer blade distance to axis of rotation	1650 (65) 1655 (65.2)*	← 1660 (65.4)*	← 1655 (65.2)*	← 1660 (65.4)*
V	Boom swing angle (Left)	70°	←	←	←
W	Boom swing angle (Right)	55°	←	←	←
X	Overall length (dozer blade at rear)	5425 (213.6) 5430 (213.8)*	← 5435 (214)*	5440 (214.2) 5450 (214.6)*	5445 (214.4) ←

*: With an angle dozer blade
**: Canopy

OPERATING RANGES

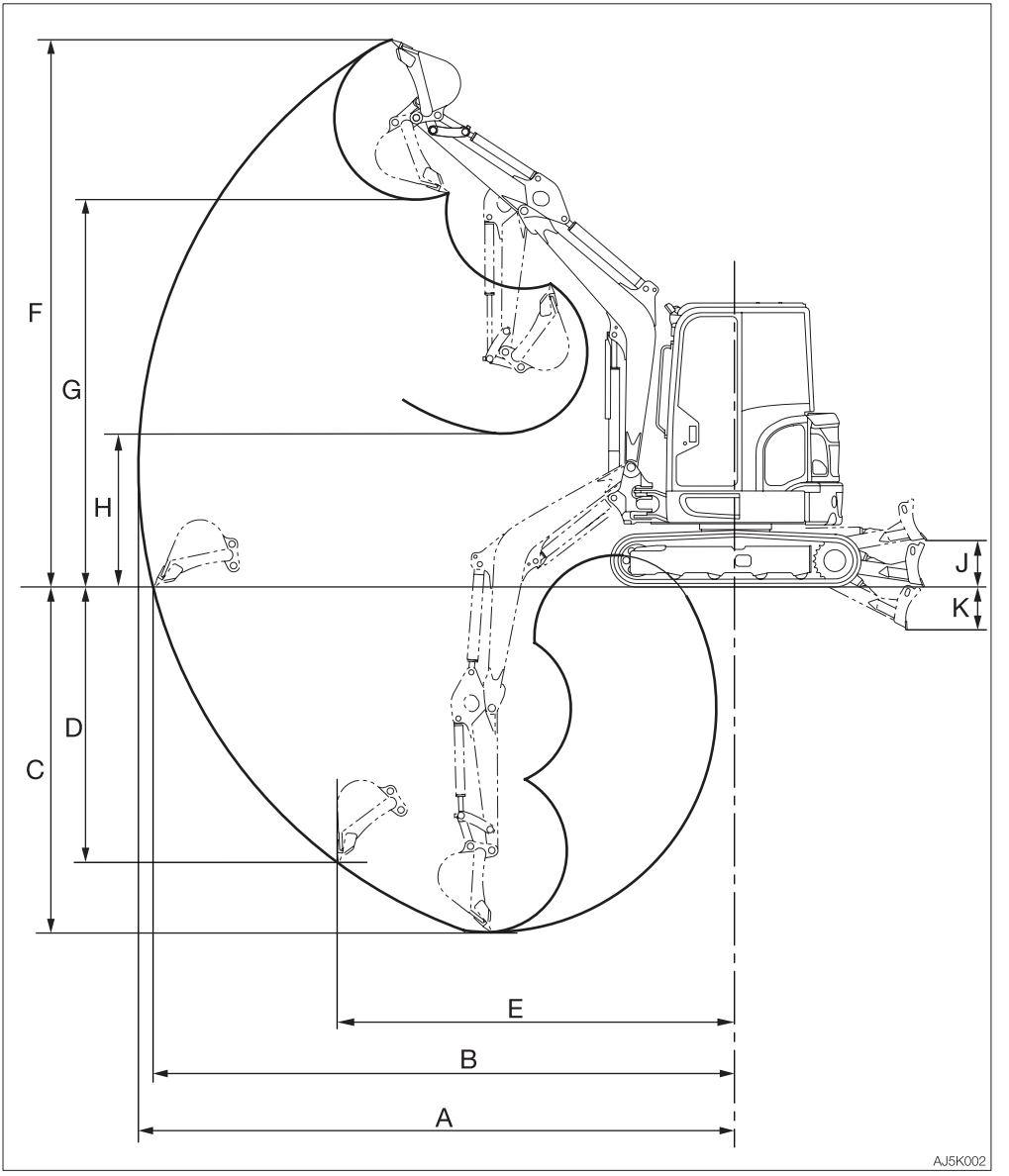

Unit: mm (inch)

	Item	Standard arm		Long arm	
		Rubber crawlers	Steel crawlers	Rubber crawlers	Steel crawlers
A	Maximum reach	5285 (208.1)	←	5430 (213.8)	←
B	Maximum reach at ground reference plane	5155 (203)	←	5305 (208.9)	←
C	Maximum digging depth	3055 (120.3)	3060 (120.5)	3205 (126.2)	3210 (126.4)
D	Maximum vertical digging depth	2365 (93.1)	2370 (93.3)	2505 (98.6)	2515 (99)
E	Reach at maximum vertical digging depth	3605 (141.9)	←	3655 (143.9)	←
F	Maximum height of cutting edge	4845 (190.7)	4835 (190.4)	4945 (194.7)	4935 (194.3)
G	Maximum dumping height	3430 (135)	3420 (134.6)	3530 (139)	3520 (138.6)
H	Minimum dumping height	1355 (53.3)	1350 (53.1)	1205 (47.4)	1200 (47.2)
J	Dozer blade maximum lifting	415 (16.3)	405 (15.9)	415 (16.3)	405 (15.9)
K	Dozer blade maximum lowering	380 (15)	385 (15.2) 390 (15.4)*	380 (15.0)	385 (15.2) 390 (15.4)*

*: With an angle dozer blade

LIFTING CAPACITIES

When an excavator is used to lift loads in Europe, it must comply with EN 474-1: 2022.
Install the following devices, and then turn on the overload warning switch before starting the lifting operation:
- Lifting device
- Lifting safety device

The lifting safety device must include two emergency shut-off valves, one for the boom and the other for the arm.
If the blade is used as an outrigger when lifting loads, the blade cylinder must be equipped with an emergency shut-off valve. Refer to “Lifting safety device (If equipped)” on page 2-124.

Rated lift capacity chart

- The loads in the charts do not exceed 87% of hydraulic lift capacity or 75% of tipping load.
- Figures marked with an asterisk (*, ※) are hydraulically-limited capacities.
- The bucket mass is excluded.
- The mass of slings and any other lifting devices shall be deducted from the rated load to determine the net load that may be lifted.
- The load point is the bucket hinge pin.
- The bucket cylinder is fully extended.
- Unit: kg (lbs)

Lifting device (If equipped)

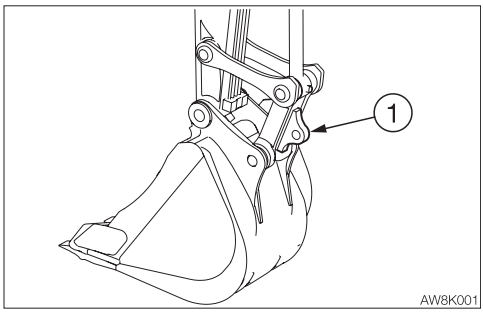

IMPORTANT: When a lifting operation is performed using a machine in Europe, you must use a machine equipped with a lifting device that complies with EN 474-1: 2022. Use a Takeuchi genuine lifting device (1).
If your machine is not equipped with our genuine lifting device (1), you must install an attachment that has a lifting device complying with EN 474-1: 2022.
When such an attachment is required, contact a Takeuchi sales or service dealer for advice.

When lifting loads, install the sling on the lifting device (1).

Load hooking system

A load hooking system must be provided with the following capabilities.
1. A system which can withstand two-and-a-half times the rated lift capacity no matter at what position the load is applied.
2. A system that poses no risk of the lifted load falling from the hooking device. For example, equipped with a hook slippage prevention device.
3. A system that poses no risk of the hooking system slipping from the hoe attachment.

Inspection before lifting loads

Before lifting loads, inspect the following items to ensure there is no abnormality:

- Inspect for any damage to the attachment, hose or lifting device.
- Confirm that the overload warning device operates.
  Turn on the overload warning switch, and then fully raise the boom. If the horn is sounded, the overload warning device is normal.

⚠ WARNING

- **Do not attempt to lift or hold any load that is greater than these rated values at their specified load radii and height.**
- **The rated lift capacities are based on the machine being level and situated on a firm supporting surface. For safe lifting, the operator is expected to make due allowance for the particular job conditions such as soft or uneven ground, non-level condition, load to the machine sides, hazardous conditions, experience of personnel, etc. The operator and other personnel should fully acquaint themselves with the operator's manual furnished by the manufacturer before operating this machine. When operating the machine, the safety rules of the equipment must also be followed.**
- **Do not travel while lifting a load; It is very dangerous.**
- **Do not lift loads when the boom is being swung to the right or left. Doing so could cause the machine to tip over.**

<Cab> Standard arm

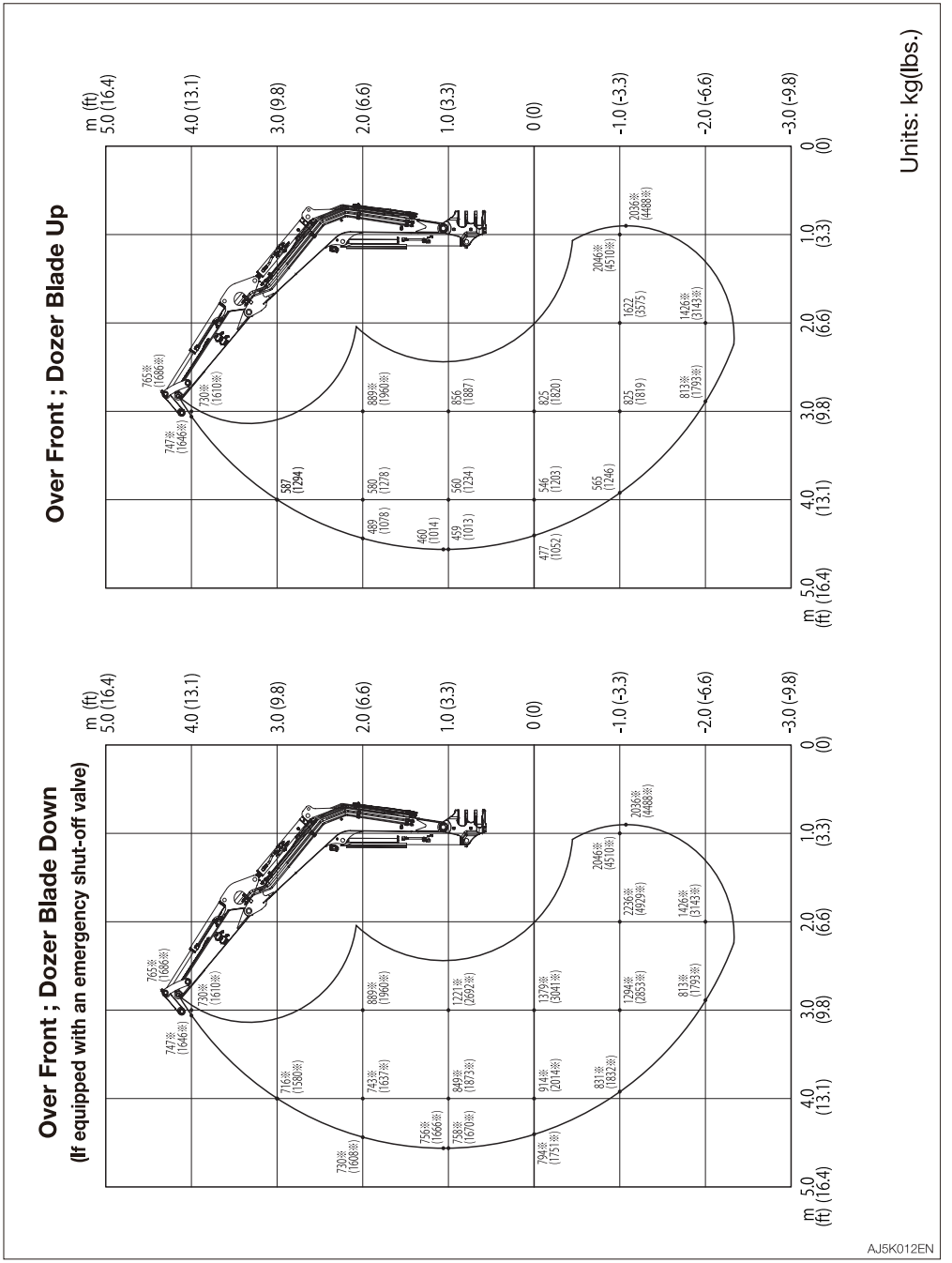

<Cab> Standard arm

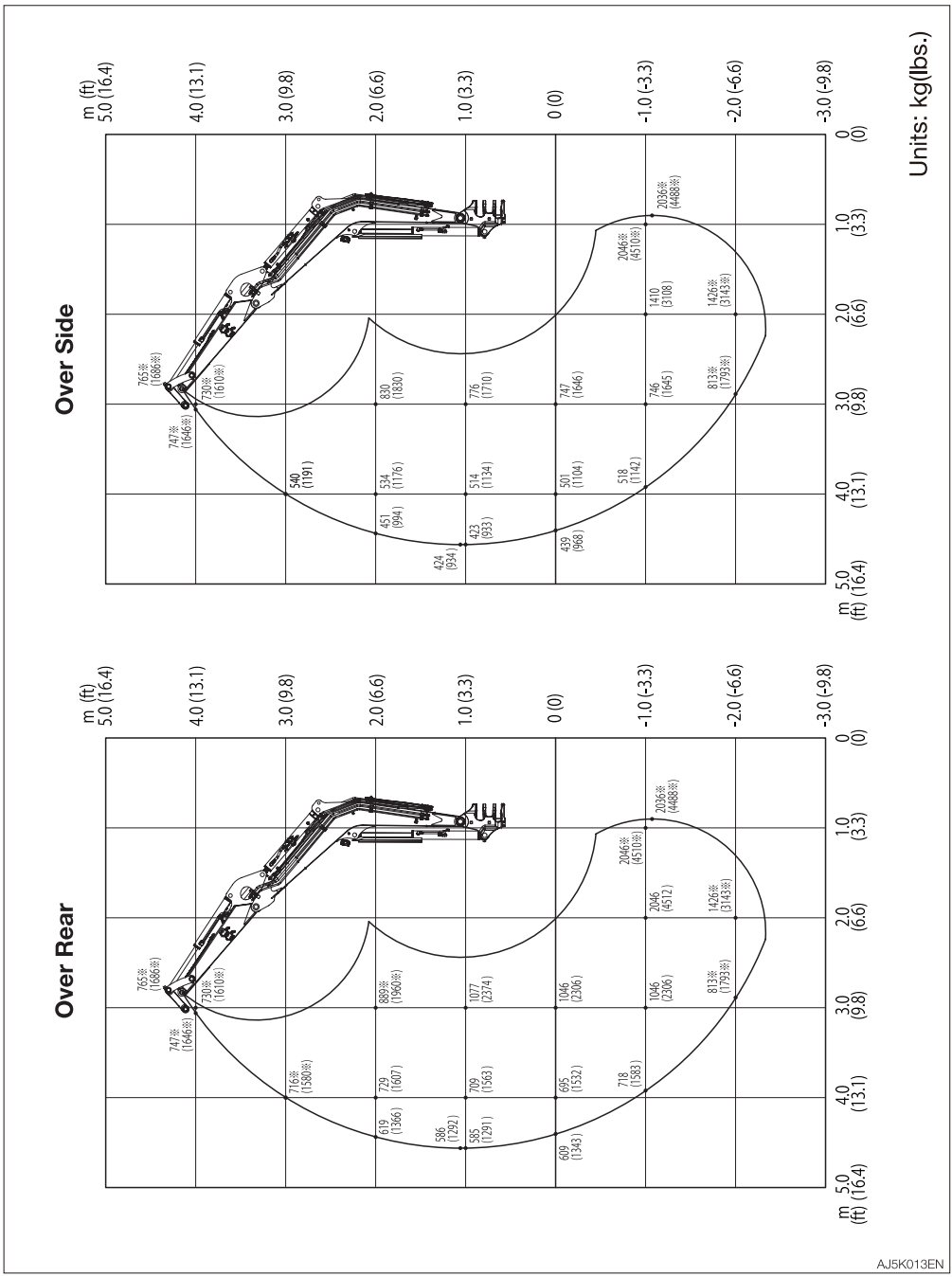

<Canopy> Standard arm

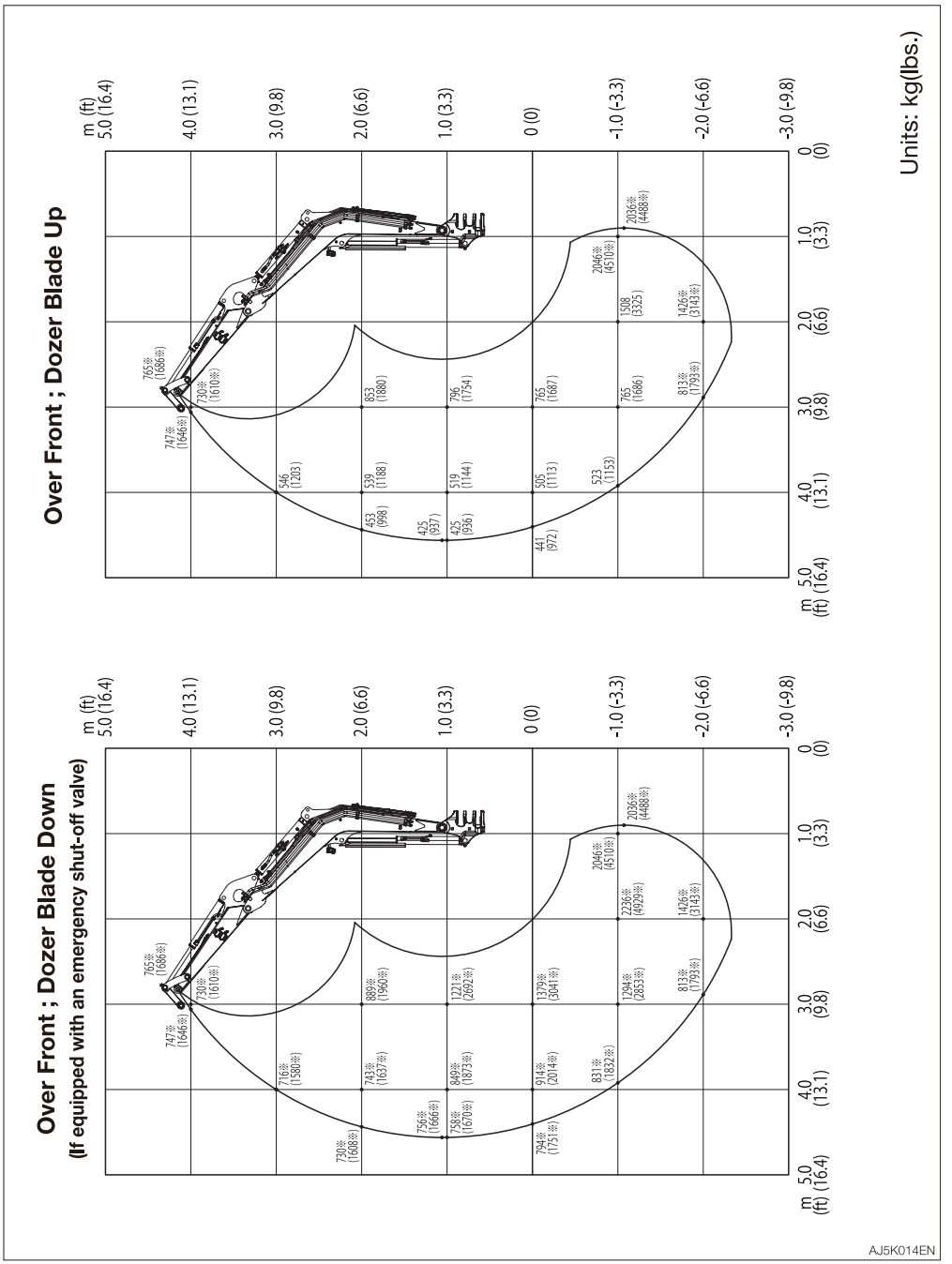

<Canopy> Standard arm

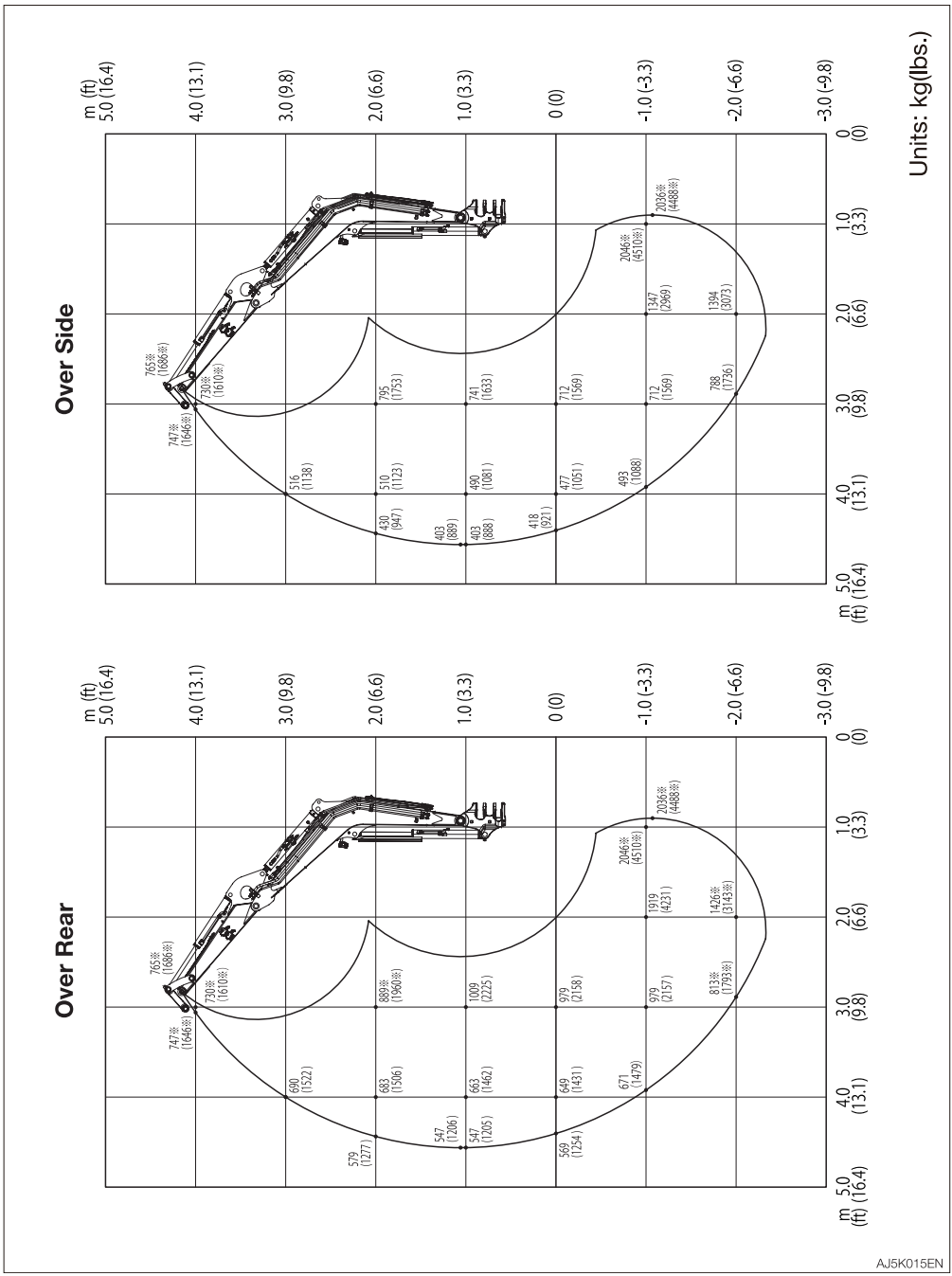

<Cab> Long arm

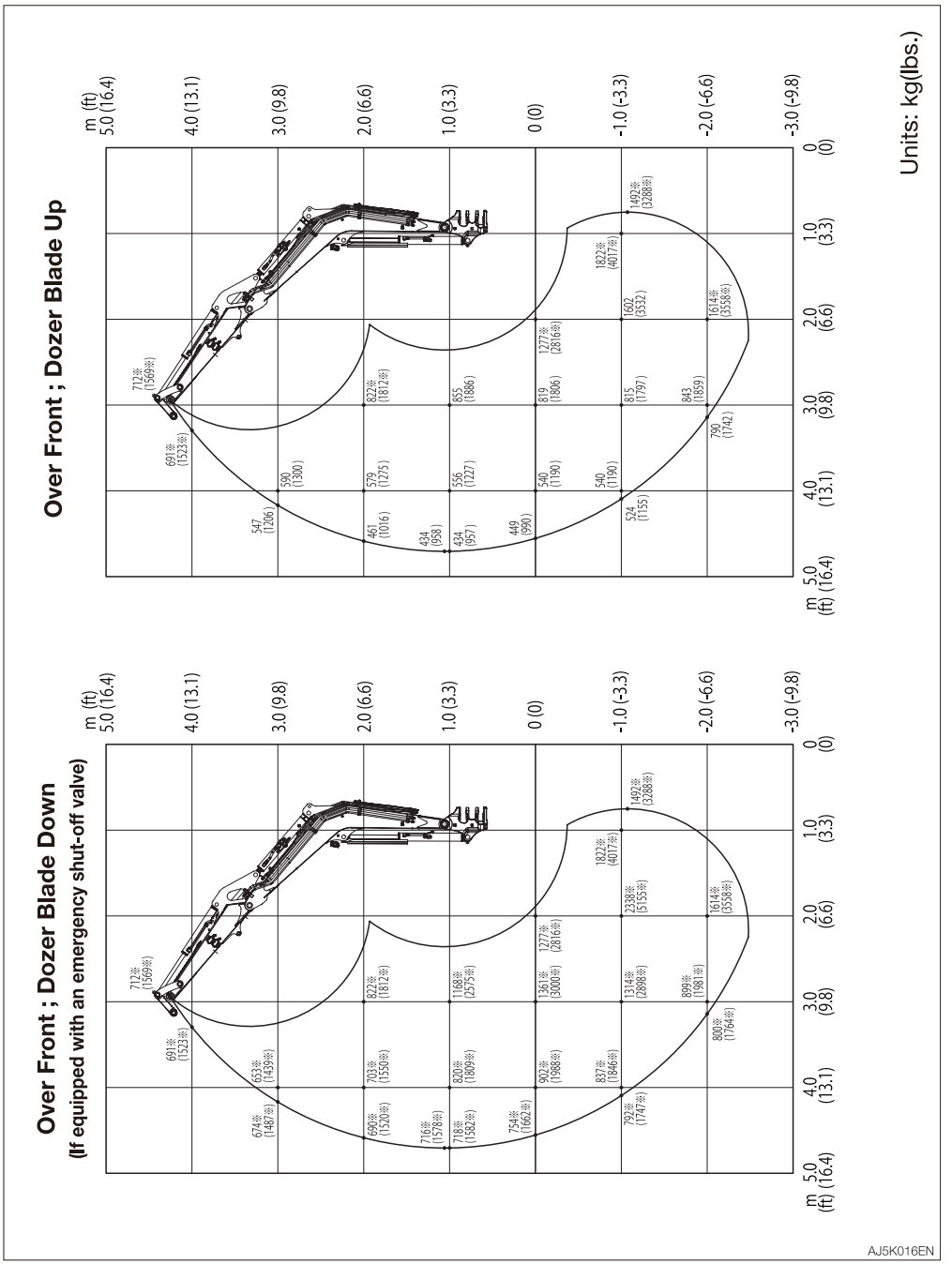
Over Front ; Dozer Blade Up
Over Front ; Dozer Blade Down
(If equipped with an emergency shut-off valve)
Units: kg(lbs.)
m (ft)
5.0 (16.4)
4.0 (13.1)
3.0 (9.8)
2.0 (6.6)
1.0 (3.3)
0 (0)
-1.0 (-3.3)
-2.0 (-6.6)
-3.0 (-9.8)
AJ5K016EN

<Cab> Long arm

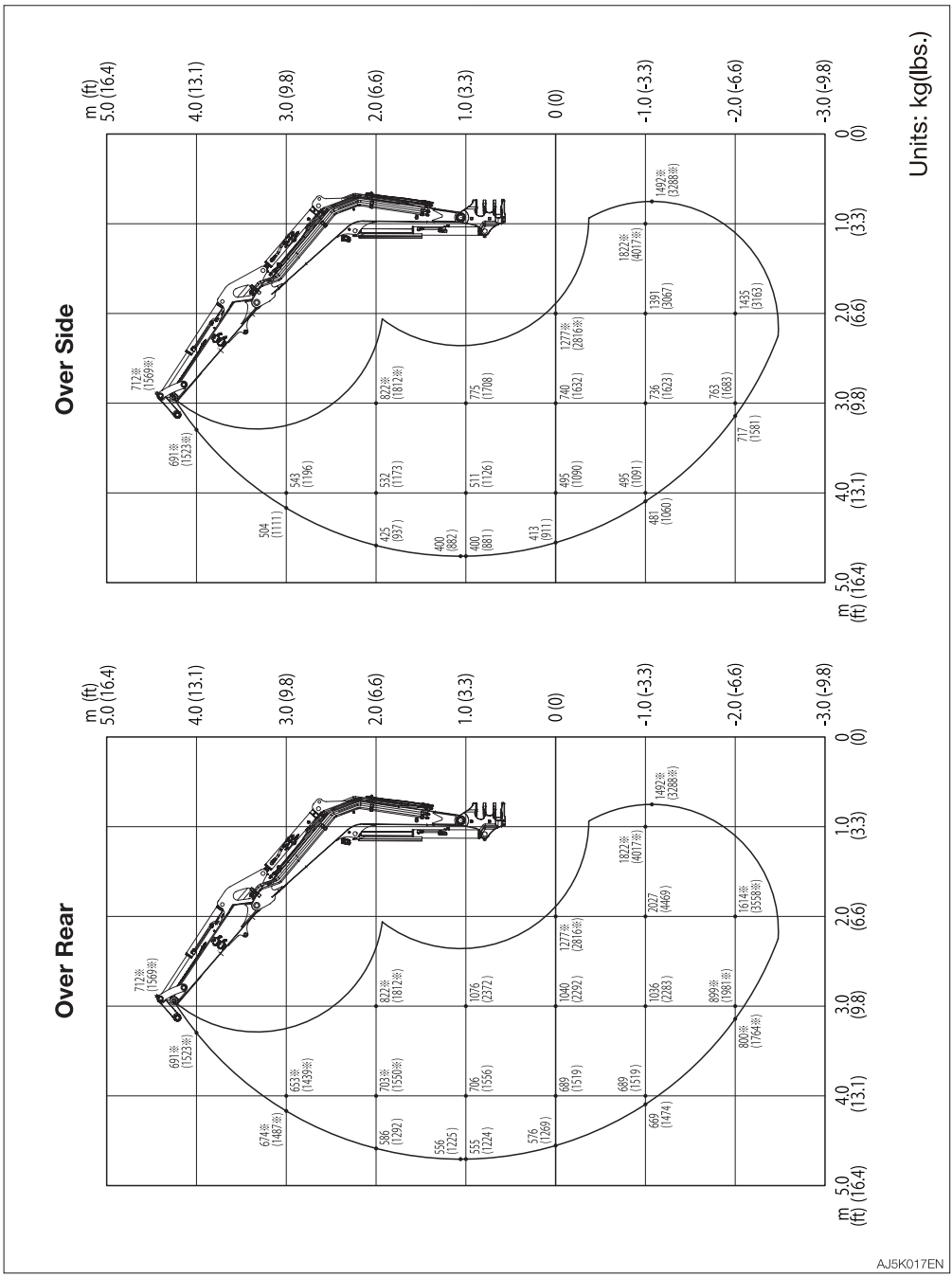
Over Rear
Over Side
Units: kg(lbs.)
m (ft)
5.0 (16.4)
4.0 (13.1)
3.0 (9.8)
2.0 (6.6)
1.0 (3.3)
0 (0)
-1.0 (-3.3)
-2.0 (-6.6)
-3.0 (-9.8)
AJ5K017EN

<Canopy> Long arm

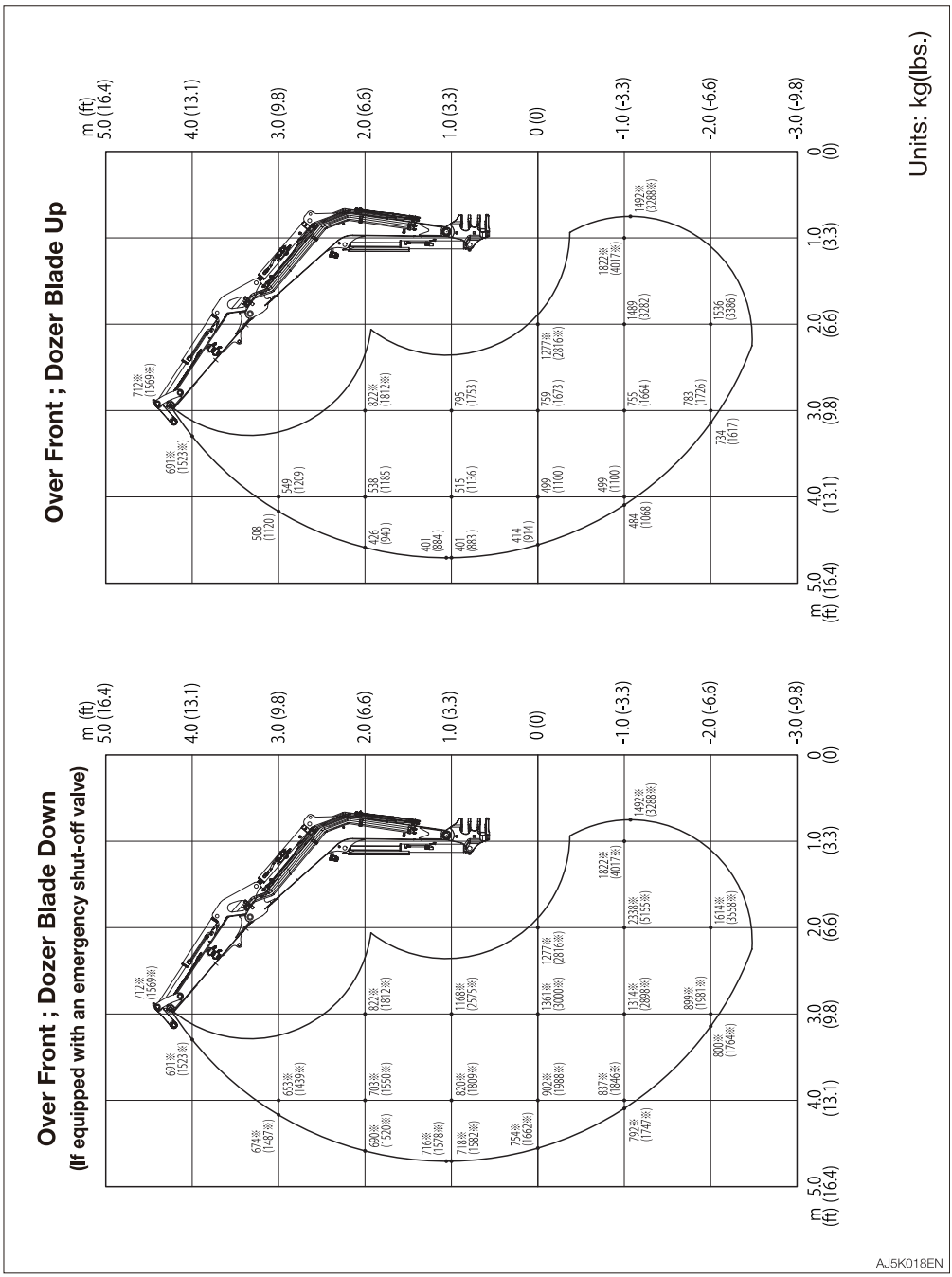

<Canopy> Long arm

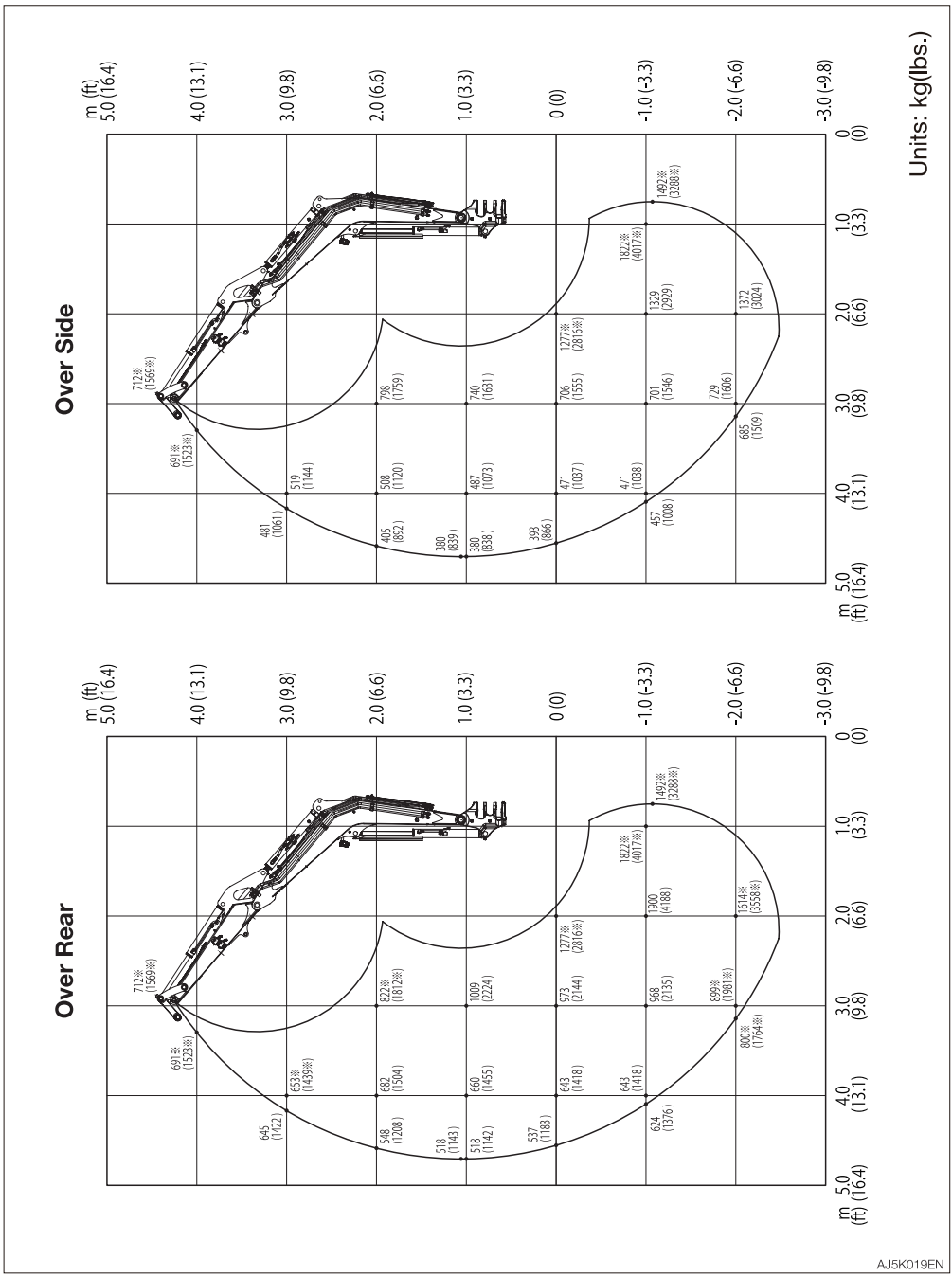

OPTIONS

GENERAL PRECAUTIONS

SAFETY PRECAUTIONS

⚠ WARNING

When removing or installing an attachment or optional part, take the following precautions.

- **Consult with Takeuchi before installing an optional attachment.**
- **Do not use any attachments not approved by Takeuchi. Doing so may cause safety problems. Or, it may adversely affect the machine's operation or service life.**
- **We will not be held responsible for any injuries, accidents or damage to its products caused by the use by a non-approved attachment.**
- **Select a firm, level work area. Also, be sure to park in a well ventilated place.**
- **Clear obstacles and dangerous objects, and clean up spilled fuel immediately.**
- **When lifting, be sure to designate a person to act as a signalman. Follow the instructions of the signalman regarding the procedure and measures.**
- **When it is necessary to temporally place a heavy object or an attachment on the ground during removal or installation, be sure to place it in a stable position.**
- **Keep everyone out of the area when lifting. There is a hazard of objects falling or contacting with people in the area.**
- **Use a crane to move heavy objects (25 kg (55 lb.) or greater).**
- **Before removing a heavy object, be sure to put a support to it. When lifting with a crane, pay attention to the center of gravity of the load to keep the machine in balance.**
- **Do not operate the machine while the load is lifted by a crane stand.**
- **Use the proper procedure when mounting a boom or arm; otherwise serious damage could result. Consult your sales or service dealer for help.**

CAUTIONS WHEN INSTALLING ATTACHMENTS

Be sure to perform a test operation after an optional or other special attachment has been replaced. Inspect the hydraulic oil level and recharge it as necessary. Consult your sales or service dealer for detailed procedures on installing/removing attachments.

CAUTIONS WHEN OPERATING ATTACHMENTS

⚠ WARNING

Long attachments reduce stability of the machine. The machine may tip over if it loses the balance when traveling or slewing on slopes.
Never perform the operations listed below as they are extremely dangerous.

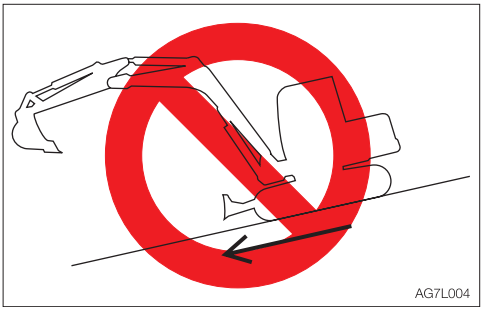

- Traveling down the slopes with the attachment raised



- Traveling across slopes

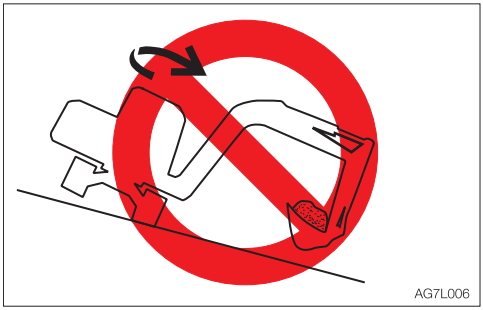

- Slewing on slopes
- If there is a heavy attachment is installed, the machine takes longer distance than usual to come to a complete stop when the stopping operation is performed. Carefully judge the distance so as not to bump into an object around the machine. Keep a safe distance from surrounding obstacles. When a heavy attachment is installed, natural drop (the gradual dropping of the attachment under its own weight when it is stopped in midair) increases.
- The machine can tip over more easily in the lateral direction than in the longitudinal direction.
  - Do not slew sideways with a heavy load at the how attachment. In particular, do not slew sideways on slopes.
  - The attachment is heavier for machines equipped with breakers or crushers than for machines equipped with the standard bucket. Do not operate such machines sideways, especially digging downhill.
- When a long arm is installed, the operating range increases. Carefully judge the distance so as not to bump into an object around the machine. Keep a safe distance from surrounding obstacles.

ATTACHMENT COMBINATION TABLE

The table below shows which bucket should be installed when the machine is using a standard arm or a long arm. Select a proper bucket by following the table.

⚠ WARNING

- **Consult with Takeuchi before installing an optional attachment.**
- **Do not use any attachments not approved by Takeuchi. Doing so may cause safety problems. Or, it may adversely affect the machine's operation or service life.**
- **We will not be held responsible for any injuries, accidents or damage to its products caused by the use by a non-approved attachment.**
- **The swing stopper must be installed when a bucket wider than a 570W (standard) bucket is installed. Failure to do so may result in the bucket hitting the machine body.**

√ :Can be used.
Δ :Can be used only for light operations (digging and loading of dry and loose soil or mud)
— :Cannot be used.
Total bucket mass = Bucket mass + Heaped bucket load (specific gravity: 1.8)

Bucket	Rated capacity m^3 (cu.yd.)	Bucket cutting width mm (inch)	Standard arm 1260 mm (49.6 in.)	Long arm 1410 mm (55.5 in.)
570 W (S.T.D.)	0.105 (0.137)	570 (22.4)	√	√
Total bucket mass = Within 262 kg (578 lb.)		Within 570 (22.4)	√	√

PRECAUTIONS ON THE LOCATION OF THE AUXILIARY LINE

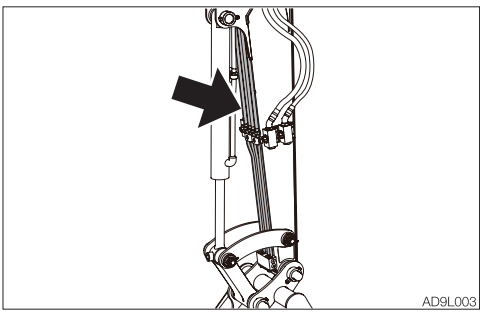

When the auxiliary line is located at the place shown in the figure above, the attachment may come in contact with the line.
Check the shape of the attachment, and install one that will not contact with the auxiliary line.

MEMO

SELECTING A LEVER PATTERN

SELECTING A LEVER PATTERN (A-G)

The operating pattern of the left and right operating levers can be changed.

⚠ WARNING

Before starting the engine, check the selector to see which operating pattern the left and right operating levers are set.

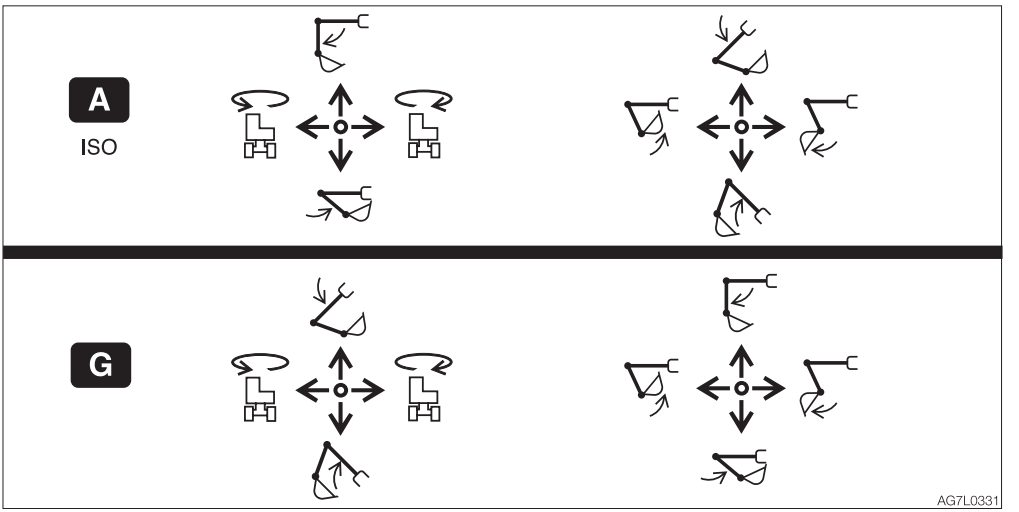

SWITCHING THE LEVER PATTERN

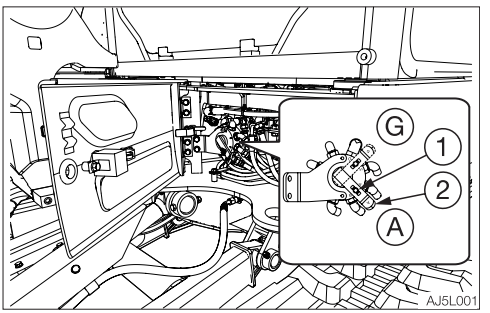

(A) : ISO pattern
(G) : G pattern

1. Park the machine on a flat and rigid ground, and stop the engine.
2. Open the front cover.
3. Loosen the wing bolt (1).
4. Turn the selector valve lever (2) to change the pattern.
5. Tighten the wing bolt (1) and fasten the lever (2) in place.
6. Close the front cover.
7. Confirm the lever pattern.

SELECTING A LEVER PATTERN (A-B)

The operating pattern of the left and right operating levers can be changed.

⚠ WARNING

Before starting the engine, check the selector to see which operating pattern the left and right operating levers are set.

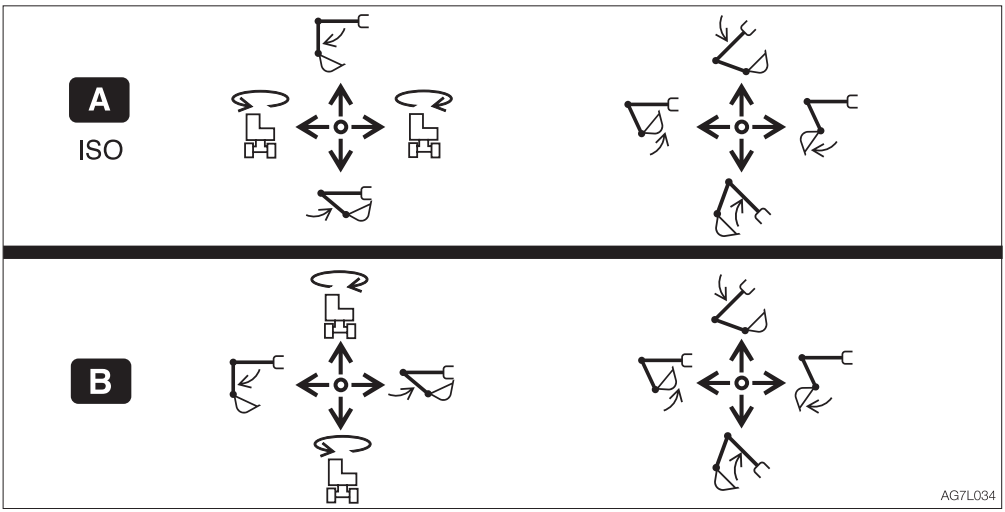

SWITCHING THE LEVER PATTERN

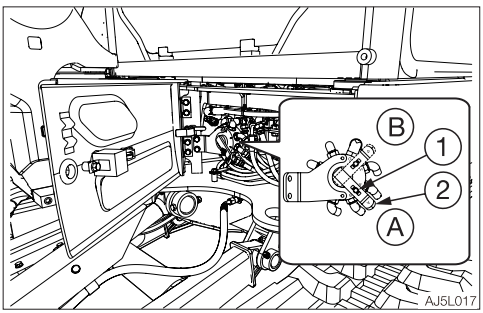

(A) : ISO pattern
(B) : B pattern

1. Park the machine on a flat and rigid ground, and stop the engine.
2. Open the front cover.
3. Loosen the wing bolt (1).
4. Turn the selector valve lever (2) to change the pattern.
5. Tighten the wing bolt (1) and fasten the lever (2) in place.
6. Close the front cover.
7. Confirm the lever pattern.

HYDRAULIC BREAKER

For handling of the breaker, read the hydraulic breaker's manual, provided separately.

IMPORTANT: When installing an attachment, make sure that it is appropriate for the machine being used. Contact your sales or service dealer for advice on selecting attachments.

CAUTIONS ON OPERATING

- Run the machine with 75% of the flow rate. Refer to "Auxiliary 1st flow rate setting" on page 2-40 or 2-68.

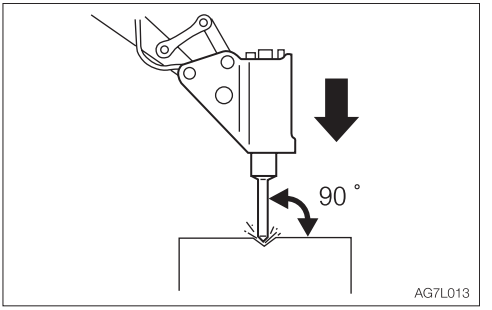

- Pound with the chisel pressed perpendicular to the surface to be pounded.
- When pounding, press the chisel properly against the object to be broken so as to avoid pounding the air.

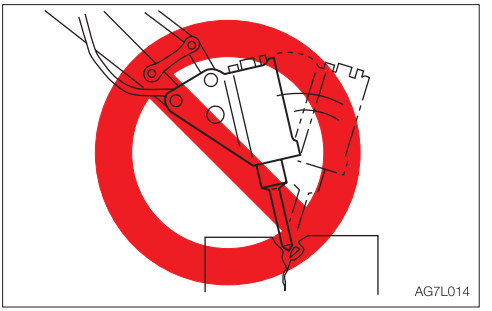

- Do not pry with the chisel or do not pry while pounding.
- Do not move the chisel while pounding.
- Do not pound continuously for over 30 seconds on the same surface.

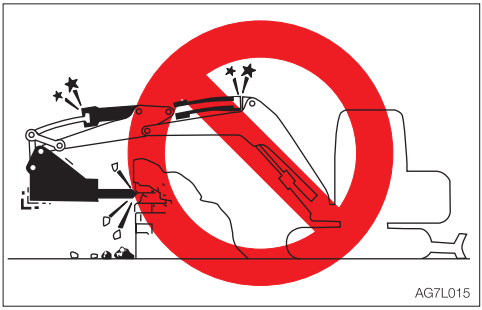

- Do not pound with the cylinder fully extended or retracted (at the stroke end). Leave a margin of at least 50mm (2 in).

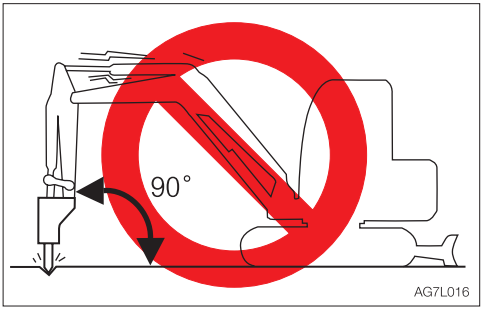

- Do not pound with the arm placed perpendicular to the ground surface.

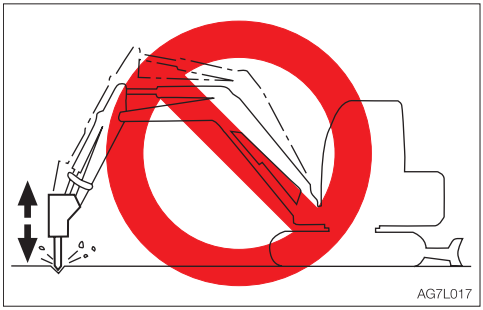

- Do not drop the breaker itself on the object to be broken in order to break it.
- Do not move objects to be broken or rocks with the breaker itself.
- Slew the machine occasionally to cool the engine.
- If a hydraulic hose is vibrating abnormally, nitrogen gas may be leaking from the accumulator. Ask for an inspection early.

REPLACING THE HYDRAULIC OIL REGULARLY

When a hydraulic breaker is used, the oil deteriorates more quickly than that used for a usual operation. Be sure to replace the hydraulic oil and the return filter elements.

- Failure to replace these in time can lead to damage to the machine and the breaker hydraulic system. To improve the service life of the hydraulic systems, be sure to replace the hydraulic oil and return filter element after the number of hours shown on the diagram below.
- When replacing the hydraulic oil, clean the suction strainer.

Replacement interval (hours)

Item	Hydraulic oil	Filter element
1st time	—	25
2nd time	—	100
Periodically	1200 (600)	200

When the breaker operating ratio is 100%.

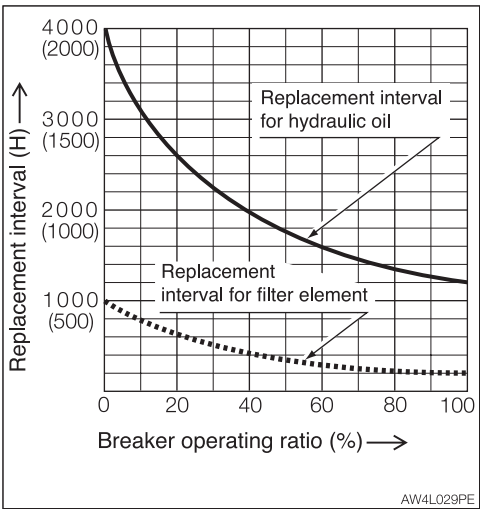

( ): When using conventional antiwear hydraulic oil.

MEMO

TRAVEL ALARM

The alarm sounds while the machine is traveling and stops when the machine stops traveling.
If the alarm does not sound when the machine travels, the fuse may be blown. Inspect the fuses.

⚠ WARNING

If the fuse blows again soon after replacement, then the electric system is likely faulty. It may pose a fire hazard if not properly repaired. Contact your sales or service dealer for advice.

1. Turn the starter key to the OFF position to stop the engine.
2. Open the side cover.

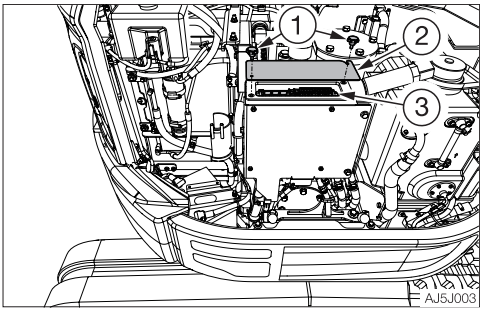

3. Release the lock by turning the knobs (1) counterclockwise.
4. Remove the cover (2).
5. Check for any blown fuses (3).

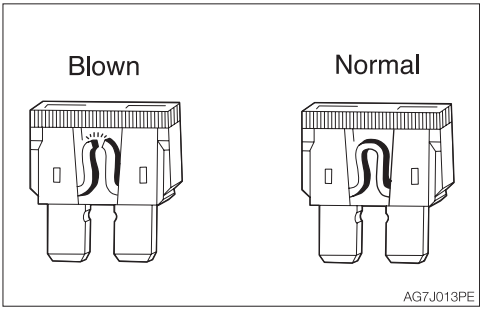

6. If a fuse is blown, replace it with a spare fuse of the same capacity.

Fuse layout and circuits protected

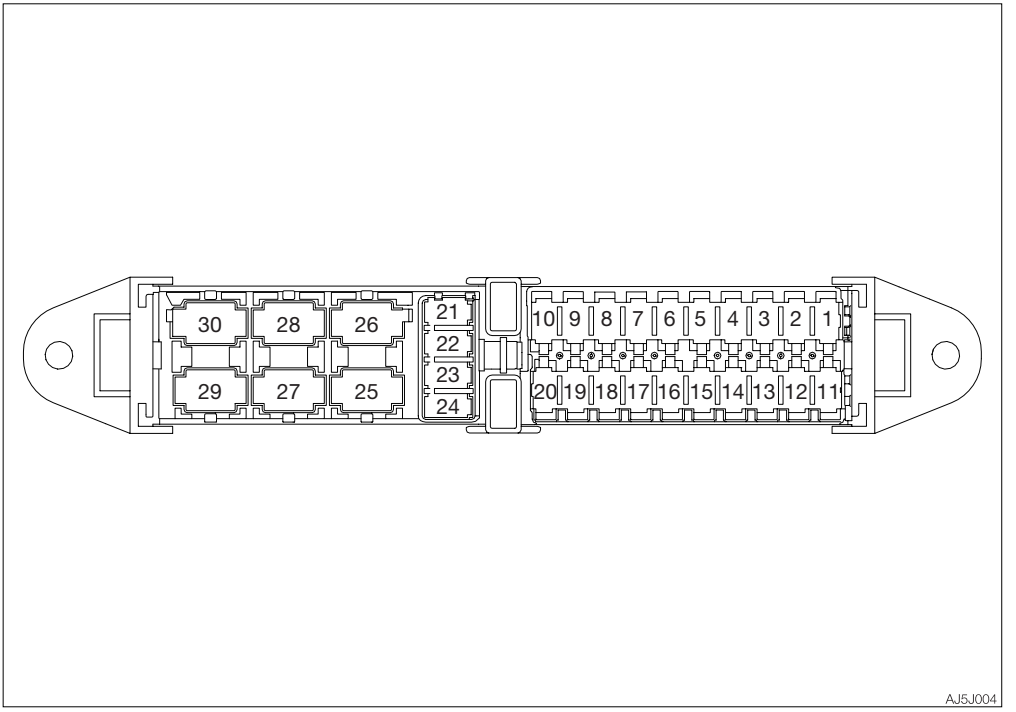

No.	Capacity	Symbol	Protected circuit	Fuse No.
1	10A		Horn	F1
2	10A		Starter switch	F2
3	10A	ECU 	ECU	F3
4	25A	CTL 	Controller power supply	F4
5	15A		Lights	F5
6	15A		Fuel supply pump	F6
7	3A		GPS (B)	F7
8	—	—	—	F8
9	3A		GPS (ACC)	F9
10	10A	MAIN CTL 	Main controller power supply	F10
11	15A		Rear light	F11
12	10A		Beacon	F12
13	15A		Wiper	F13
14	15A	OPT	Option	F14
15	10A		Display	F15
16	10A	ECU 	ECU, **Travel alarm**	F16
17	15A		Safety lock lever	F17
18	10A	SOL (1) 	Solenoid (1)	F18
19	10A	SOL (2) 	Solenoid (2)	F19
20	15A		Immobilizer	F20

No.	Capacity	Symbol	Protected circuit	Fuse No.
21	15A	OPT	Option	F21
22	15A		Air conditioner compressor	F22
23	—	—	—	F23
24	30A		Blower motor	F24
25	50A	S.B.F.1	Fusible link (1)	—
26	40A	S.B.F.2	Fusible link (2)	—
27	40A	S.B.F.3	Fusible link (3)	—
28	40A	S.B.F.4	Fusible link (4)	—
29	40A	S.B.F.5	Fusible link (5)	—
30	25A	S.B.F.6	Fusible link (6)	—

OPTIONAL EQUIPMENT MASS

OPTION		
Steel crawler + Shoe guide		100 (220)
Rubber pads on steel track		195 (430)
Angle blade		70 (155)
Long arm (With thumb bracket)		10 (20)
No bucket		–75 (–165)
Boom + Arm emergency shut-off valves		10 (20)
Auxiliary hydraulic lines	Second auxiliary hydraulic line	10 (20)
	Third auxiliary hydraulic line	10 (20)
	Third auxiliary hydraulic line (hard-lock)	10 (20)
Air conditioning device		25 (55)
Heater		15 (35)
Fuel supply pump		10 (20)
Guard, front		40 (90)
Guard, roof		45 (100)

Units: kg (lb)

*: Mass of optional equipment is added to the standard machine mass.
*: This table only contains the optional equipment of 10kg (20lb) or more in mass.

BIODEGRADABLE OIL

Biodegradable oil is a new type of hydraulic oil that is decomposed into carbon dioxide and water by microorganisms in the soil and water. It is highly safe for living organisms and offers advantages in term of environmental protection.

- Recommended biodegradable oil: Mobile EAL Envirosyn 46H (an ester synthetic oil) and Panolin HLP Synth 46 (an ester synthetic oil).
  When replacing the mineral oil with biodegradable oil, use either of the above brand oil.
  Note that there are oils of other brands, even among ester synthetic oils, which may damage O-rings, packings and seals.
- When switching from a mineral oil to a biodegradable oil, the parking brake torque decreases by about 30%.

REPLACING THE MINERAL OIL WITH BIODEGRADABLE OIL

- A mixture of mineral oil and biodegradable oil or a mixture of different brands of biodegradable oils will result in a decrease in performance of the hydraulic oil, biodegradability and safety. The inside of the hydraulic oil system must be flushed (cleaned) before replacing. The residual mineral oil in the machine should be about 2% or less, as complying with the ISO 15380.
- This operation is dangerous and requires experience. Ask a Takeuchi sales or service dealer for help.

Flushing

To be performed by a Takeuchi sales or service outlet

1. Drain the hydraulic oil (mineral oil) from the hydraulic oil tank and clean the inside of the tank and suction strainer.
   Refer to “Replacing the hydraulic oil and cleaning the suction strainer” on page 5-65.
2. Remove the cylinder hoses and drain the hydraulic oil (mineral oil) from inside the cylinders.
3. Supply new biodegradable oil to the hydraulic oil tank.
4. Bleed the air from the hydraulic pump and cylinders and pressurize the hydraulic tank.
5. Operate the hydraulic devices for 30 minutes.
6. Drain the biodegradable oil from the tank and cylinders.
7. Replace the hydraulic oil return filter with a new filter.
8. Repeat steps 3 and 4.
9. Operate the hydraulic devices for 30 minutes.
10. Drain the biodegradable oil from the tank and cylinders.
11. Repeat steps 3 and 4.
12. Operate the hydraulic devices for 1 hour.
13. Drain the biodegradable oil from the tank and cylinders.
14. Replace the return filter with a new filter.
15. Repeat steps 3 and 4.
16. Operate the hydraulic devices, then check for oil leakage.

There is no need to flush the hydraulic oil system when switching from biodegradable to mineral hydraulic oil.

CAB OPTIONS

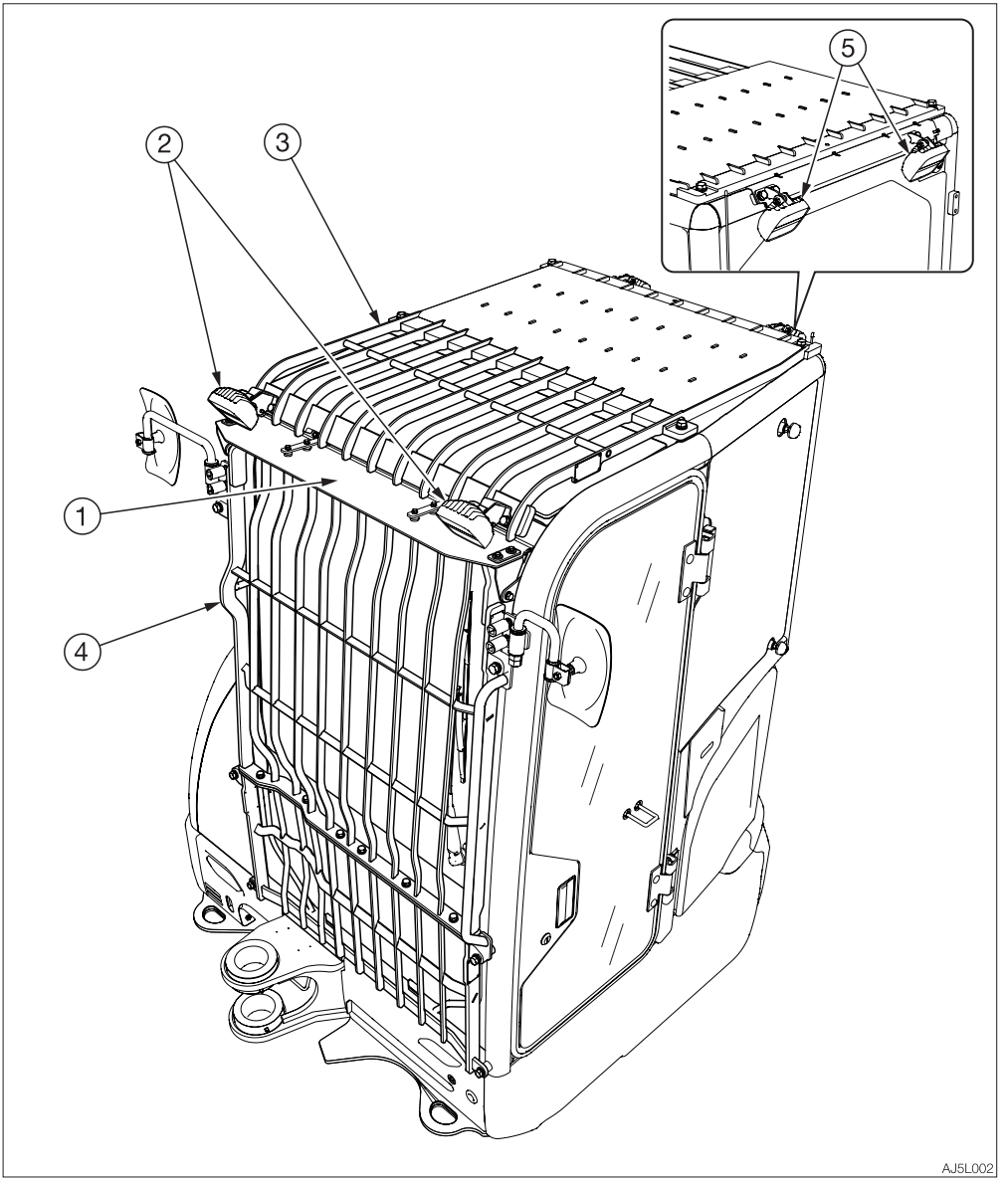

1. Rain guard
2. Front light
3. Roof guard (Level II: ISO 10262)
4. Front guard (Level II: ISO 10262)
5. Rear light

ANGLE DOZER BLADE

⚠ WARNING

- **Do not press the float button while the machine is raised by the dozer blade. Doing so will cause the machine to fall. If you must work beneath the raised machine, always use a secure support to keep the machine raised.**
- **Do not press the float button while the dozer blade is raised. Doing so will cause the dozer blade to fall. Lower the dozer blade to the ground before pressing the float button.**
- **Do not travel forward while the dozer blade is in the float mode.**

IMPORTANT: Do not raise the machine by using the angled dozer blade. Or, the dozer blade may be damaged due to the load concentrated onto a point on the dozer blade.

This dozer blade can be angled (to 25° right or left). Also, it can be used in the float mode.

Angle operation

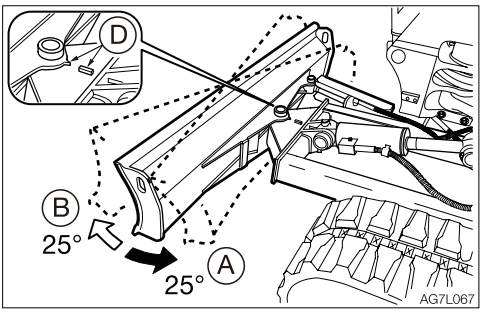

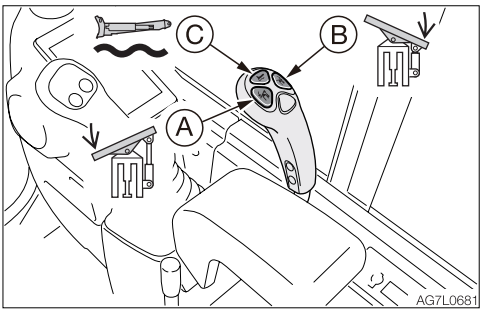

Button (A) .....Left angle (0 to 25°)
Button (B) .....Right angle (0 to 25°)
The dozer blade angle is increased/decreased between 0 and 25° as long as the button is pressed.
To position the dozer blade at a right angle, align the matching marks (D) as shown in the figure.

Float operation

Button (C).....Float mode
To cancel the float mode, press the button again.

Daily inspection (every 10 hours)
Lubricating

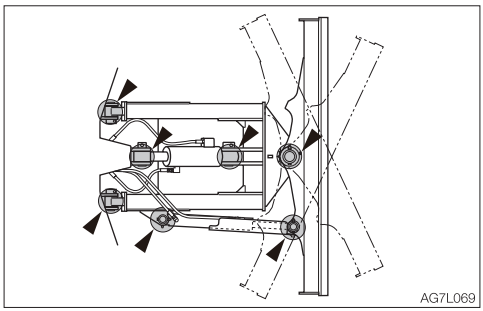

1. Lower the working equipment to the ground and stop the engine.
2. Use the grease gun to lubricate the grease fitting.
3. Wipe off the excess grease.

SPECIFICATIONS

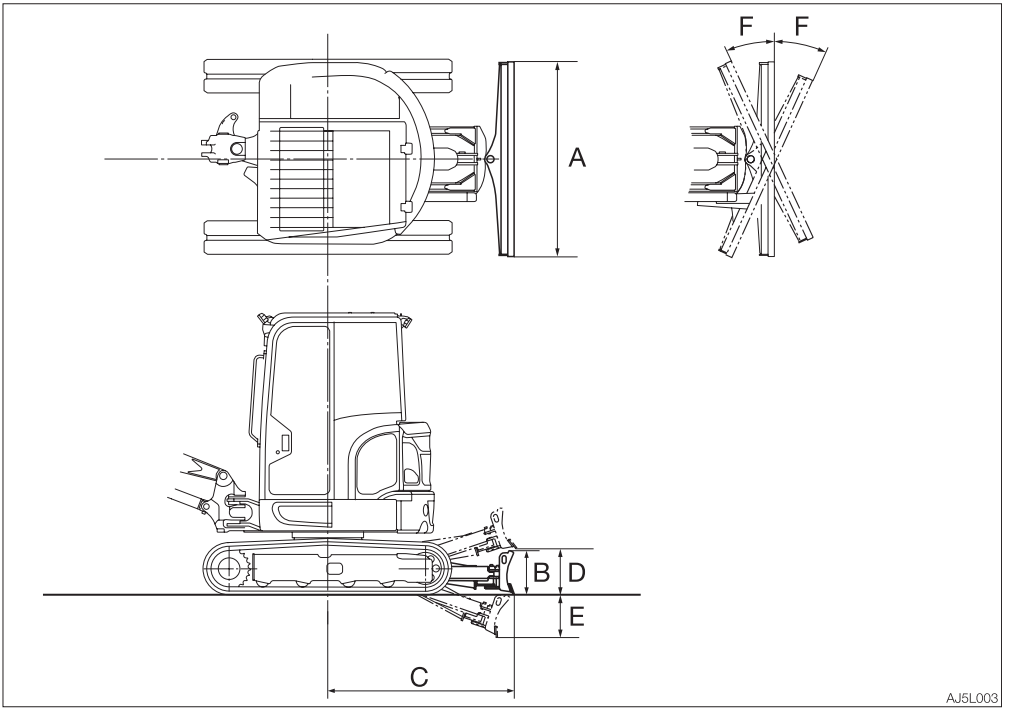

	Item	Rubber crawlers	Steel crawler
A	Dozer blade width	1740 (68.5)	←
B	Dozer blade height	395 (15.6)	←
C	Dozer blade distance to axis of rotation	1655 (65.2)	1660 (65.4)
D	Dozer blade maximum lifting	415 (16.3)	405 (15.9)
E	Dozer blade maximum lowering	380 (15.0)	390 (15.4)
F	Angle degree (Left/Right)	25°	←

Unit: mm (inch)

OPERATING LEVER SWITCH KIT 1

HORN BUTTON

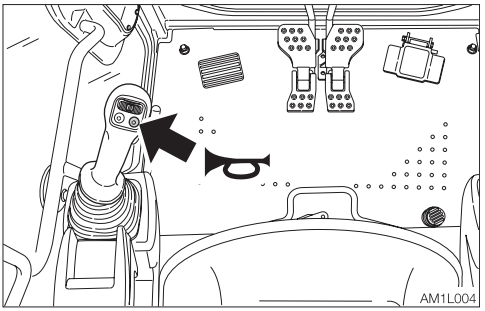

Press the button situated on the left operating lever to blow the horn.

DECELERATION BUTTON

⚠ WARNING

Before operating the deceleration button, set the operating lever to the neutral position and take your foot off the pedals. If the deceleration button is pressed while driving, the machine's operating speed will abruptly change to result in a dangerous situation.

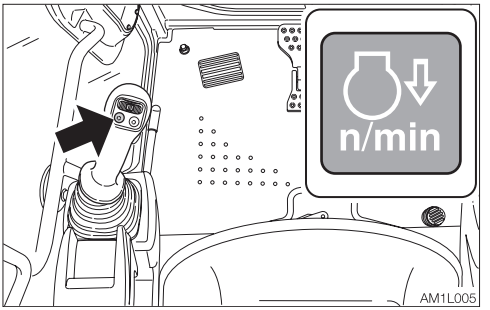

Press this button on the left operating lever to lower the engine speed to low idling. Press the button again to return to the engine speed set with the dial.
For safety reasons, it is designed that the deceleration function is activated to set the engine revolutions to low idling whenever the engine is started.
Cancel the deceleration mode by pressing the deceleration button as necessary.

Note: This deceleration button is capable of decreasing the engine speed and reducing the fuel consumption, with a simple operation, in a situation such as when little engine output is required and thus the operating or the travel levers are in neutral.

TRAVEL SPEED BUTTON

⚠ WARNING

When a load greater than a set value is applied during traveling in 2nd (high) speed, the speed will automatically slow down to 1st (low) speed. When the load becomes lighter, the speed will increase and return to 2nd (high) speed. It should be noted that the travel speed changes depending on the load condition (for machines with the automatic travel shift-down system).

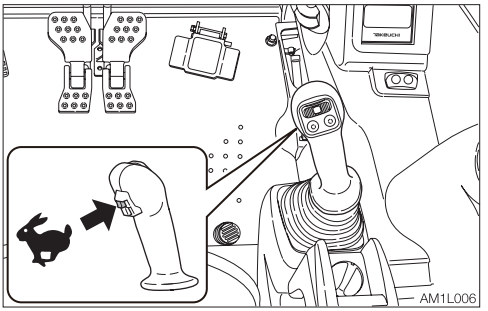

Press this switch to set the travel speed to 2nd (high) speed. Press it again to return to 1st (low) speed.

AUXILIARY 1ST SWITCHES

Auxiliary hydraulic buttons

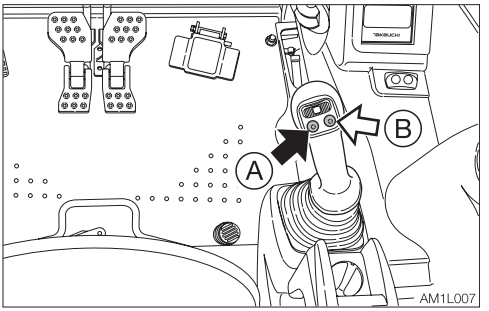

Press those buttons to control the flow of the oil in the first auxiliary hydraulic lines.

- Proportional control of the auxiliary hydraulic circuit is not possible.

(A).....Hydraulic oil flows to the left auxiliary line (a).

(B) .....Hydraulic oil flows to the right auxiliary line (b).

Slider switch (Proportional control)

Proportional control allows for slow-to-fast/ fast-to-slow movement of attachment. Example: If you move the slider switch half way, the attachment will move at approximately one-half the speed.

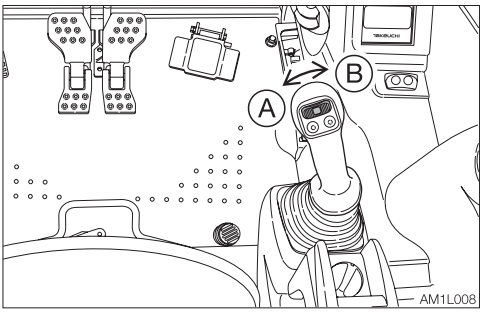

Move this switch to control the flow of the oil in the first auxiliary hydraulic lines.

(A).....Hydraulic oil flows to the left auxiliary line (a).

(B) .....Hydraulic oil flows to the right auxiliary line (b).

Refer to “Auxiliary hydraulic lines (If equipped)” on pages 2-116 to 2-122.

AUXILIARY 2ND/4TH SWITCH

Slider switch
(Proportional control)
Proportional control allows for slow-to-fast/ fast-to-slow movement of attachment.
Example: If you move the slider switch half way, the attachment will move at approximately one-half the speed.

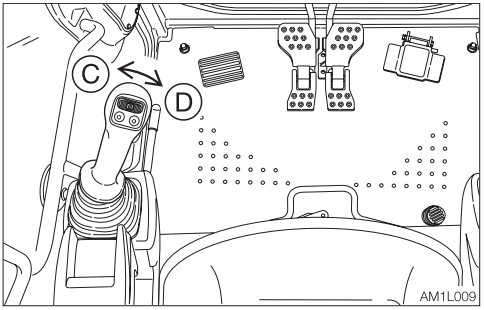

Move this switch to control the flow of the oil in the second auxiliary hydraulic lines.
(C): .....Hydraulic oil flows to the left auxiliary line (c).
(D): .....Hydraulic oil flows to the right auxiliary line (d).

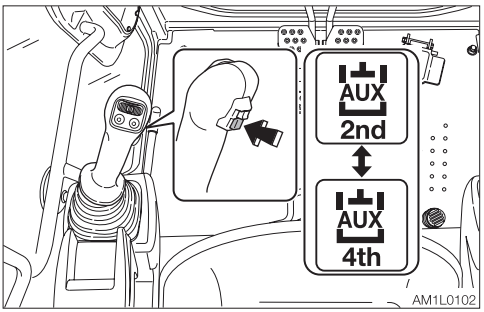

To use the auxiliary 4th hydraulic line, press the auxiliary 2/4 select button to change to the operation of the auxiliary 4th.
Refer to “Auxiliary hydraulic lines (If equipped)” on pages 2-116 to 2-122.

AUXILIARY 2/4 SELECT BUTTON

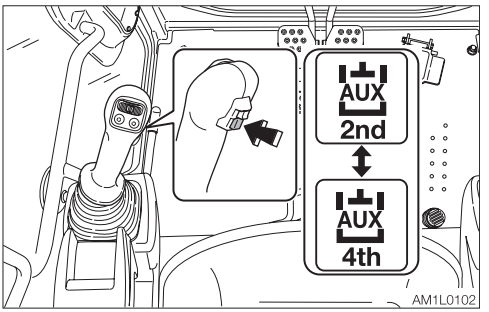

This button is used to change from the second auxiliary operation to the fourth auxiliary operation.
Pressing this button displays the second auxiliary on the display to indicate that the second auxiliary operation is enabled.
Pressing this button one more time displays the fourth auxiliary on the display to indicate that the fourth auxiliary operation is enabled.
The actual operation is performed with the auxiliary 2nd/4th switch (slider switch).

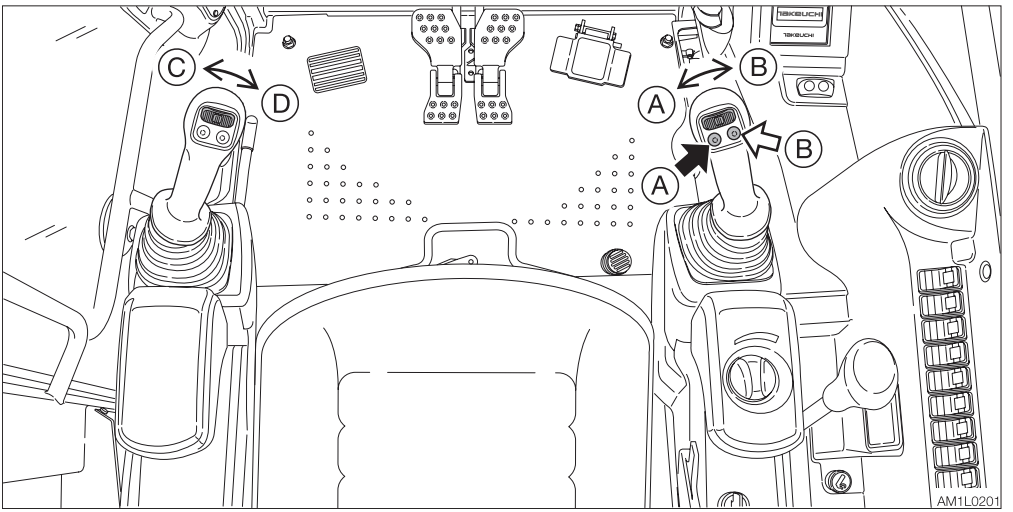

Operating

Press those buttons to control the flow of the oil in the first/second auxiliary hydraulic lines.

(A).....Hydraulic oil flows to left auxiliary line (a).

(B) .....Hydraulic oil flows to right auxiliary line (b).

(C) .....Hydraulic oil flows to left auxiliary line (c).

(D) .....Hydraulic oil flows to right auxiliary line (d).

Refer to “Auxiliary hydraulic lines (If equipped)” on pages 2-116 to 2-122.

Releasing the residual pressure

After the auxiliary hydraulic circuits have been used, pressure remains in the circuits. This is called the residual pressure. Release this residual pressure before disconnecting the lines.

Perform the residual pressure releasing within 10 minutes after the engine stopping.

1. Park the machine on a flat, rigid and safe ground.
2. Stop the engine.
3. Lower the safety lock lever to the unlocked position.
4. Turn the starter switch to the ON position.
5. Press the auxiliary hydraulic switches several times to release the residual pressure in the auxiliary hydraulic circuitry.

TAKEUCHI SECURITY SYSTEM

The Takeuchi Security System is a system that allows only registered starter keys to be used for starting the engine.
The engine cannot be started with any unregistered or counterfeit starter keys. If a registered starter key is lost or stolen, you can set the system to delete the registered key information, so that the lost or stolen key cannot be used to start the engine. Although machine theft cannot be completely prevented, the system certainly helps reduce the risk of theft.

STARTER KEY

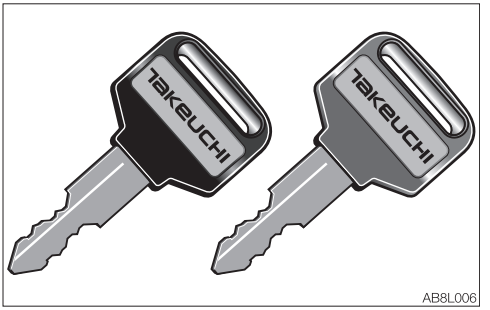

There are two types of starter key, red and black, which can be registered in the Takeuchi Security System.
The red key is the master key. The black key is the starting key.

STARTING THE ENGINE

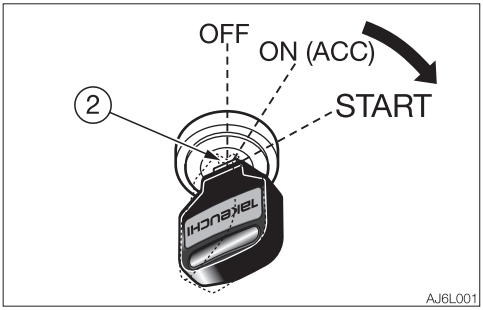

The engine can be started using the normal method with a registered BLACK key.
The engine cannot be started using the RED master key.
Refer to Chapter 3, “Starting and stopping the engine”.

If an attempt is made to start the engine with an unregistered key:

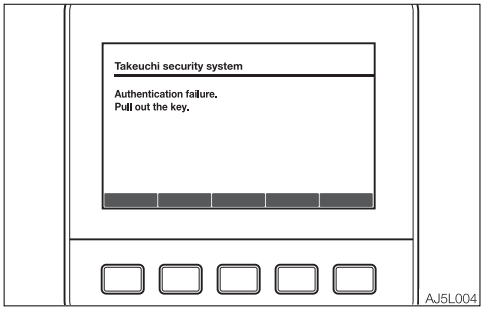

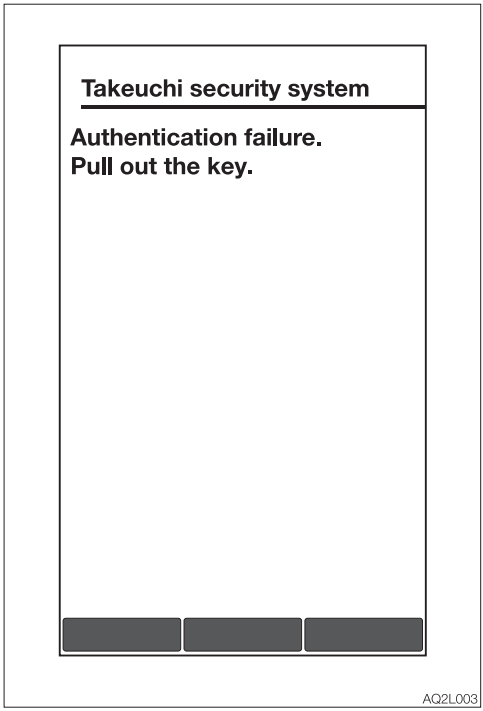

If an unregistered starter key is turned from the OFF to the ON (ACC) position, the message “Authentication failure” appears and the alarm starts sounding.
If this attempt is repeated five times in a row, the horn sounds for two minutes, and the engine cannot be started. The horn stops when the key is turned to the OFF position.

REGISTERING AND DELETING THE STARTER KEY

⚠ WARNING

- **Sit on the operator's seat.**
- **Raise the safety lock lever to the locked position.**
- **Clear all people from the machine and the area.**
- **Sound the horn to warn people around the machine.**

Registration may fail if the starter key is on a keyring or keychain; remove it before starting registration.
A malfunction could occur if multiple starter keys are brought near to the key cylinder. Be sure that no starter keys other than the correct key are near the key cylinder during registration.

Starter key registration procedure
For Steps 1 to 6 below, complete each step and proceed to the next one within five minutes. If no operation is performed for five minutes during this procedure, the system returns to the initial state.
From Step 7 onward, the system automatically ends the operation if no operation is performed for five minutes.

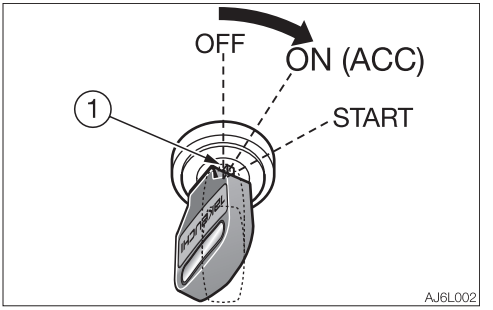

1. Insert the master key (1) into the starter switch and turn the key from the OFF to the ON (ACC) position.

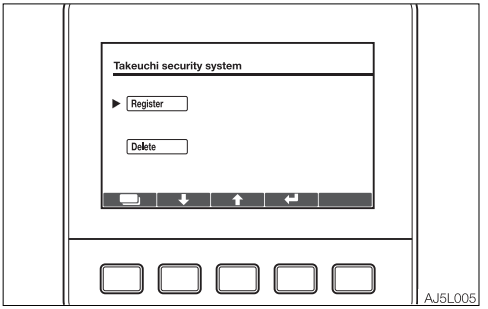

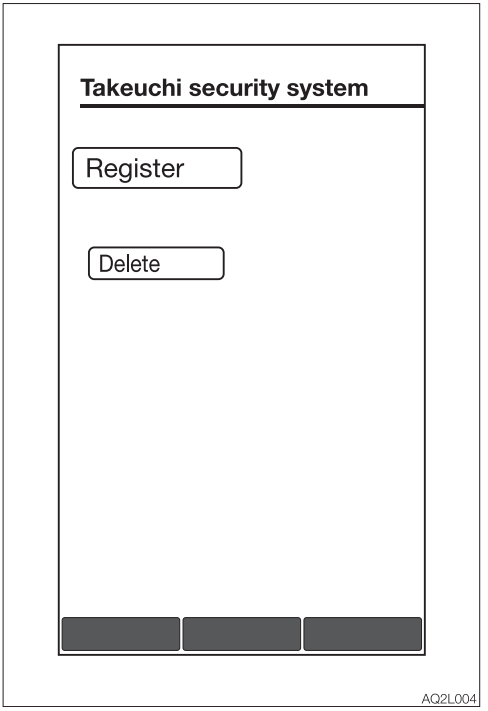

<Canopy>
2. On the LCD, select “Register” and press (A).

<Cab>
2. Select “Register”.

Touch operation
Tap the item to be selected.

Dial operation
Use the up/down of the dial to select the item, and then press the dial to confirm. (The selected item is displayed enlarged.)

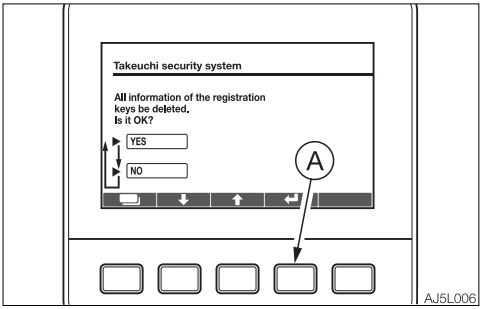

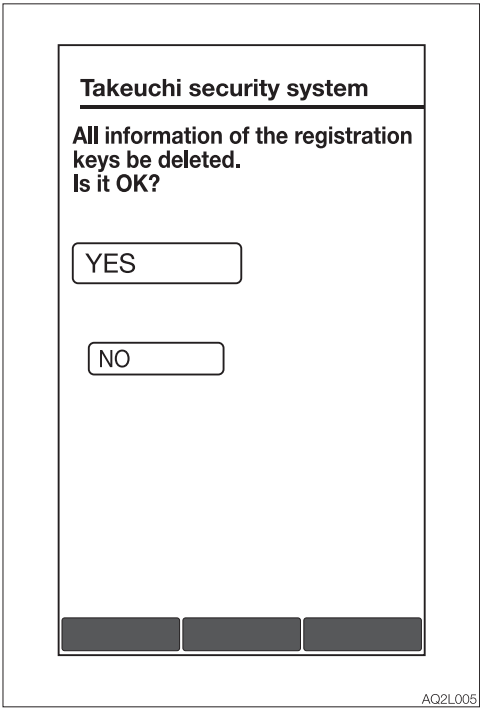

3. Select whether to delete all of the existing registration information on the starter key.

<Canopy>
On the LCD, select “YES” and press (A): All registration information will be deleted; register a new key.
On the LCD, select “NO” and press (A): A new starter key will be added to the existing registration information.

<Cab>
Touch operation
Tap the item to be selected.

Dial operation
Use the up/down of the dial to select the item, and then press the dial to confirm. (The selected item is displayed enlarged.)

YES: All registration information on the starter key will be deleted; register a new key.
NO: A new starter key will be added to the existing registration information.

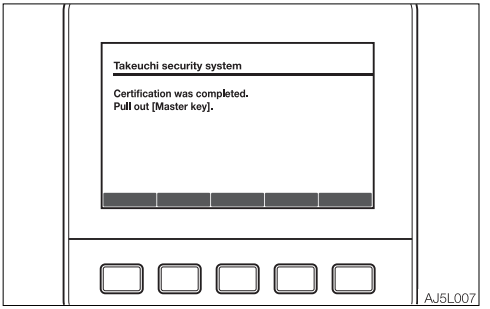

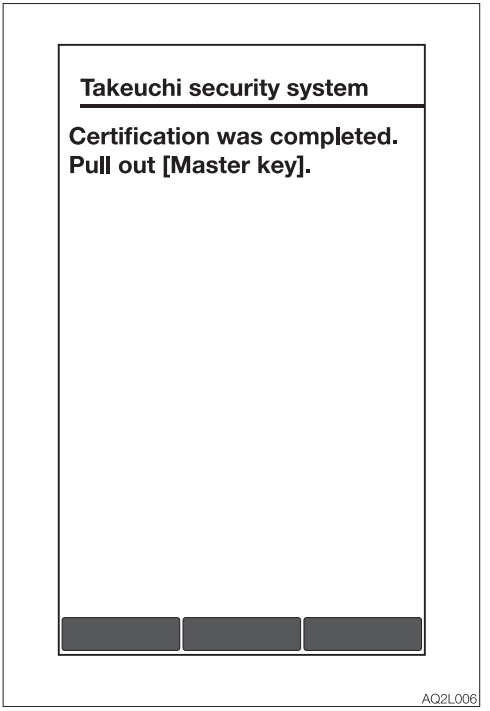

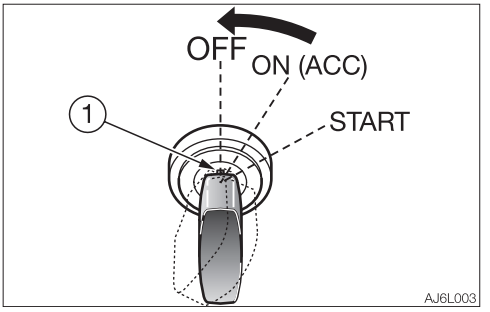

4. When the message “Certification was completed” appears on the LCD, turn the master key (1) from the ON (ACC) to the OFF position, and then remove it from the starter switch.
   Up to 13 starter keys can be registered.

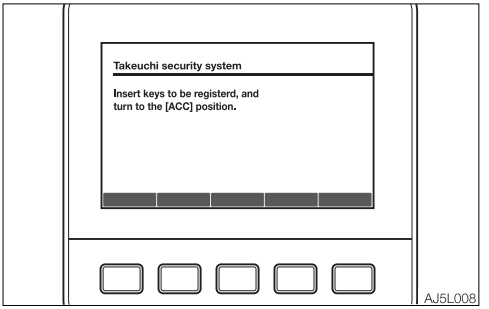

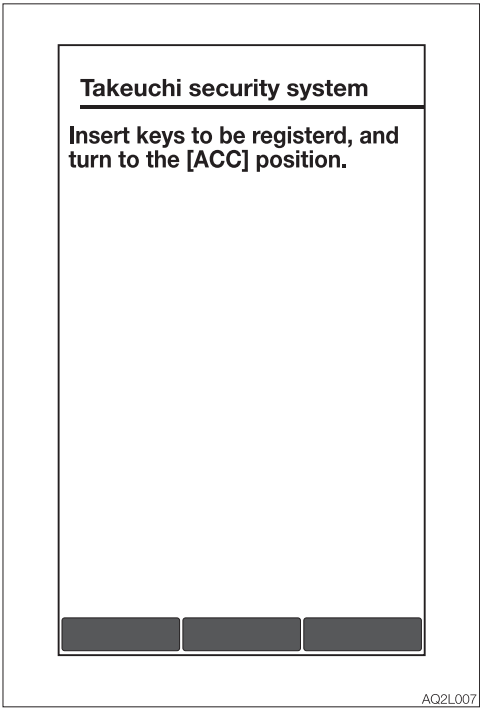

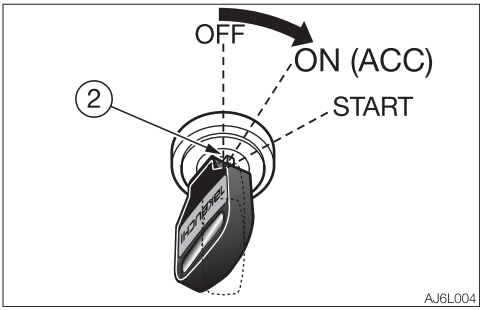

5. Insert the starter key (2) to be registered into the starter switch and turn the key from the OFF to the ON (ACC) position.

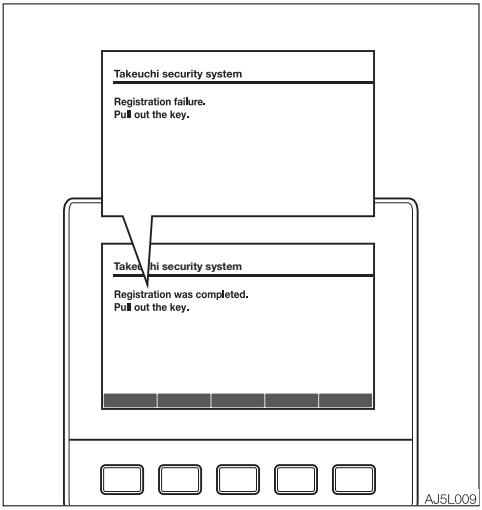

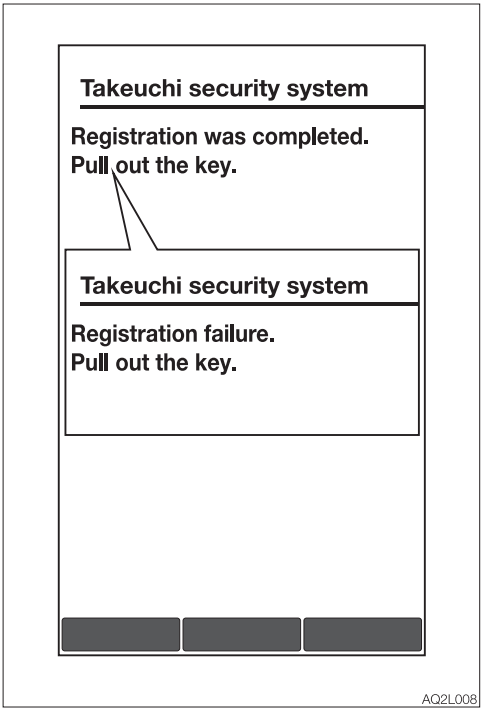

6. If the registration was successfully completed, the message “Registration was completed” appears. This means that the starter key (2) currently inserted has been registered.
   If the registration fails, the message “Registration failure” appears.

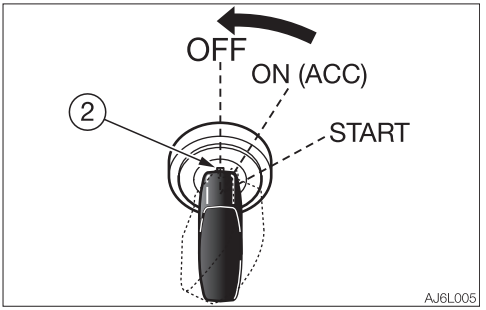

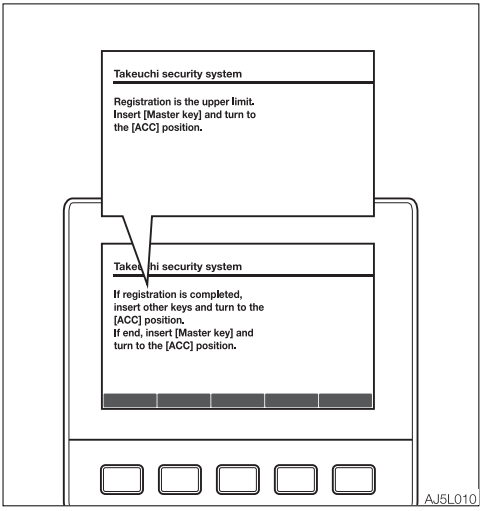

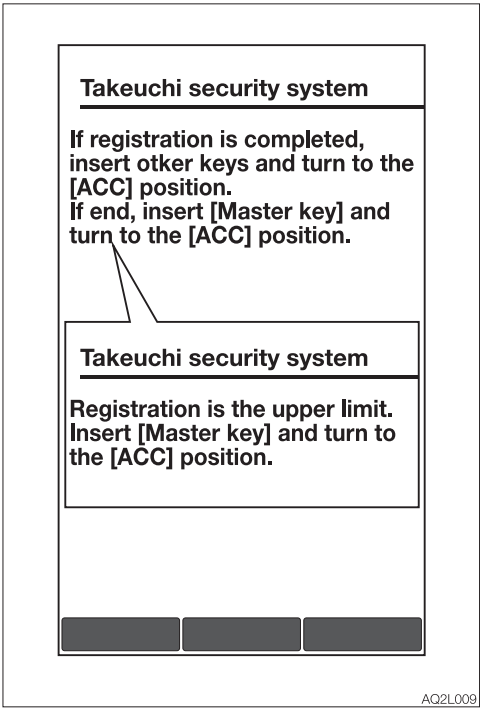

7. Turn the starter key (2) from the ON (ACC) to the OFF position, and then remove it from the starter switch.
   To continue registration, repeat the steps from Step 5.
   To end registration, proceed to Step 8.

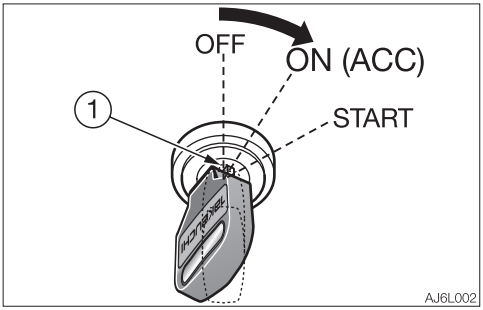

8. Insert the master key (1) into the starter switch and turn the key from the OFF to the ON (ACC) position. Or, wait for five minutes or more.

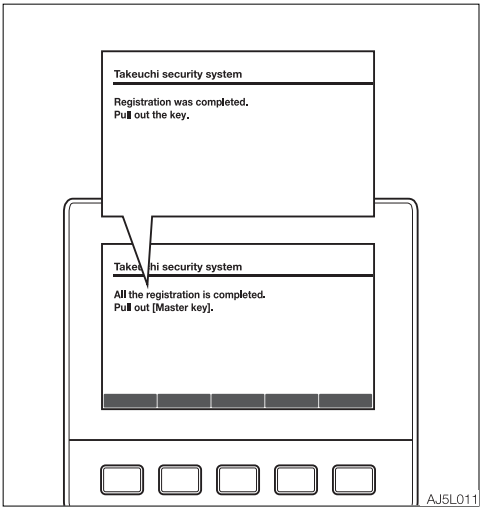

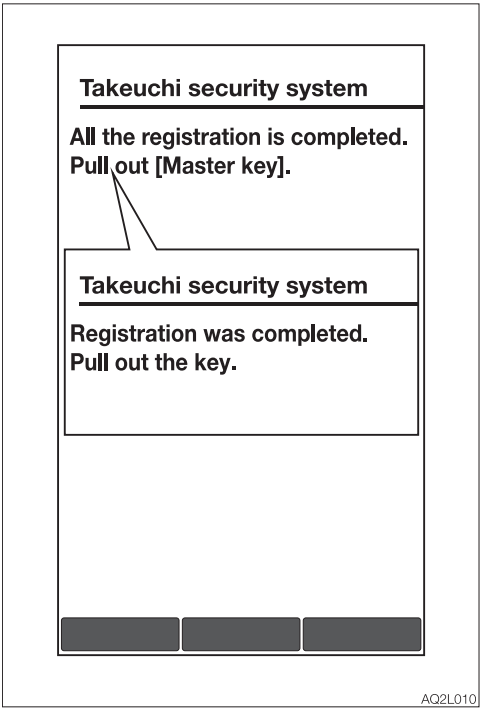

9. If any starter key has been registered, the message “All the registration is completed” appears. Turn the master key (1) from the ON (ACC) to the OFF position, and then remove it from the starter switch to complete the registration.
   If no starter key has been registered, the message “Registration failure” appears, and the registration information is returned to the initial state.

Deleting a registered starter key
The information of each registered starter key can be deleted to cancel its ability to start the engine.

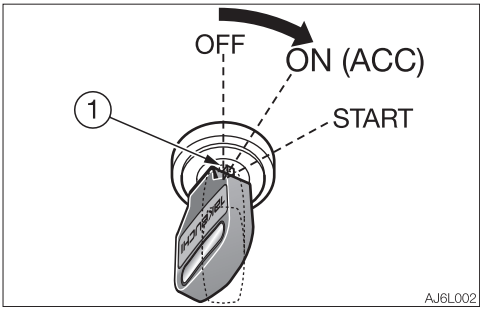

1. Insert the master key (1) into the starter switch and turn the key from the OFF to the ON (ACC) position.

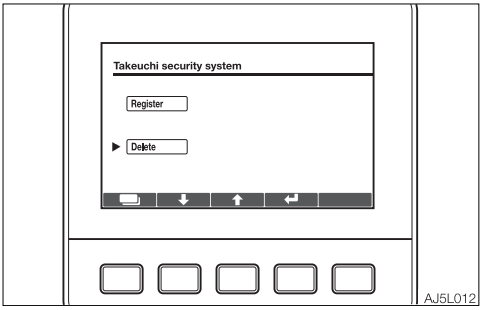

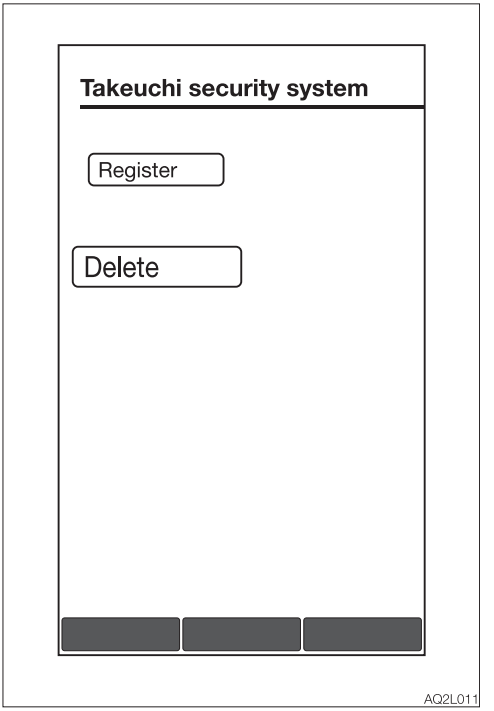

<Canopy>
2. On the LCD, select “Delete” and press (A).

<Cab>
2. Select “Delete”.

Touch operation
Tap the item to be selected.

Dial operation
Use the up/down of the dial to select the item, and then press the dial to confirm. (The selected item is displayed enlarged.)

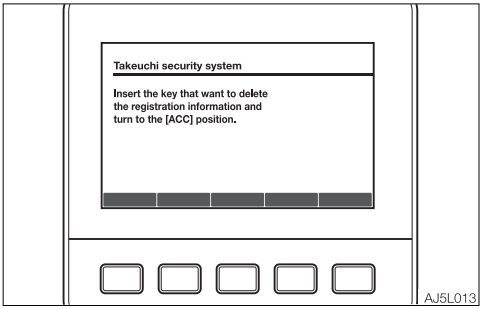

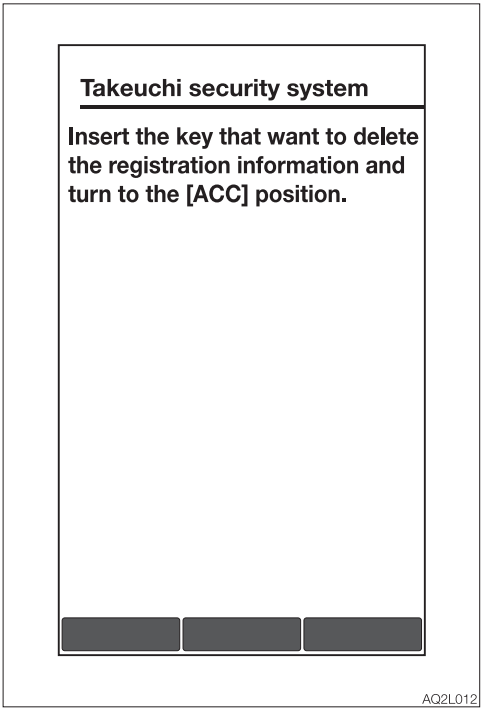

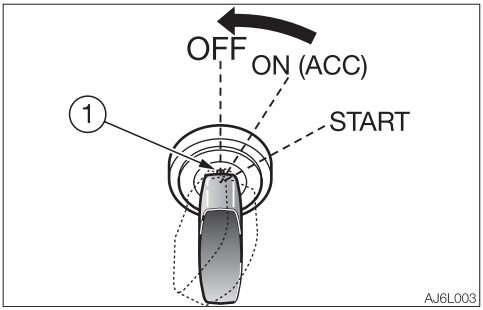

3. When the display shown as the illustration appears on the LCD, turn the master key (1) from the ON (ACC) to the OFF position, and then remove it from the starter switch.
   Note: If the registered key is lost and you want to delete all registration information, please refer to STEP 3 (A) on page 8-34.

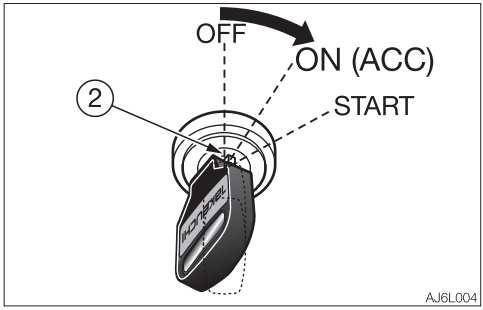

4. Insert the starter key (2) to be deleted into the starter switch and turn the key from the OFF to the ON (ACC) position.

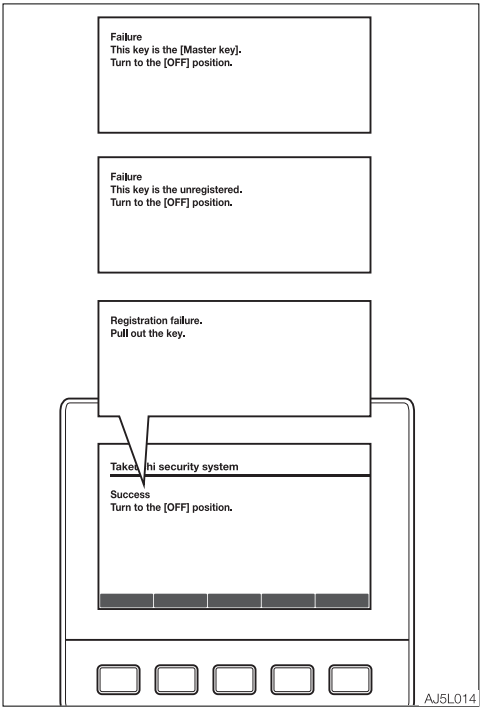

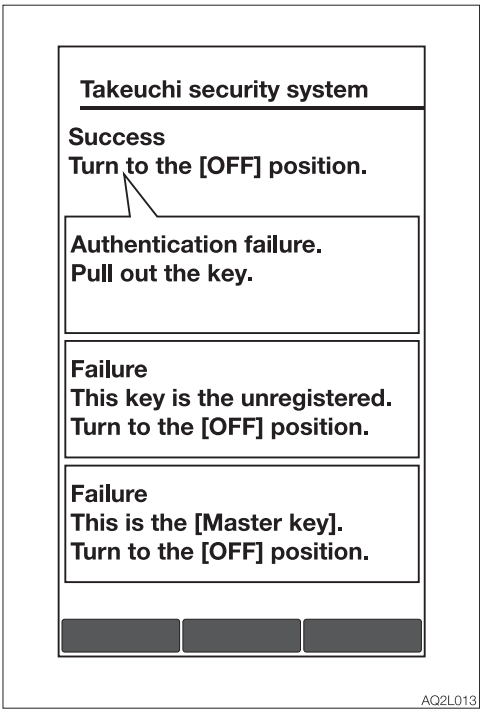

5. If the deletion is successful, the message “Success” appears. This means that the information registered for the starter key (2) currently inserted has been deleted. If the deletion fails, the message “Failure” or “Authentication failure” appears on the LCD. Remove the starter key, and then repeat the steps from Step 1 again.

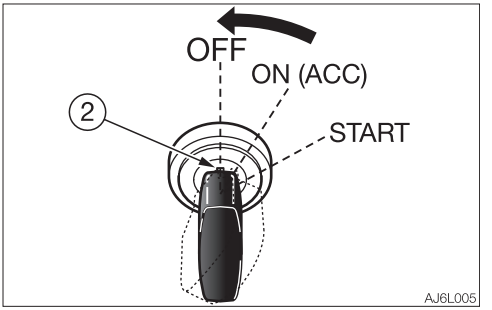

6. Turn the starter key (2) from the ON (ACC) to the OFF position, and then remove it from the starter switch.
   To continue deletion, repeat the steps from Step 1.

IF THE MASTER KEY IS LOST

If you lose your master key, contact your service or sales dealer for assistance.

COUNTRIES WHERE THE SYSTEM CAN BE USED

To use the Takeuchi Security System, “radio wave authentication” must be obtained in the country where the system is to be used. The system can be used in the countries listed below, as of January 2017. Do not use the system in other countries. For details on how to disable the system, please contact your service or sales dealer for assistance.

Countries where the system can be used:
Ireland, Italy, UK, Estonia, Austria, Holland, Cyprus, Greece, Croatia, Sweden, Spain, Slovakia, Slovenia, Czech, Denmark, Germany, Hungary, Finland, France, Bulgaria, Belgium, Poland, Portugal, Malta, Latvia, Lithuania, Rumania, Luxemburg, Iceland, Norway, Liechtenstein, Switzerland, Turkey

TAKEUCHI FLEET MANAGEMENT (TFM)

⚠ CAUTION

- **Never disassemble the TFM. It may cause injury or failure.**
- **Any damage to the TFM device or wire harness may cause damage to the device and surrounding equipment.**



- Takeuchi Fleet Management (TFM) is a system that manages machine position information, operation information, and machine status using a communication device installed in the machine.
- Machines that support TFM are equipped with communication devices and are labeled as above.
- A communication contract is required to use TFM. Please contact our sales service for information regarding the contract.

IMPORTANT: The TFM equipment has been tested and found to comply with the limits for a Class A and Class B digital device, pursuant to part 15 of the FCC Rules.
These limits are designed to provide reasonable protection against signal interference when the equipment is operated in a commercial environment. This equipment generates, uses, and can emit radio frequency energy and, if not installed and used in accordance with the instruction manual, may cause signal interference to radio communications.

IMPORTANT: Operation of this equipment in a residential area may cause signal interference in which the user may be required to take additional steps to correct the interference. To correct any interference issue, move the TFM equipped machine away from the affected device, or, if possible; relocate the affected device away from the TFM equipped machine.
IMPORTANT: The TFM device uses mobile communication. Therefore, it may not function properly in places where the signal is weak (buildings, tunnels, underground, etc.).
IMPORTANT: The TFM device complies with the RF radiation exposure limits of the FCC Rules. The product is tested for a separation distance of 0 mm from human bodies. It is advised for those with specific sensitive conditions to avoid close device-body exposure.
IMPORTANT: Please be aware that storing a machine long-term may result in the loss of communication from the TFM device if its internal battery is drained.
IMPORTANT: The TFM device consumes a small amount of machine battery power even when the key is in the OFF position. For extended storage, see “Maintenance during extended storage period” on page 5-83.

Specification

M7H (For Europe)

Frequency	Power
UMTS/HSPA:	
900 MHz	0.25 W
2100 MHz	0.25 W
GSM/GPRS:	
900 MHz	2 W
1800 MHz	1 W
GSM/EDGE:	
900 MHz	0.5 W
1800 MHz	0.4 W

M7L (For North America)

Frequency	Power
LTE Band:	
700 MHz	0.2 W
850 MHz	0.2 W
1700 MHz (AWS)	0.2 W
1900 MHz	0.2 W
UMTS Band:	
850 MHz	0.25 W
1900 MHz	0.25 W

M7MG

Frequency	Power
LTE Band:	
700 MHz	0.2 W
850 MHz	0.2 W
1700 MHz (AWS)	0.2 W
1900 MHz	0.2 W
UMTS Band:	
850 MHz	0.25 W
1900 MHz	0.25 W

LED LIGHTS

If the light fails to turn on after replacement, please contact your sales or service dealer for help.

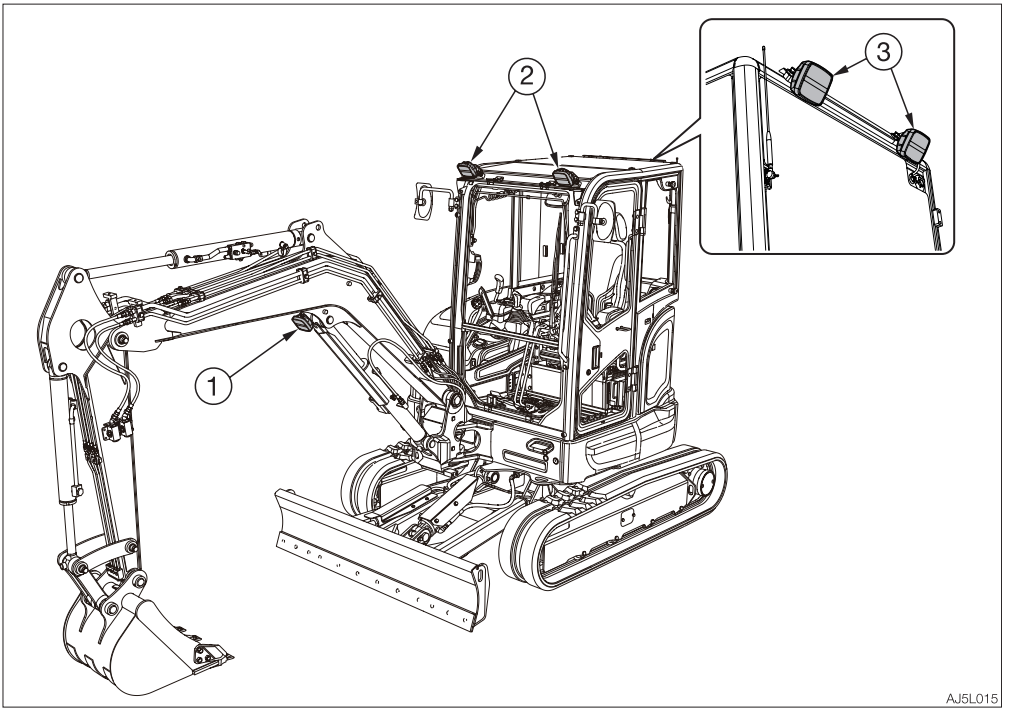

LED lights package 1
Consists of the boom light (1) and front light (2).
Note: The rear light (3) is not included in the LED lights package 1.

LED lights package 2
Consists of the boom light (1), front light (2) and rear light (3).
The light switch is also changed.

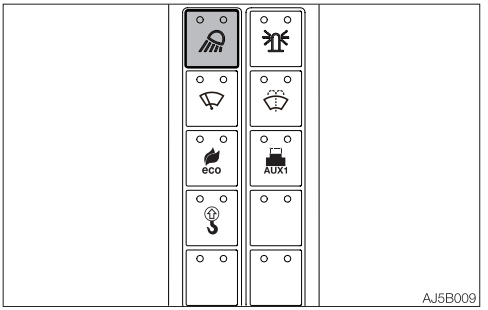



..... Off

..... The boom light (1), front light (2) and the switch lamp are turned on.

..... The boom light (1), front light (2), rear light (3) and the switch lamp are turned on.

First Published September 2021
Fifteenth Published December 2025

AJ5EN014

OPERATOR'S MANUAL

TB335R Mini excavator

Edited and issued by TAKEUCHI MFG. CO., LTD.

Printed in Japan by STATION M Co., Ltd.

ASAHI DENSO

6-2-1 Somejidai, Hamakita-ku, Hamamatsu, Shizuoka 434-0046, Japan

EU DECLARATION of CONFORMITY (DoC)

This declaration of conformity is issued under the sole responsibility of the manufacturer:

Name:	ASAHI DENSO CO.,LTD
Address:	6-2-1 Somejidai, Hamakita-ku, Hamamatsu, Shizuoka 434-0046, Japan

We declare that the DoC is issued under our sole responsibility and belongs to the following product.

Object of the declaration:

Product Name	PANEL SW
Model Name	CZ186
Accessories	N/A

The object of the declaration described above is in conformity with the relevant Union harmonization legislation:

Radio Equipment (RE) Directive (2014/53/EU)

The following harmonized standards and technical specifications have been applied:

Health & Safety (Article 3.1(a)):	EN 62368-1:2014 + A11: 2017
EMC (Article 3.1(b)):	EN 301 489-1 V2.2.3 EN 301 489-3 V2.1.1
Radio Spectrum (Article 3.2):	EN 300 330 V2.1.1

Signed for and on behalf of:

Shizuoka, Japan	June 1, 2021	Tomohiro Yaguchi
Place of Issue:	Date of Issue:	Tomohiro Yaguchi Manager Engineering Department

ASAHI DENSO

6-2-1 Somejidai, Hamakita-ku, Hamamatsu, Shizuoka 434-0046, Japan

UK DECLARATION of CONFORMITY (DoC)

This declaration of conformity is issued under the sole responsibility of the manufacturer:

Name:	ASAHI DENSO CO.,LTD
Address:	6-2-1 Somejidai, Hamakita-ku, Hamamatsu, Shizuoka 434-0046, Japan

We declare that the DoC is issued under our sole responsibility and belongs to the following product.

Object of the declaration:

Product Name	PANEL SW
Model Name	CZ186
Accessories	N/A

The object of the declaration described above is in conformity with the relevant statutory requirements:

STATUTORY INSTRUMENTS 2017 No. 1206 TELECOMMUNICATIONS (The Radio Equipment Regulations 2017)

The following designated standards and technical specifications have been applied:

Health & Safety (Regulation 6.1(a)):	EN 62368-1:2014 + A11: 2017
EMC (Regulation 6.1(b)):	EN 301 489-1 V2.2.3 EN 301 489-3 V2.1.1
Radio Spectrum (Regulation 6.2):	EN 300 330 V2.1.1

Signed for and on behalf of:

Shizuoka, Japan	June 1, 2021	Tomohiro Yaguchi
Place of Issue:	Date of Issue:	Tomohiro Yaguchi Manager Engineering Department

ZTR Control Systems, LLC

955 Green Valley Road
London, Ontario, N6N 1E4
Tel: 1-519-452-1233
FAX: 1-519-452-7764

www.ztr.com
info@ztr.com

April 5, 2019

RE: M7H

To whom it may concern,

This letter is to confirm that ZTR product **M7H** sufficiently demonstrate compliance to CE and the Radio Equipment Directives (RED). The M7H satisfies all the technical regulations applicable to the product within the scope of Council Directives 2014/53/EU, 2015/35/EU and 2014/30/EU. The following tests were completed successfully.

EN 60950-1: 2006+A11: 2009+A1: 2010+A12: 2011+A2: 2013
EN62311:2008
ETSI EN 300 328 V2.1.1 (2016-05)
ETSI EN 303 413 V1.1.1 (2017-06)
Draft ETSI EN 301 489-52 V1.1.0 (2016-11)
Draft ETSI EN 301 489-17 V3.2.0 (2017-03)
Draft ETSI EN 301 489-1 V2.2.0 (2017-03)
Draft ETSI EN 301 489-19 V2.1.0 (2017-03)
EN 55032: 2015
ETSI EN 301 511 V12.5.1 (2017-03)
ETSI EN 301 908-1 V11.1.1 (2016-07)
ETSI EN 301 908-2 V11.1.2 (2017-08)

(Title(s) of regulations, standards, etc.)

All essential radio test suites have been carried out.

The tests were carried out by a notarized 3rd party certification lab MiCOM Labs inc.

This Declaration of Conformity is issued under the sole responsibility of ZTR Control Systems (or the manufacturer).

Please direct any test results questions or concern to ZTR's Engineering Group for clarification.

Regards,

Brent Horne
Director of Product Development
ZTR Control Systems

Trackunit Aps
Gasvaerksvej 24 4.sal, 9000 Aalborg, Denmark
www.trackunit.com

EU declaration of conformity

Hereby, Trackunit Aps declares that the radio equipment type **Trackunit M7MG** complies with the essential requirements of Directive 2014/53/EU.

3.1 (a) protection of health and safety of persons and of domestic animals and the protection of property, including the objectives with respect to safety requirements set out in Directive 2014/35/EU

Standard used: EN 62368-1:2020+A11:2020
EN 62311:2020
EN 62133-2:2012

3.1 (b) adequate level of electromagnetic compatibility as set out in Directive 2014/30/EU

Standard used: EN 301 489-1 V2.2.3
EN 301 489-17 V3.2.4
EN 301 489-19 V2.2.0
EN 301 489-52 V1.2.1

3.2 the equipment is so constructed that it both effectively uses and supports the efficient use of radio spectrum in order to avoid harmful interference.

Spectrum used:	Bluetooth:	2,402 – 2,480 GHz,	Max. 10 dBm EIRP
	Positioning:	1,559 – 1,610 GHz,	Receive only
	Cellular 4G:	B1, B3, B5, B8, B20, B28,	Max. 27 dBm EIRP
	Cellular 2G:	GSM/GPRS/EDGE; 900 / 1800	Max. 33 dBm EIRP

Standard used: EN 300 328 V2.2.2
EN 303 413 V1.2.1
EN 301 511 V12.5.1
EN 301 908-1 V13.1.1
EN 301 908-13 V13.1.1

Complies with the essential requirements of Directive 2011/65/EU and Directive 2015/863/EU on the Restriction of use of certain Hazardous Substances (RoHS 3).

Complies with the essential requirements of the Regulation 1907/2006/EC regarding Registration, Evaluation, Authorization and Restriction of Chemicals (REACh).

Complies with Directive 2012/19/EU on Waste Electrical and Electronic Equipment (WEEE).

Signed for and on behalf of Trackunit Aps
Aalborg, 01 December 2022

DocuSigned by:
Søren Brogaard
DBFCD953D519425...

Søren Brogaard, CEO

Declaration of Conformity

We herewith declare that the following named machine, based on its conception and design, and in the form brought into service is in accordance with the relevant, basic safety and health requirements of the following EU directives. In case of any alteration of the machine not coordinated with us, this certificate loses its validity.

Designation of the machine	Compact Excavator
Manufacturer	TAKEUCHI MFG. CO., LTD 205 Uwadaira, Sakaki-machi, Hanishina-gun, Nagano 389-0605, Japan

Model	TB335R
Engine type	V1505-EF01e (e1*2016/1628*2022/992EV2/D*0010*Δ)
Engine performance	18.2 kW @ 2300 rpm

The machine is in accordance with the requirements of EU directives:

1) Machinery directive: 2006/42/EC and appendix
2) Electromagnetic Compatibility-Regulation 2014/30/EU and appendix.
3) Noise Directive 2000/14/EC (Evaluation procedure according to appendix VI), 2005/88/EC and appendices.
4) Regulations on engine emissions: (EU) 2016/1628, as last amended by Regulation 2022/992.

Harmonized norms: EN474-1:2022, EN474-5:2022

Compiler of the technical files:
Romain Loffredi
Takeuchi France S.A.S.
Parc d'Activités des Béthunes
3, avenue de la Mare 95310 SAINT OUEN L'AUMONE,
CS 29258 – SOA

Issued in Sakaki, Japan
Toshiya Takeuchi, President

Declaration of Conformity

We herewith declare that we take full responsibility that the following named machine, based on its conception and design, and in the form brought into service is compliant with the relevant, basic safety and health requirements of the following (UK) enactments. In case of any alteration of the machine not coordinated with us, this certificate loses its validity.

Designation of the machine	Compact Excavator
Manufacturer	TAKEUCHI MFG. CO., LTD 205 Uwadaira, Sakaki-machi, Hanishina-gun, Nagano 389-0605, Japan

Model	TB335R
Engine type	V1505-EF01e (e1*2016/1628*2022/992EV2/D*0010*Δ)
Engine performance	18.2 kW @ 2300 rpm

The machine is compliant with the following UK enactments:

1) Supply of Machinery (Safety) Regulations 2008 (S.I. 2008/1597)
2) Electromagnetic Compatibility Regulations 2016 (S.I. 2016/1091)
3) Noise Emission in the Environment by Equipment for use Outdoors Regulations 2001 (S.I. 2001/1701)

And the Designated Standards referred to and adopted therein and particularly EN474-1:2022, EN474-5:2022

Compiler of the technical files:
Daniel Bryning (Product Manager)
TAKEUCHI MFG. (UK) Ltd.
Unit E2B, John Boyd Dunlop Drive
Kingsway Business Park Rochdale OL16 4NG

Issued in Sakaki, Japan
Toshiya Takeuchi, President

 **WARNING:** Breathing diesel engine exhaust exposes you to chemicals known to the State of California to cause cancer and birth defects or other reproductive harm.

- Always start and operate the engine in a well-ventilated area.
- If in an enclosed area, vent the exhaust to the outside.
- Do not modify or tamper with the exhaust system.
- Do not idle the engine except as necessary.

For more information go to www.P65warnings.ca.gov/diesel.



WARNING:

Cancer and Reproductive Harm –
www.P65Warnings.ca.gov