OPERATOR'S MANUAL

Original instructions



Serial No. 150200007~

Book No.AJ6EN008

OENTB350R_B-XI

MINI EXCAVATOR

TAKEUCHI

WARNING Read and understand these instructions.
Failure to do so can cause injury or death.

03992-00029

SAFETY ALERT SYMBOL



This symbol represents the safety alert. The message that follows the symbol contains important information about safety.
Read and understand the message to avoid personal injury or death.

It is the owner or employer's responsibility to fully instruct each operator in the proper and safe operation of all equipment. All persons using this machine should thoroughly familiarize themselves with the contents of this manual.

All operators must be instructed on the proper functions of the excavator before running the machine.

Learn and practice correct use of the machine controls in a safe, clear area before operating this machine on a job site.

⚠ WARNING

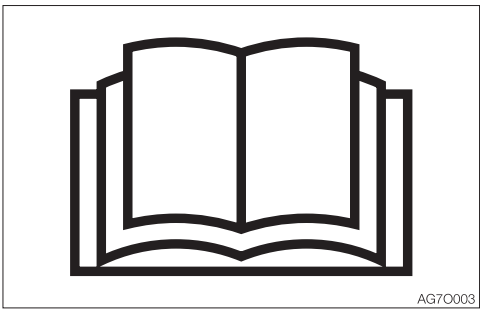

Improper operation, inspection and maintenance of this machine can cause injury or death.
Read and understand this manual before performing any operation, inspection or maintenance on this machine.

Always store this manual near at hand preferably on the machine itself. If it should be lost or damaged, immediately order a new one from your Takeuchi dealer.
When transferring ownership of this machine, be sure to hand this manual to the next owner.

Takeuchi supplies machines complying with the local regulations and standards of the country of export. If your machine has been purchased in another country or from a person or company of another country, it may not have the safety devices or safety standards required for use in your country. Should you have any question about whether your machine complies with the regulations and standards of your country, contact a Takeuchi dealer.

SIGNAL WORDS

Safety messages appearing in this manual and on machine decals are identified by the words “DANGER”, “WARNING” and “CAUTION”. These signal words mean the following:

⚠ DANGER

DANGER indicates a hazard with a high level of risk which, if not avoided, will result in death or serious injury.

⚠ WARNING

WARNING indicates a hazard with a medium level of risk which, if not avoided, could result in death or serious injury.

⚠ CAUTION

CAUTION indicates a hazard with a low level of risk which, if not avoided, could result in minor moderate injury.

IMPORTANT: The word IMPORTANT is used to alert operators and maintenance personnel about situations which could result in damage to the machine and its components.

It is impossible to foresee every possible circumstance that might involve a potential hazard. The warnings in this manual or on the machine can not cover all possible contingencies. You must exercise all due care and follow normal safety procedures when operating the machine so as to ensure that no damage occurs to the machine, its operators or other persons.

FOREWORD

This manual describes operation, inspection and maintenance of the machine, as well as safety instructions to be heeded during these operations.
If you have any questions about the machine, please contact a Takeuchi sales or service outlet.

- Some details in this manual may differ from those provided in the machine you are using.
- Please note that the information and specifications in this manual are subject to change without prior notice.

MANUAL STORAGE COMPARTMENT

A compartment for storing this manual is provided at the position shown on the diagram below.

Cab

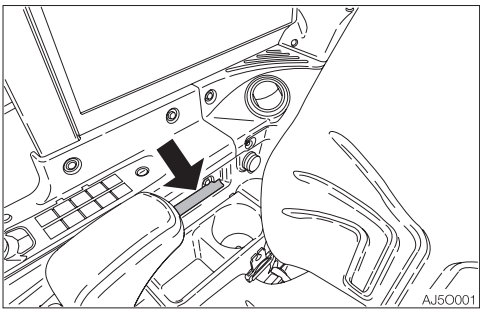

Canopy

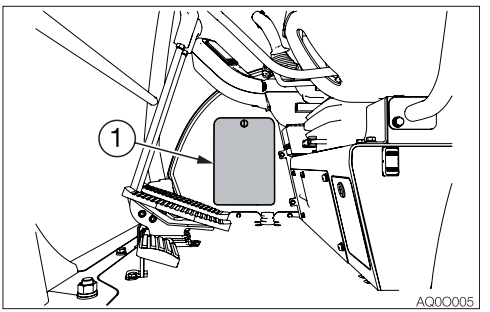

1. Insert the starter key and turn it counterclockwise to open the cover (1).
2. After using the manual, place it in the plastic pouch and store it back in the manual storage compartment.

SERIAL NUMBERS

IMPORTANT: Do not remove the machine name plate with the serial number. Check the serial numbers of the machine and engine and write them down in the spaces below.

Machine number:

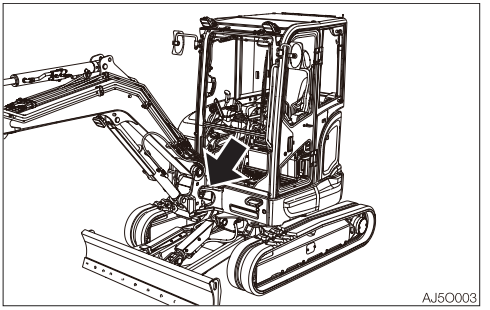

Engine number:

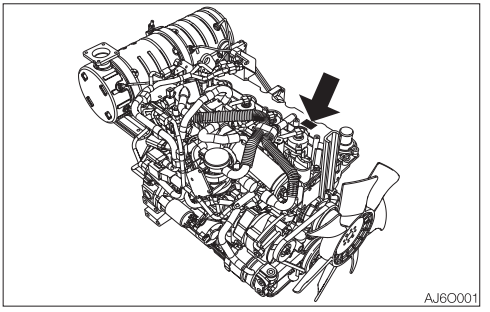

MACHINE DESCRIPTION

FRONT, REAR, LEFT AND RIGHT

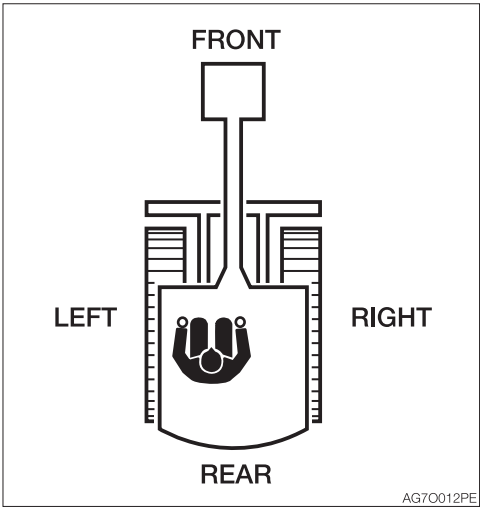

This manual refers the front, rear, left and right of the machine as seen when sitting in the operator's seat with the dozer blade visible to the front.

DESIGNATED OPERATIONS

Use this machine primarily for the following operations:
- Excavation
- Digging ditches
- Digging side ditches
- Leveling
- Loading

BREAK-IN PERIOD

When the machine is new, operate the machine for the first 100 hours (as indicated on the hour meter) by following the instructions below.
Using a new machine without a break-in period will lead to quicker deterioration of machine performance and may shorten the machine's service life.
- Sufficiently warm up the engine and hydraulic oil.
- Avoid heavy loads and rapid operations. Operate with a load of about 80% the maximum load.
- Do not abruptly start up, accelerate, change directions, or stop unless necessary.

NOTES ON READING THIS MANUAL

Please note that the descriptions and diagrams included in this manual may not be applicable to your machine.
The numbers used in the illustration are with circles around them. The same numbers appear between the parentheses in the text.
(Example: ① → (1))

Symbols used in this manual
The symbols used in this manual have the following meanings.
⃠, ✕ ..... Prohibited
..... Lock
..... Unlock

CONTENTS

Introduction 0-2

Machine description 0-4

Safety 1-1

General precautions 1-2
Precautions when preparing 1-8
Precautions when starting 1-12
Precautions when operating 1-15
Precautions when stopping 1-26
Precautions when transporting 1-27
Precautions on maintenance 1-29
Safety signs (decals) 1-41

Controls 2-1

Component names (Canopy) 2-2
Component names (Cab) 2-4
Covers 2-6
- Starter key 2-6
- Side cover 2-6
- Engine hood 2-7
- Fuel filler port 2-7
- Front cover 2-8

Cab 2-9
- Cab door 2-9
- Emergency exit 2-10
- Front window 2-10
- Lower front window 2-12
- Side window 2-12
- Sun visor (If applicable) 2-12
- Sun shade 2-13
- Emergency hammer (optional) 2-13

Seat and seat belt 2-14
- Seat 2-14
- Seat belt 2-16

Multi-information display (Cab) 2-17
- Opening 2-17
- Home screen 2-18
- Adjusting the display tilt angle 2-20
- Warning lamps 2-21
- Indicators 2-24
- Jog dial operation 2-30
- Touch operation 2-31
- Screen navigation 2-32
- Switching images 2-52

Multi-information display (Canopy) 2-54
- Home screen 2-54
- Warning lamps 2-55
- Indicators 2-58
- Screen control key 2-63
- Screen navigation 2-64
- Switching images 2-79

Switches 2-80
- Starter switch 2-80
- Engine shutdown switch 2-80
- Dial 2-81
- Horn button 2-81
- Deceleration button 2-82
- Travel speed button 2-82
- Auxiliary 1st switches 2-83
- Auxiliary 2nd/4th switch (If applicable) 2-84
- Third auxiliary hydraulic switch and button (If applicable) 2-85
- Auxiliary 2/4 select button (If applicable) 2-85
- DPF manual regeneration switch/DPF inhibit regeneration switch 2-86
- Light switch 2-88
- Wiper switch 2-88
- Washer switch 2-89
- ECO mode switch 2-89
- Detent mode switch (Auxiliary 1st) 2-90
- Lift overload warning switch 2-90
- Beacon lamp switch 2-91

Levers and Pedals 2-92
- Safety lock lever 2-92
- Operating levers 2-92
- Blade lever 2-93
- Travel levers/pedals 2-94
- Boom swing pedal 2-95

Accessories 2-96
- Air conditioner (If applicable) 2-96
- Heater 2-102
- Cup holder/small items storage 2-105
- Document storage compartment 2-105
- Interior light 2-105
- 12 V power socket 2-106
- External power sockets (If applicable) 2-106
- Mirrors 2-107
- Radio 2-108
- Auxiliary hydraulic lines (If applicable) 2-122

Operating the machine with an accumulator 2-129
Lifting safety device (If applicable) 2-130
Fuel supply pump (If applicable) 2-132
USB port (If applicable) 2-133
Engine auto stop 2-134
Armrests 2-135
Rear view camera (If applicable) 2-136

Operation 3-1

Before starting operation 3-2
Getting on or off the machine 3-2
Walk-around inspection 3-3
Daily inspection 3-3
Starting and stopping the engine 3-4
Before starting the engine 3-4
Starting the Engine 3-6
Warming up the engine 3-8
Stopping the engine 3-9
Operating the machine 3-10
Lever pattern (ISO pattern) 3-10
Lever pattern (G pattern) (If applicable) 3-11
Lever pattern (B pattern) (If applicable) 3-12
Warming up the machine (hydraulic oil) 3-14
Inspection after warm-up 3-17
Operating the travel levers/pedals 3-18
Stopping travel 3-21
Operating the working equipment 3-22
Operating procedures 3-24
Prohibited operations 3-24
Cautions on operating 3-28
Cautions on traveling on slopes 3-30
Getting out of mud 3-32
Operations possible with this machine 3-32
Parking the machine 3-34
Parking 3-34
Inspection and checks after stopping the engine 3-35
Handling in cold climates 3-36
Preparing for cold climates 3-36
Cautions after operations 3-36
After the cold climate 3-37
Handling rubber crawlers 3-38
Prohibitions 3-38
Cautions 3-40
Preventing the rubber crawlers from coming off 3-41
Handling the engine 3-43
Prohibitions 3-43
Cautions 3-43
Diesel fuel 3-43

Transport 4-1

Loading and unloading 4-2
Hoisting the machine 4-4
Securing the machine 4-6
Transporting posture 4-6

Maintenance 5-1

General 5-2
Maintenance overview 5-2
Cautions on maintenance 5-2
Service data 5-4
Fuel and lubricant table 5-4
Regularly replace the hydraulic oil 5-8
Hydraulic system specifications 5-8
List of consumables 5-9
List of tools (If applicable) 5-10
List of tightening torques 5-11
Safety-critical parts 5-12
Maintenance list 5-16
Walk-around inspection 5-20
Inspecting by opening the engine hood and covers 5-20
Inspecting by walking around the machine 5-21
Inspecting while sitting in the operator's seat 5-21
Daily inspection (every 10 hours) 5-22
Inspecting and replenishing the coolant 5-22
Inspecting and replenishing the engine oil 5-23
Inspecting the water separator 5-24
Inspecting the fuel level 5-25
Inspecting the hydraulic oil tank level and replenishing 5-26
Lubricating the working equipment 5-27
After the initial 50 hours (only for new machines) 5-28
Replacing the engine oil and the oil filter 5-28

Inspecting and adjusting the fan belt.. 5-30
Inspecting and adjusting the compressor belt (AC) 5-32
Every 50 hours 5-34
Inspecting and adjusting the crawler tension 5-34
Lubricating the slew bearing 5-36
Draining the water from the fuel tank.. 5-37
Inspecting the battery 5-38
After the initial 250 hours (only for new machines)..... 5-39
Replacing the hydraulic oil return filter 5-39
Replacing the pilot line filter..... 5-40
Replacing the travel motor gear oil..... 5-41
Every 250 hours 5-42
Inspecting and adjusting the fan belt.. 5-42
Inspecting and adjusting the compressor belt (AC) 5-42
Inspecting the air-intake line..... 5-42
Cleaning the air cleaner 5-43
Cleaning the radiator fins and the oil cooler fins..... 5-45
Cleaning the air filters (AC)..... 5-46
Cleaning the condenser (AC) 5-47
Inspecting the refrigerant (gas) level (AC) 5-48
Every 500 hours 5-50
Replacing the engine oil and the oil filter 5-50
Replacing the fuel filter..... 5-50
Replacing the water separator filter.... 5-51
Inspecting the slew pinion gear..... 5-52
Replacing the fan belt 5-53
Cleaning the water jacket (inside the radiator) 5-53
Every 1000 hours 5-54
Replacing the hydraulic oil return filter 5-54
Replacing the pilot line filter..... 5-54
Replacing the travel motor gear oil..... 5-54
Replacing the air breather filter..... 5-55
Inspecting and adjusting the engine valve clearance..... 5-55
Replacing the air cleaner element 5-56
Every 1500 hours 5-57
Replacing the oil separator element ... 5-57
Inspecting the injector tip..... 5-58
Inspecting the EGR cooler 5-58
Inspecting the PCV valve 5-58
Every 2000 hours 5-59
Cleaning the engine cooling system... 5-59
Inspecting the accumulator..... 5-62
Every 3000 hours 5-64
Inspecting the turbocharger 5-64
Inspecting the EGR system..... 5-64
Every 4000 hours 5-65
Replacing the hydraulic oil and cleaning the suction strainer 5-65
Every 6000 hours 5-69
Cleaning the DPF..... 5-69
When required 5-70
Replacing the bucket teeth and the side cutters..... 5-70
Replacing the bucket..... 5-73
Adjusting the gap between the bucket and arm (If applicable)..... 5-76
Inspecting and replenishing the windshield washer fluid 5-78
Draining the water from the water separator..... 5-78
Lubricating the levers and pedals..... 5-79
Inspecting the rubber crawlers..... 5-80
Replacing the rubber crawlers 5-81
Every year..... 5-83
Inspecting the DPF differential pressure pipe and hose..... 5-83
Inspecting the EGR piping 5-83
Inspecting the air-intake line..... 5-83
Inspecting the exhaust manifold..... 5-83
Inspecting the exhaust heating catalyst (EHC) and exhaust throttle valve 5-83
Every 2 years..... 5-84
Replacing the receiver dryer..... 5-84
Replacing the fuel pipes and clamp bands..... 5-84
Replacing the air intake line 5-84
Replacing the oil separator related rubber piping 5-84
Replacing the EGR cooler rubber piping 5-84
Replacing the water rubber piping 5-84
Replacing the boost sensor pressure rubber piping 5-84
Maintenance during extended storage period..... 5-85

Troubleshooting 6-1

Symptoms that are not malfunctions 6-2
If the engine overheats..... 6-3
If the battery goes dead..... 6-4
If a fuse blows 6-6
Inspecting and replacing the fuse..... 6-6
Inspecting the slow blow fuse 6-10
Restarting after adding fuel 6-11
Bleeding air from the fuel system 6-11
If a warning lamp flashes 6-12
Vehicle error code list..... 6-16
Engine error code list 6-18
Other symptoms..... 6-24
Lowering the boom to the ground 6-28
Towing..... 6-30
If the cab or canopy is damaged 6-31
Exhaust gas control system error..... 6-32
Error code list 6-32
NOx control diagnostic system (NCD) 6-33
Particulate control diagnostic system (PCD)..... 6-33
Limiting the engine output..... 6-34

Specifications 7-1

Basic Specifications..... 7-2
Machine dimensions..... 7-4
Operating ranges..... 7-6
Lifting Capacities 7-8

Options 8-1

General precautions 8-2
Safety precautions..... 8-2
Cautions when installing attachments .. 8-2
Cautions when operating attachments. 8-3
Attachment combination table 8-4
Precautions on the location of the auxiliary line..... 8-4
Selecting a lever pattern 8-6
Selecting a lever pattern (A-G) 8-6
Switching the lever pattern 8-6
Selecting a lever pattern (A-B)..... 8-7
Switching the lever pattern 8-7
Hydraulic breaker 8-8
Cautions on operating 8-8
Replacing the hydraulic oil regularly ... 8-10
Travel alarm 8-12
Optional equipment mass..... 8-16
Biodegradable oil..... 8-17
Replacing the mineral oil with biodegradable oil 8-17
Cab options..... 8-19
Angle dozer blade 8-20
Specifications 8-22
Operating lever switch kit 1..... 8-24
Horn button..... 8-24
Deceleration button 8-24
Travel speed button 8-25
Auxiliary 1st switches..... 8-26
Auxiliary 2nd/4th switch 8-27
Auxiliary 2/4 select button..... 8-28
Takeuchi Security System 8-30
Starter key 8-30
Starting the engine..... 8-31
Registering and deleting the starter key 8-32
If the master key is lost 8-43
Countries where the system can be used 8-43
Takeuchi Fleet Management (TFM)..... 8-44
LED lights 8-46

REVISION HISTORY

When checking the revision history, refer to the book code (1) on the cover page.

Example:
O EN TB216_E-X b

- Revision history (A to Z, a to z)
- Model code
- Language
- Type
  - O: Operator's Manual
  - W: Workshop Manual

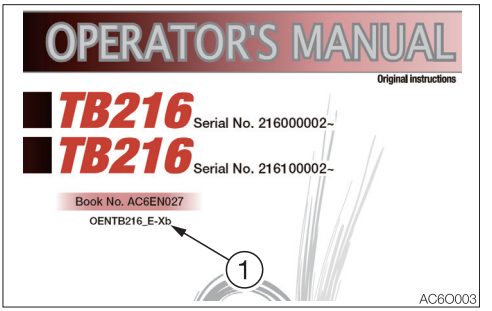

Revision history	Date	Description	Importance
D	12/2023	Changed:	
		Takeuchi Fleet Management (TFM)..... 8-42	High
E	05/2024	Changed:	
		Precautions on maintenance 1-29	High
		Radio..... 2-108	High
		Declaration of Conformity 8-51	High
F	08/2024	Changed:	
		Precautions when preparing 1-8	High
		Safety signs (decals) 1-41	High
		Cab 2-9	High
		Hoisting the machine 4-4	High
		Securing the machine 4-6	High
		Service data 5-4	High
		Basic Specifications..... 7-2	High
		Declaration of Conformity 8-51	High
G	01/2025	Changed:	
		Operating the machine 3-10	High
		Selecting a lever pattern 8-6	High
H	04/2025	Changed:	
		Lifting Capacities 7-8	High
I	11/2025	Changed:	
		Service data 5-4	High

SAFETY



GENERAL PRECAUTIONS

It is your responsibility to observe all pertinent laws and regulations and to follow the manufacture's instructions on machine operation, inspection and maintenance.

Virtually all accidents occur as the result of a failure to observe basic safety rules and precautions.
Most accidents can be prevented by identifying the potentially hazardous situations beforehand.
Read and understand all safety messages which describe how to prevent accidents.
Do not operate the machine until you are sure that you have gained a proper understanding of its operation, inspection and maintenance.

Observe all safety rules

- Operation, inspection and maintenance of this machine must be performed only by a trained and qualified person.
- All rules, regulations, precautions and safety procedures must be understood and followed when performing operation, inspection and maintenance of this machine.
- Do not perform any operation, inspection or maintenance of this machine when under the influence of alcohol, drugs, medication, overwork or lack of sleep.

When a problem is found on the machine

If any problem (noise, vibration, smell, disorder of instrument, smoke, oil leak, wrong indication of alarm or unusual indication in the multi-information display, etc.) is detected during the operation or inspection and maintenance of the machine, immediately inform your sales or service dealer and take proper actions. Do not operate the machine until the trouble is cleared.

Operating temperature range

To maintain the performance of machine and to prevent it from early wear, observe the following operating conditions.

- Do not operate the machine if the ambient temperature is higher than +45°C (+113°F) or lower than –15°C (+5°F).
  - If operated at an ambient temperature of higher than +45°C (+113°F), the engine may overheat and cause the engine oil to degrade. Also, the hydraulic oil may become very hot, causing damage to the hydraulic equipment.
  - If operated at an ambient temperature of lower than –15°C (+5°F), the parts made of rubber such as gaskets may get hardened and cause early wear or damage to the machine.
  - If the machine is to be used outside the ambient temperature range described above, consult your sales or a service dealer.

Wear appropriate clothing and protective equipment

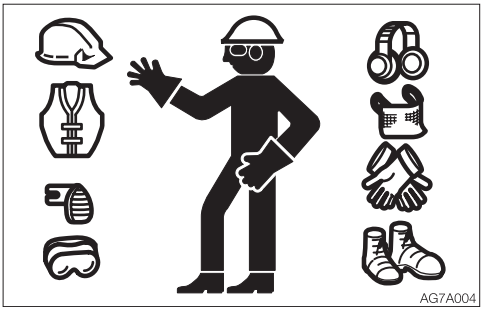

- Do not wear loose clothing or any accessory that can catch on controls or in moving parts.
- Do not wear oily or fuel stained clothing that can easily catch fire.
- Wear a hard hat, safety shoes, safety glasses, filter mask, heavy gloves, ear protection and other protective equipment as required by job conditions. Wear required appropriate equipment such as safety glasses and filter mask when using grinders, hammers or compressed air, as metal fragments or other objects can fly and cause serious injury.
- Use hearing protection when operating the machine. Loud prolonged noise can cause hearing impairments, even the total loss of hearing.

Install a fire extinguisher and first aid kit

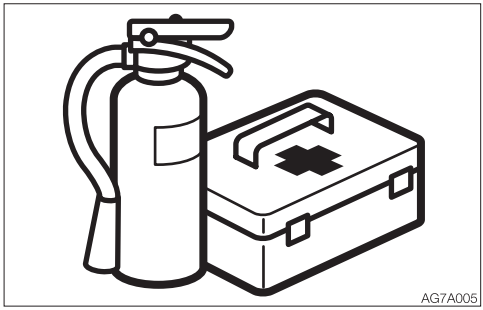

Be prepared for fire and accidents

- Install an extinguisher and a first aid kit, and learn how to use them.
- Lean how to fight a fire and how to deal with accidents.
- Know how to contact emergency assistance and make a list of emergency contacts.

Never remove safety equipment

- Make sure all protective guards, covers and doors are in place and secured. Repair or replace damaged parts before operating the machine.
- Know how to use the safety lock lever, seat belt and other safety equipment and use them properly.
- Never remove any safety equipment except for servicing. Keep all safety equipment in good operating condition.

Use a signal person and a flag person

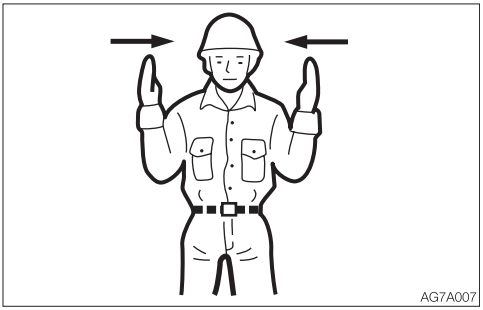

Learn how to use the hand signals required for particular jobs and make sure who has the responsibility for signaling.

- All personnel must fully understand all the signals.
- The operator must respond to signals only from the appointed signal person, but must obey a stop signal at any time from anyone.
- The signal person must stand in a clearly visible location when giving signals.

Cautions when standing up from or leaving the operator's seat

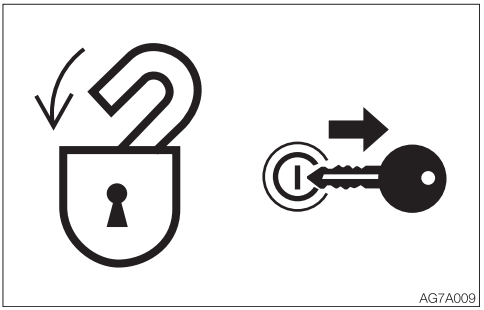

- Before standing up from the operator's seat to open/close the window or remove/install the lower window, lower the working equipment to the ground, raise the safety lock lever to engage the lock and stop the engine. If any controls should be accidentally touched when the safety lock lever is lowered (unlocked), the machine will suddenly move and cause serious injury or death.
- Be careful not to touch the operating levers when raising or lowering the safety lock lever.
- Before leaving the operator's seat, lower the working equipment to the ground, raise the safety lock lever to engage the lock and stop the engine. Also, be sure to remove the key, lock the door and covers, take it with you and store it in a specified place.

Avoid fire and explosion hazards



Keep flames away from fuel, oil, grease and antifreeze. Fuel is particularly flammable and dangerous.

- When handling these combustible materials, keep lit cigarettes, matches, lighters and other flames or sources of flames away.
- Do not smoke or permit open flames while handling fuel or working on the fuel system.
- Do not leave the location while refilling with fuel or oil.
- Never remove the fuel filler cap or add fuel when the engine is running or still hot. Also, do not spill the fuel on the hot surface of the machine or the component of the electric system.
- Clean up spilled fuel or oil immediately.
- Check for fuel, oil leak. Stop all leaks and clean the machine before operating.
- When operating with grinder or welding, move inflammables to a safe place.
- Do not cut or weld on pipes or tubes that contain flammable fluids. Clean thoroughly with nonflammable solvent before cutting or welding.
- Remove all trash or debris from the machine. Make sure that oily rags or other flammable material are not stored on the machine.
- Handle all solvents and dry chemicals (foam type fire extinguisher) according to procedures identified on manufacturer's containers. Work in a well-ventilated area.
- Never use fuel for cleaning purposes. Always use a nonflammable solvent.
- When handling the fuel, washing oil or paint, open the door and windows to ventilate thoroughly.
- Store all flammable fluids and materials in a safe and well-ventilated place.
- The short circuit of the electric system may cause the fire. Check for any loosened connections or damage to the wires every day. Retighten the loosened connector and wire clamp. Fix or change the damaged wire.
- Fire from the pipes:
  Make sure that the clamps, guards and cushions of the hoses and tubes are securely fixed. If not, hoses or tubes may be damaged due to vibration or contact with other parts during operation. This can cause the high-pressure oil to spurt out, resulting in the fire or injury.
- Do not perform the DPF regeneration if the machine is surrounded by flammable items such as plants, trees, dry grass, wastepaper, oil and waste tires. There is a risk of fire due to the high-temperature exhaust gas emitted from the DPF.
  DPF: Diesel Particulate Filter

Exhaust fumes from the engine are poisonous

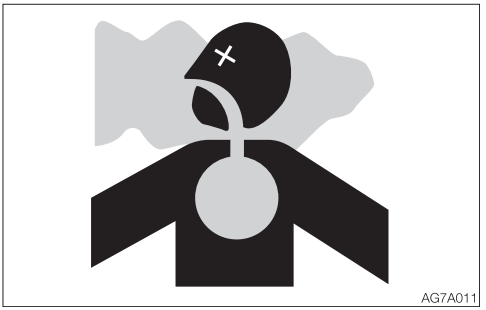

- Do not operate the engine in an enclosed area without adequate ventilation.
- If natural ventilation is not possible, install ventilators, fans, exhaust extension pipes or other venting devices.
- Do not perform the DPF regeneration in poorly-ventilated indoor spaces, as smoke could be generated during the DPF regeneration or carbon monoxide poisoning could result.

Handling asbestos dust

Inhaling asbestos dust can cause lung cancer. When handling the materials which may contain asbestos, take the following precautions:

- Never use compressed air for cleaning.
- Avoid brushing or grinding parts containing asbestos.
- For clean up, use a vacuum equipped with a high efficiency particulate air filter (HEPA).
- Wear the stipulated respirator if there is no other way to control the dust. When working indoors, install a ventilation system with a macromolecular filter.
- Do not allow unauthorized personnel in the work area while working.
- Follow the rules and environmental standard applicable to the work area.

Be careful not to get crushed or cut



Never put your hands, feet or other parts of your body between the upperstructure and the undercarriage or tracks, between the machine body and working equipment, or between a cylinder and moving part. The sizes of these gaps change when the machine moves, and a person can suffer severe injury or death.

Using optional products

- Consult with Takeuchi before installing optional attachments. Depending on the type of attachments or the combination of them, the attachment may come into contact with the operator's compartment or the other parts of the machine. Make sure that the optional attachment installed is not contacted with other parts before use.
- Do not use attachments that have not been approved by Takeuchi. Doing so may compromise safety or adversely affect the machine's operation or service life.
- Takeuchi will not be held responsible for any injuries, accidents or damage to its products caused by the use by a non-approved attachment.

Never modify the machine

Unauthorized modifications to this machine can cause injury or death. Never make unauthorized modifications to any part of this machine.
If you modify or alter the configuration of the machine in a way which results in a restriction of the operator's field of vision, a new risk assessment will need to be performed. If this becomes necessary, contact your Takeuchi service or sales dealer.

PRECAUTIONS WHEN PREPARING

Know the work area

Before starting operation, know the working area condition to ensure safe operation.

- Inspect the topography and ground condition of the working area, or the structure of the building when working indoors, and take the safety precautions as necessary.
- Be sure to avoid all hazards and obstructions such as ditches, underground lines, trees, cliffs, overhead electrical wires, or places where there is a danger of falling rocks or slides.

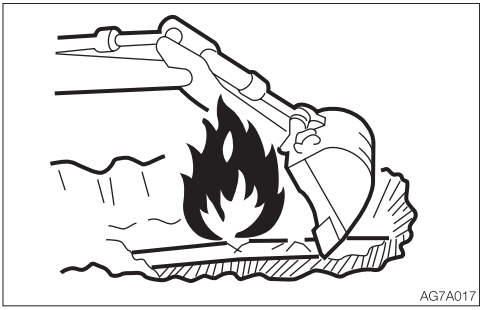
AG7A017

- Check with the administrator for the locations of buried gas pipes, water pipes and power cables. If necessary, determine what specific precautions must be taken to insure safety by consulting with the administrator.
- When working on roads, be sure to consider the safety of pedestrians and vehicles.
  - Use a flag person and/or a signal.
  - Fence off the working area and keep off unauthorized persons.
- When working in water or crossing shallow streams or creeks, check the depth of the water, the solidity of the ground and the water flow speed beforehand.
  Refer to “Cautions on operating” for further instructions.


AN3B036

- Do not perform the DPF regeneration if the machine is surrounded by flammable items such as plants, trees, dry grass, wastepaper, oil and waste tires. There is a risk of fire due to the high-temperature exhaust gas emitted from the DPF.
  DPF: Diesel Particulate Filter
- The DPF may automatically perform the regeneration while the engine is left running. Make sure that there are no flammable items around the DPF and the exhaust line, and also that the engine hood is closed to prevent fire. Be careful not to burn yourself on the high-temperature exhaust gas.
- Do not perform the DPF regeneration in poorly-ventilated indoor spaces, as smoke could be generated during the DPF regeneration or carbon monoxide poisoning could result.

Check the strength of the bridge

When traveling over a bridge or a structure, check the permissible load. If the strength is insufficient, reinforce the bridge or the structure.

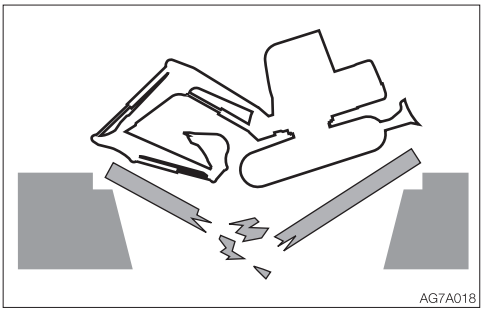
AG7A018

Always keep the machine clean

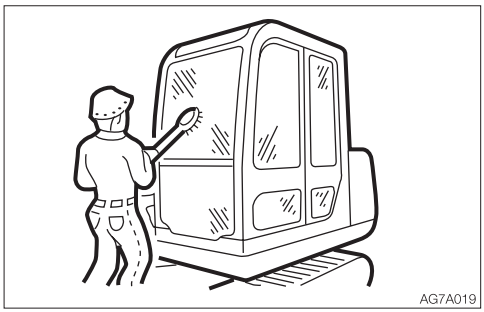
AG7A019

- Wipe off any oil, grease, mud, snow or ice, to prevent accidents due to slipping.
- Remove all loose objects and unnecessary devices from the machine.
- Remove any dirt, oil or grease from the engine area to prevent fires.
- Clean around the operator's seat and remove any unnecessary object from the machine.

Perform inspection and maintenance every day

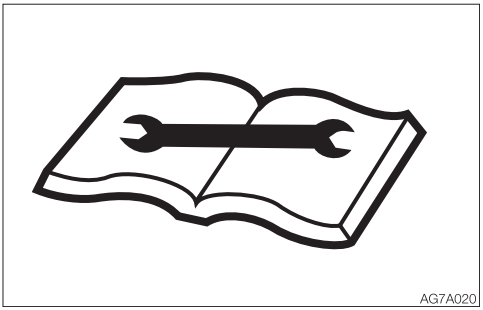

Failure to identify or repair the irregularities or damage on machine can lead to accidents.

- Before operating, perform the specified inspection and make prompt repairs where necessary.
- If a failure occurs and the operation becomes impossible or the engine fails, immediately stop the machine by following the shutdown procedure, and keep machine securely parked until the malfunction is corrected.

Cautions in the operator's compartment

- Remove mud and grease from shoe soles before entering the operator's compartment. Pedaling the machine with the shoes with mud and grease will cause a slip accident.
- Do not leave the parts or tools around the operator's seat.
- Do not leave any plastic bottles in the operator's compartment or attach any suction cups on the window glass. The plastic bottle or suction cup act as a lens and can cause fire.
- Do not use the mobile phone during traveling or working.
- Do not bring combustibles or explosives into the operator's compartment.
- Do not leave the cigarette lighter in the operator's compartment. When the temperature rises, the lighter may explore.

Emergency exit

Front window (excluding machines with a front guard)

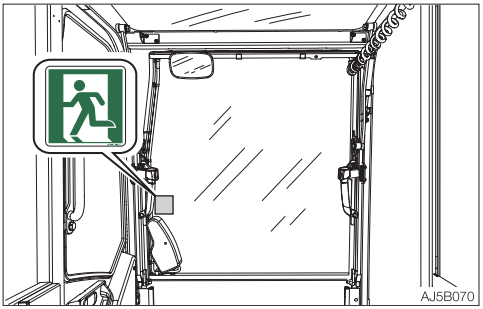

If you should become trapped inside the cab, open the front window to get out.

Emergency hammer (optional)

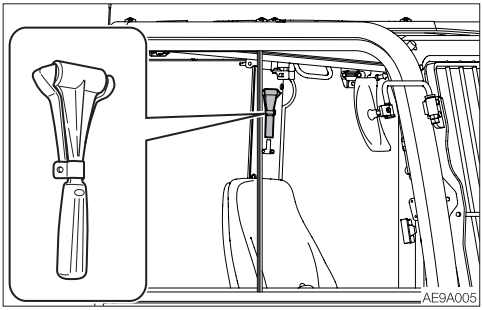

An emergency hammer is installed to be used to escape from the cab in an emergency. When escaping, break the windows with the hammer.

- When breaking the window pane with a hammer, take great care not to injure yourself with the broken glass pieces.
- Remove the glass pieces from the window sill so as not to cut yourself when evacuating. Broken glass will fall from the window, so be careful of your footing and do not slip on the glass.

PRECAUTIONS WHEN STARTING

Support your weight in a three point secure stance when getting on/off the machine

- Do not jump on or down from the machine. Never attempt to get on or off the moving machine.
- When getting on or off the cab, first fully open the door to the locked position and check that it does not move (for machines with cab).



- Climb up/down the steps facing the machine and holding the handrail to support your weight in a three point secure stance (hand and feet).
- Never use the safety lock lever or control levers as hand holds.

Before starting the machine, ask any unauthorized personnel to leave the area

Do not start the engine until you are sure it is safe to start the machine by checking the following items.

- Walk around the machine and warn the person who is servicing the machine or is walking near the machine. Do not start the machine until you are certain that no one is around the machine.



- Check if there is a “DO NOT OPERATE” alert sign or similar sign is on the cab door, controls or starter switch. If there is one, do not start the engine or touch any levers.
- Sound the horn to warn people around the machine.

Sit in the operator's seat and start the engine

- Adjust the seat to securely latch it.

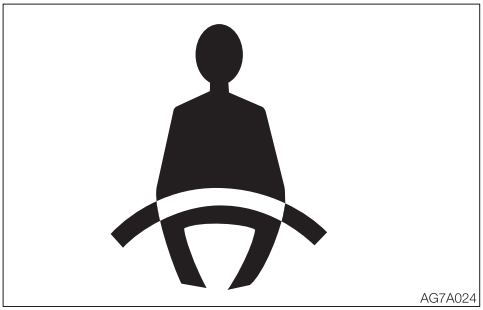
AG7A024

- Fasten the seat belt.
- Check if the parking brake is on and all control levers and pedals are in the neutral position.
- Check if the safety lock lever is in the lock position.
- Make sure that no one is near the machine.
- Start and operate the machine only from the operator's seat.
- Never attempt to start the engine by shorting across the starter terminals.

Starting with jumper cables

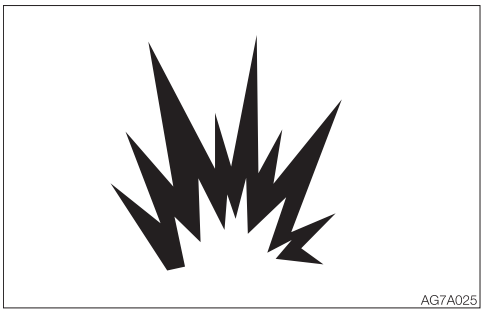
AG7A025

Use jumper cables only in the recommended manner. Improper use of jumper cables can result in battery explosion or unexpected machine motion.
Refer to "If the battery goes dead" for further instructions.

After starting the engine

After starting the engine, perform the operations and checks described below in a safe place with no persons or obstacles in the area. If any malfunction is found, follow the shutdown procedure and report the malfunction.

- Warm up the engine and hydraulic oil.
- Check if all gauges and warning devices are properly working.
- Check for any noises.
- Test the engine speed control.
- Operate each control to ensure they are properly working.

In cold climates

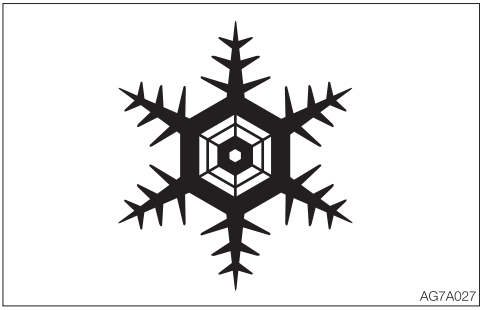

- Be careful of slippery conditions on freezing ground, steps and hand holds.
- In severe cold climates, do not touch any metal parts of the machine with bare hands. The skin will freeze to the metal, resulting in severe injury.
- Do not use ether or starting fluid on this engine. The starting fluids can cause explosion and serious injury or death.
- Warm up the engine and hydraulic oil. If the levers are operated without warming, the machine will not react or move promptly or properly, resulting in accident.

PRECAUTIONS WHEN OPERATING

Ensure good visibility

Check the field of view before operating the machine.

- When working in dark places, turn on the machine's working lights and headlights and additional lighting equipment installed, as necessary.
- When visibility is poor due to bad weather (fog, snow, rain or a cloud of dust), stop operating the machine and wait until visibility improves.
- Clean the windows, mirrors, lights and camera to ensure good visibility. Adjust the mirror and camera to the best positions so that the operator can see the rear view (blind spots) from the operator's seat.
- Unauthorized machine modifications or installation of unapproved attachments could impair the visibility. The operator's field of view must conform to ISO 5006.

Do not permit riders on the machine



Do not allow anyone to ride on any part of the machine at any time while traveling or operating.

Check if the work area is safe and secure before operation

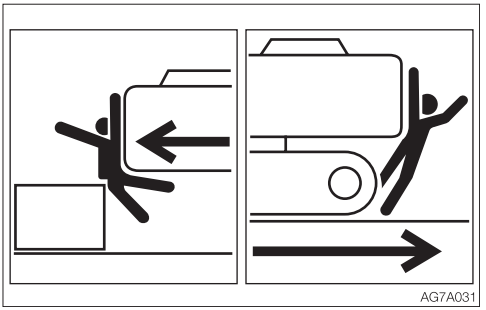
AG7A031

- Confirm the performance limits of the machine.
- Use a signal person at road shoulders, narrow places or where your vision is obstructed.
- Never allow anyone to enter the machine's slewing radius and path.
- Signal your intention to move by sounding the horn.
- There is a blind spot in the rear of the machine. Before traveling in reverse, check that the area is safe and clear.

Safety precautions when performing the DPF regeneration

The DPF may automatically perform the regeneration while the engine is left running. Make sure that there are no flammable items around the DPF and the exhaust line, and also that the engine hood is closed to prevent fire. Be careful not to burn yourself on the high-temperature exhaust gas.
DPF: Diesel Particulate Filter

Check the position of the undercarriage (tracks) before traveling

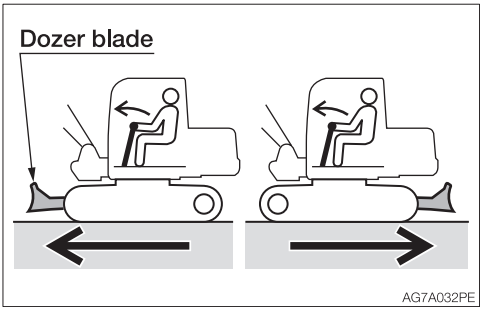

AG7A032PE

Before operating the travel levers/pedals, make sure that the dozer blade is to the front of the operator's seat. Remember that when the dozer blade is to the rear of the operator's seat, the travel levers/pedals must be operated in the reverse direction from when it is to the front.

Travel safely

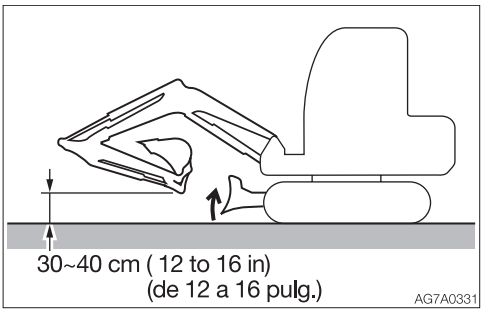

- Travel with the dozer blade raised, the hoe attachment folded as shown on the figure above, and the bucket raised 30 to 40 cm (12 to 16 in.) above the ground.
- Do not slew while traveling. If you must operate the hoe attachment while traveling, operate at speeds slow enough so you have complete control at all times.
- When a load greater than a set value is applied during traveling in 2nd (high) speed, the speed will automatically slow down to 1st (low) speed. When the load becomes lighter, the speed will increase and return to 2nd (high) speed. It should be noted that the travel speed changes depending on the load condition (for machines with the automatic travel shift-down system).
- When traveling on the uneven road or sharp slope, turn off the auto-deceleration switch. If the machine is operated on such roads with the switch turned on, the engine speed may increase, causing the machine speed to suddenly increase (machines with the auto-deceleration switch).

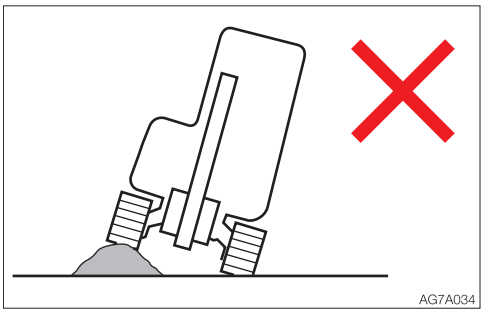

- Avoid crossing over obstacles whenever possible. If you must do so, keep the hoe attachment close to the ground level and travel slowly. Never cross obstacles which will tilt the machine to an angle of 10° or greater.
- On uneven ground, maintain the low speed and avoid starting, stopping or changing directions abruptly. Otherwise, the working equipment may come in contact with the ground, causing the machine to lose its balance and get damaged or to damage the structures in the surrounding area.

Cautions on traveling on slopes

When traveling on slopes or grades, be careful that the machine does not tip (roll) over or slide.

- Never travel on slopes that are too steep for the machine to maintain its stability (maximum gradeability: 30°, lateral tipping angle: 15°). Note that in reality, the machine's stability becomes lower than the above values depending on the working condition.

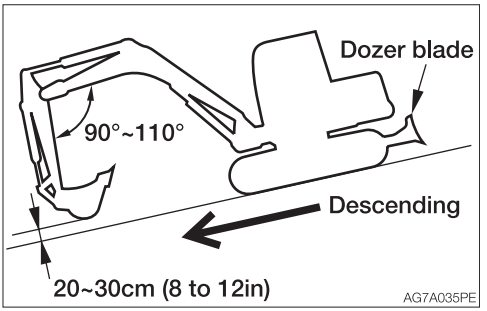

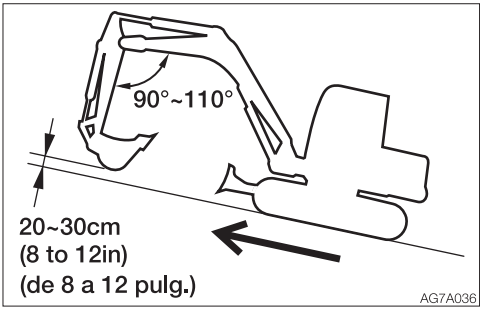

- When climbing a hill, keep the operator's seat facing the hillside. When descending a hill, keep the operator's seat facing the downhill direction. In either case, travel must be done while paying attention to the ground in front of the machine.
- When traveling on slopes, lower the bucket to a height of 20 to 30 cm (8 to 12 in.) above the ground. When climbing a steep slope, extend the hoe attachment to the front. In emergencies, lower the bucket to the ground and stop the machine.
- When traveling on slopes or grades, drive slowly in 1st (low) speed. When descending a slope, slow down the engine speed.
- Do not descend slopes in reverse.

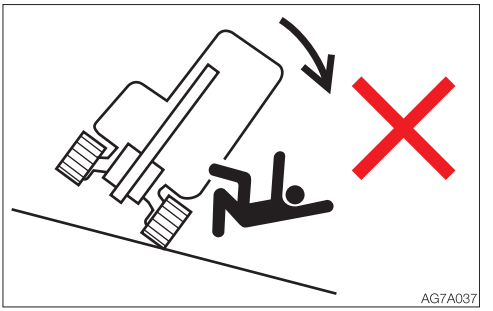

- Do not change directions on slopes or traverse slopes. First return to a flat surface, and then take an alternative path.
- The machine may slip sideways even on a slight slope if the ground is covered with grass or dead leaves, or when traveling on a wet metal plate or frozen surfaces. Make sure the machine is never positioned sideways on slopes.
- If the machine is stalled on the slope, return each operating lever to the neutral position before restarting the engine.

Operate the machine on snow or ice with extra care

- When traveling on snow or on frozen surfaces, drive at a low speed and avoid starting, stopping or changing directions abruptly.
- In the snowy area, the road shoulder and objects placed beside the road are buried in the snow and cannot be seen. There is a hazard of the machine tipping over or hitting covered objects, so always carry out operations carefully.
- If the machine enters deep snow, there is a hazard that it may tip over or become buried in the snow.
  Be careful not to drive beyond the road shoulder or to get trapped in a snow drift.
- With frozen ground surfaces, the ground becomes soft when the temperature rises, and this may cause the machine to tip over, resulting in an operator trapped inside the machine.
- When parking the machine on an unstable ground, lower the dozer blade.

Do not move the bucket over the heads of people

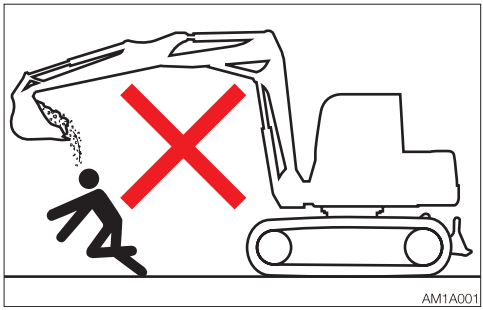

Moving the bucket over the heads of people entails the danger of the load spilling or the sudden dropping of the bucket.

Ensure driver's safety when loading

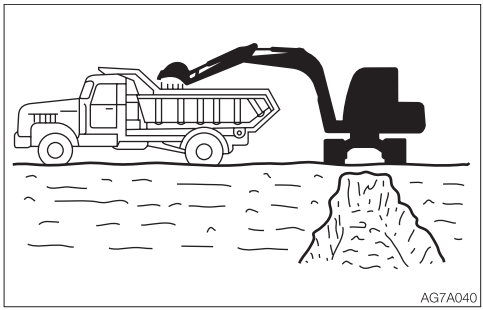

Do not load a truck unless the truck driver is in a safe place.

- Never swing or position the bucket over a person or the cab room.
- Load the truck from the rear.

Keep a safe distance from the overhead high-voltage cables

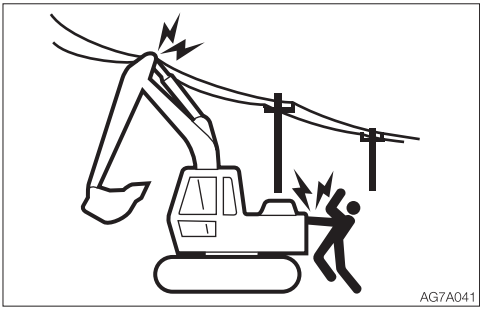
AG7A041

Never bring any part of the machine or loaded material to near to the high voltage cables unless all safety precautions required by the local and national authorities have been installed. If a person comes near to the machine that is discharging sparks or located near to or in contact with the power source, there is a hazard of electric shock and death.

- Always maintain a safe distance between the machine and the high-voltage electric cable.
- Check with the local power company about safe operating procedure before starting operations.
- Consider all cables to be high-voltage cables and treat all cables as energized even though it is known or believed that the power is shut off and the cables are visibly grounded.
- Use a signal person to give warning if the machine approaches too close to the high-voltage electric cables.
- Caution all personnel in the work area not to come close to the machine or the loaded material.

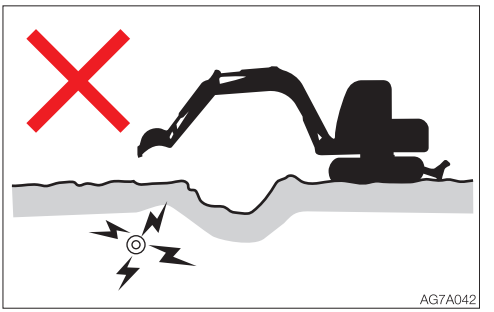
AG7A042

- Pay also careful attention to the high-voltage electric cables buried underground.

Watch out for hazardous working conditions

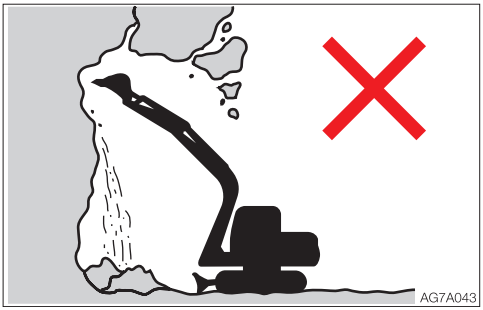

- Never undercut a high bank. Doing so is dangerous as it may cause ground collapse.
- Do not operate in places where there is a danger of falling rocks.

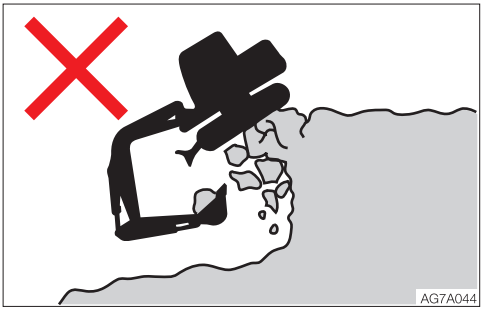

- Maintain a safe distance between the machine and the edge of the digging site. Do not dig the ground under the front of the machine.
- When working close to the cliffs or road shoulders, to make it easier to escape if there is any problem, set the crawlers at right angles to the cliff or road shoulder and the dozer blade to the front when carrying out operations.

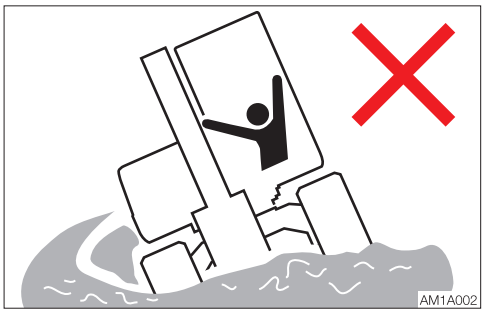

- Do not enter areas where there is soft ground. Doing so could cause the machine to tilt under its own weight, resulting in a machine tipping over or sinking into the ground.

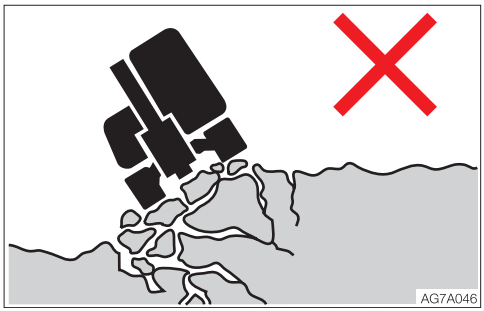

- Do not come close to unstable grounds (cliffs, road shoulders, deep ditches). If the ground should collapse under the weight or vibration of the machine, there is a hazard that the machine may fall or tip over.
  - Remember that the soil after heavy rain or blasting is weak.
  - The ground of top of the embankment and of the circumferences of the excavated ditches are also weak.

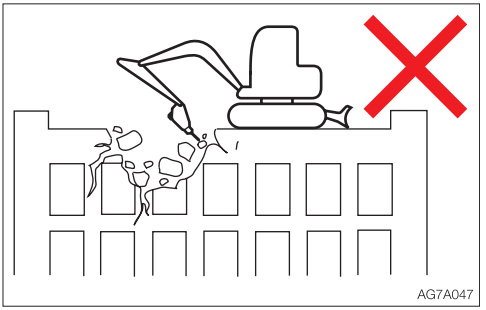

- Do not perform demolition work under the machine. There is a hazard that the machine may fall down, because the ground becomes unstable.
- When working on or from the top of buildings or other structures, check the strength and the structure before starting operations. If a building or structure collapses, serious injury or damage will result.

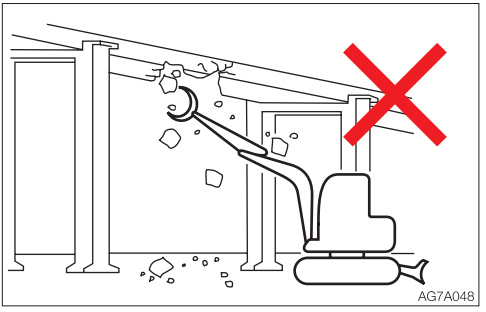

- When doing demolition work, do not perform demolition above your head. There is a hazard of broken parts falling or of the building collapsing and causing serious injury or damage.

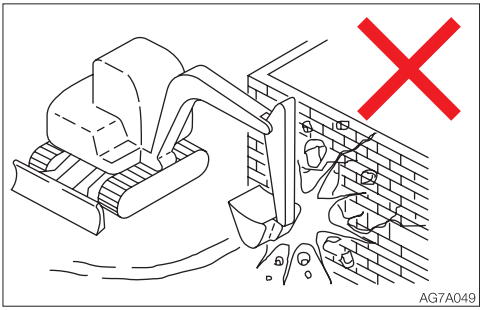

- Do not use the impact force of the hoe attachment for breaking work. There is a hazard of serious injury being caused by flying pieces of broken materials and by the damaged hoe attachment.

Be careful with flying objects

This machine is not equipped with protective equipment to protect the operator from flying objects. Do not use this machine in places where there are risks of the operator being hit by flying objects.

Operating on slopes is dangerous

When operating on slopes or grades, slewing or operation of working equipment may cause the machine to lose stability and tip over. Avoid operating on slopes whenever possible.

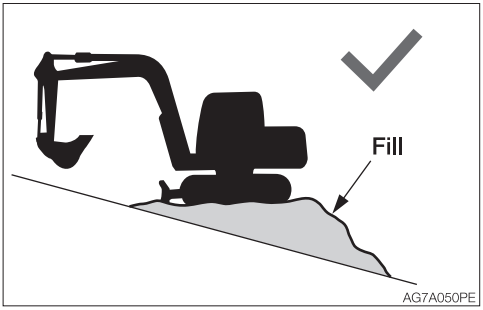

- Level off the work area.

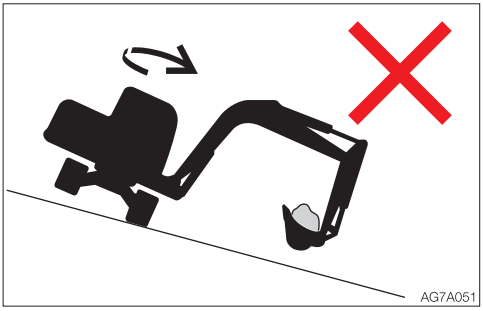

- Avoid slewing to the downhill direction with the bucket full of loaded material. This will reduce the stability of the machine and may result in tipping over.

Never slew (swing) sideways with a heavy load

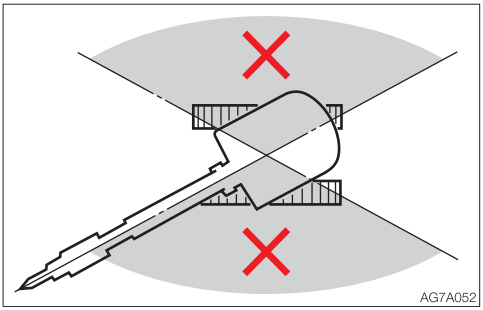

The machine can tip over more easily in the lateral direction than in the longitudinal direction.

- Do not slew (swing) sideways with a heavy load at the tip of the hoe attachment. In particular, do not slew (swing) sideways on slopes.
- The tip of the attachment is heavier for machines equipped with breakers, crushers or long arms than for machines equipped with the standard bucket. For such machines with heavier tips, do not perform excavation with the digging arm (boom) facing the downhill direction or operate toward sideways.

Be careful with the overhead objects

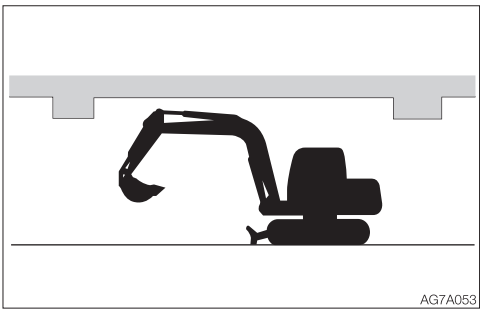

When operating under bridges, in tunnels, near electric cables or indoors, be careful not to let the boom or arm hit overhead objects.

Cautions when lifting loads

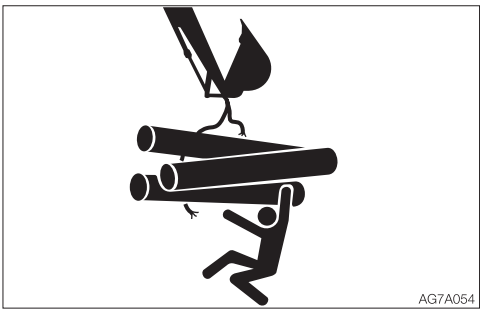

If the machine is used for lifting, it must be equipped with an emergency shut-off valve on the arm and the boom, respectively. Extreme caution should be paid if the excavator is used for lifting.

- Never lift loads in excess of capacity. Overload will cause the machine to roll and can result in serious injury or death.
- All rated lift capacities are determined by using a machine placed on a stable and flat ground. For a safe lifting work, the user is expected to make due allowance for the particular job conditions. They include, soft or uneven ground, non-level condition, side loads, dynamic or jerked loads, hazardous conditions, and experience of personnel. The operator and other personnel should fully acquaint themselves with the operator's manual before operating this machine, and rules for safe operation of equipment shall be adhered to at all times.
- The bucket linkage or lifting device may fail if chains or lifting device are incorrectly attached, resulting in serious injury or death.
- Do not attempt to pull stumps out of the ground when using the machine as a crane. The loads imposed on the machine under this use are completely unknown.
- Do not allow anyone to stand on or under the lifted loads or come close to the work area.

Cautions when towing

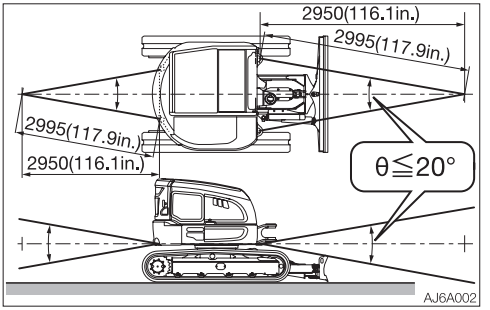

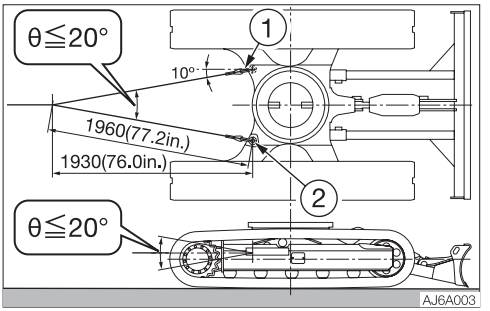

When towing, serious injury or death could result, if performed incorrectly or the wire rope being used is inappropriate or not properly inspected.

- Do not tow using only a towing hole on one side.
- It becomes dangerous if the wire rope breaks or becomes disengaged. Use a wire rope appropriate for the required tractive force.
- Do not use a wire rope that is kinked, twisted or otherwise damaged.
- Do not apply heavy loads abruptly to the wire rope.
- Wear safety gloves when handling the wire rope.
- Make sure there is an operator on the machine being towed as well as on the machine that is towing.
- Never tow on slopes.
- Do not let anyone come near to the wire rope while towing.

Refer to “Towing” for further instructions.

PRECAUTIONS WHEN STOPPING

Park safely

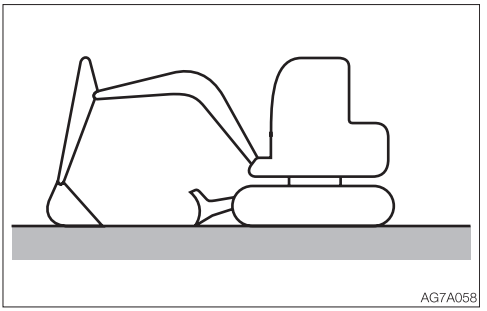

- Park the machine on a flat, rigid and safe ground. Set the parking brake.

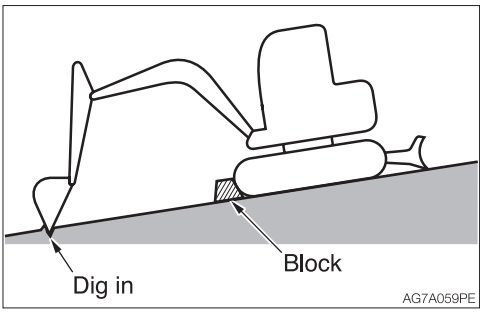

If you must park on a slope or incline, park the machine securely and block the movement of the machine.

- When parking on a street, use barriers, caution signs, lights, etc., so that the machine can easily be seen even at night to avoid collision with other vehicles.

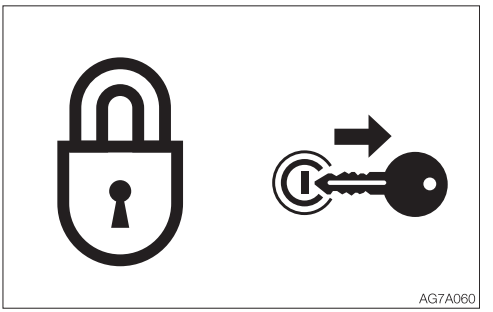

- Before leaving the machine, do the followings:
  1. Lower the bucket and the dozer blade to the ground.
  2. Raise the safety lock lever to the locked position.
  3. Stop the engine and remove the starter key.
  4. Lock the cab and covers and take the key with you.

PRECAUTIONS WHEN TRANSPORTING

Load/unload the machine safely

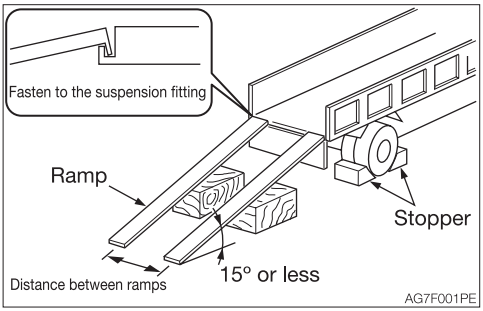

The machine may roll or tip over or fall while being loaded or unloaded. Take the following precautions:

- Select a firm, level surface and keep sufficient distance from road shoulders.
- Secure the ramps of adequate strength and size to the truck bed. The slope of the ramps must not exceed 15°. If the rumps are bowed down too low, support them with poles or blocks.
- Never use the working equipment to load or unload the machine. Doing so may result in tipping over or falling down of the machine.
- Keep the truck bed and loading ramps clean of oil, soil, ice, snow, and other materials to prevent the machine from sliding sideways. Clean the crawlers.
- Chock the transporter wheels to prevent movement.
- Turn off the deceleration switch and auto-deceleration switch. Otherwise, the engine speed may suddenly increase to cause troubles.
- When being loaded or unloaded, travel slowly in 1st (low) gear by following the signal from the signal person.
- Never change courses on the ramps.
- Do not slew/swing on the ramps. The machine may tip over.
- When slewing/swinging on the truck bed, do it slowly as the footing should be unstable.
- Lock the cab door after being loaded, if applicable. Otherwise, the door may open during transport.
- Chock the tracks and secure the machine to the truck bed with wire rope or chain.

Hoist the machine safely

- Know and use correct crane signals.
- Check the hoisting equipment for damaged or missing parts on a daily basis and replace as necessary.
- When hoisting, use a wire rope capable of lifting the machine mass.
- Hoist the machine in such a manner described in the procedure below. Do not do it in any other manner, as it may result in the machine losing its balance.
  Refer to “Hoisting the machine” for further instructions.
- Do not hoist the machine with an operator on it.
- When hoisting, hoist slowly so that the machine does not tip.
- Keep everyone out of the area when hoisting. Do not move the machine over the heads of the persons.

Transport the machine safely

- Know and follow the applicable safety rules, vehicle code and traffic laws when transporting the machine.
- Select the best transport route by considering the length, width, height and weight of the truck with the machine loaded on it.
- Never abruptly start or stop or run at a high speed at the sharp curves during transport. Doing so will move or lose the balance of the loaded machine.

PRECAUTIONS ON MAINTENANCE

Display a “DO NOT OPERATE” alert sign

Severe injury could result if an unauthorized person should start the engine or touch controls during inspection or maintenance.

- Before performing maintenance, stop the engine, remove the key and take it with you.



- Display a “DO NOT OPERATE” alert sign on easy-to-see locations such as on the starter switch or on control levers.

Use the correct tools

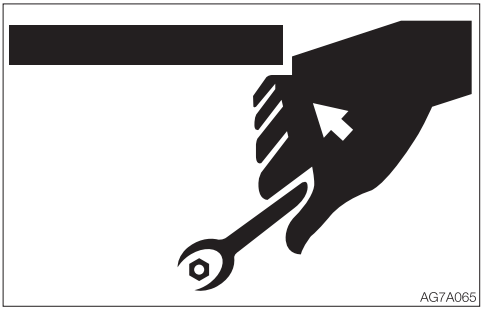

Do not use damaged or weakened tools or tools designed for other purposes. Use tools appropriate for the work involved.

Replace safety-critical parts periodically

- Replace fuel hoses periodically. Fuel hoses wear out over time, even if they do not show any symptom of wear.
- Regardless of the replacement schedule, replace immediately if a symptom of wear is found.
  Refer to “List of safety-critical parts” for further details.

Explosionproof lighting



To prevent an ignition or explosion, use explosion-proof lights when inspecting fuel, oil, coolant or battery fluid. Otherwise, explosion could result causing serious injury or death.

Prohibit access by unauthorized persons

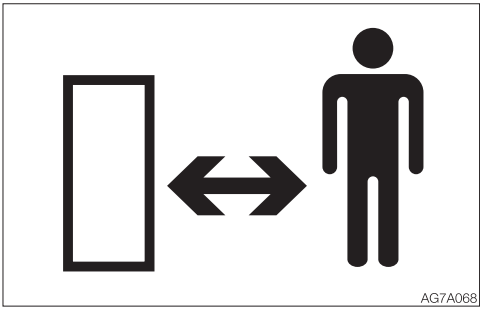

Do not allow unauthorized personnel in the work area while working. Be careful when grinding, welding or using a hammer. You could be injured by flying debris from the machine.

Prepare work area

- Select a firm, level work area. Make sure there is adequate light and, if indoors, ventilation.
- Clear obstacles and dangerous objects. Eliminate slippery areas.

Always keep the machine clean

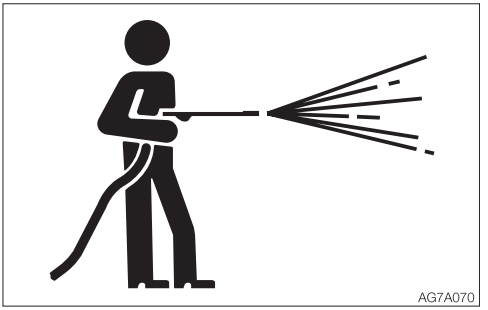

- Clean the machine before performing maintenance.
- Stop the engine before washing the machine. Cover the electrical parts so that water cannot enter. Water on electrical parts could cause short-circuits or malfunctions. Do not use water or steam to wash the battery, electronic control components, sensors, connectors or the operator's compartment.

Stop the engine before performing maintenance

- Avoid lubrication or mechanical adjustments while the machine is moving or while the engine is running when the machine is not moving.
- If maintenance must be performed with the engine running, always work as a two person team communicating each other.
  - One person must sit in the operator's seat so that he/she can immediately stop the engine when necessary. He/she must take care not to touch the lever or pedal unless necessary.
  - The one who performs maintenance must make sure to keep his/her body or clothing away from the moving part of the machine.

Stay clear of the moving parts

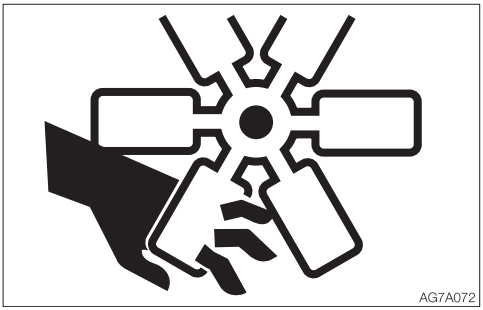
AG7A072

- Stay clear of all rotating and moving parts. If a hand or tool becomes trapped in the rotating or moving part, serious injury or death could result.
- If a tool or other objects is dropped or inserted in the fan or fan belt, it will be flown or cut in pieces. Do not drop or insert anything in the fan or fan belt.

Firmly secure the machine or any component that may fall


AG7A073

- Before performing maintenance or repairs under the machine, lower all moveable working equipment to the ground or in the lowermost position.
- Chock the tracks.
- If you must work beneath the raised machine or equipment, always use wood blocks, jack-stands or other rigid and stable supports. Never get under the machine or working equipment if they are not sufficiently supported. This procedure is especially important when working on hydraulic cylinders.

Secure the working equipment

To prevent unexpected movement, firmly secure the working equipment when repairing or replacing the bucket teeth or side cutter.

Secure the engine hood or cover when opened

Be sure to secure the engine hood or cover before working the inside. Do not keep the hood or cover open on a windy day or if the machine is parked on a slope.

Place heavy objects in a stable position



When it is necessary to temporarily place a heavy object or an attachment on the ground during removal or installation, be sure to place it in a stable position. Keep unauthorized persons from the storage place for such object.

Cautions when refueling



- Do not smoke or permit open flames while fueling or near fueling operations.
- Never remove the fuel filler cap or add fuel when the engine is running or still hot. Do not spill fuel on the hot surface of the machine.
- Fill the fuel tank in a well ventilated place.
- Do not fill the fuel tank to capacity. Allow room for oil expansion.
- Clean up spilled fuel immediately.
- Securely tighten the fuel filler cap. If the fuel filler cap is lost, replace it only with the genuine cap. Use of a non-approved cap without proper venting may result in pressurization of the tank.
- Never use fuel for cleaning.
- Use the correct grade of fuel for the operating season.

Handling of hoses

Oil leak or fuel leak can cause a fire.
- Do not twist, bend or hit the hoses.
- Never use twisted, bent or cracked pipes, tubes or hoses; otherwise, they may burst.
- Retighten loose connection.

Be careful with hot and pressurized components

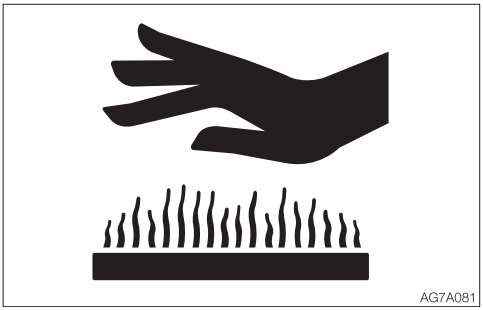
AG7A081

Stop the engine and allow the machine to cool down before performing maintenance.
- The engine, muffler, radiator, hydraulic lines, sliding parts and many other parts of the machine are hot immediately after the engine is stopped. Touching these parts will cause burns.
- The engine coolant, hydraulic oil and other oils are also hot and under high pressure. Be careful not to touch the hydraulic oil when loosening the cap or plug. Working on the machine under these conditions could result in burns or injuries due to the hot oil spurting out.
- The DPF and the exhaust gas emitted from the exhaust line can be very hot while the engine is running or the regeneration is under way, as well as immediately after the engine is stopped. Be careful not to accidentally touch them; doing so could cause burns.

Be careful with hot cooling systems

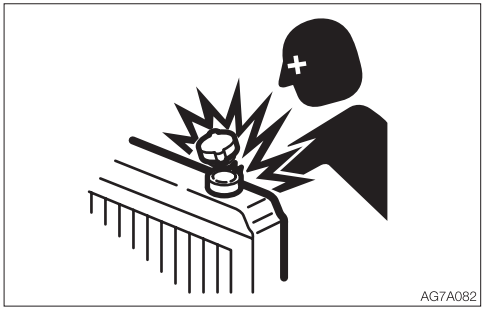
AG7A082

Do not remove the radiator cap or the drain plug when the cooling water is hot. Stop the engine and wait until the engine and the cooling water cool. Then, slowly loosen the radiator cap to release the internal pressure and remove it.

Be careful with oil internal pressure

Pressure is maintained in the hydraulic circuit long after the engine has been shut down.
- Completely relieve the internal pressure before performing maintenance work.

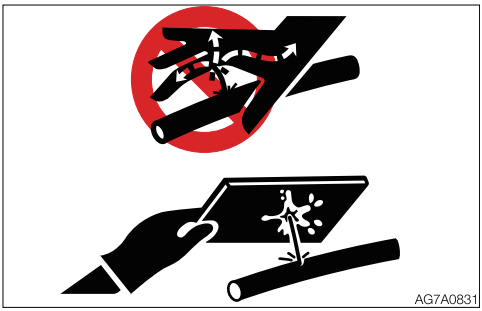

- The high-pressure hydraulic oil can penetrate the skin or eyes and cause serious injury, blindness or death. Remember that the hydraulic oil escaping from a small hole is almost invisible. When checking for leaks, wear protective goggle and thick gloves. Use cardboard instead of your hands to check for leaks. If oil penetrates the skin, it must be surgically removed within a few hours by a doctor familiar with this type of injury.

Release pressure before working on the hydraulic system

Oil may spurt out if caps or filters are removed or pipes are disconnected before releasing the pressure in the hydraulic system.
- Immediately after the engine is stopped, and while the safety lock lever is still in the unlock position, turn the starter switch to ON and move all the control levers and pedals several times all the way in each direction to release the pressure from the working equipment circuitry.
- Press the air breather button to relieve the internal pressure from the tank.
- When removing plugs or screws, or when disconnecting hoses, stand to the side and loosen them slowly to gradually release the internal pressure before removing.
- Oil or plug may spurt out according to the pressure in the travel motor case. Loosen the plug slowly and release the internal pressure.

Be careful with debris when the hammer is being used

When using a hammer, pins may fly out or metal particles may be scattered. This may lead to serious injury.
- If hard metal parts such as pins, bucket teeth, side cutter or bearings are hit with a hammer, wear protective gear such as safety goggles and gloves.
- When hitting pins or bucket teeth, always check that there is no one in the surrounding area.

Be careful with the high-pressure grease



In the track adjuster, the grease has been injected under high pressure. If the tension is adjusted without following the prescribed procedure, the grease discharge valve may fly off, resulting in injury.

- Never loosen the grease fitting.
- Loosen the grease discharge valve slowly. Do not turn it more than one turn.
- Do not put your face, arms, legs or body in front of the grease discharge valve.
- If grease does not come out when the grease discharge valve is loosened, the valve is faulty. Ask a Takeuchi service agent for repair.

Never disassemble the track adjuster

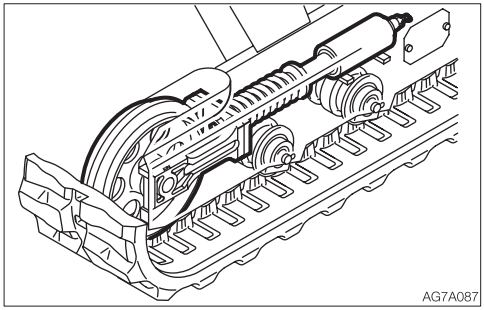

There is a very strong spring contained in the track adjuster. If the track adjuster is accidentally disassembled, the spring can pop out, resulting in serious injury Never disassemble the track adjuster.

Cautions when servicing the air conditioner

If the refrigerant comes in contact with eyes, it damages your eyesight. If the refrigerant comes in contact with skin, it may cause frostbite. Never touch the refrigerant.

Handling of the accumulator



Be sure to handle the high-pressure nitrogen gas enclosed in the accumulator with care. If handled incorrectly, it could explode and cause serious injury. Strictly observe the following precautions:

- Do not disassemble.
- Do not allow flame near or throw it into a fire.
- Do not drill, weld or fuse.
- Do not subject it to physical shock such as hitting, rolling or dropping.
- Before disposing of the unit, the sealed gas must be drained. Contact a Takeuchi service agent for help.

Disconnect the battery wiring



Disconnect the battery wiring before working on the electrical system or doing electric welding. Disconnect the negative (–) battery cable first. When reconnecting, connect the negative (–) battery cable last.

Use caution when handling batteries

- Do not allow persons (such as children) to come into contact with the product unless they fully understand the handling methods and risks.
- Batteries contain sulfuric acid which will damage the eyes or skin in case of contact.
  - If eye contact occurs, flush immediately with clean water and get prompt medical attention.
  - If accidentally swallowed, drink large quantities of water or milk and call a physician immediately.
  - If acid contacts skin or clothing, wash off immediately with a lot of water.
- Wear protective goggle and gloves when working with batteries.
- Batteries generate flammable hydrogen gas which may explode. Keep away from flame, sparks, fire or lighted cigarettes.
- When checking the level of the battery fluid, use a flashlight.
- Be sure to stop the engine by turning off the starter switch before inspecting or handling the battery.
- Be careful not to let metal tools or any metal objects come into contact with the battery terminals and cause a short circuit.
- Loose battery terminals may result in sparks. Be sure to fasten terminals tightly.
- Make sure the battery caps are tightened securely.
- Do not charge a battery or jump-start the engine if the battery is frozen; otherwise it may explode. Warm the frozen battery to 15°C (60°F) before use.
- Do not use or charge the battery when the battery indicator is white. The battery is at its end of life. Immediately replace the battery.
- Do not tilt the battery. Doing so could cause the battery fluid to leak out of the exhaust hole. If contacted, it may cause skin irritation or the machine part corrosion.
- Use a dampened cloth to clean the battery indicator and check the fluid level. Do not clean with a dry cloth; it can cause static electricity to build up, resulting in ignition or explosion.

Periodically replace the safety-critical parts

- To use the machine safely for a longer period, periodically add oil and perform inspection and maintenance. To improving the safely, replace the safety-critical parts like hoses and seat belts periodically. Refer to “Safety-critical parts to be replaced periodically” for further details.
- The “Safety-critical parts to be replaced periodically” are the parts which deteriorate, wear and fatigue after repeated use and whose properties change over time. While these characters of these parts could cause serious physical or personal damage, judging the remaining life of these part are difficult from external inspection or the feeling when operating.
- Replace the “Safety-critical parts to be replaced periodically” if any defect is found from external inspection, even when they have not reached the time specified interval.

Jump starting with booster cables

- When starting the engine using the booster cables, be sure to connect the cables in the proper order described below. Wrongly connected cables can result in sparking and battery explosion.
  - Do not allow the “machine in trouble” and “rescue machine” to touch each other.
  - Do not allow the positive (+) and negative (–) clips of the booster cables to touch each other or to come in contact with the machine.
  - When connecting, attach the positive booster cable to the positive (+) terminals first. When disconnecting, remove the negative cable from the negative (–) terminal (ground) first.
  - Be sure to connect the clips securely.
  - Connect the last clip of the booster cable to a point as far away from the battery as possible.
- Always wear the protective goggle and gloves when starting the engine by using the booster cables.
- Use the booster cables and clips of a size suited to the capacity of battery. Do not use damaged or corroded booster cables and clips.
- Be sure that the battery of the “rescue machine” has the same capacity as the battery of the “machine in trouble”.

Have a Takeuchi service agent repair welding

If welding must be performed, make sure that it is done by a qualified person in a properly equipped workplace. To prevent any part from breaking down or being damaged due to overcurrent or sparks, observe the following.

- Disconnect the wiring from the battery before doing electric welding.
- Do not continuously apply 200 V or more.
- The earth ground must be connected within one meter from the welding section. Do not connect the earth ground near to an electronically controlled device/ instrument or connectors.
- Make sure that there are no seals or bearings between the welding section and the earth ground.
- Do not connect the earth ground around the pins for the working equipment or hydraulic cylinders.
- When welding is to be done on the machine body, disconnect the connectors for the electronically controlled devices before working.

Vibrations operators are subject to

According to the results of the tests conducted to determine the vibrations transmitted to the operator by the machine, the upper limbs are subjected to vibrations lower than 2.5 m/s^2 (8.2 ft/s^2) while the seated part of the body is subjected to vibrations lower than 0.5 m/s^2 (1.64 ft/s^2).

Checks after maintenance

- Gradually increase the engine speed from a low idle to maximum speed and check that there is no oil or water leaking from the serviced parts.
- Operate each control lever and check that the machine is operating properly.

Disposing of wastes



- Always collect oil that is drained from the machine in containers. Improperly disposed waste oil can cause environmental harm.
- Follow appropriate laws and regulations when disposing of harmful objects such as oil, fuel, coolant, solvent, filters and batteries.
- When disposing of a machine that is no longer usable, dispose of it in accordance with the latest national and local regulations applicable at the time.

Handling of poisonous chemicals

Poisonous chemicals will cause serious injury if directly contacted.
Poisonous chemistry used in this machine includes grease, battery solution, coolant, paint and adhesive agent.
Handle the poisonous chemicals properly with care.

SAFETY SIGNS (DECALS)

For the safety of the operator and the personnel working around the site, safety signs (decals) are placed at certain locations on the machine as shown below. Walk around the machine with this manual, and check the content and location of these safety signs. Review these signs and the operating instructions in this manual with your machine operators.

- Keep the signs clean and legible. If any of the safety labels is peeling or damaged and becomes difficult to read, replace it with a new one. Please include your product serial number when ordering a new sign from the Takeuchi service agent.
- When a part/unit to which a safety sign is attached is replenished, a new sign must be attached to the new part/unit.

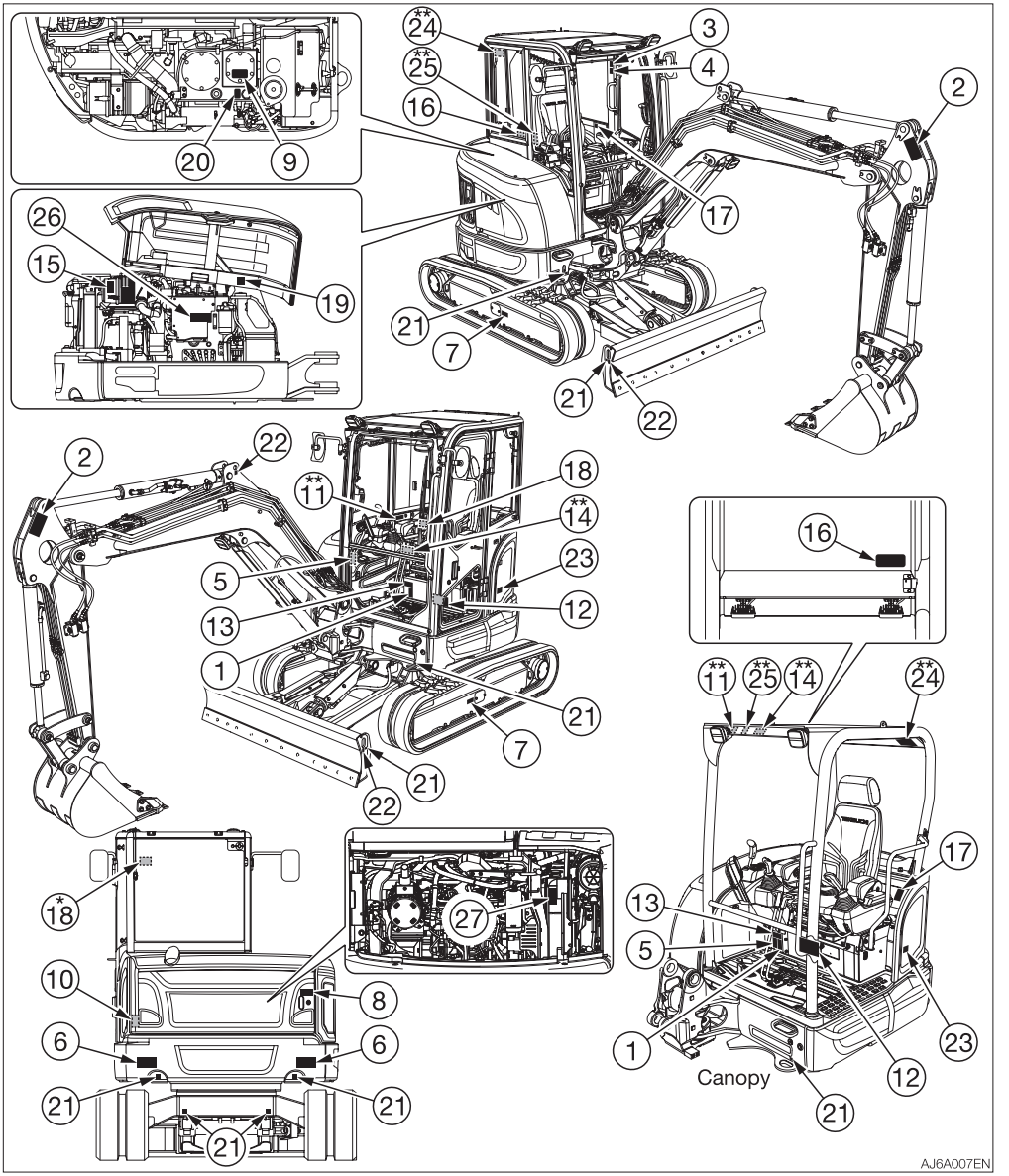

*: Machines equipped with a front guard
**: If applicable

1. No.08810-31556



Warning
Read and understand this manual before performing any operation, inspection or maintenance on this machine.

2. No.05793-00049



Safety Distance
Hazard of being hit by the working device of the machine.
Keep away from machine during operation.

3. No.03793-00166(Cab)



Hazard from falling window
After raising window, be sure to lock it in place with lock pins.

4. No.03793-00167



Hazard at lifting or lowering window
When the front window is opened or closed, it will come close to the head.
Be careful that the window does not strike the head.

5. No.05793-03643



Be careful about the hoe attachment interference
When lowering the hoe attachment, be careful not to let it hit the undercarriage or dozer blade.
Also, make sure that the boom cylinder hose does not contact the chassis.

6. No.00085-01011

Safety Distance
Do not get near or stand within the machine working area.

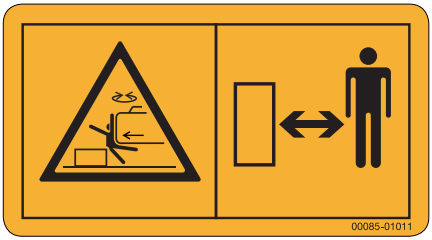

7. No.05793-00052

Hazard of a flying plug from track adjuster
Read manual before adjusting track for safe and proper handing.



AD9A005EN

8. No.03793-66006
Hazard of rotating parts
Turn off before inspection and maintenance.



9. No.08820-31135
Sign indicates a burn hazard from spurting hot water or oil if radiator or hydraulic tank is uncapped while hot.
Allow radiator or hydraulic tank to cool before removing cap.



10. No.05793-03630



Sign indicates a burn hazard from touching heated parts, such as engine, pump, or muffler during or right after operation.
Never touch when hot.

11. No.05693-68009 (Cab)
11. No.03993-00023 (Canopy)
(If applicable)
Before starting lifting operation,
be sure to turn on the lift overload warning switch.
An alarm sounds if an excessive weight is lifted.



12. No.03593-13700

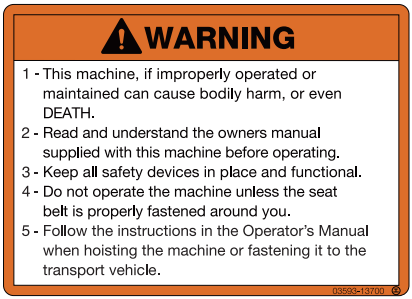

13. No.03593-47020 (If applicable)



13. No.03293-00066 (If applicable)
When a bucket wider than a standard one is installed, the cab (canopy) may be damaged if the bucket is fully offset to the left.



14. No.03593-32300



15. No.03393-75040



16. No.05693-00090 (If applicable)

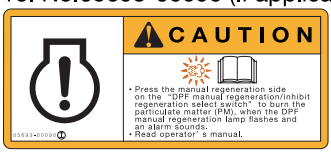

AJ6A009EN

17. No.03993-00400
For EU
Position of Fire extinguisher

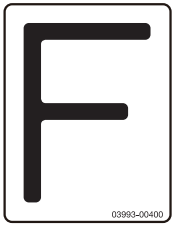

18. No.03993-00052
Position of Emergency Exit



19. No.06993-00154



20. No.03593-06700
Hydraulic oil



21. No.08810-31549
Tie down point



22. No.03393-00295
Position of hoisting



23. No.03993-47101 (If applicable)

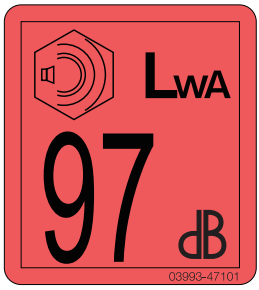

This value indicates the noise level outside the machine and refers to the noise perceived by the persons who are in the vicinity of the work area.

24. No.03993-00252 (Cab)
24. No.03993-00254 (Canopy)
(If applicable)

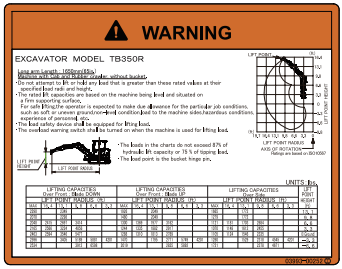

24. No.03993-00251 (If applicable)

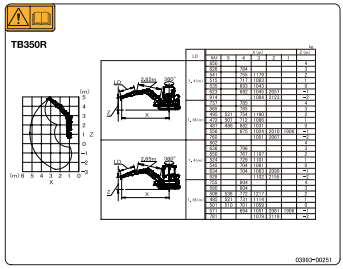

25. No.03793-69110 (If applicable)



WARNING!
Do not press the float switch while the machine is raised by the dozer blade. Doing so may cause the machine to fall.

26. No.05593-00175

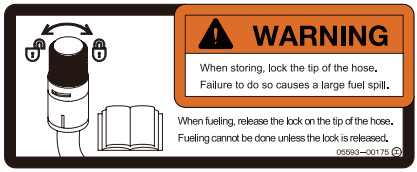

27. No.03393-50070



Sign indicates a burn hazard from spurting hot water or oil if radiator or hydraulic tank is uncapped while hot.
Allow radiator or hydraulic tank to cool before removing cap.

AJ6A012EN

CONTROLS



COMPONENT NAMES (CANOPY)

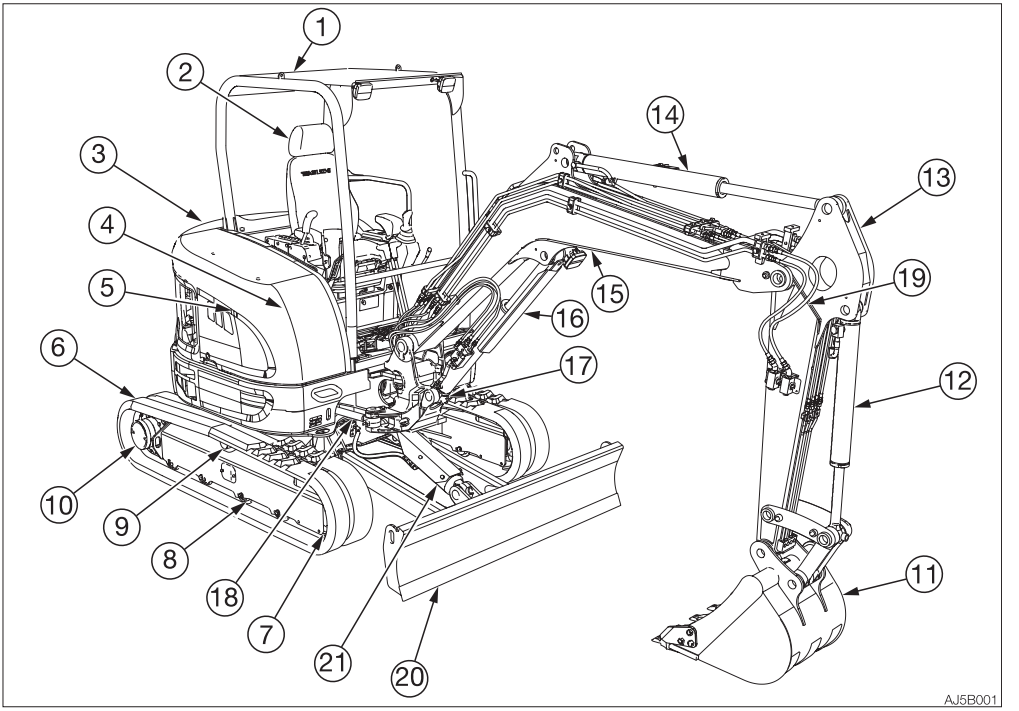

Upperstructure
1. Canopy
2. Seat
3. Engine hood
4. Fuel tank
5. Hydraulic oil tank

Undercarriage
6. Crawler belt
7. Idler
8. Track roller
9. Carrier roller
10. Travel motor

Working equipment
11. Bucket
12. Bucket cylinder
13. Arm
14. Arm cylinder
15. Boom
16. Boom cylinder
17. Boom bracket
18. Swing cylinder
19. Auxiliary hydraulic lines
20. Dozer blade
21. Blade cylinder

COMPONENT NAMES (CANOPY)

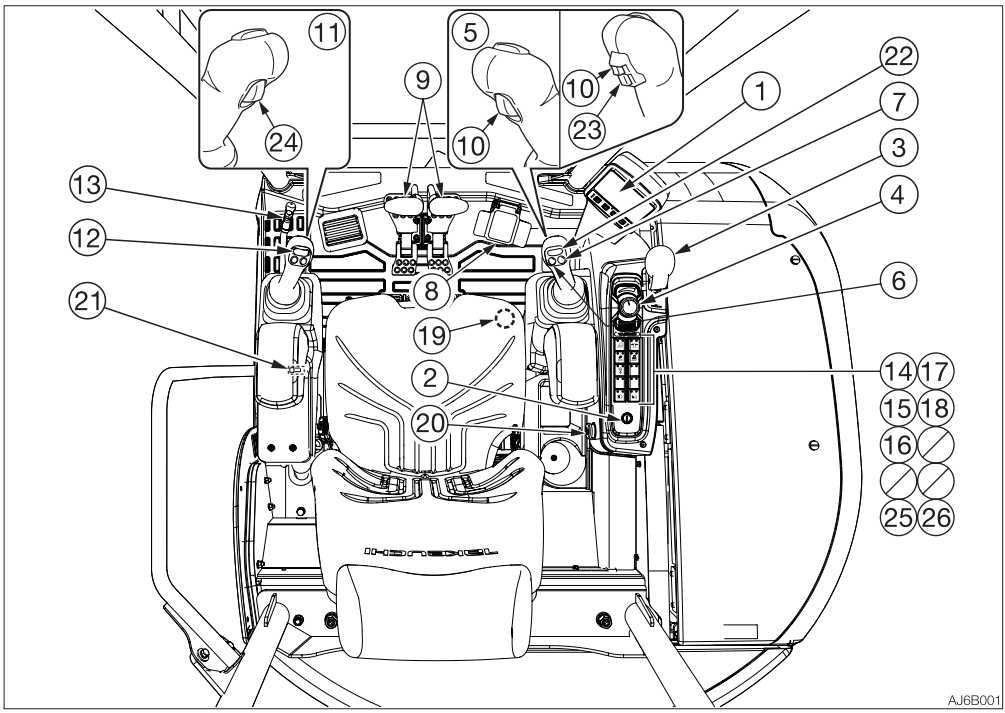

1. Multi-information display (Canopy)
2. Starter switch
3. Blade lever
4. Dial
5. Right operating lever*
6. Horn button
7. Deceleration button
8. Boom swing pedal
9. Travel levers/pedals
10. Travel speed button
11. Left operating lever
12. Auxiliary 1st switches
13. Safety lock lever
14. Light switch
15. ECO mode switch
16. Lift overload warning switch*
17. Beacon lamp switch*
18. Detent mode switch
19. Third auxiliary hydraulic switch*
20. Power supply socket*
21. Engine shutdown switch
22. Auxiliary 2nd/4th switch*
23. Auxiliary 2/4 select button*
24. Third auxiliary hydraulic button*
25. DPF manual regeneration switch
26. DPF inhibit regeneration switch

*: Subject to the specifications or optional products selected

COMPONENT NAMES (CAB)

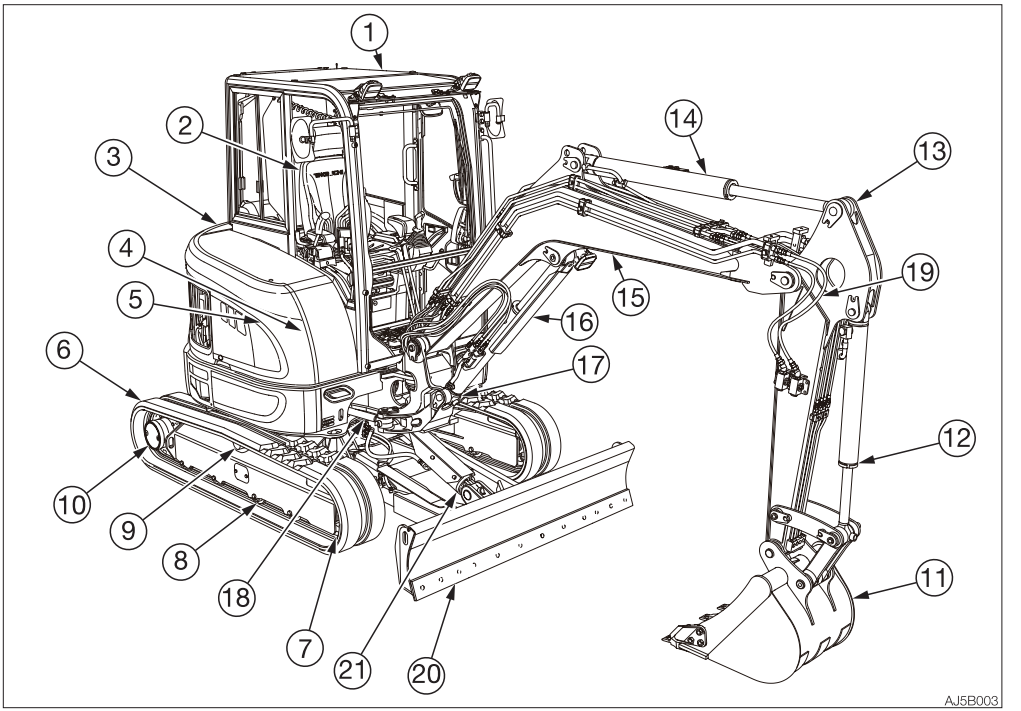

Upperstructure
1. Cab
2. Seat
3. Engine hood
4. Fuel tank
5. Hydraulic oil tank

Undercarriage
6. Crawler belt
7. Idler
8. Track roller
9. Carrier roller
10. Travel motor

Working equipment
11. Bucket
12. Bucket cylinder
13. Arm
14. Arm cylinder
15. Boom
16. Boom cylinder
17. Boom bracket
18. Swing cylinder
19. Auxiliary hydraulic lines
20. Dozer blade
21. Blade cylinder

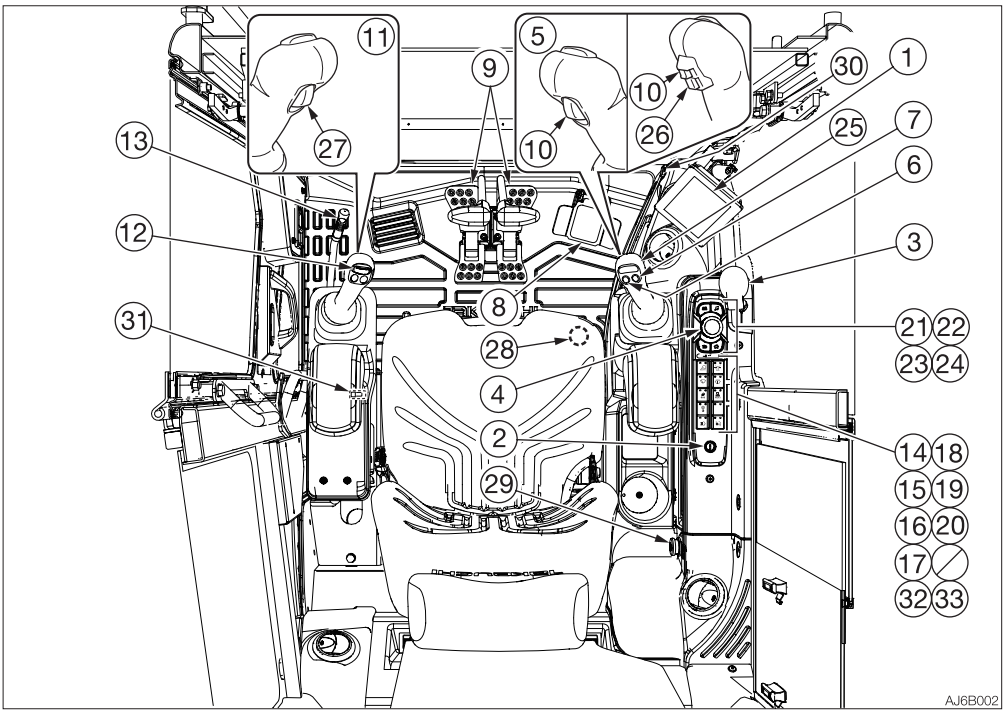

1. Multi-information display (Cab)
2. Starter switch
3. Blade lever
4. Dial
5. Right operating lever*
6. Horn button
7. Deceleration button
8. Boom swing pedal
9. Travel levers/pedals
10. Travel speed button
11. Left operating lever
12. Auxiliary 1st switches
13. Safety lock lever
14. Light switch
15. Wiper switch
16. ECO mode switch
17. Lift overload warning switch*
18. Beacon lamp switch*
19. Washer switch
20. Detent mode switch
21. Air conditioner (A/C) menu switch
22. Radio switch
23. Return switch
24. Home switch
25. Auxiliary 2nd/4th switch*
26. Auxiliary 2/4 select button*
27. Third auxiliary hydraulic button*
28. Third auxiliary hydraulic switch*
29. Power supply socket*
30. USB port
31. Engine shutdown switch
32. DPF manual regeneration switch
33. DPF inhibit regeneration switch

*: Subject to the specifications or optional products selected

COVERS

STARTER KEY

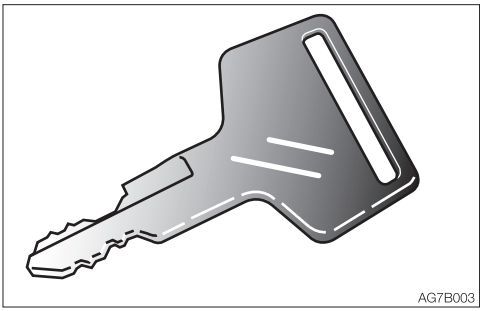

The starter key is used to start and stop the engine, as well as to lock and unlock the following components:

- Cab door
- Engine hood
- Covers

SIDE COVER

⚠ WARNING

- **Stop the engine and allow the machine to cool down before performing maintenance.**
- **Do not keep the side cover open on a windy day or if the machine is parked on a slope.**
- **When opening and closing the side cover, be careful not to get your hands or other parts of your body caught by the cover.**

Open this cover to perform inspection and maintenance of the fuse, hydraulic oil system, fuel system, coolant system or window washer, as well as to add fuel or check the level of hydraulic oil or coolant. The grease gun and the tools are also stored under the cover.

Opening

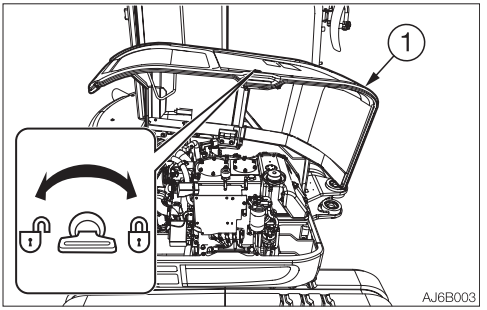

1. Insert the starter key and turn it counterclockwise to unlock the side cover (1).
2. Push in the key hole with your thumb and open the side cover (1) all the way.

Closing

1. Close the side cover (1) and press it down until a click is heard.
2. Insert the starter key and turn it clockwise to lock the side cover (1).

ENGINE HOOD

⚠ WARNING

- **Before opening the engine hood, be sure to stop the engine. If a hand or tool becomes trapped in the rotating or moving part, serious injury could result.**
- **When opening or closing the engine hood, be careful not to get your hands or other parts of your body caught by it.**

Opening

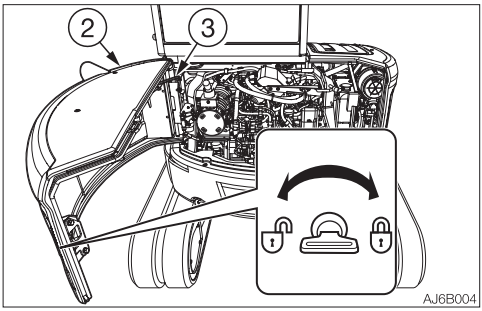

1. Insert the starter key and turn it counterclockwise to unlock the engine hood (1).
2. Push in the key hole (2) with your thumb and open the engine hood (1).

Closing

1. Support the engine hood (1) by hand and release the stay (3).
2. Close the engine hood (1).
3. Insert the starter key and turn it clockwise to lock the engine hood (1).

FUEL FILLER PORT

⚠ WARNING

- **Do not smoke and keep away from heat or flame while filling the fuel tank.**
- **Fill the fuel tank in a well ventilated place, with the engine turned off.**
- **Clean up spilled fuel immediately.**
- **Do not fill the fuel tank to capacity. Allow room for oil expansion.**
- **Securely tighten the fuel filler cap.**

Opening

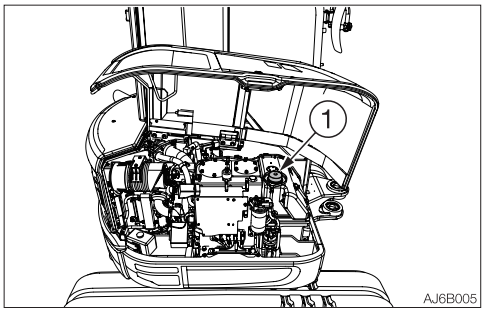

1. Open the side cover.
2. Turn the fuel filler cap (1) counterclockwise and remove it.

Closing

1. Turn the fuel filler cap (1) clockwise and close it.
2. Close the side cover and lock it.

FRONT COVER

Open this cover to switch the lever pattern (optional).

Opening

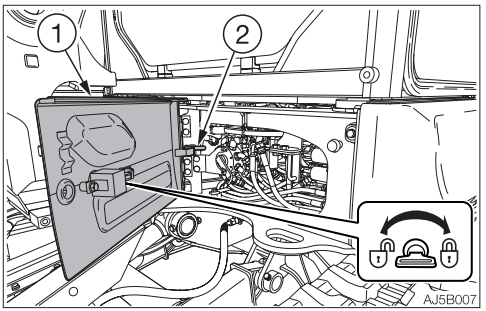

1. Insert the starter key and turn it counterclockwise to unlock the front cover (1).
2. Push in the key hole with your thumb and open the front cover (1).
3. Lower the stepper (2) to secure the front cover (1).

Closing

1. Support the front cover (1) by hand and raise the stepper (2).
2. Close the front cover (1) and push it down until a click is heard.

CAB

CAB DOOR

⚠ WARNING

When getting on or off the cab, first open the door all the way until it is secured in the catch and check that it does not move.

Open the door fully and press it against the catch at the back of the door to secure it in place.
The door must be locked when getting on or off the machine and while in operation.

Locking and unlocking

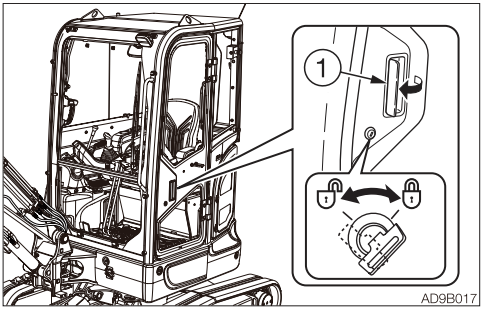

Insert the starter key and turn it.

Opening

1. Pull the knob (1) towards you and open the door.

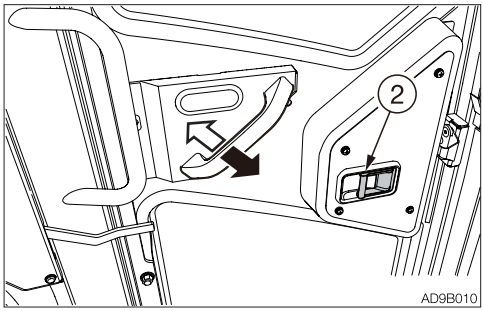

To open the door from inside the cab, hold the door opener (2).

2. Open the door fully and press it against the cab to secure it in place.

Closing

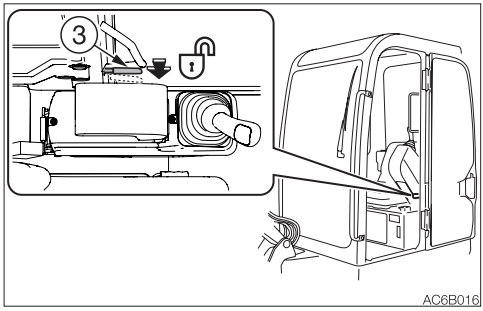

1. Push the release lever (3) to the lower.
2. Close the released door.

EMERGENCY EXIT

Front window (excluding machines with a front guard)

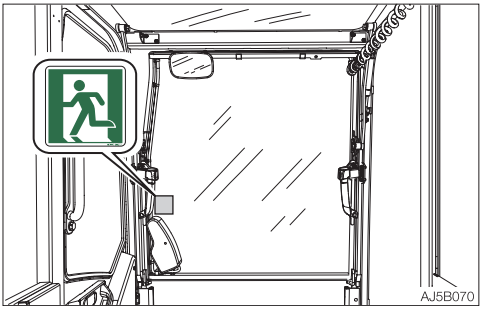

If you should become trapped inside the cab, open the front window to get out.

FRONT WINDOW

⚠ WARNING

- **Grasp the handles firmly with both hands when opening and closing the front window. Your head or hands may get caught if it slips from your hands.**
- **When the front window is opened or closed, it will come close to the head. Be careful that the window does not strike the head.**
- **When you open the front window, be sure to lock it in place with the lock pins on the left and right sides. The window may fall if it is not locked in place.**

Opening

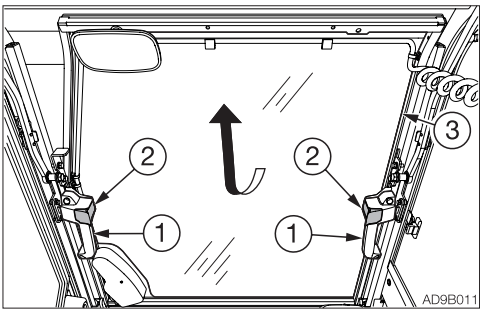

1. Park on a level surface and stop the engine.
2. Set the safety lock lever to the locked position.
3. Grasp the left and right handles (1) and press the knobs (2) with your thumb to release the lock.
4. Pull the front window (3) toward you and lift while doing so.

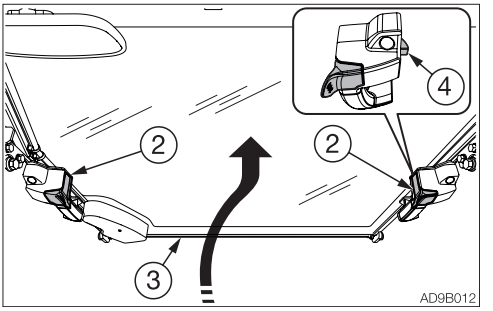

5. Release your thumb from the knobs (2) and then lift the front window (3) fully and lock the front window with lock pin (4).

Closing

⚠ WARNING

When closing the front window slowly so as not to hit your head. Lowering the window abruptly may result injury or damage the front window.

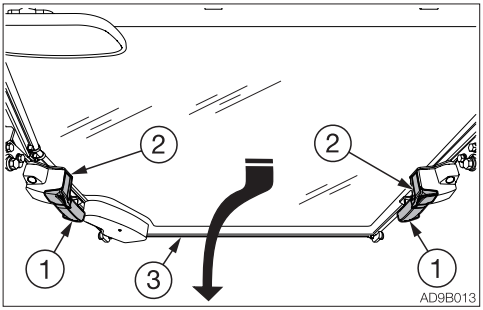

1. Grasp the left and right handles (1) and press the knobs (2) with your thumb to release the lock.
2. Pull down the front window (3) and while doing so, slide it to the front and slowly lower it.

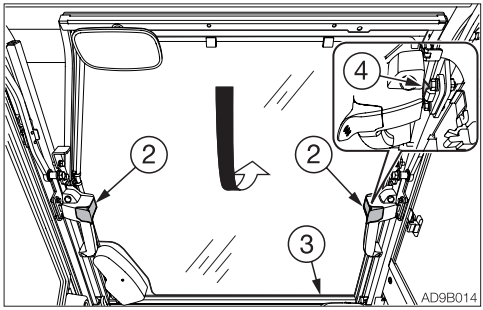

3. Release your thumb from the knobs (2) and then press the front window toward front and lock the front window with lock pin (4).

LOWER FRONT WINDOW

Removing

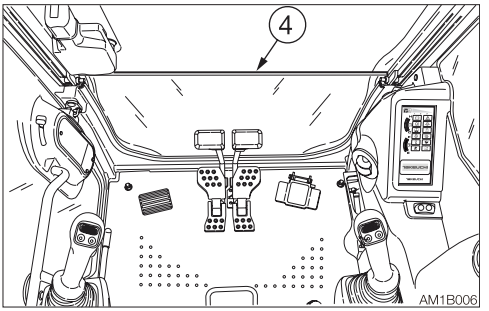

1. Open the front window and stow it in the ceiling.
2. Slowly lift the lower front window (4).

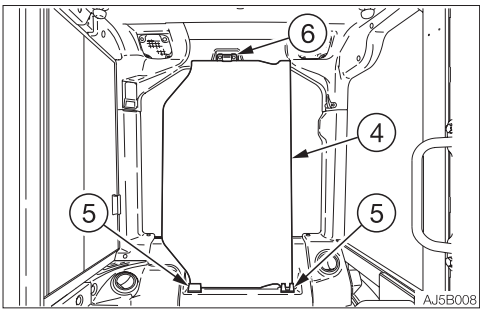

3. Hold the glass firmly, place it through the guides (5) at the rear, and then set it on the supports (6) to fasten it in place.

SIDE WINDOW

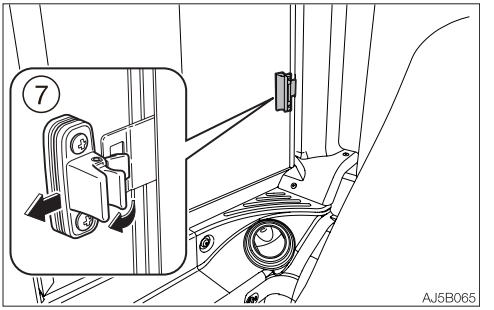

1. Grasp the catch (7), unlock it and open the side window.
2. To close the side window, close it until a click is heard.

SUN VISOR (IF APPLICABLE)

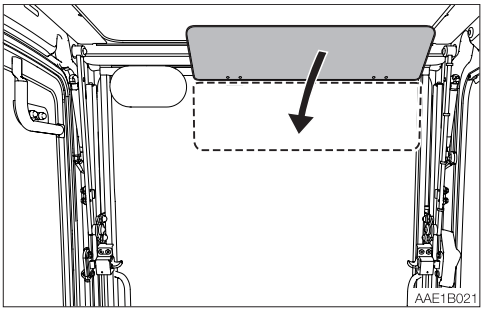

Use it when the sunlight coming from the front is glaring.

SUN SHADE

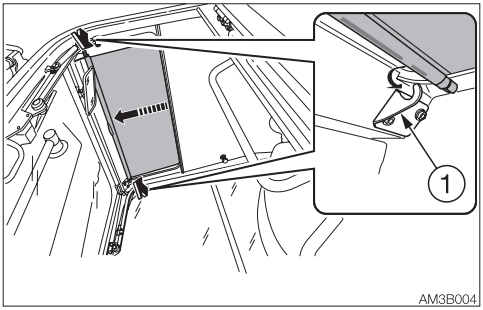

1. Pull out the sun shade forward.
2. Hook the sun shade to the two catches (1)

EMERGENCY HAMMER (OPTIONAL)

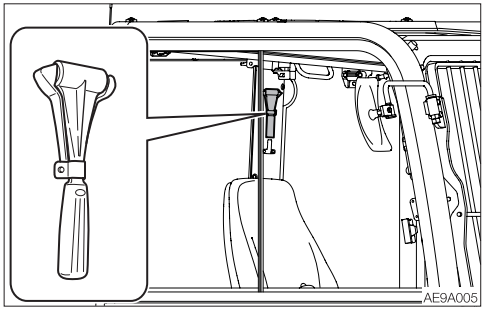

An emergency hammer is installed to be used to escape from the cab in an emergency. When escaping, break the windows with the hammer.

- When breaking the window pane with a hammer, take great care not to injure yourself with the broken glass pieces.
- Remove the glass pieces from the window sill so as not to cut yourself when evacuating. Broken glass will fall from the window, so be careful of your footing and do not slip on the glass.

SEAT AND SEAT BELT

SEAT

⚠ WARNING

- **Adjust and secure the seat.**
- **Do not make any adjustments while operating the machine.**
- **Do not set the backrest to its maximum reclining position and slide the seat backwards at the same time. Doing so may damage the rear window or cause injury.**
- **Remember that the backrest returns to the forward position abruptly due to the spring force.**

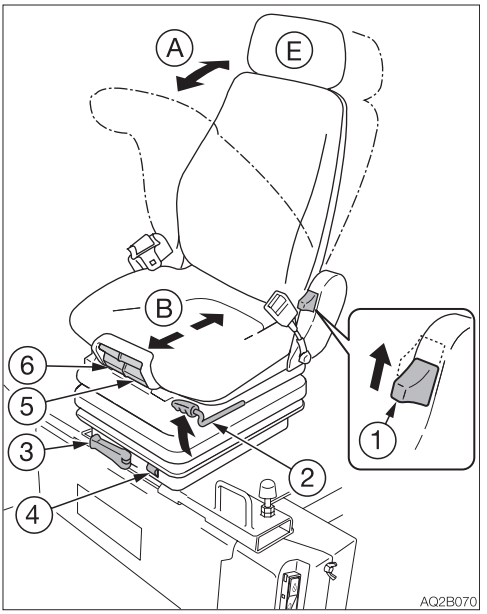

(A) Adjusting the backrest angle

1. Sit up and sit back in the seat.
2. Pull up the lever (1), recline the backrest by using the spring force. Release the lever (1) at the desired angle to secure the backrest.

(B) Fore-and-aft adjustment

1. Pull up the lever (2) and slide the seat backward or forward to the desired position for operation of machine.
2. Release the lever (2) at the desired position to secure the seat.
   Adjustment range: 15 positions, in 150 mm (5.9 in.)

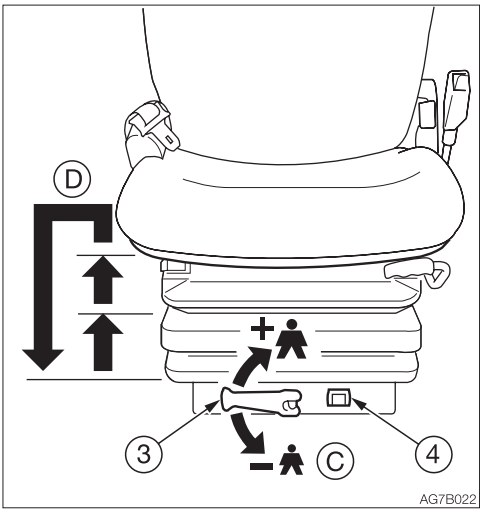

(C) Adjusting according to operator's weight

1. Turn the handle (3) until the scale (4) indicates the weight of operator.
   Adjustment range: 50 to 130 kg (110 to 287 lbs)

(D) Adjusting the height of the seat

Upward

1. Lift the seat to first or second position click-stop.
   Adjustment ranges: 2 positions, in 60 mm (2.36 in.)

Downward

1. First lift the seat to highest position, then the seat can be lowered to lowest position.

(E) Adjusting the headrest

The headrest (E) can be moved upward or downward.

1. Grab the headrest (E) with both hands, and move upward or downward to the desired position.

(F) Adjusting the seat pan angle

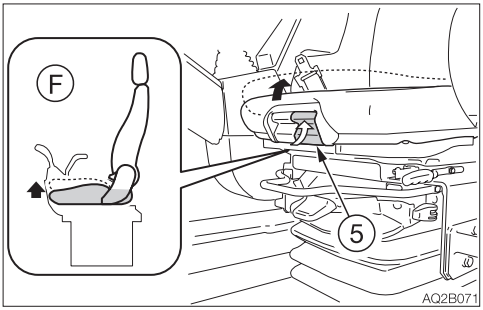

The angle of the seat pan can be individually adjusted.
To adjust, lift the left side handle (5). Use the pressure applied to the seat to set the seat pan to the desired angle.

(G) Adjusting the seat depth

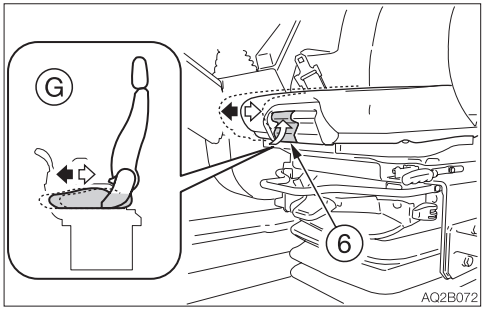

The depth of the seat pan can be individually adjusted.
To adjust, lift the right side handle (6). Move the seat cushion forward or backward until the desired seat depth is obtained.

SEAT BELT

⚠ WARNING

Be sure to fasten the seat belt securely before starting the engine.

Fastening the seat belt

1. Adjust the seat to the desired position for operation, sit up and sit back in the chair.
2. Pull the seat belt to the desired length.

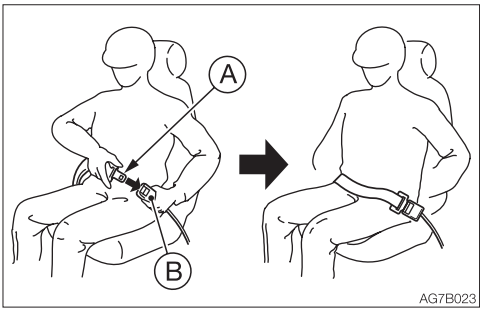

3. Make sure that the belt is not twisted and then insert the tongue plate (A) into the buckle (B) of the seat belt until you hear a clicking sound as it locks in place.
4. Check if the belt is securely locked by pulling it, and arrange the belt around your waist.

Releasing the seat belt

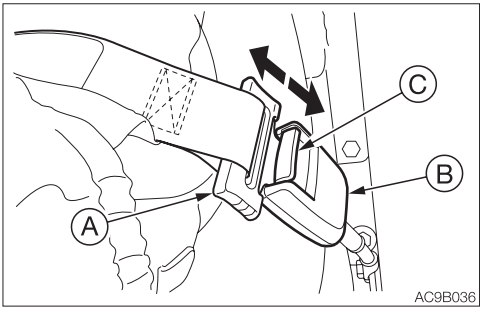

1. Grasp the tongue plate (A) and press the button (C) on the buckle (B).
   The seat belt retracts back into its original position.

MULTI-INFORMATION DISPLAY (CAB)

OPENING



AJ5B067

The opening screen appears when the starter switch is turned to ON.

HOME SCREEN

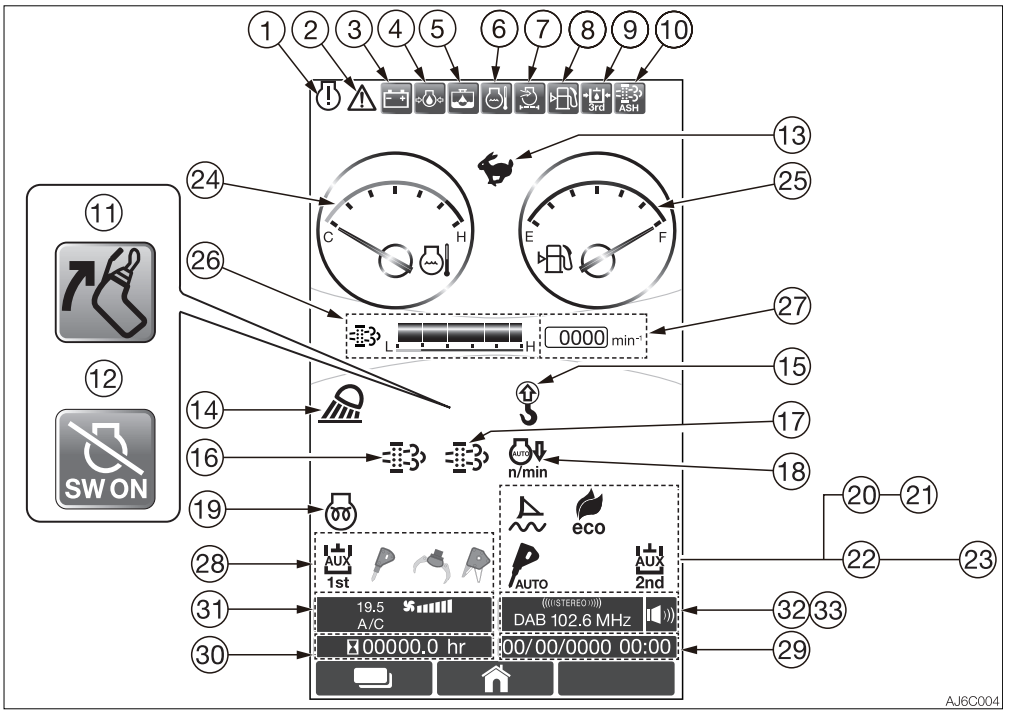
1
2
3
4
5
6
7
8
9
10
11
12
13
14
15
16
17
18
19
20
21
22
23
24
25
26
27
28
29
30
31
32
33
C
H
E
F
L
H
0000 min⁻¹
n/min
SW ON
eco
AUX 1st
AUX 2nd
AUTO
19.5 A/C
DAB 102.6 MHz
00000.0 hr
00/00/0000 00:00
AJ6C004

Machine equipped with a rear view camera

⚠ WARNING

Do not look at the images produced by the camera when traveling in reverse. Move in reverse while visually looking at the direction of travel.

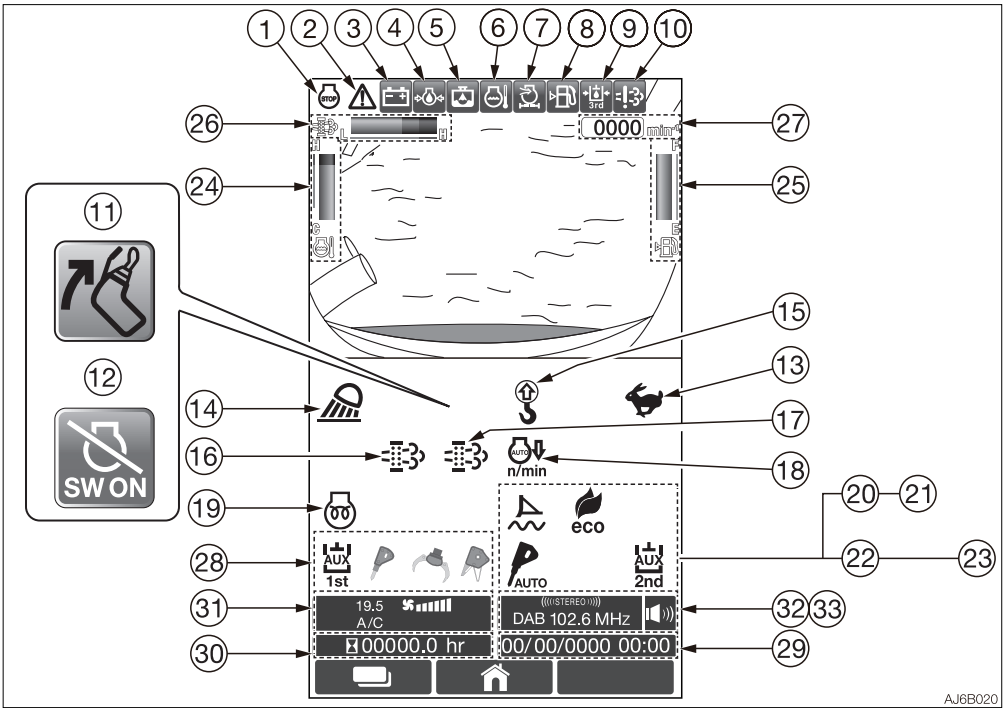

For explanation purposes, all lamps on this page are in the lit condition. This screen image is quite different from that of the real operation. In the actual operation, if a warning is given or any function is selected, the corresponding symbol appears enlarged at the center of the display for approx. one second.

Two seconds after the opening screen is displayed, the Home screen appears. The third auxiliary hydraulic warning lamp first appears enlarged, and then turns on with an alarm at their original position. The battery charge warning lamp and the engine oil pressure warning lamp start flashing. The machine system is normal if the lamps turn off after the engine is started.

ADJUSTING THE DISPLAY TILT ANGLE

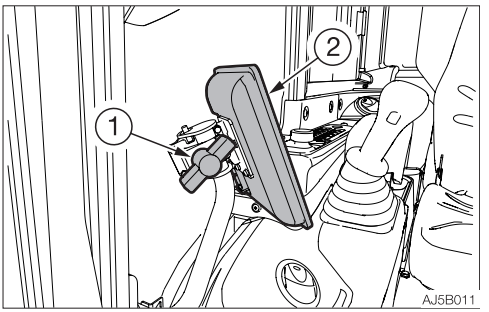

The display tilt angle can be adjusted.
1. Turn the bar knob (1) counterclockwise.
2. Adjust the tilt angle of the display (2).
3. Turn the bar knob (1) clockwise to secure the display.

WARNING LAMPS

IMPORTANT: If a warning lamp flashes and an alarm is sounded, immediately stop all operations and check the corresponding component.
Refer to “If a warning lamp flashes” on pages 6-12 to 6-14.

1. ECM error warning lamp


AJ6B012

This warning lamp flashes if the Electronic Control Module (ECM) detects an engine problem while the starter switch is in the ON position. The problem detected is recorded as an ECM error.
Refer to “Engine error code list” on pages 6-18 to 6-23.

2. Vehicle and engine emergency lamp
This lamp appears enlarged and flashes with an alarm sound if there is a problem with the machine. Go to “(7) Error code display” from the Menu screen, get the vehicle or engine error code number, and consult your sales or service dealer referring to the “Vehicle error code list” or “Engine error code list” in this manual.
Refer to “Menu screen” on page 2-32.
Refer to “(7) Error code display” on page 2-50.
Refer to “Vehicle error code list” on pages 6-16 to 6-17.
Refer to “Engine error code list” on pages 6-18 to 6-23.

3. Battery charge warning lamp
This lamp flashes and an alarm is sounded if a problem rises in the charging system while the engine is running.

4. Engine oil pressure warning lamp
This lamp flashes and an alarm is sounded if the lubricant oil pressure abnormally low while the engine is running.

5. Water separator warning lamp
This lamp flashes if water is detected within the water separator while the starter switch is in the ON position.

6. Coolant temperature warning lamp
This lamp flashes and an alarm is sounded if the engine coolant temperature becomes abnormally high while the engine is running.

7. Air cleaner warning lamp
This lamp flashes and an alarm is sounded if the air cleaner filter is clogged while the engine is running.

8. Fuel level warning lamp
This lamp flashes when the fuel level is low while the starter switch is in the ON position.

9. Third auxiliary hydraulic warning lamp
This lamp starts flashing and an alarm sounds if the fixed side (left “e”) pressure of the auxiliary 3rd drops abnormally while the engine is running, or while the quick-hitch is being removed or installed.

10. NCD warning indicator/Ash accumulation amount warning indicator

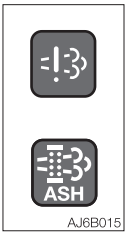

..... NCD warning indicator:
This lamp flashes and an alarm is sounded if the NOx control detects any error.
NCD: NOx Control Diagnostic system

..... Ash accumulation amount warning display:
This lamp flashes if the DPF needs cleaning; the alarm is sounded when the engine is started.
If this happens, contact your sales or service dealer for help with service.
Clean the DPF (maintenance every 6000 hours). If the machine continues operating for 200 hours more without maintenance, the engine output will be reduced by 50%.
Refer to “Cleaning the DPF” on page 5-69.

11. Safety start warning lamp

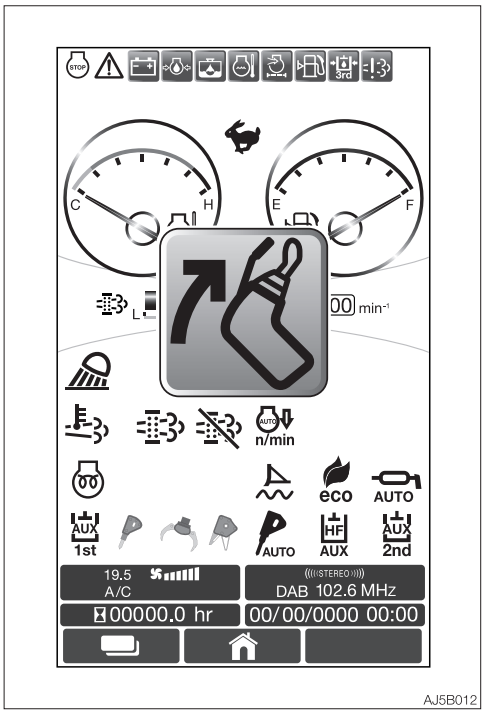

This lamp appears enlarged on the display and the buzzer sounds if the engine is started when the safety lock lever is in the unlock position. The engine cannot be started. First, set the safety lock lever to the lock position, and then start the engine.

12. Engine shutdown switch warning lamp

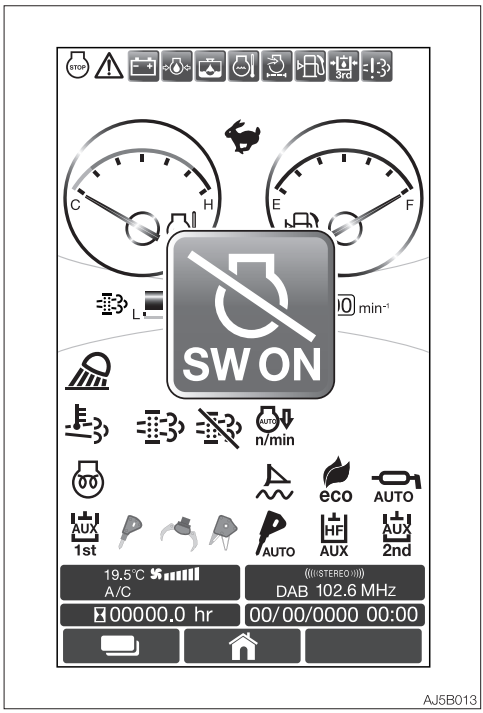

This warning lamp appears enlarged on the display and the buzzer sounds if the engine is started when the engine shutdown switch is ON. The engine cannot be started. First, turn off the engine shutdown switch, and then start the engine.

INDICATORS

13. Travel speed indicator lamp

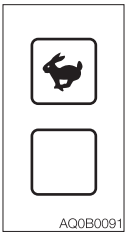

..... High-speed travel

..... Low-speed travel

This lamp turns on when the travel speed button is set to the 2nd (high) speed.

14. Working light indicator



..... Turns on when the boom light, front light and switch lamps are turned on.

..... (Machines with LED package 2)
Turns on when the boom light, front light, rear light and switch lamps are turned on.

15. Lift overload warning indicator lamp

This lamp turns on when the lift overload warning switch is turned on.

16. DPF manual regeneration under way/ regeneration promoting indicator lamp

The indicator starts flashing and an alarm starts sounding, if the accumulated PM exceeds the limit amount on the DPF. Immediately perform the manual DPF regeneration.
Refer to “DPF manual regeneration switch/DPF inhibit regeneration switch” on page 2-86.

17. DPF auto regeneration/inhibit indicator lamp

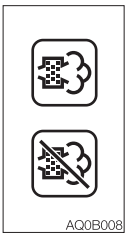

..... DPF auto regeneration under way

..... DPF auto regeneration inhibit

DPF auto regeneration under way
The DPF regeneration is automatically performed by the engine, when certain criteria are met. The operator only has to check the display.

DPF auto regeneration inhibit
The DPF manual regeneration inhibit symbol appears on the display when the DPF manual regeneration under way or the DPF auto regeneration under way is cancelled.
Refer to “DPF manual regeneration switch/DPF inhibit regeneration switch” on page 2-86.

18. Deceleration indicator lamp

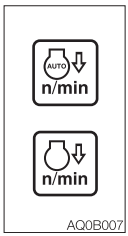

..... Automatic deceleration indicator

..... Deceleration indicator

Automatic deceleration indicator
This lamp turns on when the automatic deceleration is selected by the ON/OFF setting and remains lit while in the deceleration mode.
Refer to “ON/OFF setting” on page 2-48.

Deceleration indicator
This lamp turns on when the deceleration button is pressed. The lamp lights up to indicate that the engine is in the deceleration mode at low idling speed.
Refer to “Deceleration button” on page 2-82.

19. Glow indicator lamp
This indicator lamp turns off when the engine preheating is completed.

20. Dozer blade float indicator lamp (If applicable)


AM3B005

This lamp lights up when the float switch on the blade lever is pressed.

21. ECO mode indicator lamp
This lamp lights up when the ECO mode switch is pressed. The machine drives with reduced RPM for lower fuel consumption, without compromising workability.

22. Auxiliary 1st one-way (one-way circuit) indicator lamp



AQ0B012

..... Auxiliary 1st auto tank is selected.

..... Auxiliary 1st one-way is selected.

No display: ... Two-way (two-way circuit) is selected.

23. Auxiliary 2nd/4th select indicator lamp

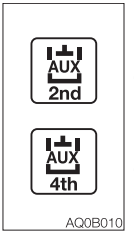

AQ0B010

..... Auxiliary 2nd is selected.

..... Auxiliary 4th is selected.

24. Water temperature gauge
Indicates the temperature of the engine coolant water. The indicator level must be within the green range during machine operation. The red range indicates overheating.

25. Fuel gauge
Indicates the amount of fuel in the tank. Be sure to fill up the tank before running out of fuel.

26. Throttle opening position indicator

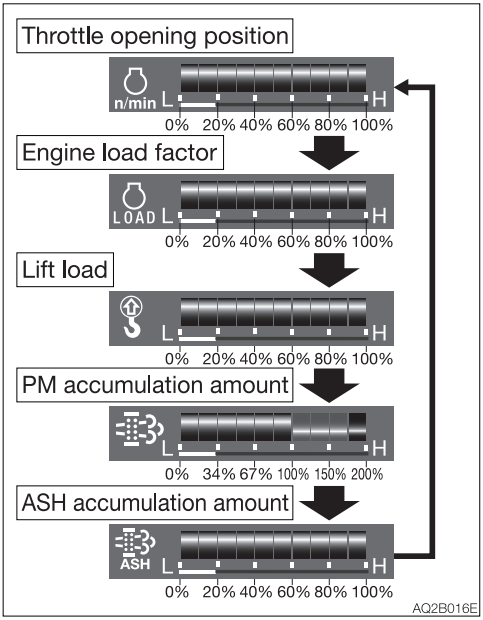

This gauge displays the throttle opening position, engine load factor, lift load factor, PM accumulation amount and ASH accumulation amount.

Touch operation
Tap the symbol of the function, to the left of the gauge, to be displayed on the screens (except the opening screen).

Dial operation
Select the symbol of the function, to the left of the gauge, to be displayed on the screens (except the opening screen), and then press the dial.

- The lift load factor is displayed if there is no change in the throttle opening position for five seconds after the lift alarm switch is turned on.
- The throttle opening position is displayed if it is increased/decreased by at least 5%.

Throttle opening position
Displays the throttle opening position by adjusting the dial.

Engine load factor
Displays the engine load factor.

Lift load factor
Displays the lift load factor.

PM accumulation amount
Displays the estimated amount of particulate matter (PM) accumulated.
When the PM (particulate matter) accumulation amount exceeds a certain level, the DPF manual regeneration symbol starts flashing on the display and the alarm starts sounding. Perform the DPF manual regeneration.
Refer to “DPF manual regeneration switch/ DPF inhibit regeneration switch” on page 2-86.

ASH accumulation amount
Displays the ASH accumulation amount.
When the ASH accumulation amount exceeds a certain level in the DPF, the ASH accumulation warning indicator starts flashing and the alarm starts sounding. Clean the DPF.
Refer to “Cleaning the DPF” on page 5-69.

27. Actual engine RPM
Displays the actual engine RPM.

28. Auxiliary 1st flow rate indicator lamp
This lamp lights up to indicate which flow rate setting is selected in the auxiliary 1st.
To switch to the desired flow rate setting, tap the corresponding symbol or use the cursor to select the corresponding symbol and press the dial.

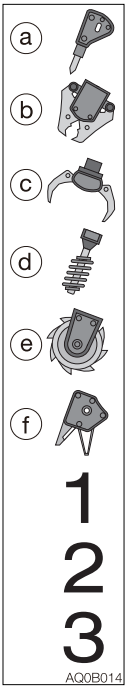

..... a Flow rate setting 1
..... b Flow rate setting 2
..... c Flow rate setting 3
..... d Flow rate setting 4
..... e Flow rate setting 5
..... f Flow rate setting 6
..... 1 Flow rate setting 7
..... 2 Flow rate setting 8
..... 3 Flow rate setting 9

Refer to “Auxiliary 1st flow rate setting” on page 2-42.

29. Date and time indicator
Displays the date and time set.
Refer to “Date and Time setting” on page 2-37.

30. Hour meter/Trip meter
• Hour meter

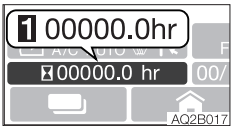

Displays the total engine running time in hours.
The rightmost digit indicates tenths of hours (6 minutes).
Set the inspection and maintenance intervals according to the time displayed on the hour meter.

• Trip meter
Three patterns of desired operating hours can be displayed.
Refer to “Trip meter setting” on page 2-33.

31. Quick air conditioner display
Displays the air conditioner settings.
Refer to “Air conditioner (If applicable)” on page 2-96.

32. Quick radio display
Displays the radio settings.
Refer to “Radio” on page 2-108.

33. Mute symbol
Touch operation
Tap the symbol to set to mute. Tapping the symbol again will cancel mute.

Dial operation
Select the symbol and press the dial to set to mute. Pressing the dial again will cancel mute.

MEMO

JOG DIAL OPERATION

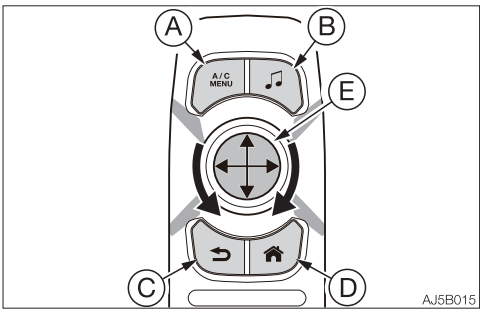

A. Air conditioner (A/C) menu switch
Displays the air conditioner screen.

B. Radio switch
Displays the radio screen.

C. Return switch
Displays the previous screen.
This switch is also used to cancel changes made in each setting. The screen returns to the Home screen if this switch is pressed in the Menu screen.
Note: Pressing the Return switch in the Home screen displays the Menu screen.

D. Home switch
Displays the Home screen.

E. Dial
When the dial is moved up/down or left/right, the cursor moves accordingly.
Press the dial to conform or to enter the edit mode.

<Edit mode>
Moving the dial up or to the right increases the set value. Moving the dial down or to the left decreases the set value. Press and hold the dial for one second to rapidly increase/decrease the value.
Turning the dial clockwise increases the engine RPM.
Turning the dial counterclockwise decreases the engine RPM.
Note: When using the touch operation, touching and holding the down arrow symbol (▽) or the up arrow symbol (△) rapidly increases/decreases the value.

TOUCH OPERATION

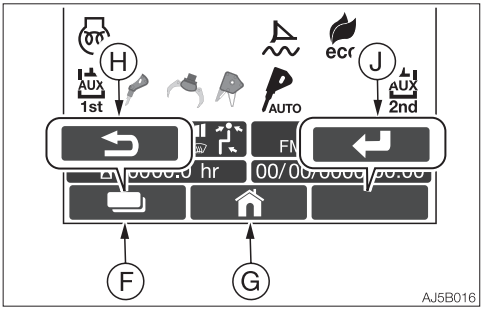

F. Menu symbol
Displays the Menu screen.

G. Home symbol
Displays the Home screen.

H. Return symbol
Displays the previous screen.
This symbol is also used to cancel changes made in each setting. The screen returns to the Home screen if this symbol is tapped in the Menu screen.

J. Enter symbol
Use this symbol to confirm or execute the setting made by each symbol.
To clear the trip meter being displayed, select and hold this symbol for three seconds.

SCREEN NAVIGATION

• Menu screen

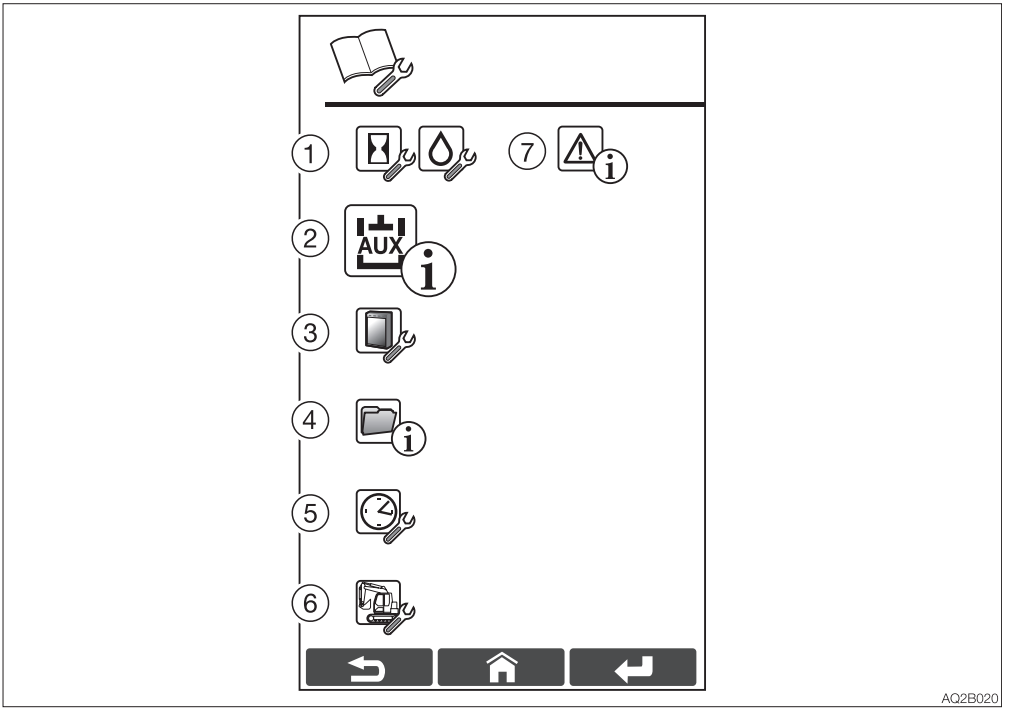

To go to the Menu screen when in the Home screen, tap the Menu symbol or press the Return switch.

(1) Trip meter setting
(2) Auxiliary line flow rate display
(3) LCD setting
(4) Data display
(5) Date and time setting
(6) Machine setting
(7) Error code display
Note: The wrench symbol indicates the "setting is possible state" and the (i) mark indicates information only.

Touch operation
Tap the symbol of the item to be set.
To return to the Home screen when in the Menu screen, tap the Return symbol or the Home symbol.

Dial operation
Use the dial to select the symbol of the item to be set, and then press the dial. (The selected symbol is displayed enlarged.)
To return to the Home screen when in the Menu screen, press the Return switch or the Home switch.

(1) TRIP METER SETTING

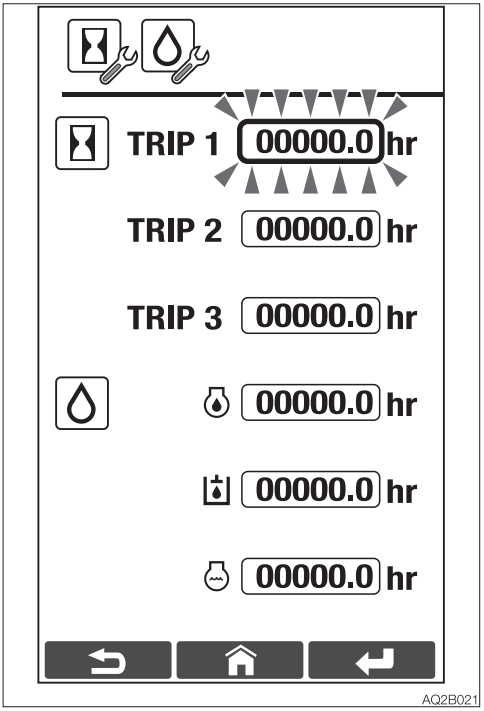

Six patterns of desired operating hours can be set.
To return to the Menu screen, tap the Return symbol or press the Return switch.

Touch operation
Tap the item to be selected.
The numerical value in the selected item flashes.
Tapping and holding the item or the Enter symbol for three seconds clears the flashing value.

Dial operation
Use the dial to select the item.
The numerical value in the selected item flashes.
Pressing and holding the dial for three seconds clears the flashing value.

(2) AUXILIARY LINE FLOW RATE DISPLAY

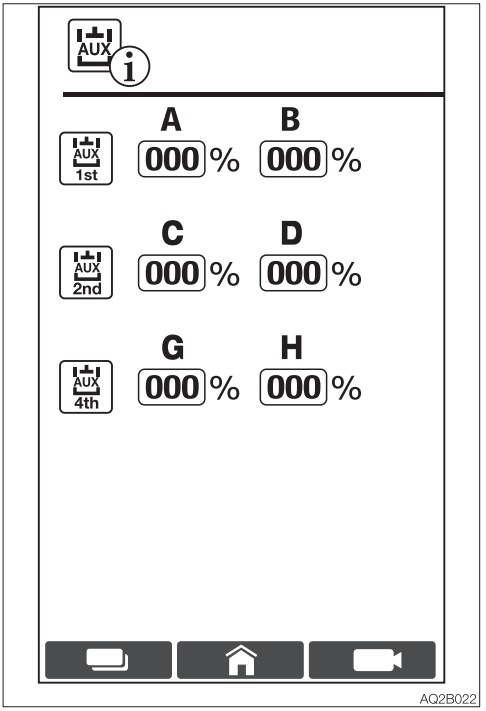

Displays the flow rate of the Auxiliary 1st, 2nd and 4th.
The flow rate cannot be changed.
To return to the Menu screen, tap the Return symbol or press the Return switch.

(3) LCD SETTING

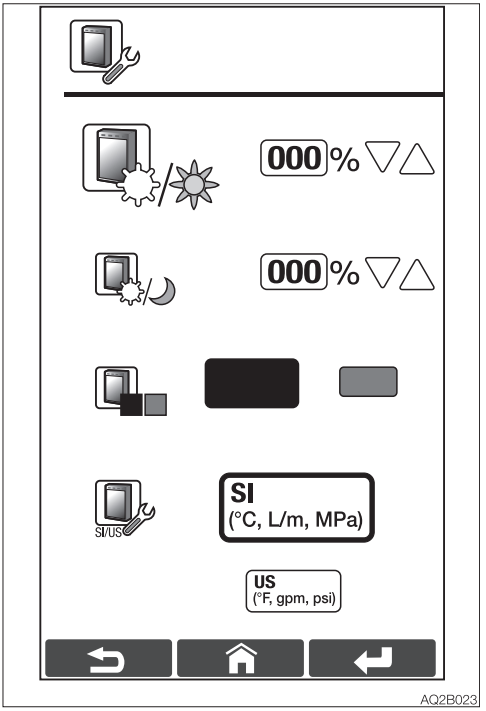

The display setting can be changed.
To return to the Menu screen, tap the Return symbol or press the Return switch.

• **Brightness setting**

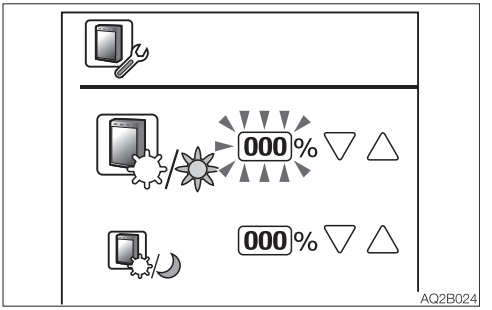

The brightness of the LCD is set to between 1 and 100%.
The brightness changes each time the adjustment is made.

Touch operation
Tap the down (▽) or up (△) arrow symbol of the brightness setting. The numeric value starts flashing to indicate that it is ready to be edited.
Use the down (▽) or up (△) arrow symbol to change the value, and then tap the Enter symbol to complete the editing.

Dial operation
Select the brightness setting symbol and press the dial. The numeric value starts flashing to indicate that it is ready to be edited. Use the dial to change the value, and then press the dial to complete the editing.

Adjustment to the night (day) mode while in the day (night) mode cannot be synchronized.

• Background color setting

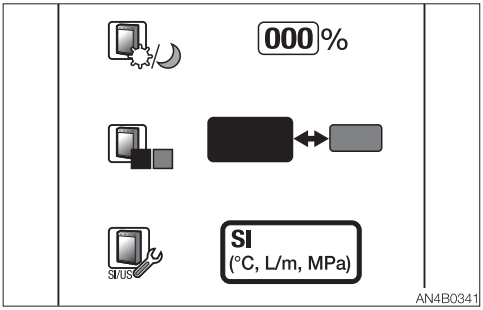

The current background color is displayed enlarged.

Touch operation
Tapping the desired color will change the background color to the one just tapped.

Dial operation
Select the background color setting symbol and press the dial to select the desired color. (The current setting is displayed enlarged.)

• Unit setting

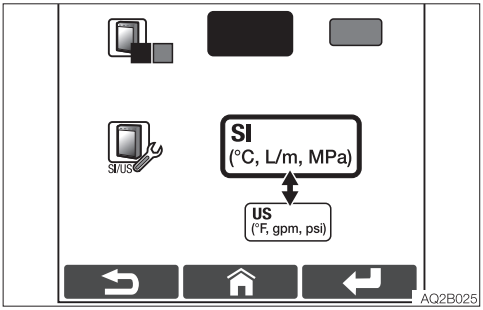

The current unit is displayed enlarged.

Touch operation
Tapping the desired unit will change the unit to the one just tapped.

Dial operation
Select the unit setting symbol and press the dial to select the desired unit.
(The current setting is displayed enlarged.)

(4) DATA DISPLAY

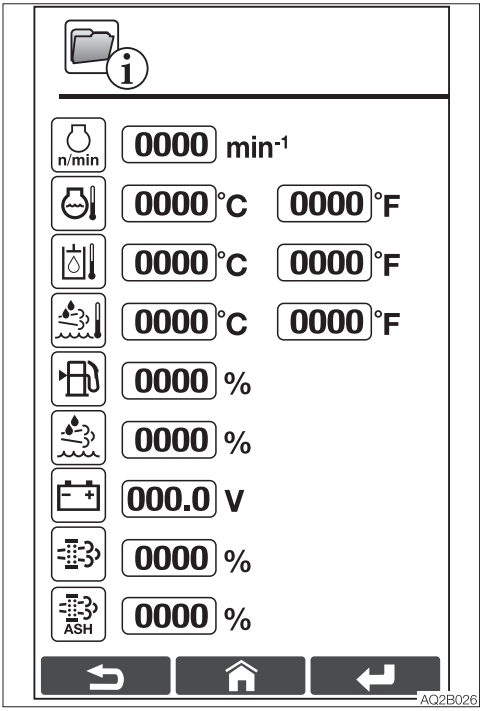

Displays various data. The setting cannot be changed.
To return to the Menu screen, tap the Return symbol or press the Return switch.

Display items
- Engine RPM
- Coolant temperature
- Hydraulic oil temperature
- DEF/AdBlue® temperature
- Fuel level
- DEF/AdBlue® level
- Battery voltage
- PM accumulation amount
- Ash accumulation amount

Note: For the data item not applicable to this machine, N/A is displayed.

(5) DATE AND TIME SETTING

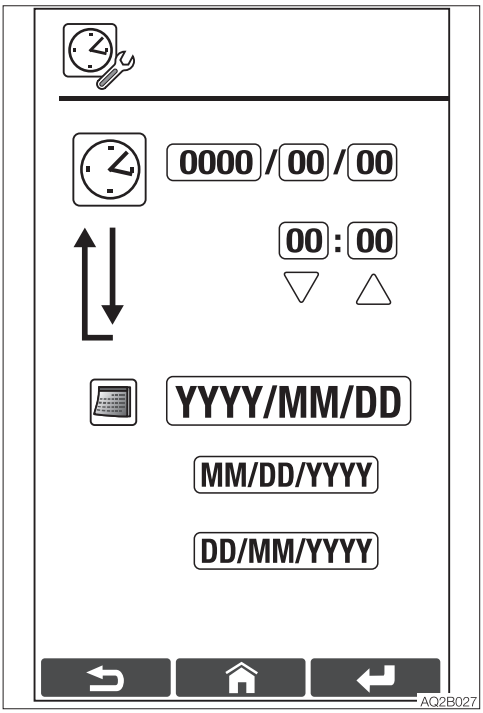

The year, month, date, hour and minute can be set. (Effective year range: 2010 to 2099)
To return to the Menu screen, tap the Return symbol or press the Return switch.

• Date/Time setting

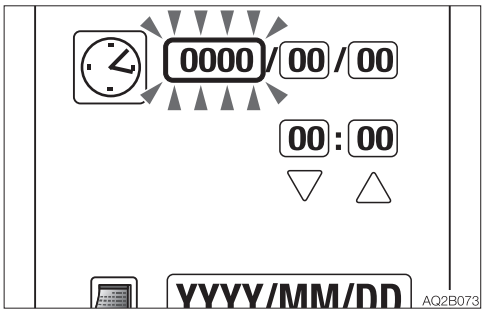

Touch operation
Tap the item of the date or time to be set. The numeric value starts flashing to indicate that it is ready to be edited.
Use the down (▽) or up (△) arrow symbol to change the value, and then tap the Enter symbol to complete the editing.

Dial operation
Select the clock symbol and press the dial to display the field. Select the item to be set and press the dial. The numeric values start flashing to indicate that it is ready to be edited. Use the dial to change the value, and then press the dial to complete the editing.

• Date/Time display format



The current calendar display format is displayed enlarged.

Touch operation
Tapping the desired format will change the calendar display format to the one just tapped.

Dial operation
Select the calendar symbol and press the dial to select the desired calendar format. (The current setting is displayed enlarged.)

(6) MACHINE SETTING

• **Machine setting screen**

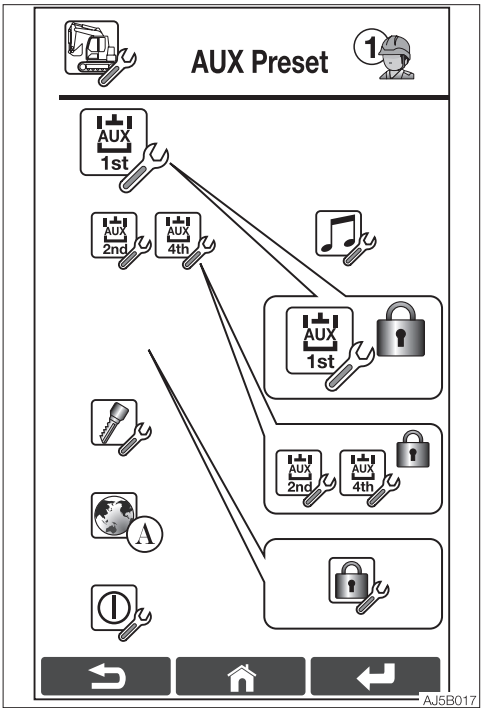

The settings made to the machine can be changed.
To return to the Menu screen, tap the Return symbol or press the Return switch.

Touch operation
Tap the item to be selected.

Dial operation
Use the dial to select the item, and then press the dial to confirm. (The selected item is displayed enlarged.)

Note: When the auxiliary flow rate locking is set to enabled, the lock symbol is added to the upper right of the “auxiliary flow rate” symbol.
You are requested to enter the password when setting the auxiliary flow rate, locking/unlocking the auxiliary flow rate or changing the password.
Note: When the auxiliary flow rate locking is set to disabled, the lock symbol is not displayed.

• **Preset patterns**

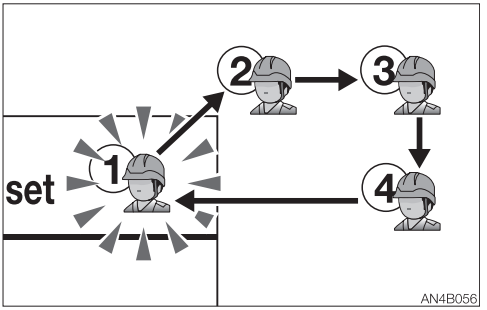

Four setting patterns can be made in the auxiliary 1st and 2nd/4th.
You can also set a password for each pattern.

Touch operation
While in the machine setting screen, tap the face symbol in the upper right of the screen to switch to the desired pattern.

Dial operation
While in the machine setting screen, select the face symbol in the upper right of the screen, and then press the dial to select the desired pattern.

• Requesting password screen

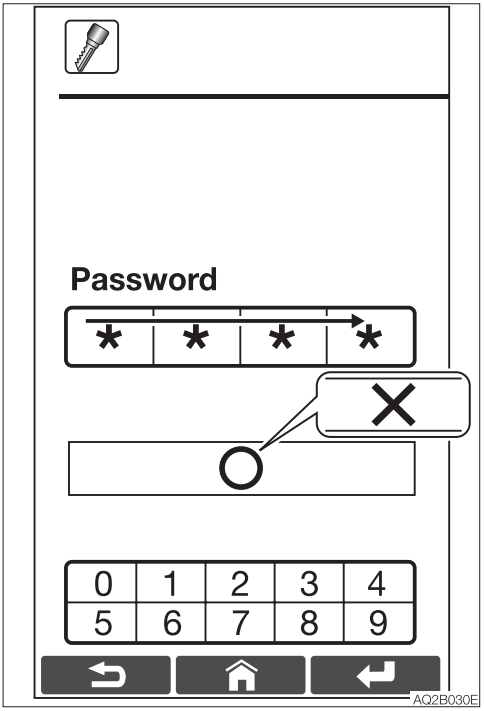

When the password setting is set to enabled, you are requested to enter the password when setting the auxiliary line, locking/unlocking the auxiliary or changing the password.

Touch operation
Enter a 4-digit numeric password by tapping the numbers.

Dial operation
A 4-digit numeric password is entered using the dial.
The selected number flashes.
Select the number to be set and press the dial.

Enter the current password. If it is correct, the setting screen appears. If it is not, a cross (X) is displayed.
It is not necessary to enter the password again unless you want to change it or until you turn the starter switch to OFF.

1. Auxiliary 1st flow rate setting

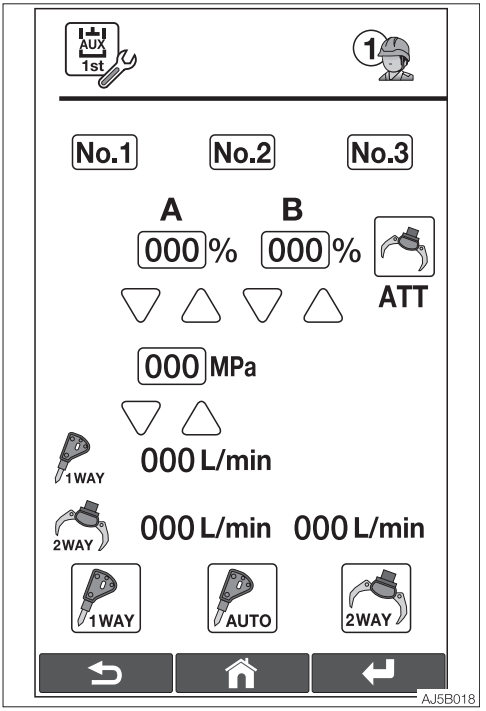

In addition to using the machine setting screen, the auxiliary 1st flow rate setting can be selected by either of the following ways:

- Tap and hold the auxiliary 1st flow rate indicator lamp on the Home screen for at least one second.
- Use the cursor to select the auxiliary 1st flow rate indicator lamp on the Home screen and press the dial for at least one second.

For the flow rate and pressure in the auxiliary 1st, three setting patterns can be made. The three patterns set are shown on the Home screen to choose from. To return to the machine setting screen, tap the Return symbol or press the Return switch.

Note: Changing the preset pressure is an optional function, and so it may not be available depending on the machine used. If the function is not available, the pressure is displayed as “N/A”.

Touch operation

Tap the pattern number to be set.
Use the down (▽) or up (△) arrow symbol of the item to be set to change the value, and then tap the Enter symbol to complete the editing.

Dial operation

Select the pattern number to be set and press the dial to display the fields. Select the item to be set and press the dial. The numeric value starts flashing to indicate that it is ready to be edited. Use the dial to change the value, and then press the dial to complete the editing.

Initial condition	Standard flow	Variable range
No.1	100%=92 L/min (24.3 US gpm)	10 to 100%
No.2	75%=69 L/min (18.2 US gpm)	10 to 100%
No.3	50%=46 L/min (12.2 US gpm)	10 to 100%

The table shows the 1-way flow rate when there is no load.

Note: The 1-way flow can be performed only when the switch (A) is used.

• Attachment select screen

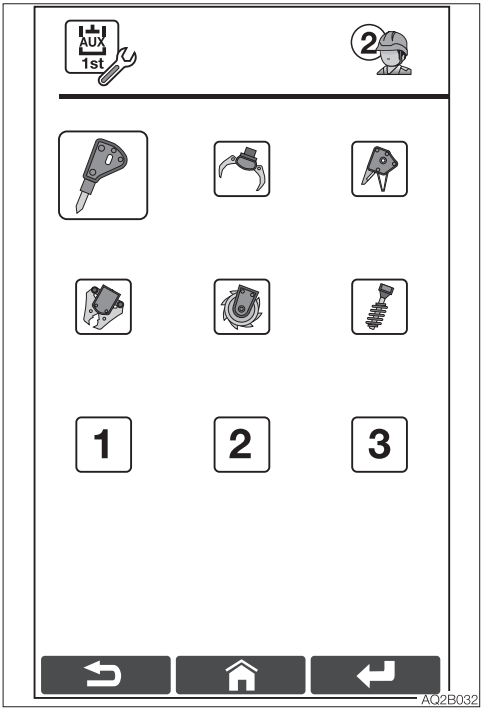

Touch operation
Tap the “ATT” to go to the attachment select screen. Tap the desired item to be set. (The selected item is displayed enlarged.) Tap the Return symbol to go the auxiliary 1st setting screen.

Dial operation
Pressing the dial when the field is at “ATT” goes to the attachment select screen. Use the dial to select the item to be set, and then press the dial to confirm. (The selected item is displayed enlarged.) Once the attachment selection is done, the screen automatically returns to the auxiliary 1st flow rate setting.

• Flow selection

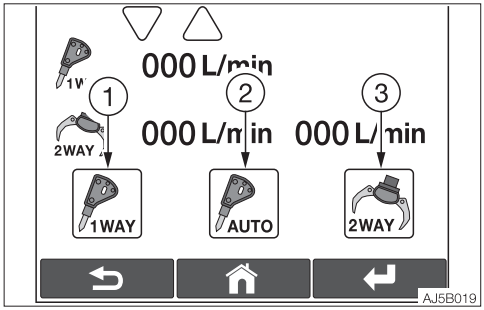

Use this symbol to change the direction of hydraulic oil flow in the Aux. 1st line.
(1) One-way flow (When using a hydraulic breaker)
(2) Auto tank (The one-way flow can be set only when the button “A” of the Aux. 1 is pressed. The tank circuit is automatically opened.)
(3) Two-way flow (When using a reversible attachment)

Touch operation
Tap the symbol of the setting to be set.

Dial operation
Select the desired “No.” and press the dial. Moving the dial downward displays the (1), (2) or (3) enclosed by the blue frame. Press the dial to select he desired setting. (The current setting is displayed enlarged.)

2. Auxiliary 2nd/4th flow rate setting

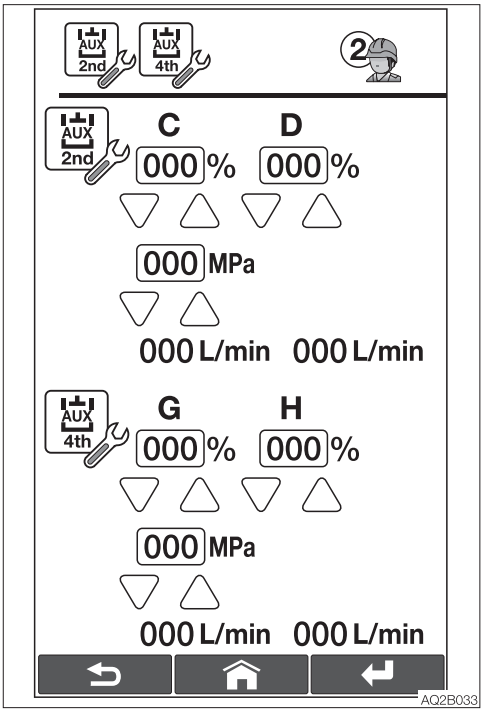

For the flow rate in the auxiliary 2nd/4th, one setting pattern can be made. To return to the machine setting screen, tap the Return symbol or press the Return switch.

Note: Changing the preset pressure is an optional function, and so it may not be available depending on the machine used. If the function is not available, the pressure is displayed as “N/A”.

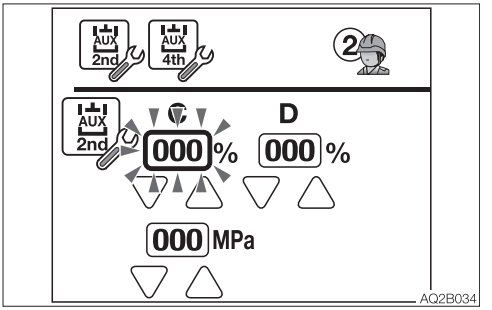

Touch operation
Use the down (▽) or up (△) arrow symbol of the item to be set to change the value, and then tap the Enter symbol to complete the editing.

Dial operation
Select the item to be set and press the dial. The numeric value starts flashing to indicate that it is ready to be edited. Use the dial to change the value, and then press the dial to complete the editing.

Initial condition	C/D, G/H common, standard flow	Variable range
Auxiliary 2nd	C/D 100% = 41 L/min (10.8 US gpm)	10 to 100%
Auxiliary 4th	G/H 100% = 41 L/min (10.8 US gpm)	10 to 100%

3. Setting the auxiliary flow rate locking

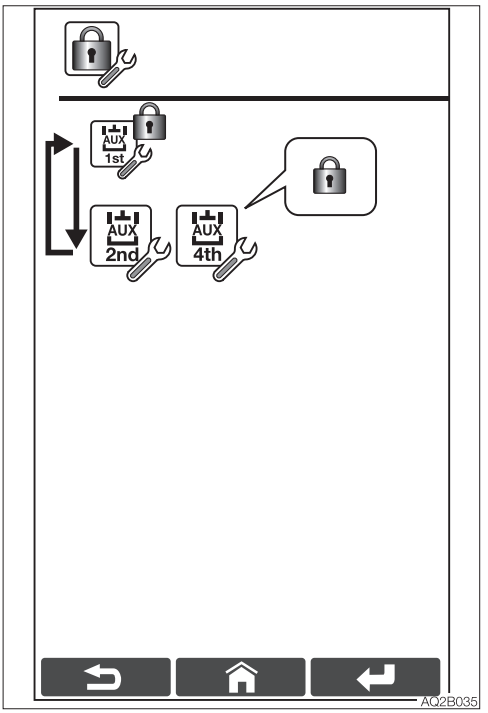

A password can be set as compulsory when the auxiliary setting is made.
To return to the machine setting screen, tap the Return symbol or press the Return switch.

Touch operation
Tap the item to be set to lock or unlock.

Dial operation
Use the dial to select the item, and then press the dial to lock or unlock.
(The selected item is displayed enlarged.)

Lock symbol is lit: Enabled
Lock symbol is off: Disabled

4. Password setting

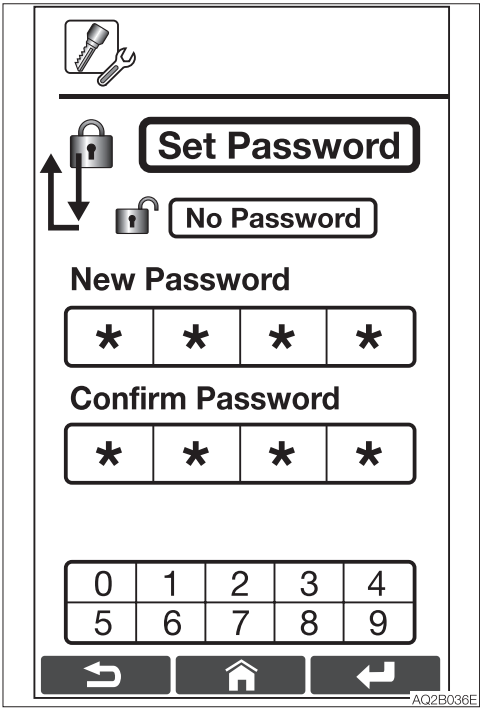

The password can be set. To return to the machine setting screen, tap the Return symbol or press the Return switch.
Note: In case you forget the password, contact your sales dealer.

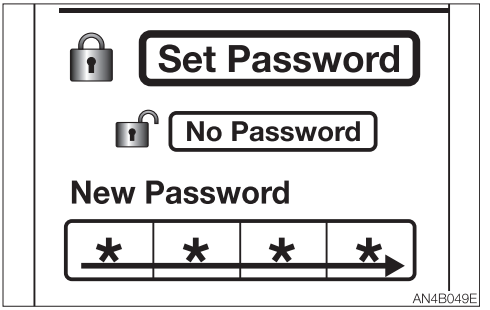

Touch operation
Tap “Set Password”.

Dial operation
Use the dial to select “Set Password”, and then press the dial to confirm. (The number “0” starts flashing.)

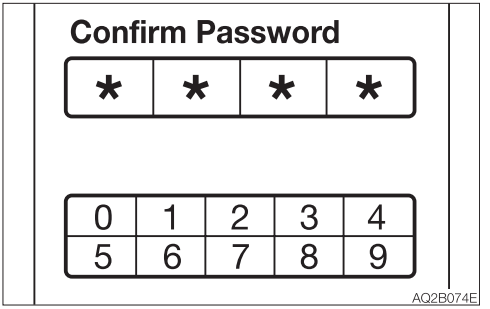

Touch operation
Enter a 4-digit numeric password by tapping the numbers.

Dial operation
Enter a 4-digit numeric password by using the dial.
(The selected number flashes.)

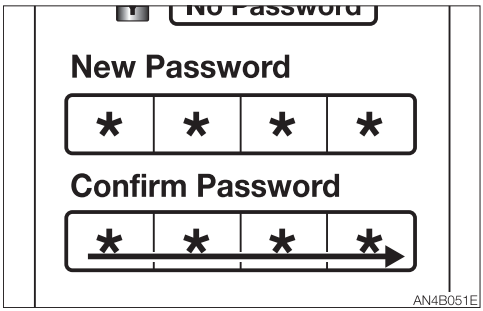

Enter a password in “New Password”, and then enter the same password in “Confirm Password”.

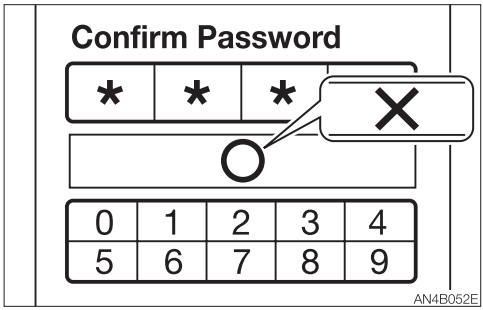

If the two passwords are identical, a circle (O) is displayed to indicate that the setting is enabled. To return to the machine setting screen, tap the Return symbol or press the Return switch.
If a cross (X) is displayed, enter the password in “Confirm Password” again.

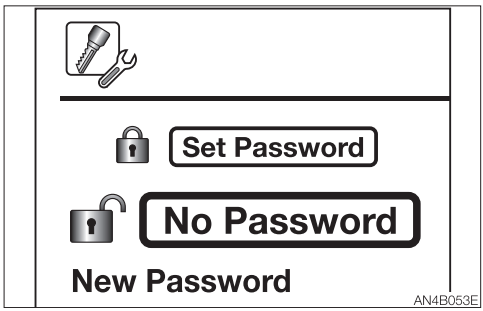

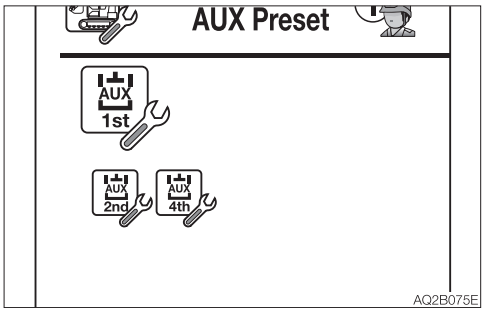

Selecting “No Password” and tapping the Enter symbol or pressing the dial disables the password setting and goes to the machine setting screen. When the password setting is cancelled, the service lock symbol is not displayed on the machine setting screen.

5. Language selection

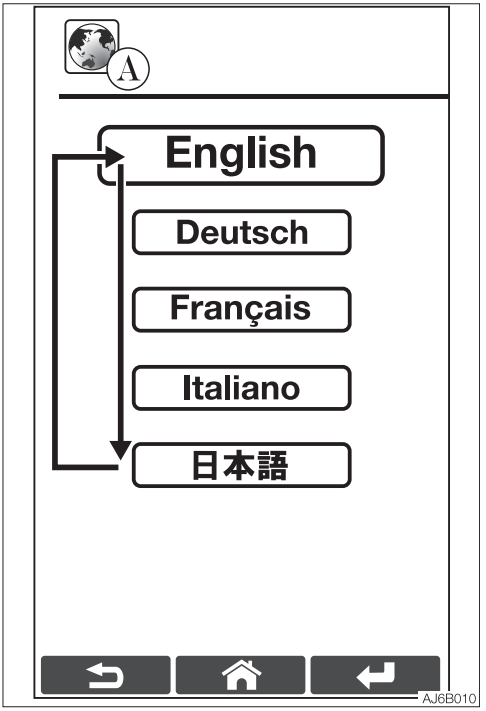

The language used can be selected.
To return to the machine setting screen, tap the Return symbol or press the Return switch.

Touch operation
Tapping the desired language will change the language to the one just tapped.

Dial operation
Use the dial to select the desired language, and then press the dial to confirm.
(The selected item is displayed enlarged.)

6. ON/OFF setting

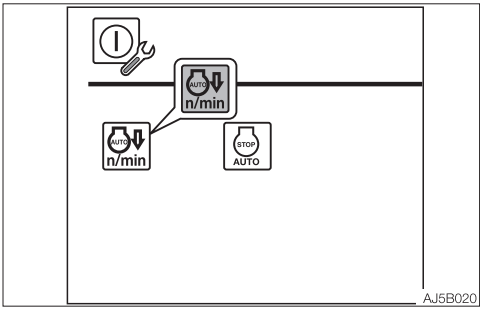

You can set the following functions to ON or OFF: automatic deceleration, auto camera mode, engine auto stop and display rotation.
To return to the machine setting screen, tap the Return symbol or press the Return switch.

Touch operation
Tap the item to be set to ON or OFF.

Dial operation
Use the dial to select the item, and then press the dial to set to ON or Off.

White background: ON
Gray background: OFF

7. Radio region setting



Set the radio region to be used.
The region can be changed only when the radio is turned off.
To return to the machine setting screen, tap the Return symbol or press the Return switch.

Touch operation
Tapping the desired region will change the region to the one just tapped.

Dial operation
Use the dial to select the desired radio region, and then press the dial to confirm.

(7) ERROR CODE DISPLAY

- **Vehicle error code/ECM error code display screen**

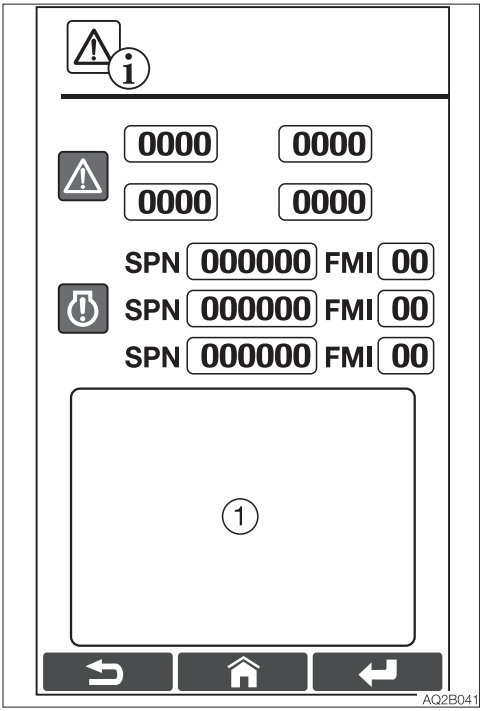

To return to the Menu screen, tap the Return symbol or press the Return switch.

⚠.....Vehicle error code
Displays four error codes, with the latest code in the upper left.
Refer to “Vehicle error code list” on pages 6-16 to 6-17.

.....ECM error code
Engine ECM (Engine Control Module) error code
Displays three error codes, with the latest code at the top.
Refer to “Engine error code list” on pages 6-18 to 6-23.

On the description screen (1), description of each error code is displayed.

Touch operation
If multiple error codes are displayed, tap the error code to be displayed.

Dial operation
If multiple error codes are displayed, use the dial to select the error code to be displayed.

IMPORTANT: If an error code appears, immediately stop the operation and contact a Takeuchi sales or service outlet for help.

• Vehicle past error code display screen

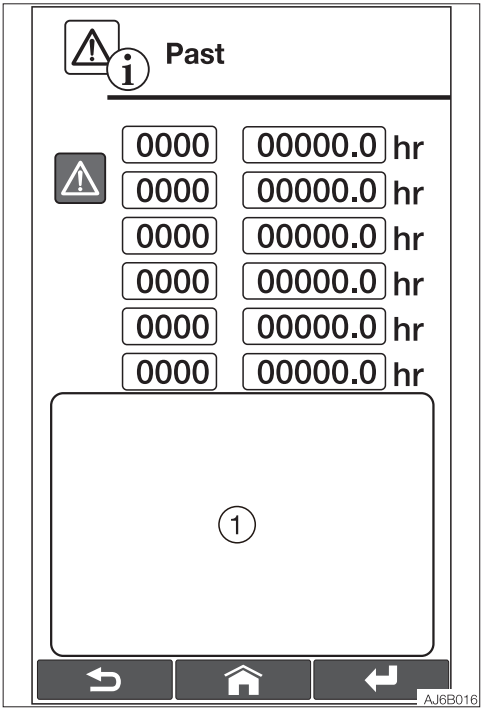

To return to the Menu screen, tap the Return symbol or press the Return switch.

Touch operation
When in the air conditioner error code display screen, tap the Enter symbol to go to the vehicle past error code display screen. If multiple error codes are displayed, tap the error code to be displayed.

Dial operation
When in the air conditioner error code display screen, press the dial to go to the vehicle past error code display screen. If multiple error codes are displayed, use the dial to select the error code to be displayed.

• Engine past error code display screen

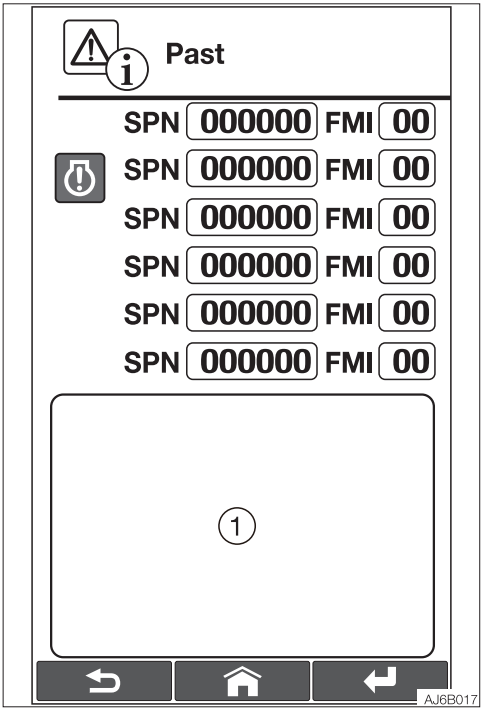

To return to the Menu screen, tap the Return symbol or press the Return switch.

Touch operation
When in the vehicle past error code display screen, tap the Enter symbol to go to the engine past error code display screen. If multiple error codes are displayed, tap the error code to be displayed.

Dial operation
When in the vehicle past error code display screen, press the dial to go to the engine past error code display screen. If multiple error codes are displayed, use the dial to select the error code to be displayed.