SWITCHING IMAGES

- Changing the background color (day/night)

Day

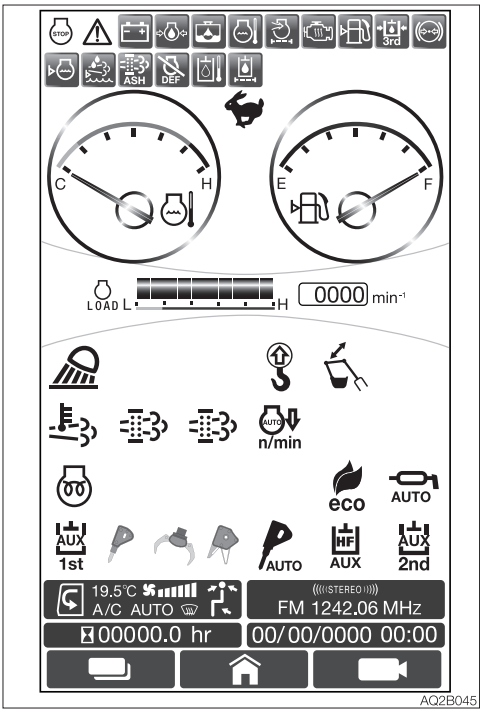

Night



Turn on the light switch on any screen to decrease the display brightness and to enter the night mode.

MEMO

MULTI-INFORMATION DISPLAY (CANOPY)

HOME SCREEN

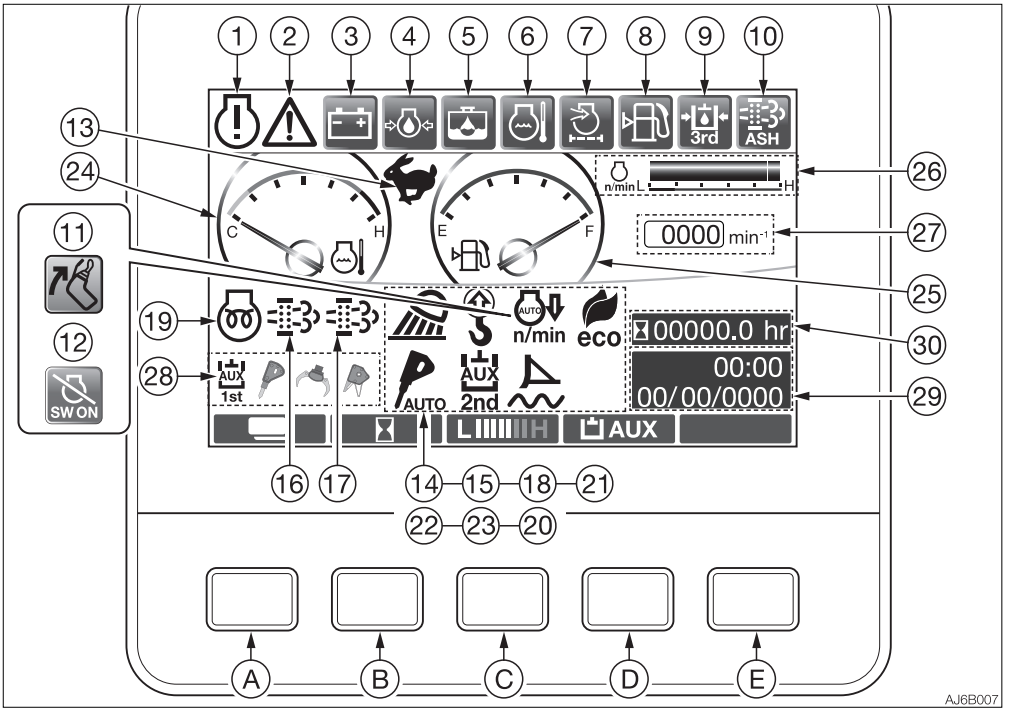

For explanation purposes, all lamps on this page are in the lit condition. This screen image is quite different from that of the real operation. In the actual operation, if a warning is given or any function is selected, the corresponding symbol appears enlarged at the center of the display for approx. one second.

Two seconds after the opening screen is displayed, the Home screen appears. The battery charge warning lamp, the engine oil pressure warning lamp and the third auxiliary hydraulic warning lamp start flashing. The machine system is normal if the lamps turn off after the engine is started.

WARNING LAMPS

IMPORTANT: If a warning lamp flashes and an alarm is sounded, immediately stop all operations and check the corresponding component.
Refer to “If a warning lamp flashes” on pages 6-12 to 6-14.

1. ECM error warning lamp


AJ6B012

This warning lamp flashes if the Electronic Control Module (ECM) detects an engine problem while the starter switch is in the ON position. The problem detected is recorded as an ECM error.
Refer to “Engine error code list” on pages 6-18 to 6-23.

2. Vehicle and engine emergency lamp
This lamp is displayed enlarged for one second, and then flashes and an alarm sounds if there is a problem with the machine. Go to the Error code display from the Menu screen, get the vehicle or engine error code number, and consult your sales or service dealer referring to the “Vehicle error code list” or “Engine error code list” in this manual.
Refer to “Menu screen” on page 2-64.
Refer to “(7) Error code display” on page 2-77.
Refer to “Vehicle error code list” on pages 6-16 to 6-17.
Refer to “Engine error code list” on pages 6-18 to 6-23.

3. Battery charge warning lamp
This lamp flashes and an alarm is sounded if a problem rises in the charging system while the engine is running.

4. Engine oil pressure warning lamp
This lamp flashes and an alarm is sounded if the lubricant oil pressure abnormally low while the engine is running.

5. Water separator warning lamp
This lamp flashes if water is detected within the water separator while the starter switch is in the ON position.

6. Coolant temperature warning lamp
This lamp flashes and an alarm is sounded if the engine coolant temperature becomes abnormally high while the engine is running.

7. Air cleaner warning lamp
This lamp flashes and an alarm is sounded if the air cleaner filter is clogged while the engine is running.

8. Fuel level warning lamp
This lamp flashes when the fuel level is low while the starter switch is in the ON position.

9. Third auxiliary hydraulic warning lamp
This lamp starts flashing and an alarm sounds if the fixed side (left “e”) pressure of the auxiliary 3rd drops abnormally while the engine is running, or while the quick-hitch is being removed or installed.

10. NCD warning indicator/ Ash accumulation amount warning indicator

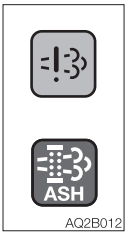

..... NCD warning indicator:
This lamp flashes and an alarm is sounded if the NOx control detects any error.
NCD: NOx Control Diagnostic system

.... Ash accumulation amount warning display:
This lamp flashes if the DPF needs cleaning; the alarm is sounded when the engine is started.
If this happens, contact your sales or service dealer for help with service.
Clean the DPF (maintenance every 6000 hours). If the machine continues operating for 200 hours more without maintenance, the engine output will be reduced by 50%.
Refer to “Cleaning the DPF” on page 5-69.

11. Safety start warning lamp

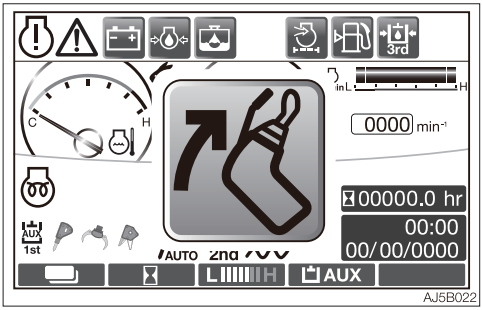

AJ5B022

This lamp appears enlarged on the display and the buzzer sounds if the engine is started when the safety lock lever is in the unlock position. The engine cannot be started. First, set the safety lock lever to the lock position, and then start the engine.

12. Engine shutdown switch warning lamp

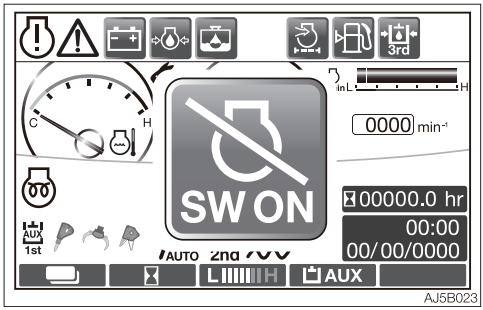

AJ5B023

This warning lamp appears enlarged on the display and an alarm sounds if the engine is started when the engine shutdown switch is ON. The engine cannot be started. First, turn off the engine shutdown switch, and then start the engine.

INDICATORS

13. Travel speed indicator lamp

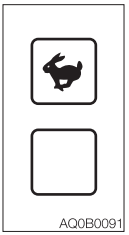

..... High-speed travel

..... Low-speed travel

This lamp turns on when the travel speed button is set to the 2nd (high) speed.

14. Working light indicator



..... Turns on when the boom light, front light and switch lamps are turned on.

..... **(Machines with LED package 2)**
Turns on when the boom light, front light, rear light and switch lamps are turned on.

15. Lift overload warning indicator lamp

This lamp turns on when the lift overload warning switch is turned on.

16. DPF manual regeneration under way/ regeneration promoting indicator lamp

The indicator starts flashing and an alarm starts sounding, if the accumulated PM exceeds the limit amount on the DPF. Immediately perform the manual DPF regeneration.
Refer to “DPF manual regeneration switch/DPF inhibit regeneration switch” on page 2-86.

17. DPF auto regeneration/inhibit indicator lamp

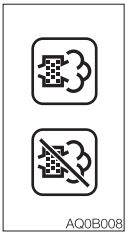

..... DPF auto regeneration under way

..... DPF auto regeneration inhibit

DPF auto regeneration under way
The DPF regeneration is automatically performed by the engine, when certain criteria are met. The operator only has to check the display.

DPF auto regeneration inhibit
The DPF manual regeneration inhibit symbol appears on the display when the DPF manual regeneration under way or the DPF auto regeneration under way is cancelled.
Refer to “DPF manual regeneration switch/DPF inhibit regeneration switch” on page 2-86.

18. Deceleration indicator lamp

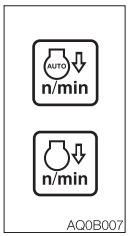

..... Automatic deceleration indicator

..... Deceleration indicator

Automatic deceleration indicator
This lamp turns on when the automatic deceleration is selected by the ON/OFF setting and remains lit while in the deceleration mode.
Refer to “ON/OFF setting” on page 2-76.

Deceleration indicator
This lamp turns on when the deceleration button is pressed. The lamp lights up to indicate that the engine is in the deceleration mode at low idling speed.
Refer to “Deceleration button” on page 2-82.

19. Glow indicator lamp
This indicator lamp turns off when the engine preheating is completed.

20. Dozer blade float indicator lamp (If applicable)



This lamp lights up when the float switch on the blade lever is pressed.

21. ECO mode indicator lamp
This lamp lights up when the ECO mode switch is pressed. The machine drives with reduced RPM for lower fuel consumption, without compromising workability.

22. Auxiliary 1st one-way (one-way circuit) indicator lamp



..... Auxiliary 1st auto tank is selected.

..... Auxiliary 1st one-way is selected.

No display: ... Two-way (two-way circuit) is selected.

23. Auxiliary 2nd/4th select indicator lamp

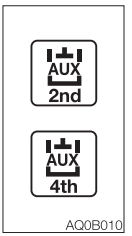

..... Auxiliary 2nd is selected.

..... Auxiliary 4th is selected.

24. Water temperature gauge
Indicates the temperature of the engine coolant water. The indicator level must be within the green range during machine operation. The red range indicates overheating.

25. Fuel gauge
Indicates the amount of fuel in the tank. Be sure to fill up the tank before running out of fuel.

26. Throttle opening position indicator

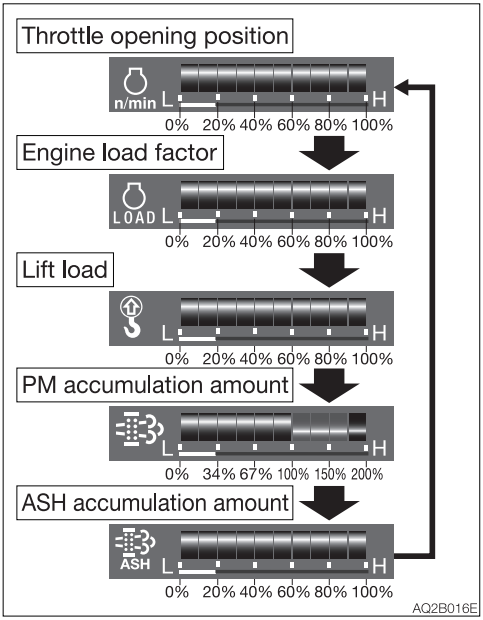

While in the Home screen, press the button (C) (bar meter key) to switch the display from the throttle opening position to engine load factor, lift load factor, PM accumulation amount and ASH accumulation amount.

- The lift load factor is displayed if there is no change in the throttle opening position for five seconds after the lift alarm switch is turned on.
- The throttle opening position is displayed if it is increased/decreased by at least 5%.

Throttle opening position
Displays the throttle opening position by adjusting the dial.

Engine load factor
Displays the engine load factor.

Lift load factor
Displays the lift load factor.

PM accumulation amount
Displays the estimated amount of particulate matter (PM) accumulated.
When the PM (particulate matter) accumulation amount exceeds a certain level, the DPF manual regeneration symbol starts flashing on the display and the alarm starts sounding. Perform the DPF manual regeneration.
Refer to “DPF manual regeneration switch/ DPF inhibit regeneration switch” on page 2-86.

ASH accumulation amount
Displays the ASH accumulation amount.
When the ASH accumulation amount exceeds a certain level in the DPF, the ASH accumulation warning indicator starts flashing and the alarm starts sounding. Clean the DPF.
Refer to “Cleaning the DPF” on page 5-69.

27. Actual engine RPM
Displays the actual engine RPM.

28. Auxiliary 1st flow rate indicator lamp
This lamp lights up to indicate which flow rate setting is selected in the auxiliary 1st.

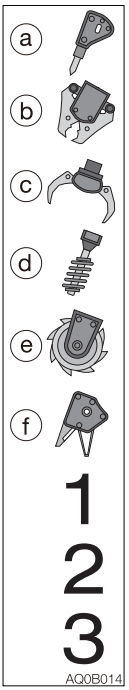

..... a Flow rate setting 1
..... b Flow rate setting 2
..... c Flow rate setting 3
..... d Flow rate setting 4
..... e Flow rate setting 5
..... f Flow rate setting 6
..... 1 Flow rate setting 7
..... 2 Flow rate setting 8
..... 3 Flow rate setting 9

Refer to “Auxiliary 1st flow rate setting” on page 2-72.

29. Date and time indicator
Displays the date and time set.
Refer to “Date and Time setting” on page 2-69.

30. Hour meter/Trip meter
• Hour meter

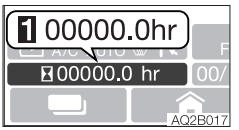

Displays the total engine running time in hours.
The rightmost digit indicates tenths of hours (6 minutes).
Set the inspection and maintenance intervals according to the time displayed on the hour meter.

• Trip meter
Three patterns of desired operating hours can be displayed.
Refer to “Trip meter setting” on page 2-65.

SCREEN CONTROL KEY

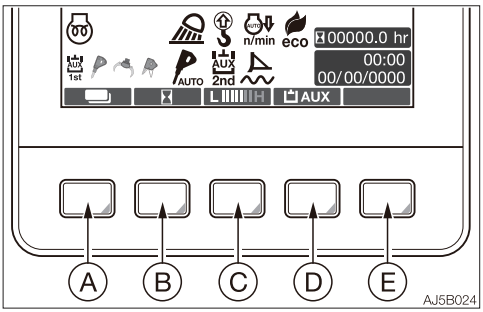

Note: Do not press the symbol keys on the display. The LCD could be damaged if the symbol keys are pressed hard. For actual operation, press the push button keys located at the bottom of the screen.

A. Menu key

Use this key to switch between the Home screen and the Menu screen. This key is also used to cancel changes made in each setting. The screen returns to the Home screen if this key is pressed in the information screen.

B. Hour meter key

This hour meter symbol is displayed in the initial screen. Pressing this key changes the meter display in the following order. Trip meter 1, Trip meter 2, Trip meter 3, Hour meter.

Down (↓) key
Use this key to move the cursor ▶ downward and to decrease the value in each setting. Press and hold this key for one second to rapidly decrease the value.

C. Bar meter key

This bar meter symbol is displayed on the initial screen. Pressing this key changes the meter display in the following order. Throttle opening position, Lift load factor, PM accumulation amount

Up (↑) key
Use this key to move the cursor ▶ upward and to increase the value in each setting. Press and hold this key for one second to rapidly increase the value.

D. Auxiliary 1st key

The auxiliary 1st symbol is displayed in the initial screen. Pressing this key changes the symbol display in the following order. Auxiliary 1st setting 1, Auxiliary 1st setting 2, Auxiliary 1st setting 3.

Enter key
Use this key to confirm or execute the setting made by each key.
To clear the trip meter being displayed, press and hold this key for three seconds.

E. —

SCREEN NAVIGATION

• Menu screen

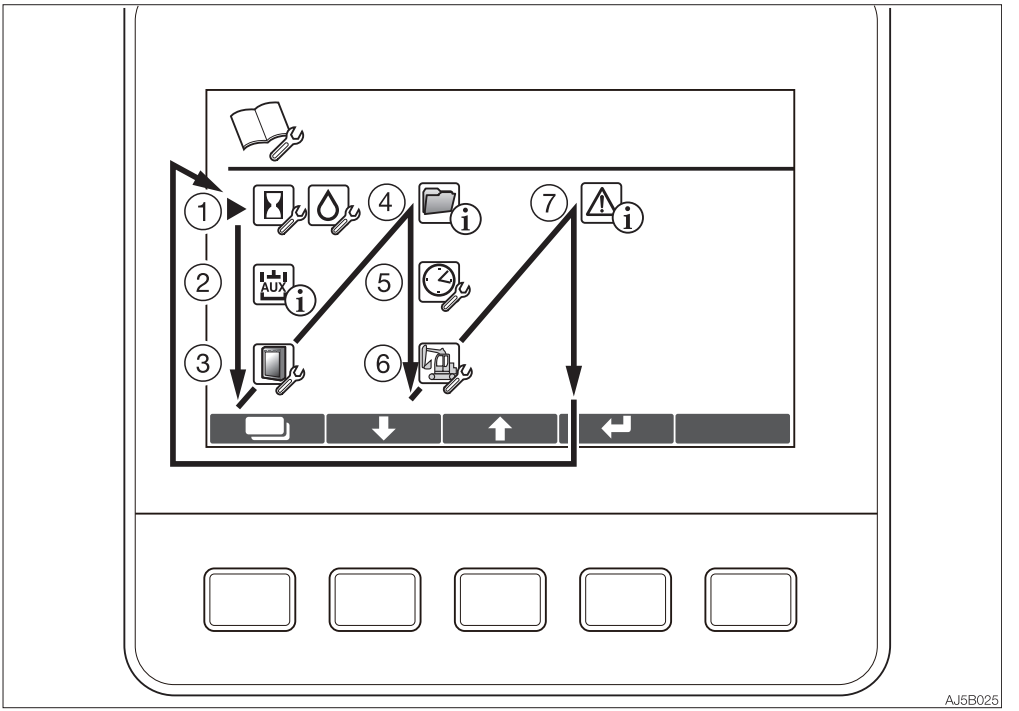

Press the Menu key to go the Menu screen while in the Home screen.

(1) Trip meter setting
(2) Auxiliary line flow rate display
(3) LCD setting
(4) Data display
(5) Date and time setting
(6) Machine setting
(7) Error code display
Move the cursor ▶ with the Up (↑) or Down (↓) key to go to the desired item to be set, and then press the Enter key to confirm. The screen returns to the Home screen if the Menu key is pressed on the Menu screen.
The wrench symbol indicates the “setting is possible state” and the (i) mark indicates information only.

(1) TRIP METER SETTING

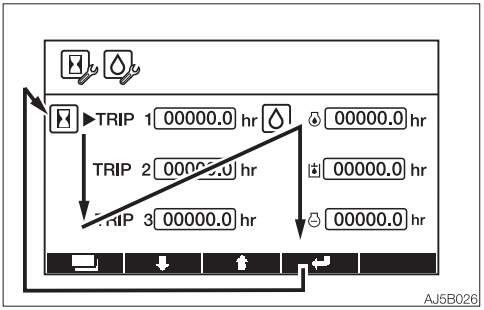

Six patterns of desired operating hours can be set.
Press the Menu key to return to the Menu screen.
Move the cursor ▶ with the Up (↑) or Down (↓) key, and press and hold the Enter key for three seconds to clear the flashing trip meter pointed by the cursor.

(2) AUXILIARY LINE FLOW RATE DISPLAY

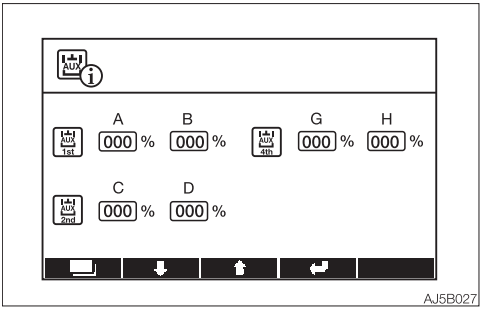

Displays the flow rate of the Auxiliary 1st, 2nd and 4th.
The flow rate cannot be changed.

(3) LCD SETTING

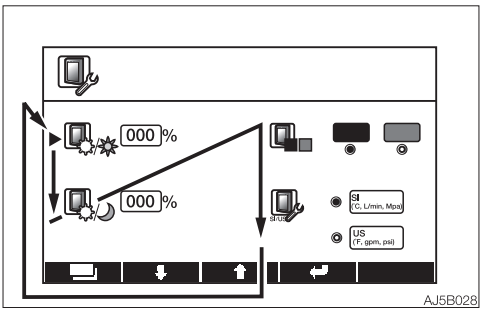

The display settings can be changed. Use the UP (↑) or Down (↓) key to move the cursor ▶.
Press the Menu key to return to the Menu screen.

• **Brightness setting**

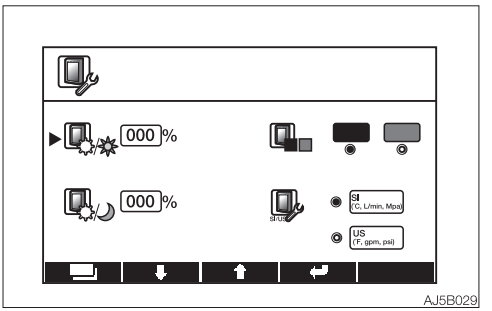

The brightness of the LCD is set to between 1 and 100%.
The brightness changes each time the adjustment is made.
Pressing the Enter key upon selecting the brightness setting symbol causes the value to flash for editing. To cancel editing, press the Menu key.
Use the Up (↑) or Down (↓) key to change the value, and then press the Enter key to complete editing.
Adjustment to the night (day) mode while in the day (night) mode cannot be synchronized.
For the key operations, refer to “Screen control key” on page 2-63.

• Background color setting

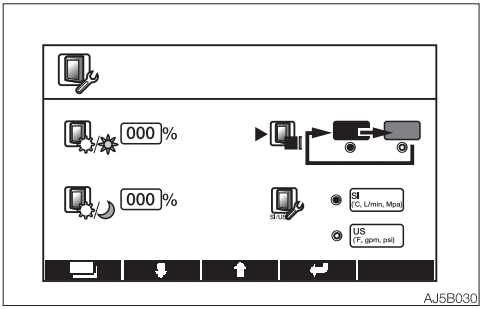

Move the cursor ▶ to the background color symbol, and then press the Enter key.
Press the Enter key to select the desired color.
In this screen, you can change the day mode background color. (The color for the night mode is fixed as black.)

• Unit setting

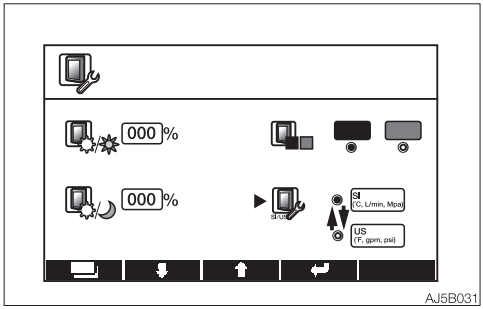

Move the cursor ▶ to the unit setting symbol, and then press the Enter key.
Press the Enter key to select the desired unit.

(4) DATA DISPLAY

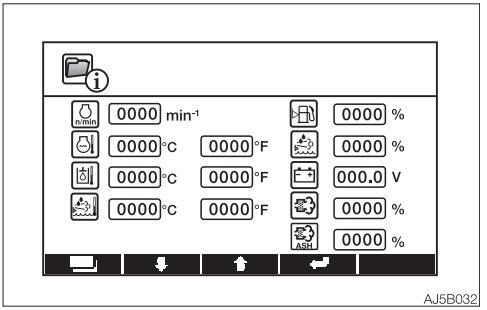

Displays various data. The setting cannot be changed.

Display items
- Engine RPM
- Coolant temperature
- Hydraulic oil temperature
- DEF/AdBlue® temperature
- Fuel level
- DEF/AdBlue® level
- Battery voltage
- PM accumulation amount
- Ash accumulation amount

Note: For the data item not applicable to this machine, N/A is displayed.

(5) DATE AND TIME SETTING

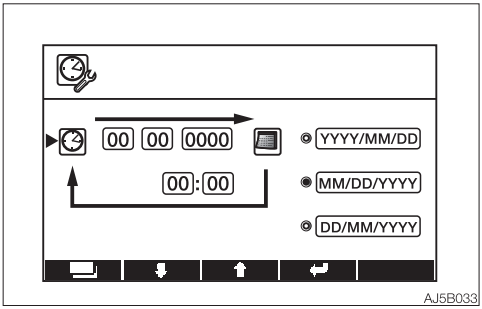

The year, month, date, hour and minute can be set. (Effective year range: 2019 to 2100)

• **Date/Time setting**

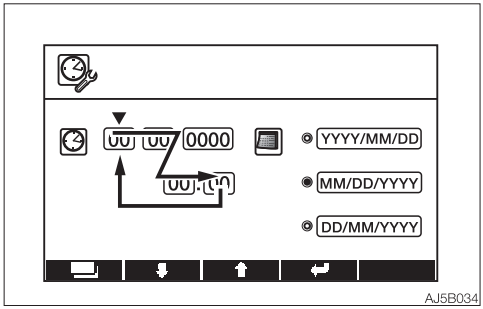

Move the cursor ▶ to the clock symbol, and then press the Enter key. The cursor ▼ will be shifted to the place for setting the year.
Press the Enter key again, and then enter the year. (The year display keeps flashing during editing.)
Press the Enter key to confirm. The month, date, hour and minute can be set using the same procedure for the year.

• **Date/Time display format**
Move the cursor ▶ to the calendar symbol, and then press the Enter key to change the format of “Year-Month-Date” to “Date-Month-Year” or “Month-Date-Year”.
For the key operations, refer to “Screen control key” on page 2-63.

(6) MACHINE SETTING

• **Machine setting screen**

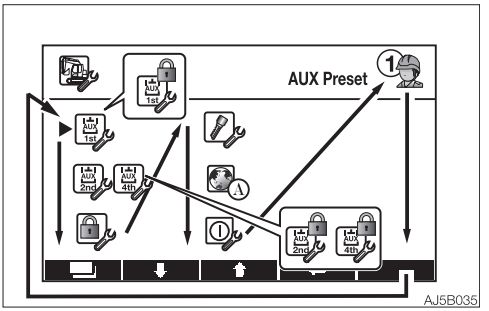

The settings made to the machine can be changed. Move the cursor ▶ with the Up (↑) or Down (↓) key to go to the desired item to be set, and then press the Enter key to confirm.
To return to the Menu screen, press the Menu key.

Note: When the auxiliary flow rate locking is set to “enabled”, the “Lock” symbol is added to the upper right of the “auxiliary flow rate setting” symbol.
You are requested to enter the password when setting the auxiliary flow rate, locking/unlocking the auxiliary flow rate or changing the password.
Note: When the auxiliary flow rate locking is set to disabled, the lock symbol is not displayed.

• Preset patterns

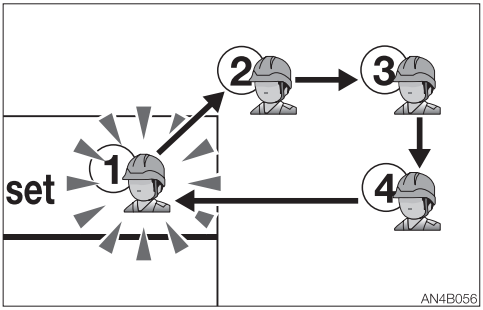

Four setting patterns can be made in the auxiliary 1st and 2nd/4th.
You can also set a password for each pattern.
While in the machine setting screen, select the face symbol in the upper right of the screen, and then press the Enter key to select the desired pattern.

• Requesting password screen

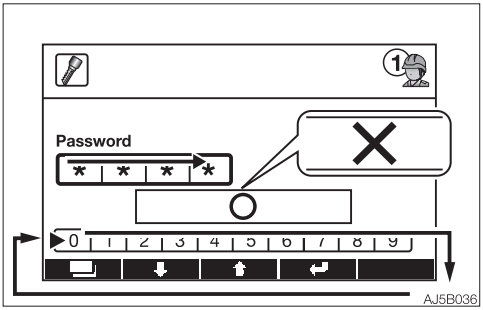

When the “closed-lock” symbol is displayed, it is necessary to enter the password to set the auxiliary flow rate, lock/unlock the auxiliary flow rate or change the password. Move the cursor ▶ with the Up (↑) or Down (↓) key, and press the Enter key to enter a 4-digit number password. Enter the existing password. If it is correct, “OK” will be displayed followed by the setting screen. If it is not, “NG” will be displayed followed by the machine setting screen.
It is not necessary to enter the password again unless you want to change it or until you turn the ignition switch to OFF.

1. Auxiliary 1st flow rate setting

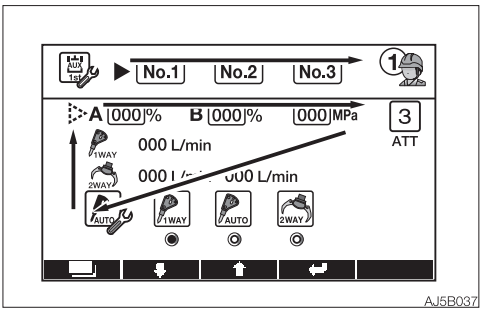

AJ5B037

The three patterns shown on the display can be selected from the Home screen.
To return to the machine setting screen, press the Menu key.
Use the Up (↑) or Down (↓) key to move the cursor to select the pattern number to be set, and then press the Enter key to display the field.
Select the item to be set and press the Enter key.
The numeric value starts flashing to indicate that it is ready to be edited.
Use the Up (↑) or Down (↓) key to change the value, and then press the Enter key again to complete editing.

Note: Changing the preset pressure is an optional function, and so it may not be available depending on the machine used. If the function is not available, the pressure is displayed as “N/A”.

Initial condition	Standard flow	Variable range
No.1	100% = 92 L/min (24.3 US gpm)	10 to 100%
No.2	75% = 69 L/min (18.2 US gpm)	10 to 100%
No.3	50% = 46 L/min (12.2 US gpm)	10 to 100%

The table shows the 1-way flow rate when there is no load.

Note: The 1-way flow can be performed only when the switch (A) is used.

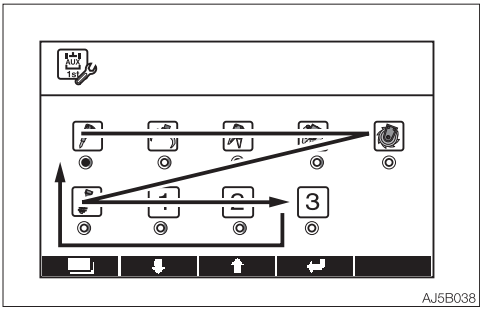

AJ5B038

Pressing the Enter key while the cursor ▶ is at “ATT” goes to the attachment select screen.
Pressing the Down (↓) key moves the cursor ◉ in the direction of the arrow.
Use the Up (↑) key to move the cursor ◉ in the opposite direction of the arrow.
Move the cursor ◉ to the desired symbol or the number, and then press the Enter key to confirm.
The selected symbol will appear at the lower left of the Home screen.

• **Flow selection**

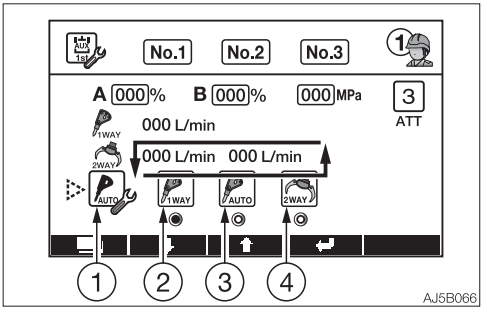

Use this symbol to change the direction of hydraulic oil flow in the Aux. 1st line.

(1) Current setting
(2) One-way flow (When using a hydraulic breaker)
(3) Auto tank (The one-way flow can be set only when the button “A” of the Aux. 1 is pressed. The tank circuit is automatically opened.)
(4) Two-way flow (When using a reversible attachment)

Use the Up (↑) or Down (↓) key to move the cursor to select the pattern number to be set, and then press the Enter key to display the field.
Select the current setting symbol and press the Enter key.
The numeric value starts flashing to indicate that it is ready to be edited.
Use the Up (↑) or Down (↓) key to move the cursor to select the setting to be selected, and then press the Enter key to complete editing.

2. Auxiliary 2nd/4th flow rate setting

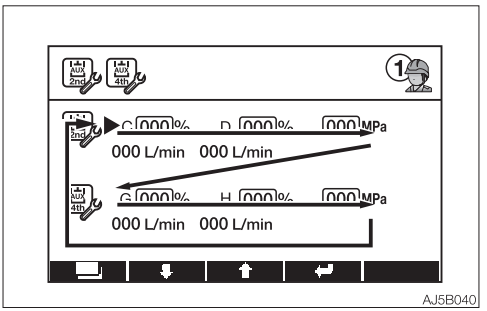

One pattern of the auxiliary 2nd/4th flow rate can be set.

Note: Changing the preset pressure is an optional function, and so it may not be available depending on the machine used. If the function is not available, the pressure is displayed as “N/A”.

Select the item to be set and press the Enter key.
The numeric value starts flashing to indicate that it is ready to be edited.
Use the Up (↑) or Down (↓) key to change the value, and then Press the Enter key again to complete editing.

Initial condition	C/D, G/H common, standard flow	Variable range
Auxiliary 2nd	C/D 100% = 41 L/min (10.8 US gpm)	10 to 100%
Auxiliary 4th	G/H 100% = 41 L/min (10.8 US gpm)	10 to 100%

The table shows the 1-way flow rate when there is no load.

3. Setting the auxiliary flow rate locking

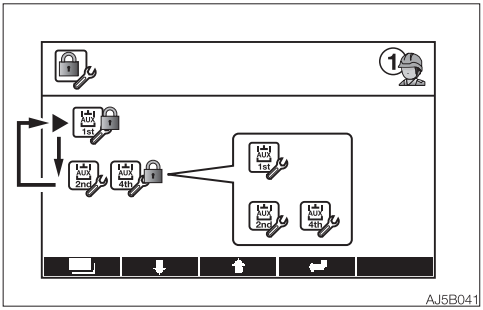

It is possible to request the user to enter a password when setting the auxiliary flow rate.
To return to the machine setting screen, press the Menu key.
Use the Up (↑) or Down (↓) key to move the cursor ▶, and then press the Enter key to turn on or off the “Lock” symbol.
Lock symbol is lit: Locked
Lock symbol is off: Unlocked
Note: If the password is set to “0000”, the auxiliary flow rate locking cannot be set to “enabled”.
Upon setting the locking to “enabled”, the screen asking for the password appears every time the ignition switch is turned to OFF or the password is changed.

4. Changing the password

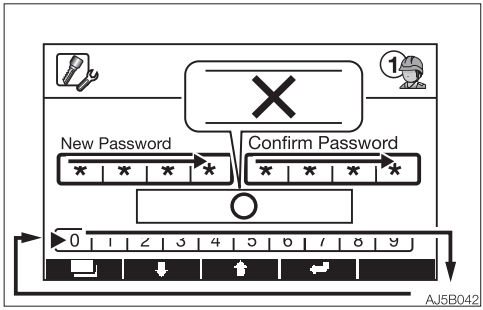

The password can be changed. Use the Up (↑) or Down (↓) key to move the cursor ▶ to the password field, and then press the Enter key to enter a 4-digit number password.
Once the password is entered, the display of “New Password” is change to “Confirm Password”.
The password change is successful when “Complete” appears after entering the same password for confirmation. If the password reentered does not match the one entered earlier, the notification of “Failed” appears asking for entering the password again in the first entry field.
To cancel editing, press the Menu key.
Note: If the password is set to “0000”, the auxiliary flow rate locking cannot be set to “enabled”.

5. Language selection

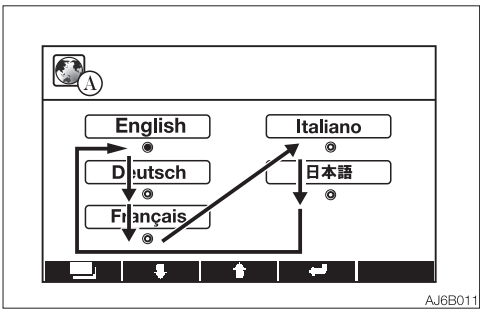

The language used can be selected.
To return to the machine setting screen, press the Menu key.

Use the Up (↑) or Down (↓) key to select the desired language, and then Press the Enter key to complete the selection.

6. ON/OFF setting

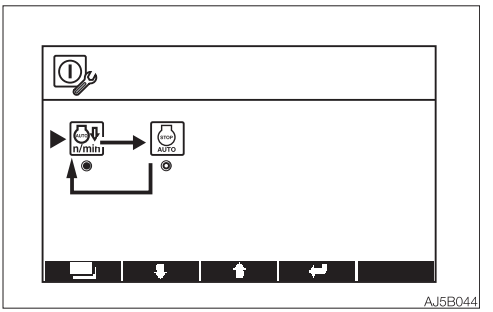

You can set the automatic deceleration and the engine auto stop to ON or OFF.
To return to the machine setting screen, press the Menu key.

Use the Up (↑) or Down (↓) key to select the item to be ON or OFF and press the Enter key to confirm.

◉ On: ON
◉ Off: OFF

(7) ERROR CODE DISPLAY

- **Vehicle error code/ECM error code display screen**

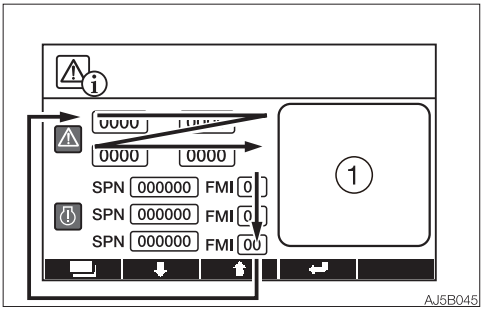

⚠.....Vehicle error code
Displays four error codes, with the latest code in the upper left.
Refer to “Vehicle error code list” on pages 6-16 to 6-17.

.....ECM error code
Engine ECM (Engine Control Module) error code
Displays three error codes, with the latest code at the top.
Refer to “Engine error code list” on pages 6-18 to 6-23.

On the description screen (1), description of each error code is displayed.

If multiple error codes are displayed, use the UP (↑) or Down (↓) key to select the error code to be displayed.

IMPORTANT: If an error code appears, immediately stop the operation and contact a Takeuchi sales or service outlet for help.

• **Vehicle past error code display screen**

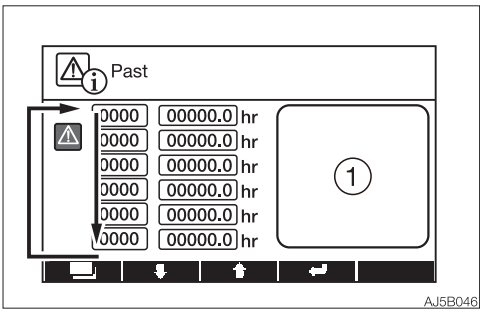

To return to the Menu screen, press the Menu key.

In the vehicle error code/ECM error code screen, press the Enter key to go to the vehicle past error code screen.
If multiple error codes are displayed, use the Up (↑) or Down (↓) key to select the error code to be displayed.

• **Engine past error code display screen**

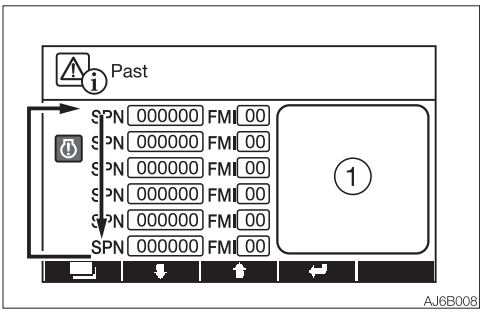

To return to the Menu screen, press the Menu key.

In the vehicle past error code display screen, press the Enter key to go to the engine past error code display screen.
If multiple error codes are displayed, use the Up (↑) or Down (↓) key to select the error code to be displayed.

SWITCHING IMAGES

- **Changing the background color (day/night)**

Day

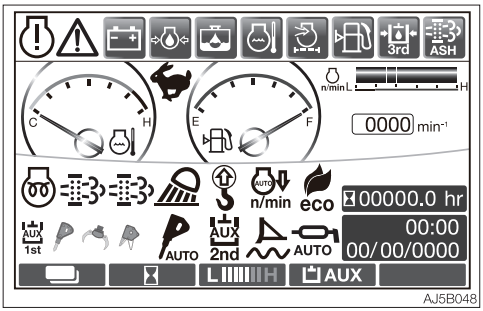

AJ5B048

Night



AJ5B049

Turn on the light switch on any screen to decrease the display brightness and to enter the “night mode”.

SWITCHES

STARTER SWITCH

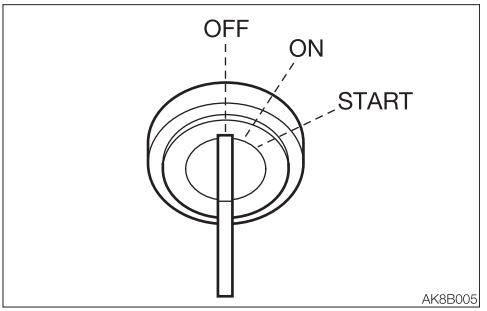

IMPORTANT: Do not repeatedly switch the key from OFF to ON and ON to OFF over a short period. Doing so will cause engine breakdown.

OFF ..... Position for stopping the engine and inserting or removing the key.
ON ..... Position in which the engine is running. At this position, all the electrical equipment is functional. When the coolant temperature is too low, the engine is automatically preheated.
START ..... Position for starting the engine. When the key is released, the switch automatically returns to the ON position.

ENGINE SHUTDOWN SWITCH

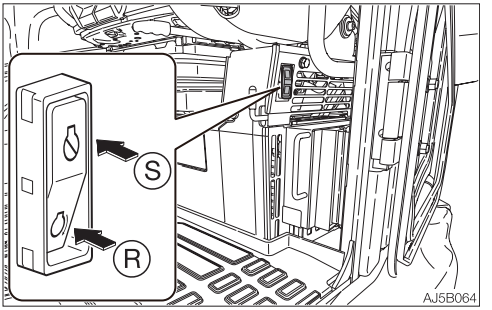

This switch is used to shutdown the engine if it fails to stop, due to machine failure or breakage, when the starter switch is set to the OFF position.

1. Press the stop symbol side (S) of the switch.
   The engine stops.
2. After use, press the turn symbol side (R) to reset the switch.

DIAL

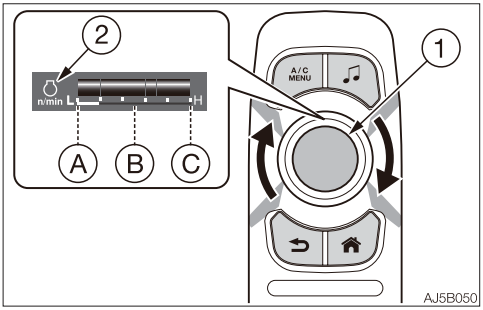

The dial (1) is used to control the engine RPM. Turning the dial clockwise increases the engine RPM, and turning it counterclockwise decreases the engine RPM. For the engine RPM, check the gauge (2) on the throttle opening position display.
(A).....Low idling
(B) .....Medium speed
(C) .....Maximum speed

HORN BUTTON

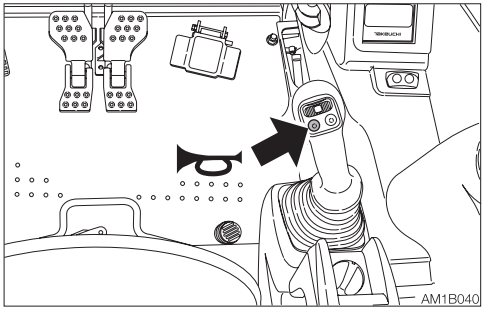

Press the button situated on the right operating lever to blow the horn.

DECELERATION BUTTON

⚠ WARNING

Before operating the deceleration button, set the operating lever to the neutral position and take your foot off the pedals. If the deceleration button is pressed while driving, the machine's operating speed will abruptly change to result in a dangerous situation.

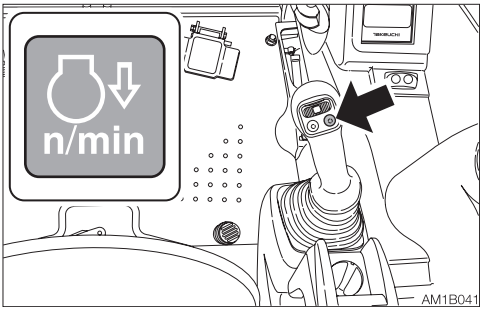

Press this button on the right operating lever to lower the engine speed to low idling. Press the button again to return to the engine RPM set with the dial.
For safety reasons, it is designed that the deceleration function is activated to set the engine revolutions to low idling whenever the engine is started.
Cancel the deceleration mode by pressing the deceleration button as necessary.

Note: This deceleration button is capable of decreasing the engine speed and reducing the fuel consumption, with a simple operation, in a situation such as when little engine output is required and thus the operating or the travel levers are in neutral.

TRAVEL SPEED BUTTON

⚠ WARNING

When a load greater than a set value is applied during traveling in 2nd (high) speed, the speed will automatically slow down to 1st (low) speed. When the load becomes lighter, the speed will increase and return to 2nd (high) speed. It should be noted that the travel speed changes depending on the load condition (for machines with the automatic travel shift-down system).

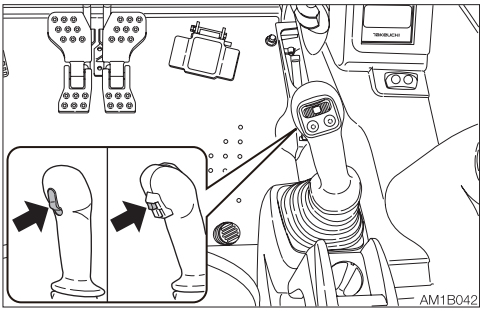

Press this switch to set the travel speed to 2nd (high) speed. Press it again to return to 1st (low) speed.

AUXILIARY 1ST SWITCHES

Auxiliary hydraulic buttons

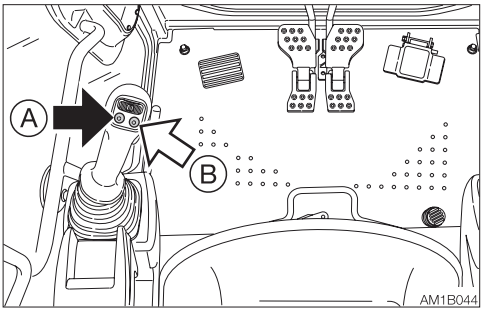

Press those buttons to control the flow of the oil in the first auxiliary hydraulic lines.

- Proportional control of the auxiliary hydraulic circuit is not possible.

(A).....Hydraulic oil flows to the left auxiliary line (a).

(B) .....Hydraulic oil flows to the right auxiliary line (b).

Slider switch (Proportional control)

Proportional control allows for slow-to-fast/ fast-to-slow movement of attachment. Example: If you move the slider switch half way, the attachment will move at approximately one-half the speed.

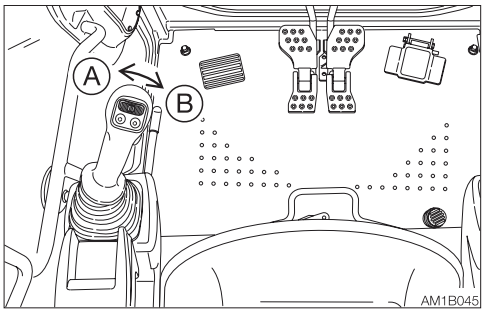

Move this switch to control the flow of the oil in the first auxiliary hydraulic lines.

(A).....Hydraulic oil flows to the left auxiliary line (a).

(B) .....Hydraulic oil flows to the right auxiliary line (b).

Refer to “Auxiliary hydraulic lines (If applicable)” on pages 2-122 to 2-128.

AUXILIARY 2ND/4TH SWITCH (IF APPLICABLE)

Slider switch
(Proportional control)
Proportional control allows for slow-to-fast/ fast-to-slow movement of attachment.
Example: If you move the slider switch half way, the attachment will move at approximately one-half the speed.

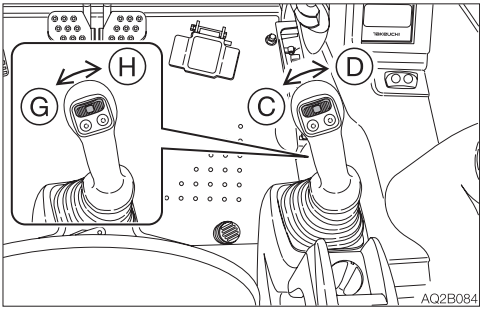

Move this switch to control the flow of the oil in the second auxiliary hydraulic lines.
(C): .....Hydraulic oil flows to the left auxiliary line (c).
(D): .....Hydraulic oil flows to the right auxiliary line (d).
(G): .....Hydraulic oil flows to the left auxiliary line (g).
(H): .....Hydraulic oil flows to the right auxiliary line (h).

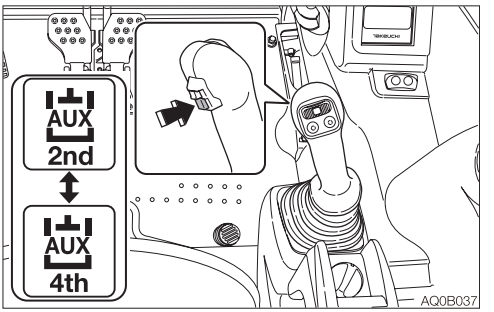

To use the auxiliary 4th hydraulic line, press the auxiliary 2/4 select button to change to the operation of the auxiliary 4th.
Refer to “Auxiliary hydraulic lines (If applicable)” on pages 2-122 to 2-128.

THIRD AUXILIARY HYDRAULIC SWITCH AND BUTTON (IF APPLICABLE)

Refer to “Third auxiliary hydraulic switch and button (If applicable)” on page 2-126.

AUXILIARY 2/4 SELECT BUTTON (IF APPLICABLE)

Refer to “Auxiliary 2/4 select button (If applicable)” on page 2-128.

DPF MANUAL REGENERATION SWITCH/ DPF INHIBIT REGENERATION SWITCH

⚠ WARNING

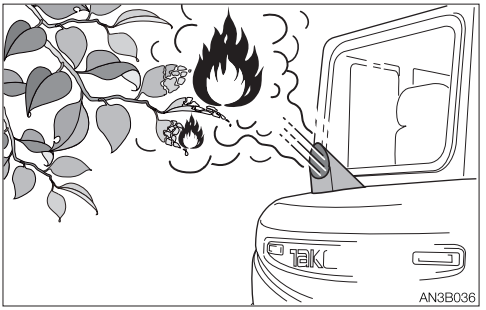

- The DPF and the exhaust gas emitted from the exhaust line can be very hot while the engine is running or the regeneration is under way, as well as immediately after the engine is stopped. Be careful not to accidentally touch them; doing so could cause burns.
- Do not perform the DPF regeneration if the machine is surrounded by flammable items such as plants, trees, dry grass, wastepaper, oil and waste tires. There is a risk of fire due to the high-temperature exhaust gas emitted from the DPF.
- Do not perform the DPF regeneration in poorly-ventilated indoor spaces, as smoke could be generated during the DPF regeneration or carbon monoxide poisoning could result.
- Do not perform regeneration when the engine hood is open. There is a risk of fire due to the high-temperature exhaust gas emitted from the DPF.

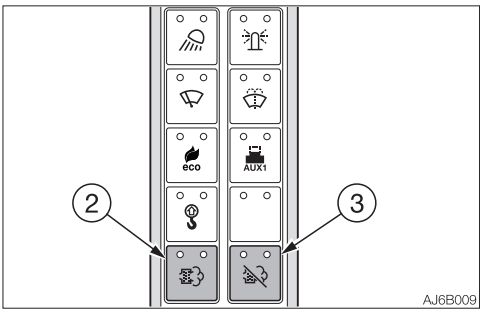

IMPORTANT: If the DPF manual regeneration lamp flashes and an alarm sounds, press the DPF manual regeneration switch to burn the particulate matter (PM). If the machine continues to be operated without performing manual regeneration, the engine power will decrease due to too much accumulation of PM and eventually the engine will stop running. The ECM warning indicator will also flash if the DPF needs to be repaired. A number appears on the engine error code screen. Refer to the "Engine error code list" and contact a Takeuchi sales or service dealer for repair.

- **DPF manual regeneration**
  When the DPF manual regeneration symbol on the display starts flashing and an alarm starts sounding, perform the DPF manual regeneration by following the procedure below.

1. Warm up the engine.
   Refer to "Warming up the engine" on page 3-8.
2. Park the machine in a safe place where there is no fire hazard.
3. Raise the safety lock lever to the lock position.
   · Do not lower the safety lock lever and move the control levers during regeneration. Doing so interrupts the regeneration.
4. Decrease the engine speed to low idling.
5. Press and hold the DPF manual regeneration switch (2).

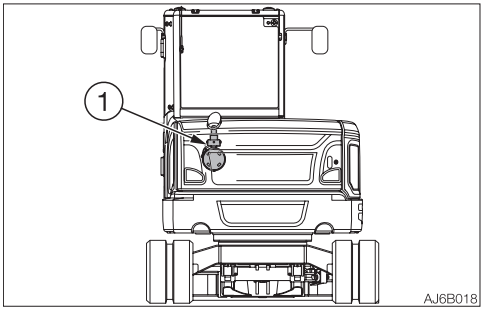

6. The manual regeneration symbol stops flashing and remains lit to indicate that the engine RPM is automatically increased and the DPF (1) regeneration (PM burning) has started.
7. Release the switch. Do not leave the machine during regeneration.
   It takes approximately 20 minutes, depending on the ambient temperature, to complete the regeneration operation.
8. The manual regeneration symbol goes off to indicate the end of manual regeneration.

Note:
- Since the exhaust gas is cleaned through the catalyst fitted inside the DPF, it has a smell different from that of the conventional diesel engine.
- In some cases smoke may be emitted from the tail pipe while the DPF regeneration is being performed. This is not a failure; it is due to burning of the particulate matter (PM).
- It is normal that a sound is produced when the DPF regeneration is started or completed; This is to adjust the air-intake throttle and EGR opening position.
- In some cases the noise associated with the DPF regeneration operation or cancel operation may change; this is not a failure.
- The DPF manual regeneration can be completed faster while the machine engine is warm rather than cold. Note that the manual regeneration does not start unless the coolant temperature is higher than a set value. The coolant temperature may increase while manual regeneration is being performed.
- Since the DPF regeneration is designed to work only when the accumulated particulate matter (PM) in the filter exceeds a certain amount, it will not start otherwise, even if you attempt to perform manual regeneration.

- **DPF inhibit regeneration (cancel)**
  To cancel the DPF regeneration currently being processed (manual or auto), press and hold the DPF inhibit regeneration switch (3) for four seconds.
  The DPF regeneration inhibit symbol appears on the display. In this case, regeneration operation must be performed again. Start the manual regeneration procedure from Step (1) above, as soon as possible. Do not press the DPF inhibit regeneration switch (3) unless there is a risk of fire.
  To cancel, press the switch again. Turning the starter switch to OFF will also cancel the operation.

Cab:
Refer to “DPF auto regeneration/inhibit indicator lamp” on page 2-25 and “DPF manual regeneration under way/regeneration promoting indicator lamp” on page 2-24.

Canopy:
Refer to “DPF auto regeneration/inhibit indicator lamp” on page 2-59 and “DPF manual regeneration under way/regeneration promoting indicator lamp” on page 2-58.

LIGHT SWITCH

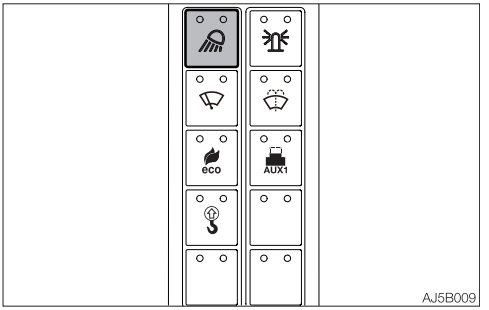

When this switch is turned while the starter switch is at ON, the lights turn on as follows:

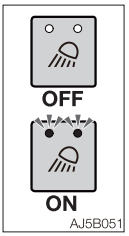

..... Off

..... Switch lamps and boom light will be lit. (switch lamp is lit)

Pressing this switch changes the on or off state of the lamps/lights.
(For details about the LED package 1 or LED package 2, refer to “LED lights” on page 8-46.)

WIPER SWITCH

IMPORTANT: If no washer fluid is discharged, do not operate the washer. Doing so may damage the pump.
IMPORTANT: Operating the wiper with no moisture on the windshield will scratch the glass. Use water or washer fluid when operating the wiper.
IMPORTANT: In cold climates, the wiper blade may freeze to the glass. Operating the wiper forcibly may damage the wiper motor.

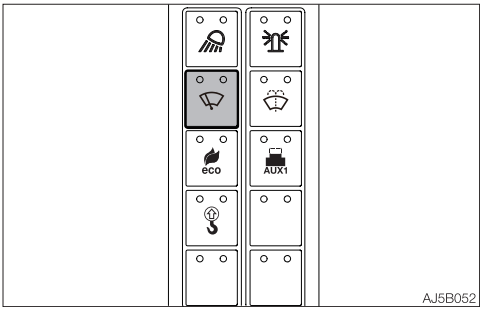

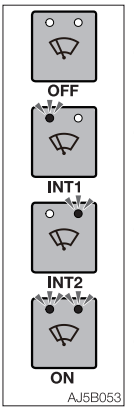

..... Off

..... Intermittent operation (6-sec. interval)

..... Intermittent operation (3-sec. interval)

..... Continuous operation

Pressing this switch changes the on or off state of the lamps/lights.

WASHER SWITCH

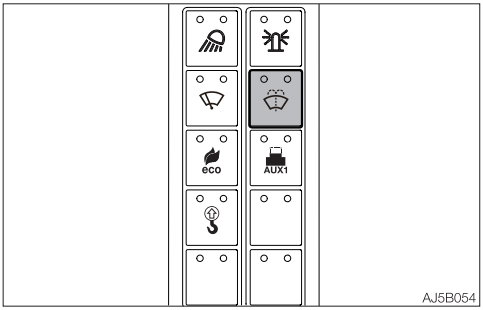

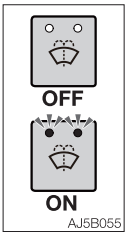

..... Off

..... Pressing the switch causes the washer to spray washer fluid. To stop spraying, release the switch.

ECO MODE SWITCH

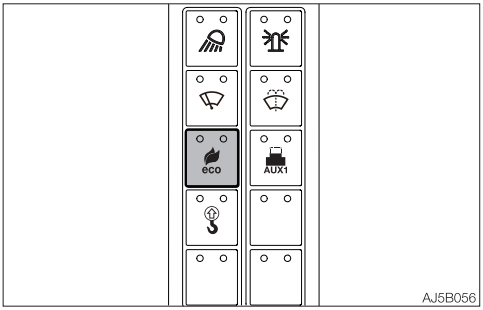

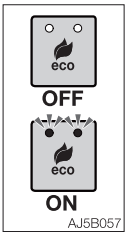

..... STD mode

..... ECO mode
Pressing this switch turns on the ECO mode indicator lamp on the multi-information display. The engine RPM and hydraulic horse power are set to economically optimal values to improve the fuel economy.
Refer to “ECO mode indicator lamp” on page 2-26 or 2-60.

Pressing this switch changes the on or off state of the lamps/lights.

DETENT MODE SWITCH (AUXILIARY 1ST)

IMPORTANT: Do not operate the machine in the detent mode for a long time. Doing so will increase the hydraulic oil temperature and shorten the service life of the hydraulic units.

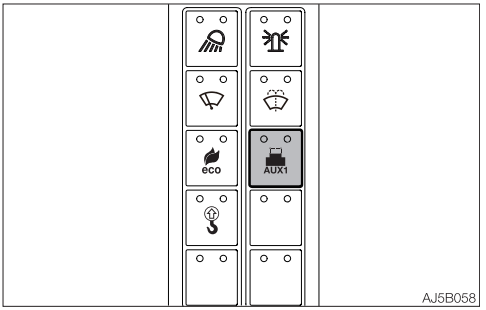

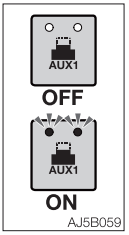

..... Momentary mode

..... Detent mode

Pressing this switch changes the on or off state of the lamps/lights.

LIFT OVERLOAD WARNING SWITCH

⚠ WARNING

If the overload is not removed after the overload warning horn is sounded, the machine may tip over or the emergency shut-off valve may be activated. If the horn starts sounding, stop operating the machine and lighten the load.

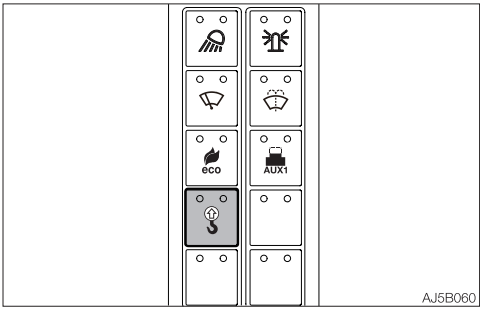

If a weight greater than the lifting capacity is applied or lifted, the overload warning device is activated and the horn sounds. (When the lift overload warning switch is turned on.)

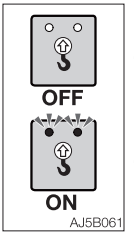

..... Off

..... On

Pressing this switch changes the on or off state of the lamps/lights.
IMPORTANT: The switch can be activated only on the machine equipped with an emergency shut-off valve.
Refer to “Lifting safety device (If applicable)” on page 2-130.

BEACON LAMP SWITCH

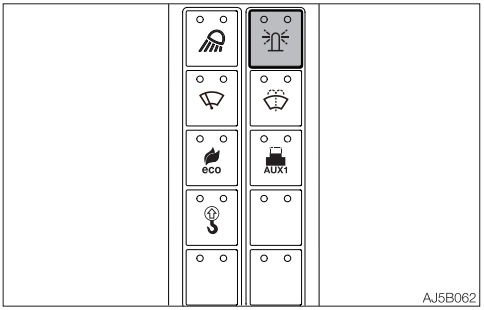

When this switch is turned on while the starter switch is at ON, the lamp turns on as follows:

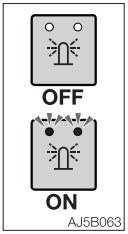

..... Off

..... Beacon lamp is lit

Pressing this switch changes the on or off state of the lamps/lights.

LEVERS AND PEDALS

SAFETY LOCK LEVER

⚠ WARNING

- **Before standing up from the operator's seat to open/close the window or remove/install the lower window, lower the working equipment to the ground, raise the safety lock lever to engage the lock and stop the engine. If any controls should be accidentally touched when the safety lock lever is lowered (unlocked), the machine will suddenly move and cause serious injury or death.**
- **Be careful not to touch the operating levers when raising or lowering the safety lock lever.**
- **Before leaving the operator's seat, lower the working equipment to the ground, raise the safety lock lever to engage the lock and stop the engine. Also, be sure to remove the key, lock the door and covers, take it with you and store it in a specified place.**

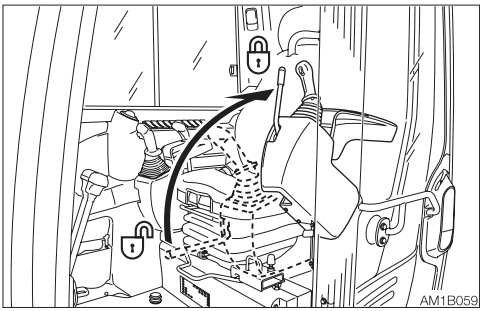

This device is for locking the operations of hoe attachment, slewing, auxiliary, dozer blade and traveling.
When the lever is raised, the lever stand springs up to lock the lever.

Safety start function
When the lever is in the unlock position, the engine cannot be started.

OPERATING LEVERS

⚠ WARNING

- **Before starting operation, carefully check which lever pattern you are going to use.**
- **It is described using the ISO pattern in this manual.**

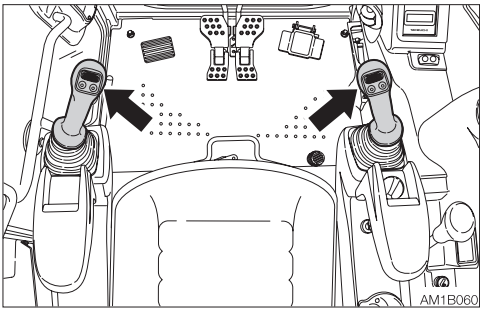

Use these levers to operate the boom, arm, bucket and upperstructure.
Refer to "Lever pattern" on pages 3-10 to 3-12.
Refer to "Operating the working equipment" on pages 3-22 and 3-23.

BLADE LEVER

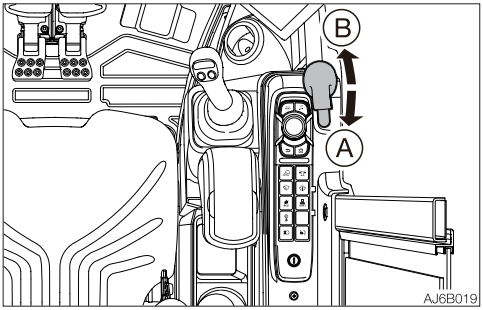

Use this lever to operate the dozer blade.
(A).....Blade up
(B) .....Blade down
Refer to “Operating the dozer blade” on page 3-23.

Float button (If applicable)

⚠ WARNING

- **Do not press the float button while the machine is raised by the blade. Doing so will cause the machine to fall. If you must work beneath the raised machine, always use a secure support to keep the machine raised.**
- **Do not press the float button while the blade is raised. Doing so will cause the blade to fall. Lower the blade to the ground before pressing the float button.**
- **Do not travel forward while the blade is in the float mode.**

Float operation

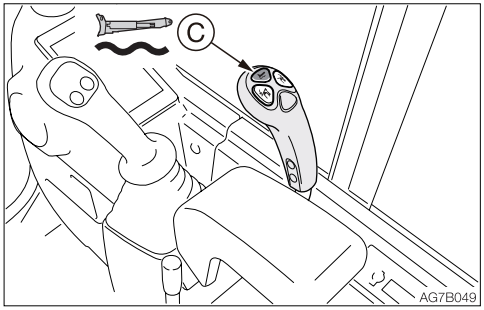

Button (C).....Float mode
Press the float button (C) to set the dozer blade to the float mode.
To cancel the float mode, press the float button (C) again. The float mode is temporally cancelled when the blade lever is tilted backward. To return to the float mode, tilt the blade lever back to the neutral position. Take caution when returning to the float mode.

TRAVEL LEVERS/PEDALS

⚠ WARNING

- **Before operating the travel levers/pedals, make sure that the dozer blade is to the front of the operator's seat. Remember that when the dozer blade is to the rear of the operator's seat, the travel levers/pedals must be operated in the reverse direction from when it is to the front.**
- **Do not rest your foot on the pedal unless operating it for traveling. If the pedal is accidentally stepped while working, the machine may suddenly move and cause serious injury or death.**

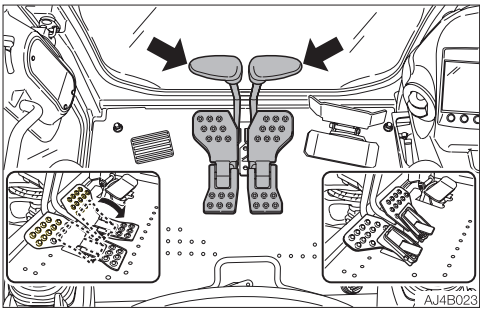

Use these levers/pedals to move forward or backward and to change directions.
Refer to "Operating the travel levers/pedals" on page 3-18.

BOOM SWING PEDAL

⚠ WARNING

Keep the pedal cover to the locked position when not using the pedal. Stepping on a pedal accidentally when it is not locked may cause accidents.

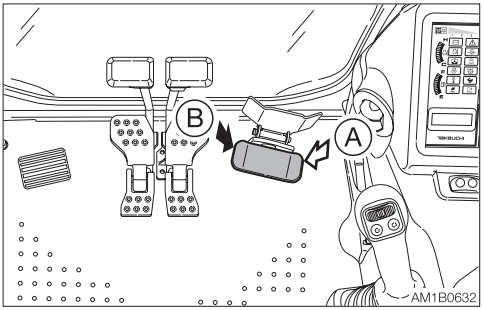

Use this pedal to operate the boom swing.
(A).....Boom swing right
(B) .....Boom swing left
Refer to “Operating the boom swing” on page 3-23.

Pedal lock

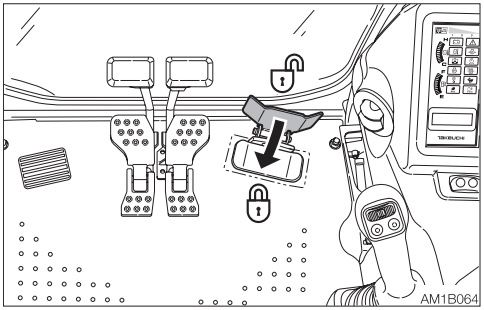

Set the pedal cover over the pedal to lock it.
Open the pedal cover from the pedal to unlock it.

ACCESSORIES

AIR CONDITIONER (IF APPLICABLE)

CAUTIONS ON USE

Ventilate periodically
- When using the air conditioner over an extended period of time, open the windows about once each hour to let in fresh air.
- Your eyes may become irritated if you smoke while using the air conditioner. If this happens, open the windows to let in fresh air. Smoking particularly irritates the eyes when the air conditioner is being used. Since the humidity in the cab drops, the cornea becomes dry.
- If the outside air is dirty, set the air conditioner to the circulation mode.

Always maintain good visibility
Working with dirty windows or fogged windows restricts visibility and is dangerous. Always clean dirt and moisture off the windows before working.
- The windows tend to get foggy when the humidity is high. If this happens, turn on the air conditioner to use outside air and the defroster to get rid of the fog.
- If the air conditioner is set to high when using the defroster, the difference between the external and internal temperatures increases, resulting in frost on the outside of the windows. If this happens, either turn off the air conditioner or move the temperature control knob to the right end to increase the internal temperature.
- Mist may blow out of the air outlets. This is not a malfunction. When moist air passes through the evaporator on the air conditioner unit, water particles in the air freeze and are emitted as mist.

Do not overcool
For health reasons, the air inside the cab should be kept at a temperature at which you feel a little cool when entering the cab from outside (a difference of 5 to 6°C (9 to 12°F)). Remember to adjust the temperature properly.

Do not turn on the air conditioner until the engine is started
To avoid placing an excessive load on the compressor, wait until the engine is started and is running smoothly before turning on the air conditioner.

Let hot air out first
If the machine has been parked in the sun, open the windows and door to let the hot air out of the cab before using the air conditioner.

Caution on refrigerant (gas)
If the refrigerant comes in contact with skin or eyes, it may cause frostbite or eye damage. Never touch the refrigerant or loosen the parts on the cooling circuit.
If the refrigerant gas leaks, keep flames away.

Off-season inspection
Even off season, run the air conditioner for 3 to 5 minutes at least once a week to maintain oil in the various parts of the compressor.
IMPORTANT: Before turning on the air conditioner, make sure that the engine is at low idle if the machine has not been operated for one week or more to protect the compressor.
Never turn it on while running at high speed.
IMPORTANT: If the machine is in storage for a long time, periodically perform a test run whenever possible.
Test run interval: About once a month
Test run duration: At least 10 minutes

COMPONENT NAMES

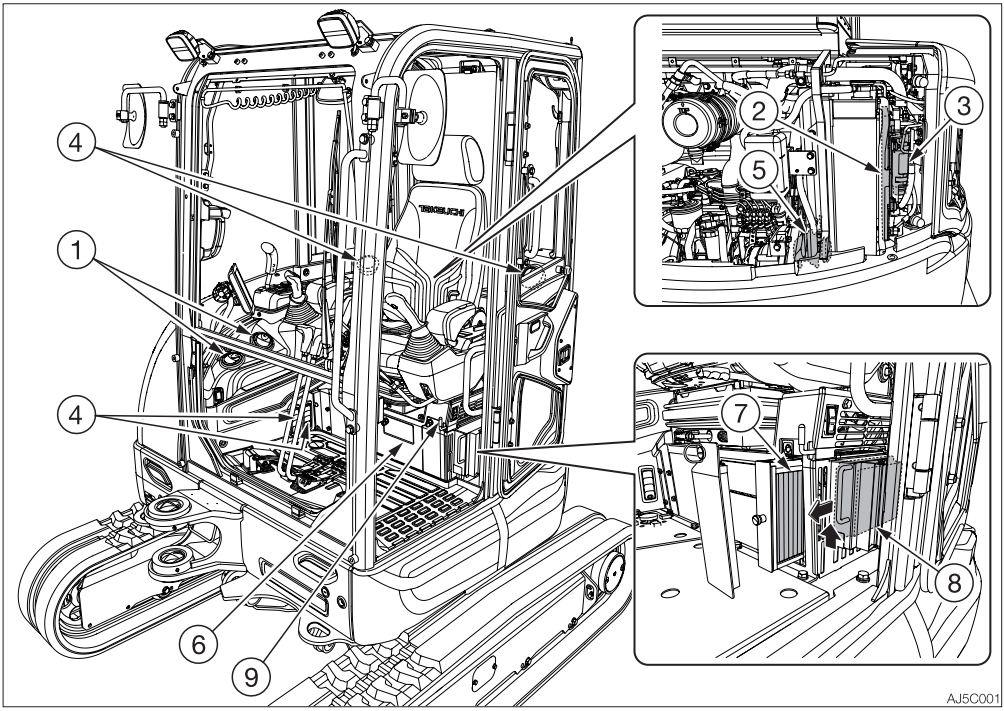

1. Defroster
2. Condenser
3. Receiver dryer
4. Outlets
5. Compressor
6. Air conditioner unit
7. Circulation filter
8. Ventilation filter
9. Ventilation/Circulation select lever

AIR CONDITIONER SCREEN OPERATION

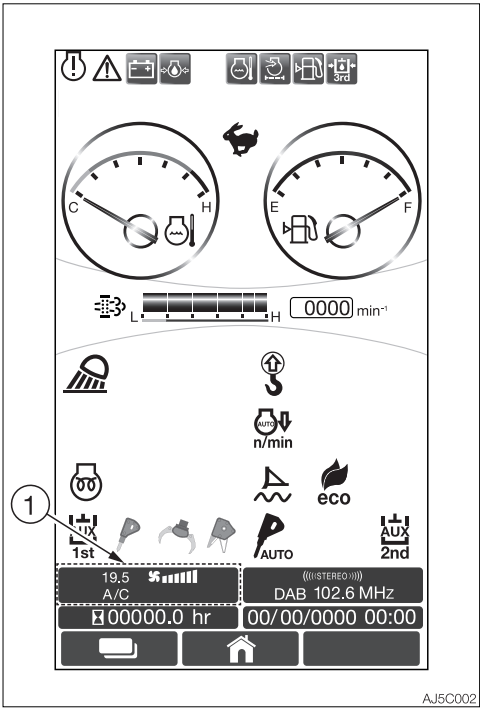

The air conditioner is operated via the display.
When in the Home screen, tap the symbol (1) or press the air conditioner menu switch to go to the air conditioner screen.

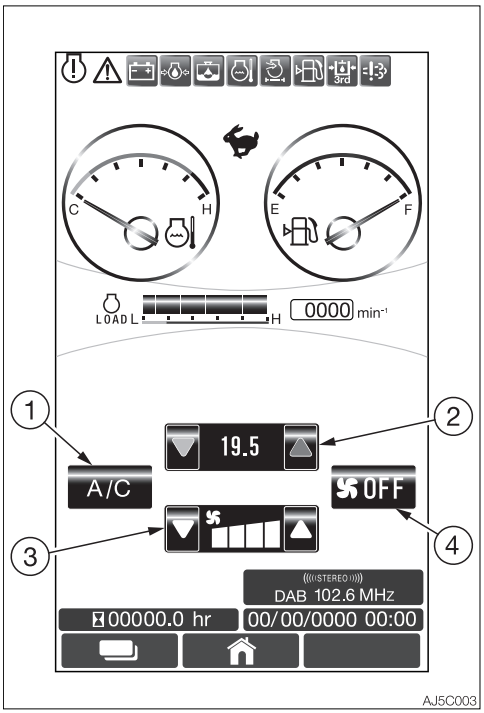

(1) Air conditioner symbol (A/C)

IMPORTANT: To avoid placing an excessive load on the compressor, wait until the engine is started and is running smoothly before turning on the air conditioner.
Use this symbol to turn on or off the cooling/dehumidifying function.

Touch operation
Tapping the air conditioner symbol when the engine is operating turns on the symbol, indicating that the cooling/dehumidifying function has been turned on.
To turn off the cooling/dehumidifying function, tap the air conditioner symbol (1) or the air conditioner OFF symbol (4).

Dial operation
Selecting the air conditioner symbol (1) and pressing the dial when the engine is operating turns on the symbol, indicating that the cooling/dehumidifying function has been turned on.
To turn off the cooling/dehumidifying function, select the air conditioner symbol (1) and press the dial, or select the air conditioner OFF symbol (4) and press the dial.

Symbol is off: ..... OFF
Symbol is on: ..... ON

Note: To prevent leakage of refrigerant gas from the compressor's seal, operate the air conditioner at least once a week, regardless of the season.
Note: The air conditioner will not function if the temperature in the cab is low (3°C (38°F) or lower).

(2) Increase/Decrease setting value
Control the electronic water valve or the clutch on the air conditioner compressor to increase/decrease the temperature of the air that is blown.

Touch operation
Tap the down (▽) or up (△) arrow symbol of the setting value to decrease/increase the value.

Dial operation
Select the setting value and press the dial. Use the up/down/left/right of the dial to change the value, and then press the dial to complete the editing.

(3) Increase/Decrease fan speed
The fan speed can be changed in increments/decrements of 4 steps.

Touch operation
Tap the down (▽) or up (△) arrow symbol of the fan speed setting to change speed.

Dial operation
Select the fan speed setting and press the dial. Use the up/down/left/right of the dial to change the fan speed, and then press the dial to complete the editing.

(4) Air conditioner OFF symbol
Turns off the air conditioner.

Touch operation
Tapping the air conditioner OFF symbol (4) turns off the air conditioner.

Dial operation
Selecting the air conditioner OFF symbol (4) and pressing the dial turns off the air conditioner.

Cautions when using the air conditioner

⚠ CAUTION

- **When the air conditioner is set to the recirculation mode, the air in the cab gradually becomes dirty, so switch to external air ventilate once a comfortable temperature is reached.**
- **Excessive cooling can be harmful to your health. It is best to keep the air inside the cab only about 5 to 6°C (9 to 12°F) cooler than the outside air.**
- **If the excavator has been parked in the sun, open the windows or door to let the hot air out of the cab before using the air conditioner.**

Outlets

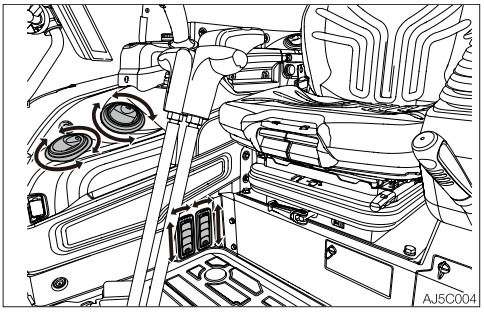

Move the louvers to adjust the air flow direction.

Ventilation/Circulation select lever

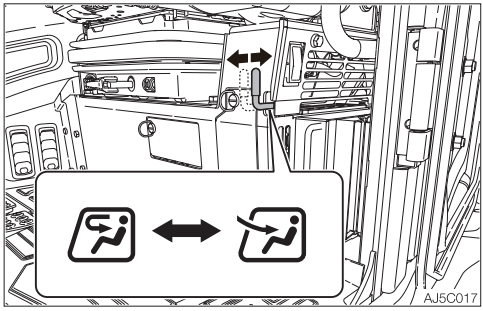

Use this lever to select between Ventilation and Circulation.

..... Circulation
- Quick cooling or heating of the cab
- When external air is dirty

..... Ventilation
- Lets in fresh air
- Defogs the windows
- Ventilates air-conditioned air

HEATER

⚠ WARNING

- Always be sure to allow sufficient ventilation.
- Do not place combustible or explosive objects near the air outlets.

Heater screen operation

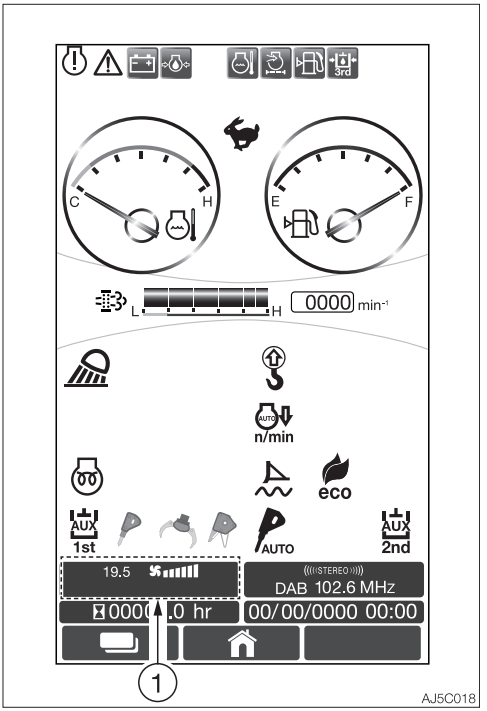

The heater is operated via the display. When in the Home screen, tap the symbol (1) or press the air conditioner menu switch to go to the heater screen.

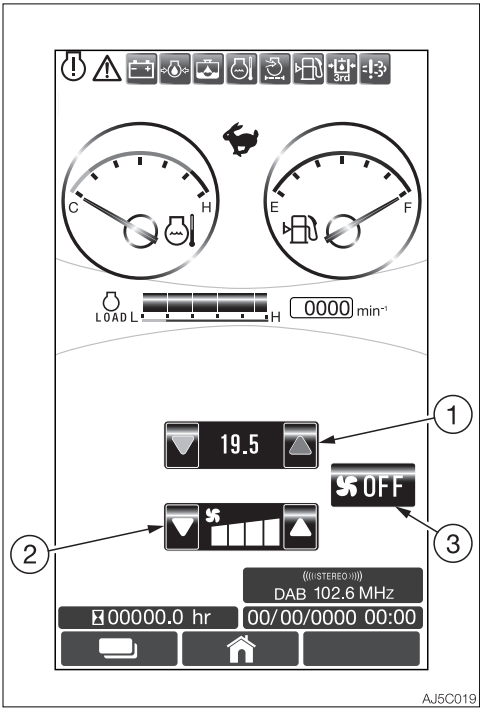

(1) Increase/Decrease setting value
Control the electronic water valve to increase/decrease the temperature of the air that is blown.

Touch operation
Tap the down (▽) or up (▲) arrow symbol of the setting value to decrease/increase the value.

Dial operation
Select the setting value and press the dial. Use the up/down/left/right of the dial to change the value, and then press the dial to complete the editing.

(2) Increase/Decrease fan speed
The fan speed can be changed in increments/decrements of 4 steps.

Touch operation
Tap the down (▽) or up (△) arrow symbol of the fan speed setting to change speed.

Dial operation
Select the fan speed setting and press the dial. Use the up/down/left/right of the dial to change the fan speed, and then press the dial to complete the editing.

(3) Heater OFF symbol
Turns off the heater.

Touch operation
Tapping the heater OFF symbol (3) turns off the heater.

Dial operation
Selecting the heater OFF symbol (3) and pressing the dial turns off the heater.

Ventilation/Circulation lever

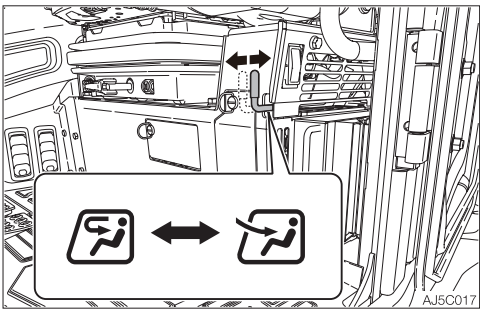

Use this lever to switch between Ventilation and Circulation.

... Full ventilation: For heating with ventilation. Intake of external air. Defrosting the windows.

... Circulation: Quick heating or when external air is dirty.

Outlets

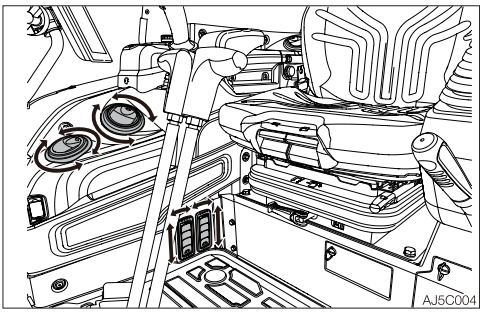

Move the louvers to adjust the air flow direction.

Filters

Clean the filters immediately after operating in dusty places.
If the filters are clogged, the air flow is reduced and a booming sound is heard from the heater unit.
Refer to “Cleaning the air filters (AC)” on page 5-46.

CUP HOLDER/SMALL ITEMS STORAGE

⚠ CAUTION

- **Drinks may be spilled due to vibration when the machine is operating or traveling. Be particularly careful not to burn yourself with hot drinks.**
- **Note that the electric parts may be damaged if drinks are spilled on them. Be careful not to spill liquids on them.**

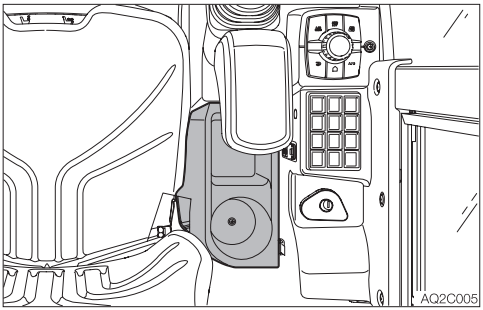

Use this holder to hold cups, bottles or small items.

DOCUMENT STORAGE COMPARTMENT

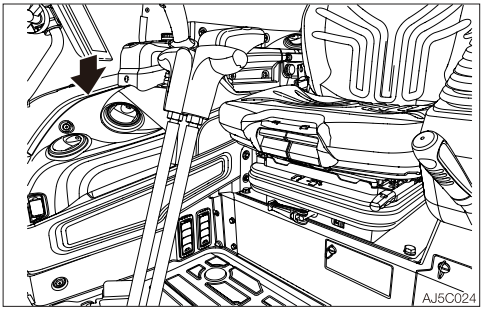

Stores A4 size documents.

INTERIOR LIGHT

IMPORTANT: The battery capacity decreases if the interior light is left on for a long time when the engine is stopped.

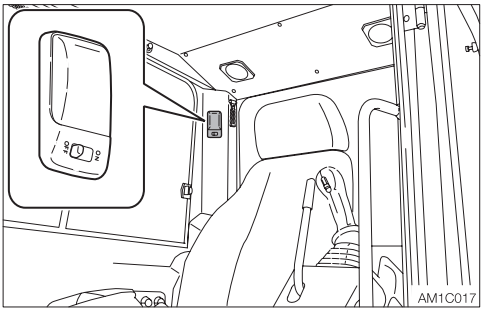

OFF ....Remains off all the time.
ON .....Lights up all the time.

12 V POWER SOCKET

⚠ WARNING

Use only those electric products which comply with the specifications of this socket.

<Canopy>

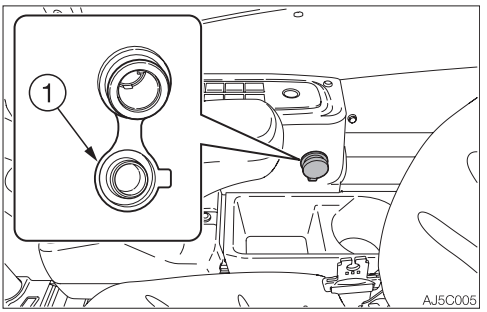

<Cab>

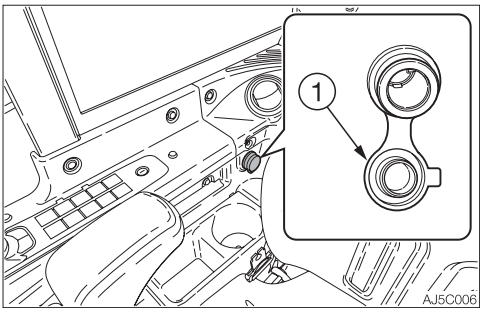

Use this socket to connect the 12 V power supply. When using, be careful not to exceed 12 V/5 A.
To use, open the cap (1).

EXTERNAL POWER SOCKETS (IF APPLICABLE)

⚠ WARNING

Use only those electric products which comply with the specifications of these sockets.

For beacon

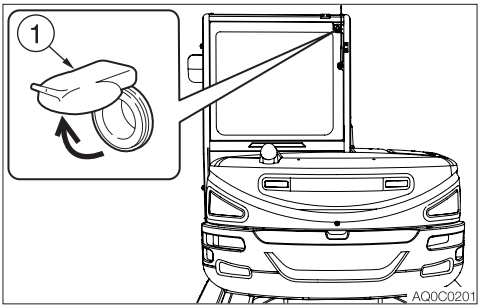

Use these sockets to connect the external power supply. When using, be careful not to exceed 12V/5A.
To use, open the cap (1).

MIRRORS

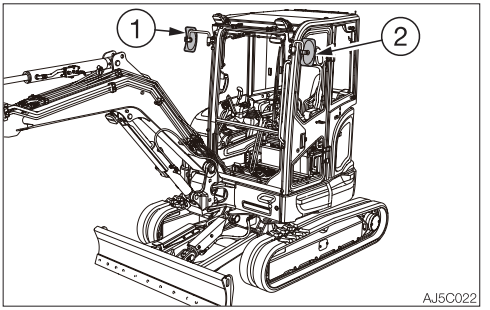

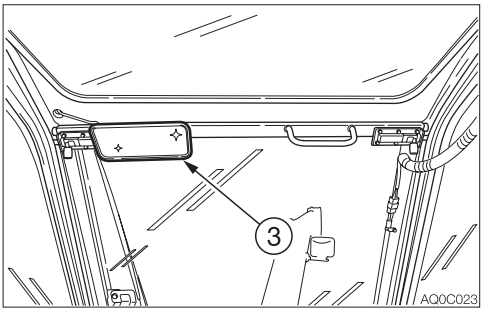

Adjust the rear view mirrors and side view mirrors so that you have a better view.
1. Check the right side rear view
2. Check the left side rear view
3. Check the rear view

RADIO

CAUTIONS ON USE

- To ensure safe operation of the machine, always be sure to keep the volume of the radio down to a level where you can easily hear sounds from outside the machine.
- Do not use the radio for a long time when the engine is stopped. Doing so will drain the battery and make it difficult or impossible to restart the engine.

OPERATIONS ON THE SCREEN

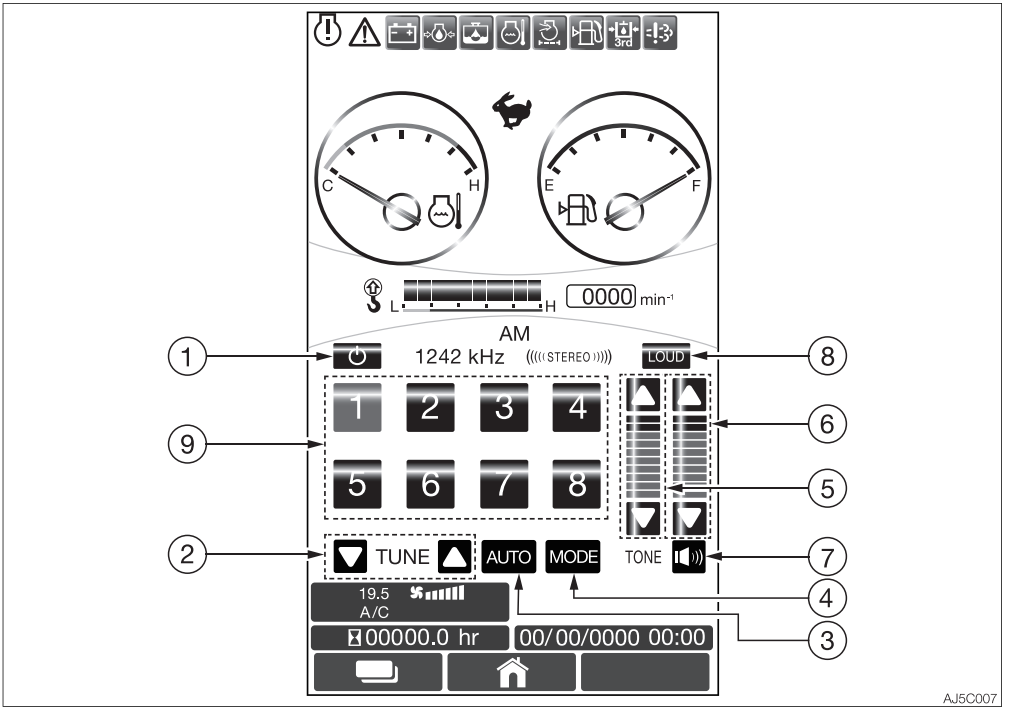

(1) POWER symbol
Touch operation
Tap this symbol to turn on the radio. Tap the symbol again to turn off the radio.

Dial operation
Select this symbol and press the dial to turn on the radio. Press the dial again to turn off the radio.

(2) Tuning symbol (TUNE ▽ △)
Touch operation
Tap and hold the symbol (TUNE ▽ or TUNE △) for two seconds or more to start seeking the receivable stations. When a station is received, seeking stops. To cancel tuning halfway, tap the symbol again.
Tap the symbol (TUNE △) to seek stations with higher frequency, or tap the symbol (TUNE ▽) to seek stations with lower frequency.

Dial operation
Select the symbol (TUNE △ or TUNE ▽) and press and hold the dial for two seconds or more to start seeking the receivable stations.
When a station is received, seeking stops.
To cancel tuning halfway, press the dial again.
Select the symbol (TUNE △) and press the dial to start seeking the stations with higher frequency.
Select the symbol (TUNE ▽) and press the dial to start seeking the stations with lower frequency.

(3) Auto store/Auto seek station symbol (AUTO)
Touch operation
Tapping and holding this symbol for two seconds or more will automatically assign receivable radio station to the preset symbols 1 to 8 (1 to 4 for AM, 5 to 8 for FM).

Dial operation
Selecting this symbol and pressing and holding the dial for two seconds or more will automatically assign receivable radio station to the preset symbols 1 to 8 (1 to 4 for AM, 5 to 8 for FM).

(4) Mode symbol (MODE)
Touch operation
Tapping this symbol will change the band from AM to FM, Bluetooth and DAB in this order.

Dial operation
Selecting this symbol and pressing the dial will change the band from AM to FM, Bluetooth and DAB in this order.

(5) **Tone control symbol**
Touch operation
Tap the up arrow symbol (△) to increase the tone. Tap the down arrow symbol (▽) to decrease the tone. Tapping and holding either symbol will continuously change the tone.

Dial operation
Select the up arrow symbol (△) and press the dial to increase the tone. Select the down arrow symbol (▽) and press the dial to decrease the tone. Pressing and holding the dial will continuously change the tone.

(6) **Volume control symbol**
Touch operation
Tap the up arrow symbol (△) to increase the volume. Tap the down arrow symbol (▽) to decrease the volume. Tapping and holding either symbol will continuously change the volume.

Dial operation
Select the up arrow symbol (△) and press the dial to increase the volume. Select the down arrow symbol (▽) and press the dial to decrease the volume. Pressing and holding the dial will continuously change the volume.

(7) **Mute symbol**
Touch operation
Tap the symbol to set to mute. Tapping the symbol again will cancel mute.

Dial operation
Select the symbol and press the dial to set to mute. Pressing the dial again will cancel mute.

(8) **Loudness symbol**
Touch operation
Tap the symbol to adjust the sound. Tapping the symbol again will cancel the sound adjustment.

Dial operation
Select the symbol and press the dial to adjust the sound. Pressing the dial again will cancel the sound adjustment.

(9) **Preset symbols (1 to 8)**

Touch operation

Tapping and holding the number to be selected for at least two seconds will store the current station into the memory.
To select the desired preset station, tap the number of the desired preset station.

Dial operation

Select the symbol and then press and hold the dial to store the current station into the memory.
To select the desired preset station, select the number of the desired preset station and press the dial.

Bluetooth

OPERATIONS ON THE SCREEN

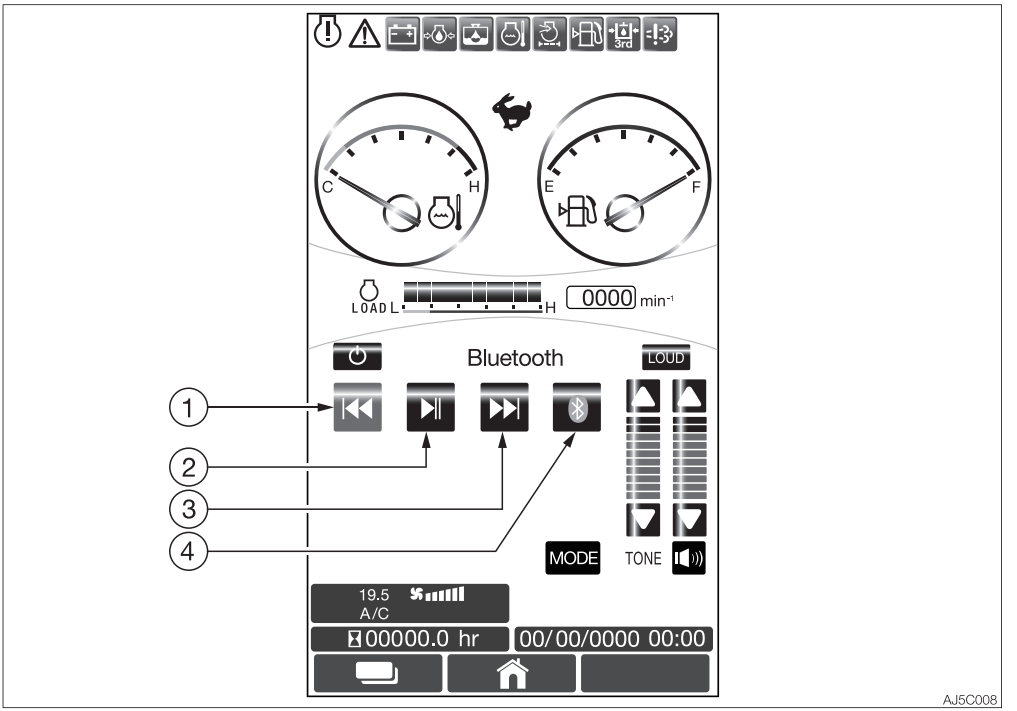

(1) **Backward symbol ( )**
Touch operation
Tap this symbol to move one track backward and start playing back from the beginning of it.

Dial operation
Select this symbol and press the dial to move one track backward and start playing back from the beginning of it.

(2) **Playback/Pause symbol ( )**
Touch operation
Tap this symbol during playback to pause playback. Tapping the symbol again will start playback from the point where the playback was paused.

Dial operation
Select this symbol during playback and press the dial to pause playback. Pressing the dial again will start playback from the point where the playback was paused.

(3) **Forward symbol ( )**
Touch operation
Tap this symbol to move one track forward and start playing back from the beginning of it.

Dial operation
Select this symbol and press the dial to move one track forward and start playing back from the beginning of it.

(4) **Bluetooth symbol**
Touch operation
Tap the symbol to start pairing.

Dial operation
Select this symbol and press the dial to start pairing.

Digital Audio Broadcasting (DAB)

<PRESET SCREEN>

OPERATIONS ON THE SCREEN

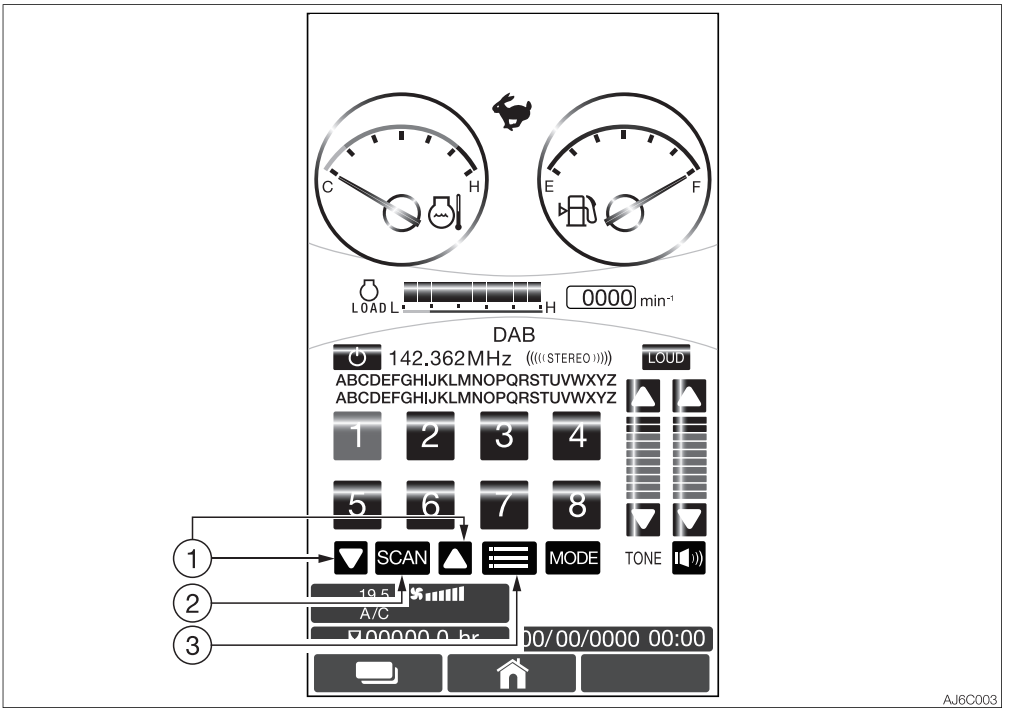

(1) **Down or Up arrow symbol (▽ or △)**
Touch operation
Tap either symbol to switch between the receiving frequencies.

Dial operation
Select either symbol and press the dial to switch between the receiving frequencies.

(2) **Scan symbol (SCAN)**
Touch operation
Tap and hold this symbol for two seconds or more to update the DAB list.

Dial operation
Select this symbol and press and hold the dial for two seconds or more to update the DAB list.

(3) **Program type (PTY) select symbol**
Touch operation
Tap this symbol to switch to the program type display.

Dial operation
Select this symbol and press the dial to switch to the program type display.

<PTY SCREEN>

OPERATIONS ON THE SCREEN

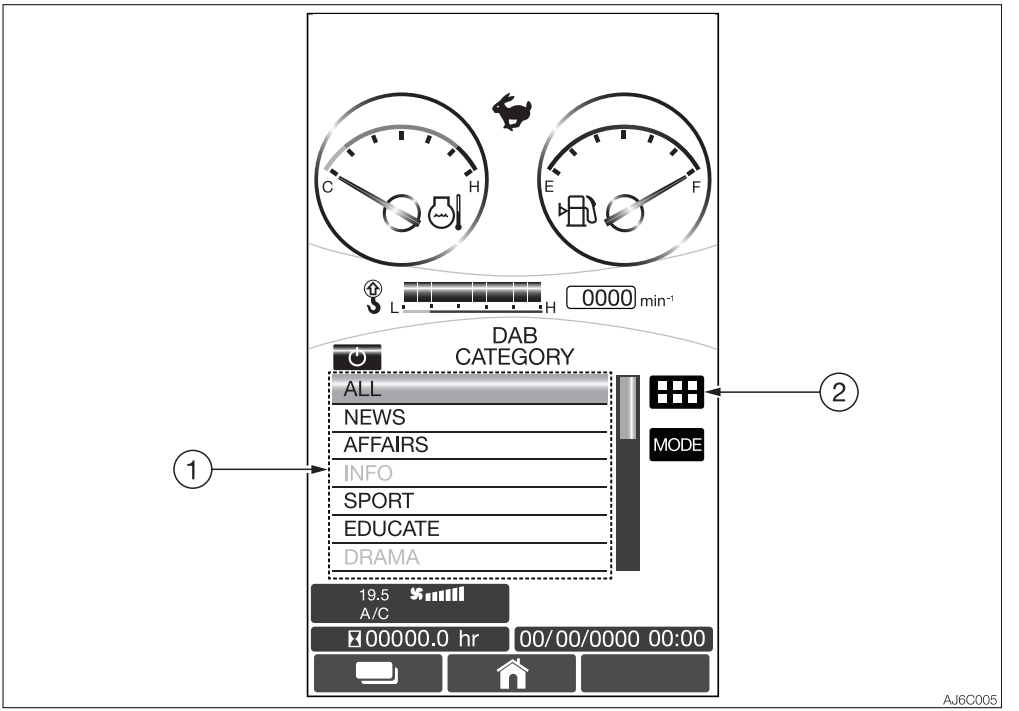

(1) Program type (PTY) symbol (1 to 29)

Touch operation

Tap the desired program type to be set. The screen changes to the program screen of the selected PTY item.
Slide your finger upward while tapping and holding the item to scroll down.
Slide your finger downward while tapping and holding the item to scroll up.

Dial operation

Move the dial up/down or left/right to move the cursor. After moving the cursor to the desired program type to be set, press the ENTER button to confirm. The screen changes to the program screen of the selected PTY item.

Note: If no program is available, the PTY item is displayed in gray.

(2) Preset select symbol

Touch operation

Tap this symbol to switch to the preset display.

Dial operation

Select this symbol and press the dial to switch to the preset display.

<PROGRAM SCREEN>

OPERATIONS ON THE SCREEN

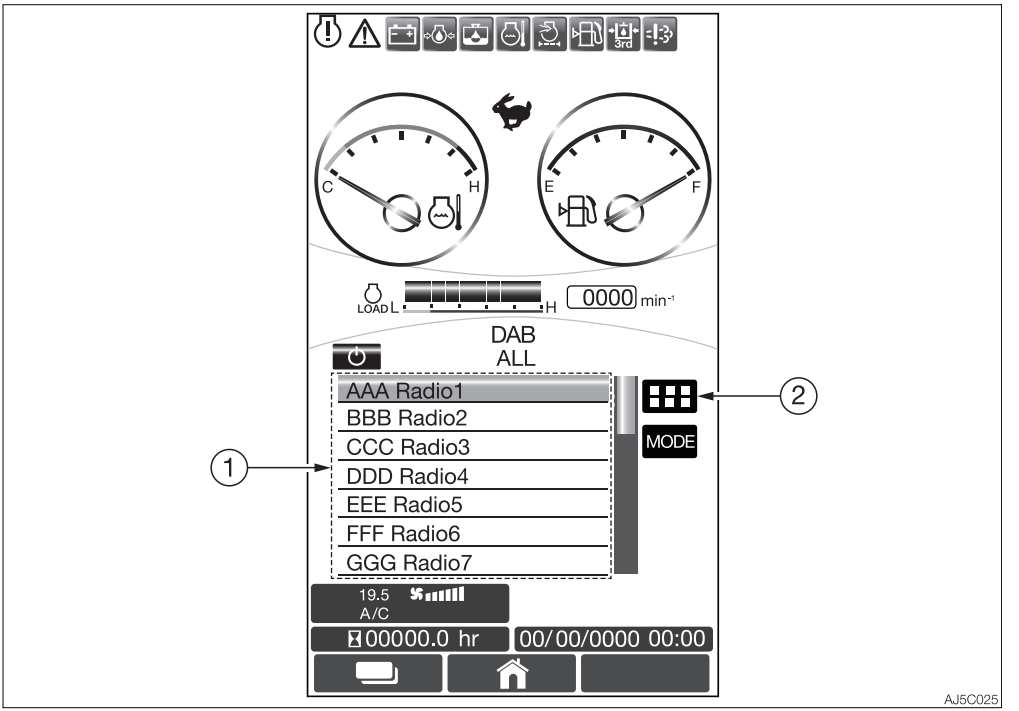

(1) **Program symbol**
Touch operation
Tap the desired program. The screen changes to the preset screen, and the selected program will start playing.
Slide your finger upward while tapping and holding the item to scroll down.
Slide your finger downward while tapping and holding the item to scroll up.

Dial operation
Move the dial up/down or left/right to move the cursor. Move the cursor to the desired program, and press the ENTER button to confirm.
When the setting is confirmed, the screen changes to the preset screen, and the selected program will start playing.

(2) **Preset select symbol**
Touch operation
Tap this symbol to switch to the preset display.

Dial operation
Select this symbol and press the dial to switch to the preset display.

Phone screen

OPERATIONS ON THE SCREEN

To use this feature, your mobile phone must be paired to the machine.
Refer to “Bluetooth” on page 2-112.

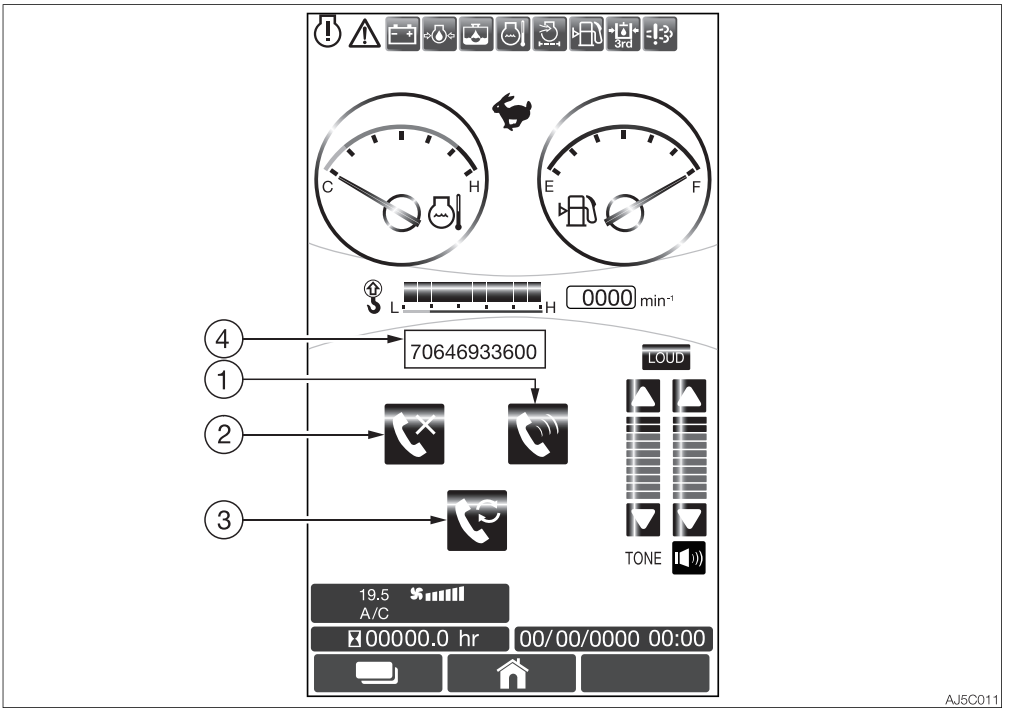

MIC jack

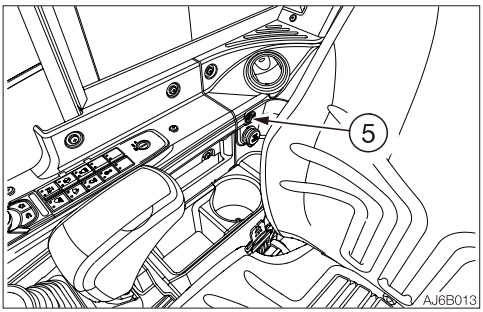

To call, the microphone must be plugged into the MIC jack (5). Plug your microphone into the jack and use your phone.

The phone screen appears when an incoming call is received.

(1) **Answer call symbol**
Touch operation
Tap this symbol to answer a phone call.

Dial operation
Select this symbol and press the dial to answer a phone call.

(2) **End call symbol**
Touch operation
Tap this symbol to end a phone call.

Dial operation
Select this symbol and press the dial to end a phone call.

(3) **Redial symbol**
Touch operation
Tap this symbol to redial.

Dial operation
Select this symbol and press the dial to redial.

(4) **Phone number display**
Displays the phone number of the person you are calling.

AUXILIARY HYDRAULIC LINES (IF APPLICABLE)

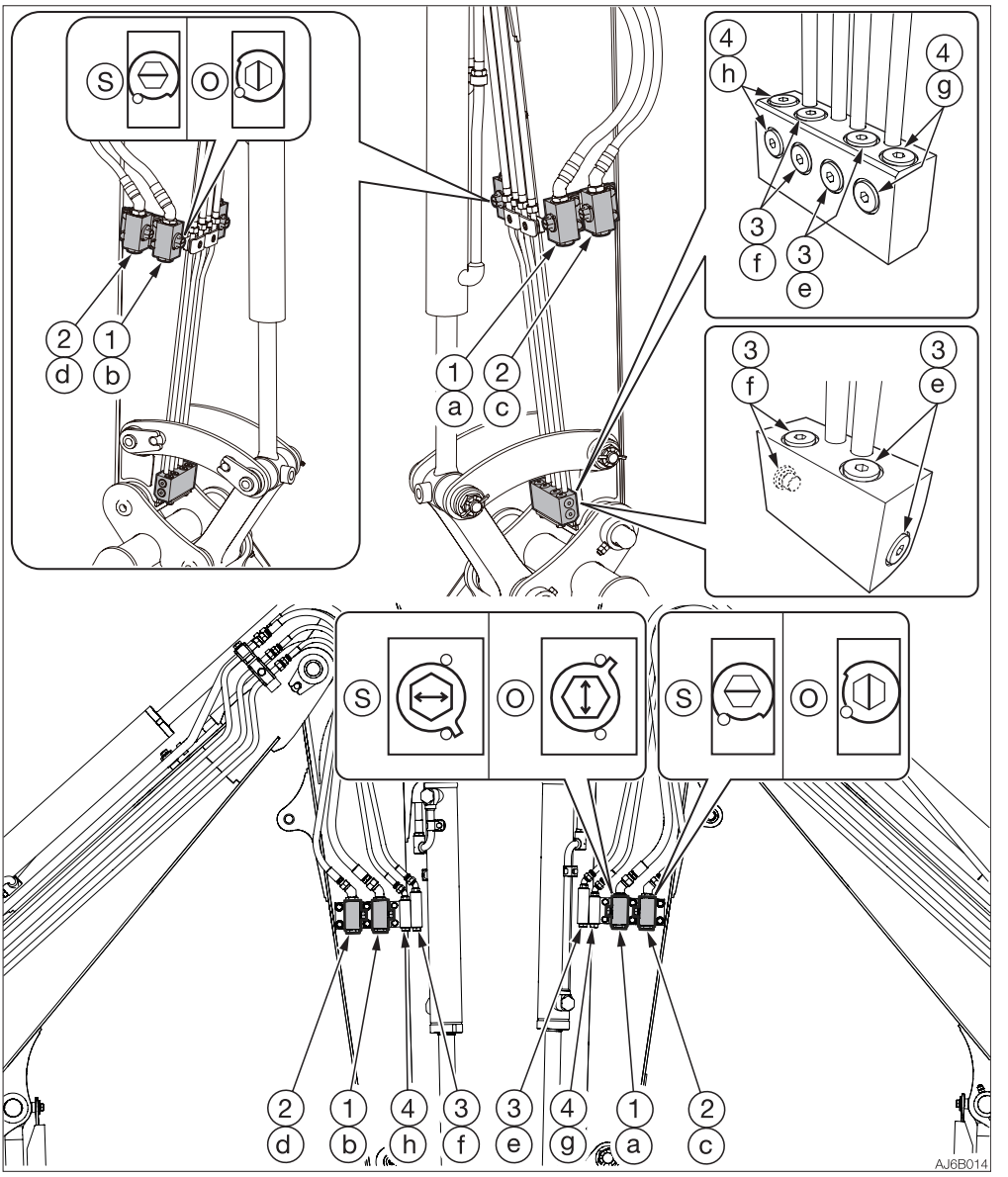

⚠ WARNING

Oil may spurt out if pipes disconnected before releasing the pressure in the hydraulic system.

- **Immediately after the engine is stopped and while the safety lock lever is still in the unlock position, turn the starter switch to ON and press each auxiliary hydraulic switch several times to release the pressure from the auxiliary hydraulic circuit.**
- **Press the air breather button to relieve the tank pressure.**
- **When disconnecting hoses, stand to the side and loosen them slowly to gradually release the internal pressure before removing.**

These lines deliver the hydraulic oil necessary for operating a hydraulic breaker, crusher or other attachments.

(1).....First auxiliary hydraulic lines
(2).....Second auxiliary hydraulic lines
(3).....Third auxiliary hydraulic lines
(4).....Fourth auxiliary hydraulic lines

Stop valve
(S) : Close
(O) : Open

Connecting the hydraulic circuits

To connect the attachment hydraulic lines, observe the following procedures:

1. Release the pressure remaining in the lines, and then close the stop valve.
   Refer to “Releasing the residual pressure” on page 2-125.
2. Remove the plugs.
3. Connect the attachment hydraulic lines to ports (a/c) and (b/d). When installing a hydraulic breaker, connect the supply circuit to the port (a) and the return circuit to port (b).
4. Open the stop valves. When installing a hydraulic breaker, open the selector valve (1).
   Refer to “Selector valve” on page 2-126.
5. When connecting is complete, purge air from the hydraulic lines.
   a. Start the engine and run it at a low idle speed with no load for 10 minutes.
   b. With the engine running in low idle, operate the auxiliary hydraulic switches repeatedly (approx. 10 times) to purge air from the hydraulic lines.
   c. Stop the engine and wait for at least 5 minutes until bubbles escape from the hydraulic oil in the tank.

IMPORTANT: Follow the procedures for purging air as instructed by the attachment manufacturer, if applicable.

6. Check for oil leaks.

Disconnecting the hydraulic circuits

1. Release the pressure remaining in the lines, and then close the stop valve.
   Refer to “Releasing the residual pressure” on page 2-125.
2. Disconnect the lines from the ports (a/c) and (b/d).
3. Install the plugs.

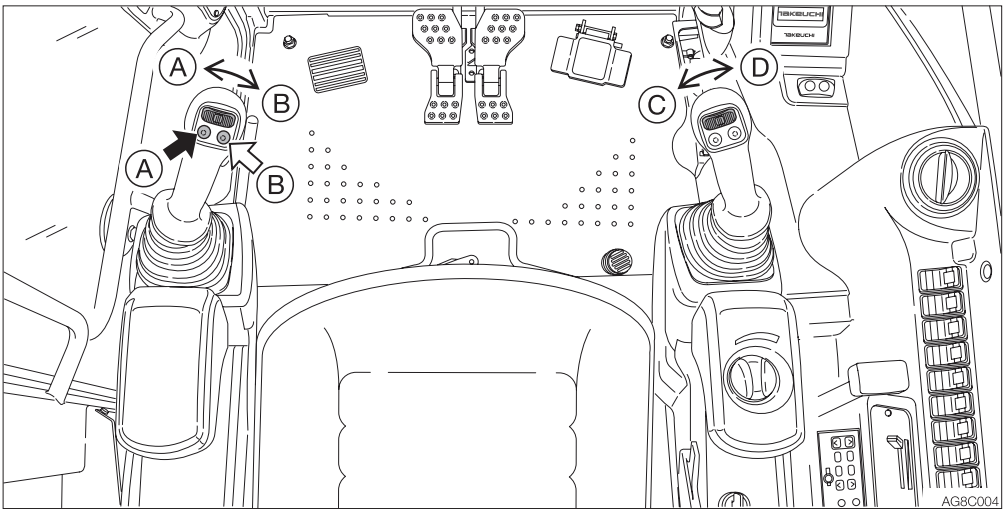

Operating

Press those buttons to control the flow of the oil in the first/second auxiliary hydraulic lines.

(A).....Hydraulic oil flows to left auxiliary line (a).

(B) .....Hydraulic oil flows to right auxiliary line (b).

(C) .....Hydraulic oil flows to left auxiliary line (c).

(D) .....Hydraulic oil flows to right auxiliary line (d).

Releasing the residual pressure

After the auxiliary hydraulic circuits have been used, pressure remains in the circuits. This is called the residual pressure. Release this residual pressure before disconnecting the lines.

Perform the residual pressure releasing within 10 minutes after the engine stopping.

1. Park the machine on a flat, rigid and safe ground.
2. Stop the engine.
3. Lower the safety lock lever to the unlocked position.
4. Turn the starter switch to the ON position.
5. Press the auxiliary hydraulic switches several times to release the residual pressure in the auxiliary hydraulic circuitry.

Selector valve

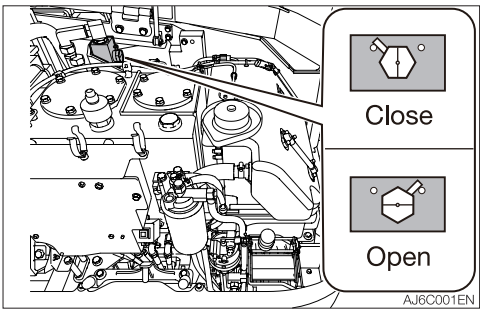

Open ..... When using a hydraulic breaker (1-way flow)
Close..... When using a reversible attachment (2-way flow)

Change the direction of the hydraulic oil flow by opening or closing the selector valve (1) inside the right side cover.

For the machine with the auto tank, select the oil flow using the display.

Refer to “Auxiliary 1st flow rate setting” on page 2-42 or 2-72.

Third auxiliary hydraulic switch and button (If applicable)

IMPORTANT: The specifications of the third auxiliary service differ depending on the machine used (the pipe (e) is high- or low-pressure type). Install the attachment that meets the specifications. For details on the specifications of the third auxiliary service, contact your sales or service dealer.

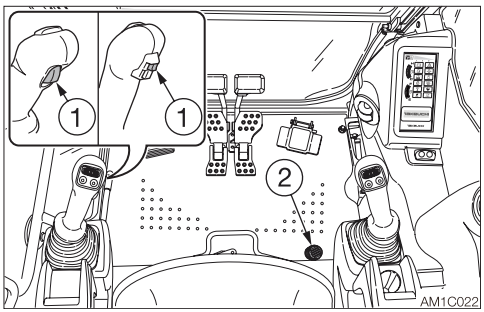

The auxiliary 3rd is mainly used for the attachment that can quickly connect/ disconnect the bucket. After the engine is started, hydraulic oil constantly flows into the pipe (e). This allows the pressure in the (e) side to increase, preventing the pin inserted on the bucket from coming out. If the pressure in the (e) side drops, the warning lamp starts flashing to warn that the bucket may come out. For a safety reason, the bucket can be disconnected only when the button (1) and the switch (2) are pressed at the same time. When they are pressed, the hydraulic oil flows into the line (f) to increase the pressure there. As the result, the pin on the bucket comes out and the bucket is removed from the machine.

- **Bleeder unit for simultaneous use with the auxiliary 1st and 2nd (If applicable)**
  Pressing both the auxiliary 3rd button (1) and the switch (2) makes it possible to release internal pressure from the auxiliary 3rd (e side), auxiliary 1st and auxiliary 2nd at the same time. (The pressure is kept drawn for six seconds after the button and the switch are released.) This enables faster attachment change.

Third auxiliary hydraulic warning lamp

<Canopy>

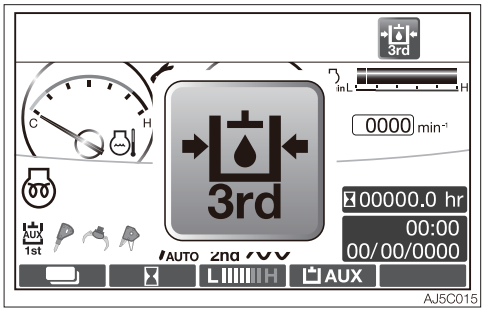

<Cab>

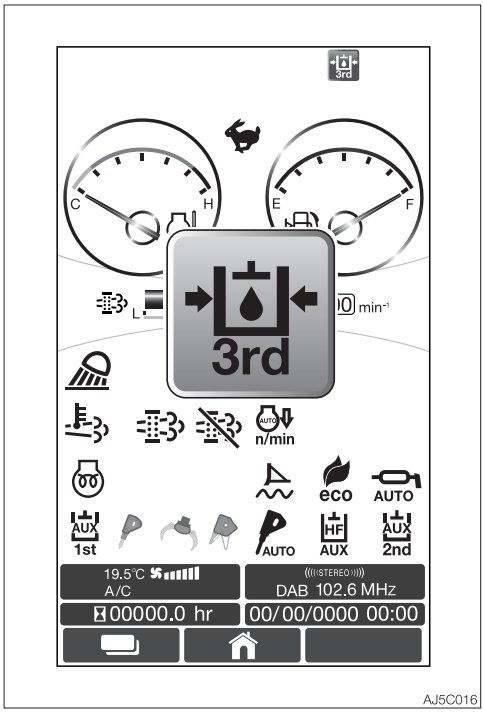

This lamp illuminates and an alarm sounds if the auxiliary 3rd hydraulic pressure drops abnormally while the engine is running.

Auxiliary 2/4 select button (If applicable)

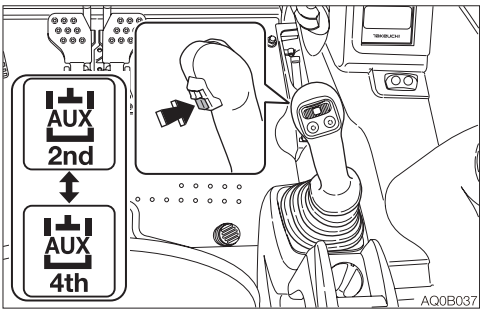

This button is used to change from the second auxiliary operation to the fourth auxiliary operation.
Pressing this button displays the second auxiliary on the LCD to indicate that the second auxiliary operation is enabled.
Pressing this button again displays the auxiliary 4th on the LCD to indicate that the auxiliary 4th operation is enabled.
The actual operation is performed with the auxiliary 2nd/4th switch (slider switch).
Refer to “Auxiliary 2nd/4th switch (If applicable)” on page 2-84.

Setting the flow rate

The flow rate in the auxiliary 1st, 2nd and 4th can be set to the desired values.
For details, refer to “Auxiliary 1st flow rate setting” on page 2-42, “Auxiliary 2nd/4th flow rate setting” on page 2-44, “Auxiliary 1st flow rate setting” on page 2-72 and “Auxiliary 2nd/4th flow rate setting” on page 2-74.

IMPORTANT: The set values are not the guaranteed values. They should be used as rough guides.

OPERATING THE MACHINE WITH AN ACCUMULATOR

⚠ WARNING

Be sure to handle the high-pressure nitrogen gas enclosed in the accumulator with care. If handled incorrectly, it could explode and cause serious injury. Strictly observe the following precautions:

- **Do not disassemble.**
- **Do not allow flame near or throw it into a fire.**
- **Do not drill, weld or fuse.**
- **Do not subject it to physical shock such as hitting, rolling or dropping.**
- **Before disposing of the unit, the sealed gas must be drained. Contact a Takeuchi service agent for help.**

For a machine with an accumulator, the residual pressure in the auxiliary hydraulic circuit or the working equipment circuit can be released even after the engine is stopped.

Releasing residual pressure

Residual pressure refers to the pressure that remains in the hydraulic circuit after the operation. Release the residual pressure as necessary by using the following steps. Perform the residual pressure releasing within 10 minutes after the engine stopping.

1. Return the dial to the original position, and then run the engine at low idling.
2. Lower the bucket and dozer blade to the ground.
3. Check that the safety lock lever is in the released position.
4. Stop the engine.
5. Turn the starter switch to the ON position.

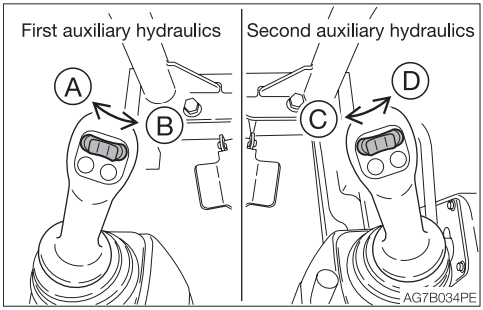

6. Move or press the auxiliary hydraulic switches several times to release the residual pressure in the circuitry.
7. Move all the control levers and pedals several times in all directions to release the pressure from the working equipment circuitry.
8. Raise the safety lock lever to engage the lock.

Lowering the boom when the engine has stopped

Perform this operation within 10 minutes after the engine stopping.

1. Sit at the operator's seat.
2. Turn the starter switch to the ON position.
3. Lower the safety lock lever to the unlock position
4. Slowly push the operating lever forward to lower the boom.

LIFTING SAFETY DEVICE (IF APPLICABLE)

The lifting safety devices include an emergency shut-off valve and an overload warning device.

Emergency shut-off valve

⚠ WARNING

- **If the boom or arm stops due to the breakage of hose, immediately move away from the load being lifted and go to a safe location.**
- **If the emergency shut-off valve hose breaks, immediately stop operation.**
- **Since the emergency shut-off valve (1) is a safety device, you must not disassemble it and/or replace or adjust its internal part. Takeuchi shall not be held responsible for any injuries, accidents or product malfunction caused by disassembly.**

The emergency shut-off valve (1) prevents the boom or arm from falling rapidly in case the hydraulic hose is broken.

Boom

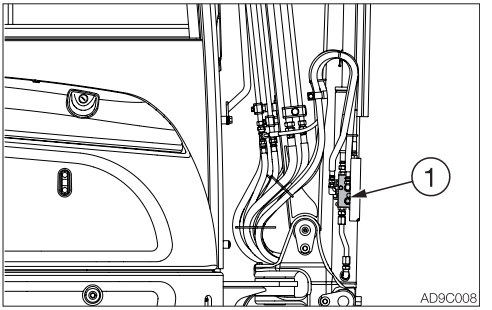

Arm (option)

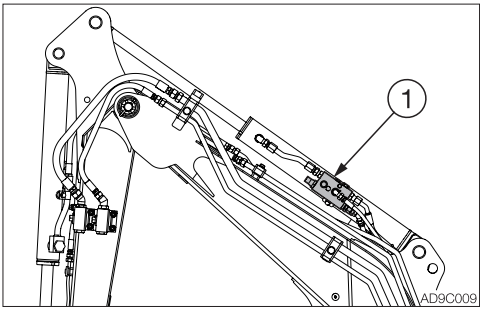

If the hose breaks and the emergency shut-off valve (1) is activated to stop the operation of boom or arm, lower the boom or arm by slowly operating the lever while ensuring safety. Ask your sales or service dealer for repair.

Overload warning device

⚠ WARNING

If the overload is not removed after the overload warning horn is sounded, the machine may tip over or the emergency shut-off valve may be activated. If the horn starts sounding, stop operating the machine and lighten the load.

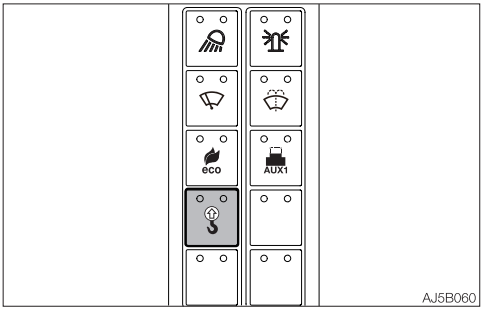

If a weight greater than the lifting capacity is applied or lifted, the overload warning device is activated and the horn sounds. (When the lift overload warning switch is turned on.)

Lift overload warning switch

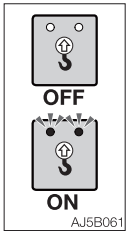

..... Off

..... On

Pressing this switch changes the on or off state of the lamps/lights.
IMPORTANT: The switch can be activated only on the machine equipped with an emergency shut-off valve.

FUEL SUPPLY PUMP (IF APPLICABLE)

⚠ DANGER

Do not use the fuel supply pump for gasoline or hydraulic oil. Doing so could result in explosion or damage.
Only use the fuel supply pump for diesel fuel.

⚠ WARNING

- **Do not keep the right side cover open on a windy day or if the machine is parked on a slope.**
- **When opening and closing the right side cover, be careful not to get your hands or other parts of your body caught by the cover.**
- **When storing, lock the tip of the hose. Failure to do so causes a large fuel spill.**

⚠ CAUTION

Do not fill the tank with additional fuel after the fuel supply pump stops. Doing so could cause the fuel to spurt out.

This device automatically supplies fuel to the fuel tank and stops automatically when the fuel tank is full.

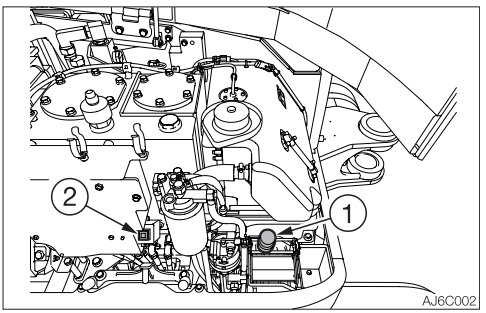

1. Open the side cover.
2. Slowly pull out the hose to the desired length while holding the nozzle (1).

Note: If the hose is pulled out too fast, it could cause failure.
Note: The maximum pulled-out length is 2.5 m. If pulled out longer, the hose cannot be wound back up.

3. The hose is locked each time it is pulled out a certain length. Pull out the hose and lock it near the desired length.
4. Release the lock on the tip of the hose.

Note: Fueling cannot be done unless the lock is released.

5. Insert the nozzle (1) of the pump into the fuel supply tank.
6. Press the switch (2).
   The pump automatically stops once the fuel tank becomes full.

Note: To stop filling at a desired level, press the switch (2).

7. Lock the tip of the hose.
8. Pull out the hose a little to release the lock.
9. Slowly rewind the hose while placing both hands lightly on the hose.

Note: Do not allow the hose to be wound up too fast. Doing so could cause winding failure, injury, accident or machine failure.
Note: When winding the hose, be sure to place your hands on the hose so that it can be properly stored. Failure to do so could cause injury, accident or failure.

10. Wind up the hose until the hose nozzle comes in contact with the stopper.
11. Store the nozzle.

USB PORT (IF APPLICABLE)

⚠ WARNING

- Do not deform, disassemble, modify or short out the port. Doing so could cause heat generation, ignition or electric shock.
- Use only those electric devices that support this USB port. The rated output is 5 V/2.1 A.
- When using the port, be sure to insert the device/plug as far as it will go.

⚠ CAUTION

- The USB port is not waterproof when used as a power source. Keep the cap on when not in use.
- Be sure to connect the device/plug to the port with the correct sides. If forcibly inserted with the incorrect sides, the USB port could be damaged.
- Remove the device/plug from the USB port after use or when not in use. Otherwise it could cause fire or electric shock.

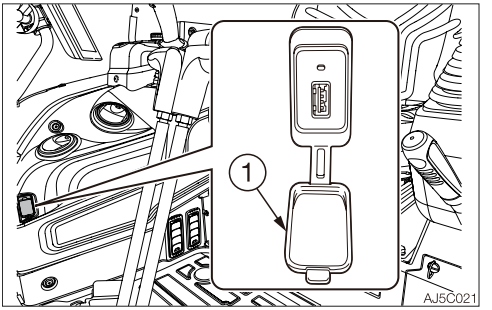

You can draw power from this USB port. To use, open the cap (1).

ENGINE AUTO STOP

⚠ WARNING

Do not leave the machine when the attachment is raised.

The term “Engine auto stop” refers to a function that automatically stops the engine. When the engine auto stop function is on, the machine engine automatically stops to reduce fuel consumption, under the conditions listed below.
When the following conditions are met, the buzzer sounds and the engine stops in three minutes.
1. Safety lock lever is raised
2. Vehicle error code is not generated.
3. Engine error code is not generated.

Refer to “ON/OFF setting” on page 2-48 or 2-76.

IMPORTANT: If the certain conditions are met when the engine auto stop is on, the buzzer sounds once every minute. The buzzer continues to sound once every minute even after the engine stops. Leaving the starter switch at the ON position will deplete the battery. Be sure to turn the switch to the OFF position after the engine is stopped.

Note: The engine auto stop does not function during the DPF auto regeneration.
Note: When the engine is stopped due to the auto stop function, the engine will not start again unless the starter key is turned to the OFF position.
Note: If the safety lock lever is raised to the lock position when the engine auto stop is on, the engine speed will be changed to Low Idle; control of the engine RPM will be disabled. To enable the engine RPM control, lower the safety lock lever to the unlock position.

ARMRESTS

⚠ WARNING

- **Adjust the armrests and firmly secure them.**
- **Do not make any adjustments while operating the machine.**

Adjusting the armrests

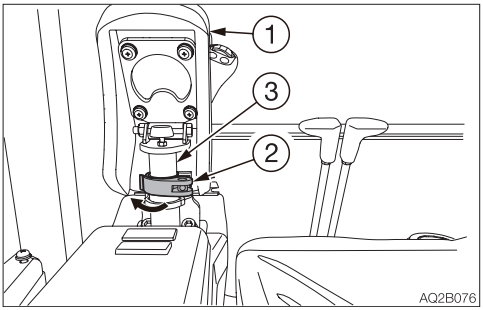

1. Raise the upper part (1) of the armrest.
2. Loosen the clamp (2).
3. Tighten the clamp (2) at the desired position to secure the armrest (3).
4. Lower the upper part (1) of the armrest.

REAR VIEW CAMERA (IF APPLICABLE)

⚠ WARNING

Adjust the cameras before operating the machine.
If the visibility is poor, death or serious injury could result.

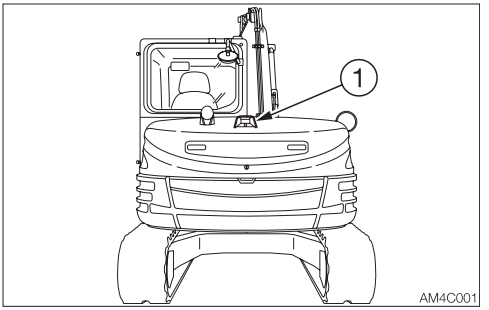

The images being taken by the camera (1) can be shown on the multi information display. While operating the machine, use the camera (1) to check the blind spots from the operator's seat.
If the images are not correctly displayed, adjust the camera installation angle.

Adjusting the installation angle

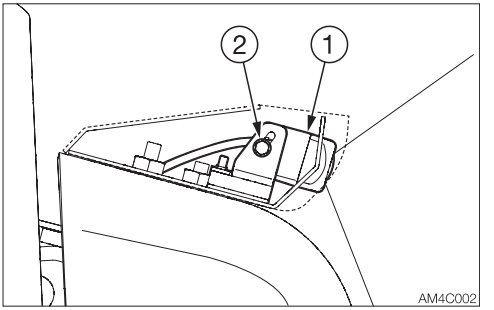

1. Loosen the right and left bolts (2) securing the camera (1).

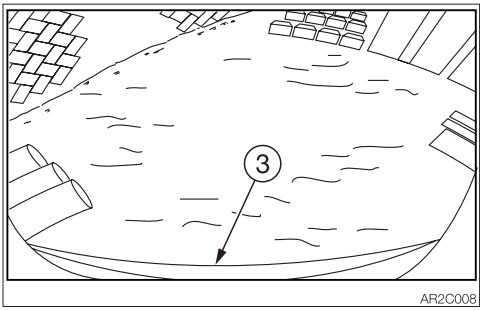

2. Adjust the angle while checking the screen so that the portion (3) of the machine can be displayed.
3. Tighten the right and left bolts (2) evenly.
   · Tightening torque: 0.5 N·m (0.4 ft-lb.)

OPERATION



BEFORE STARTING OPERATION

GETTING ON OR OFF THE MACHINE

⚠ WARNING

- Do not jump on or down from the machine. Never attempt to get on or off the moving machine.
- When getting on or off the cab, first fully open the door to the locked position and check that it does not move.

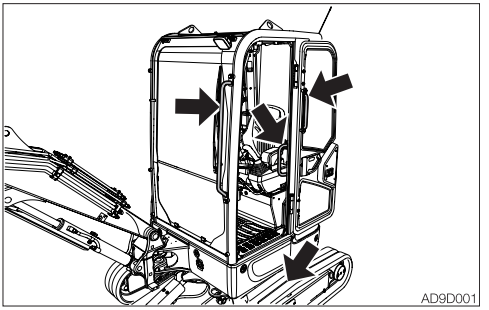

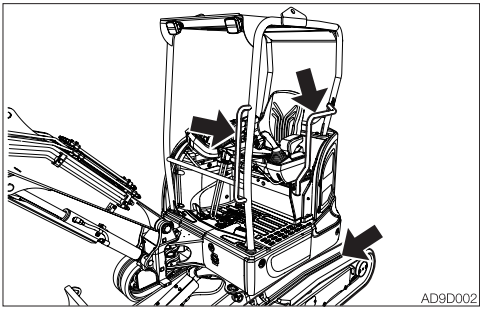

- Climb up/down the steps holding the handrail to support your weight in a three point secure stance (hand and feet).
- Never use the safety lock lever or control levers as hand holds.

WALK-AROUND INSPECTION

Perform the walk-around inspections once a day before starting the engine for the first time that day.
Refer to “MAINTENANCE, Walk-around inspection”, on pages 5-20 and 5-21.

DAILY INSPECTION

Perform the daily inspections once a day before starting the engine for the first time.
Refer to “MAINTENANCE, Daily inspection”, on pages 5-22 to 5-27.

STARTING AND STOPPING THE ENGINE

BEFORE STARTING THE ENGINE

1. Adjust the seat for a comfortable operating position.
2. Fasten the seat belt.

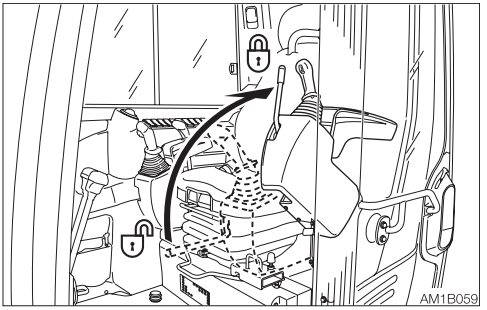

3. Check that the safety lock lever is in the locked position.

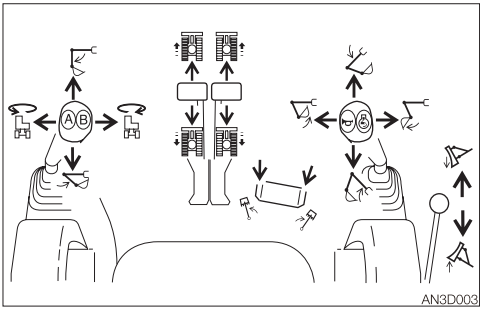

4. Check that all levers and pedals are in the neutral position.

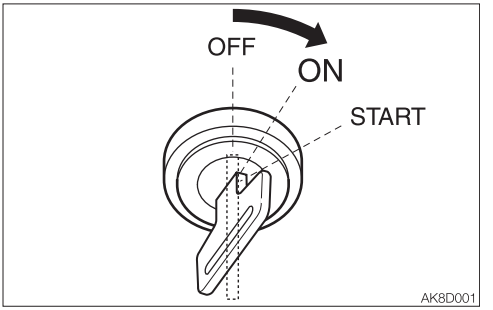

5. Insert the key into the starter switch, turn it to the ON position, then perform the following inspections:

<Canopy>

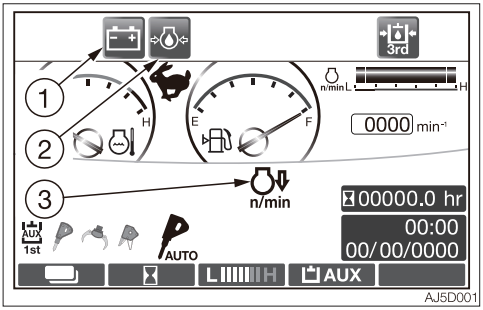

<Cab>

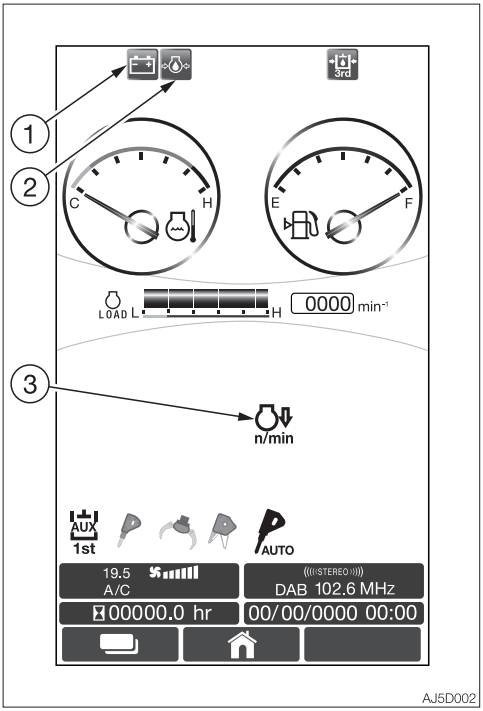

- The “TAKEUCHI” logo appears, followed by the Home screen. Check to see if only the battery charge warning lamp (1) and the engine oil pressure warning lamp (2) are flashing. (If the auxiliary 3rd is selected, it is also flashing.)
- Turn on the light switch to check that the boom light, front light and rear light turn on.
- Check the fuel level.

If a lamp does not light or the alarm is not sounded, the display or a wire may be damaged. Ask your sales or service dealer for repair.

STARTING THE ENGINE

⚠ WARNING

- Clear all personnel from the work area.
- Sound the horn to warn people around the machine.

IMPORTANT: Do not run the starter motor for more than 15 consecutive seconds. If the engine fails to start, wait for 30 seconds, and then try again to start the engine.
IMPORTANT: If the engine stalls due to fuel shortage, add fuel, turn the key to the ON position for 60 seconds, and then turn it to the START position. Running the starter for a long time before there is enough fuel is going through can cause the starter to fail.

Normal starting

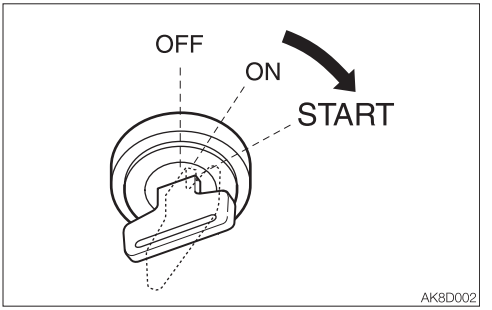

1. Turn the starter key to the START position and start the engine.
   The engine does not start unless the safety lock lever is in the locked position at this point.
   Refer to “Safety lock lever” on page 2-92.
2. Once the engine starts, release the key.
   The key automatically returns to the ON position.
3. Check that the warning lamps are off.
   For safety reasons, it is designed that the deceleration function is activated to set the engine revolutions to low idling whenever the engine is started.
   Cancel the deceleration mode by pressing the deceleration button as necessary.
4. Warm up the engine.
   Refer to “Warming up the engine” on page 3-8.
5. After the completion of the warming up, press the deceleration button to cancel the deceleration mode.

Starting in cold climates

⚠ WARNING

Never use starting fluid on this engine, as the starting fluid could cause an explosion.

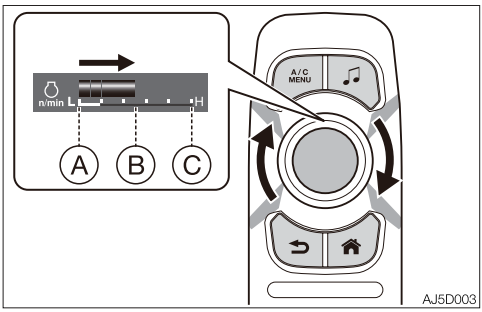

1. Turn the dial to the middle position.

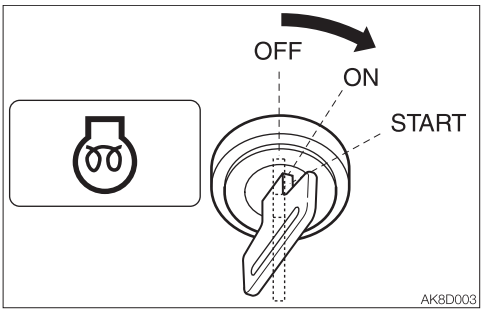

2. Turn the starter key to the ON position, and confirm that the glow lamp is lit. (The glow lamp stays lit while the coolant temperature is kept at 0°C (32°F) or lower.)
3. After the glow lamp goes out, press the deceleration button (to cancel the deceleration mode), and then turn the key to the START position to start the engine. The engine does not start unless the safety lock lever is in the locked position at this point.
   Refer to “Safety lock lever” on page 2-92.
4. Once the engine starts, release the key. The key automatically returns to the ON position.
5. Check that the warning lamps are off.
6. Return the dial to the original position and warm up the engine.
   Refer to “Warming up the engine” on page 3-8.

WARMING UP THE ENGINE

IMPORTANT: Do not accelerate the engine and run it without load until the engine warm up is complete.
Do not warm up the engine for a long time (20 minutes or more). When idling is required, occasionally place a load or run the engine at medium speed.

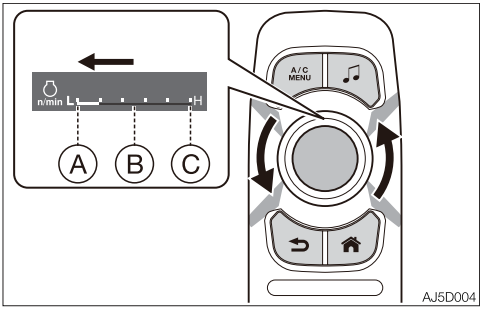

1. Return the dial to the original position, start the engine and then run at a low idle with no load for 5 minutes.

STOPPING THE ENGINE

IMPORTANT: Do not stop the engine suddenly when operating with heavy loads or at the maximum speed. Doing so may cause the engine to overheat or seize. Never stop running the engine suddenly except in emergency.

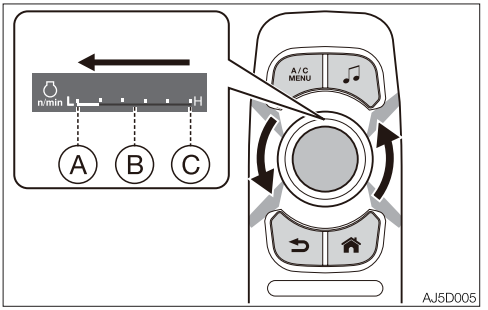

1. Return the dial to the original position.
2. Idle the engine for about 5 minutes to gradually let it cool.

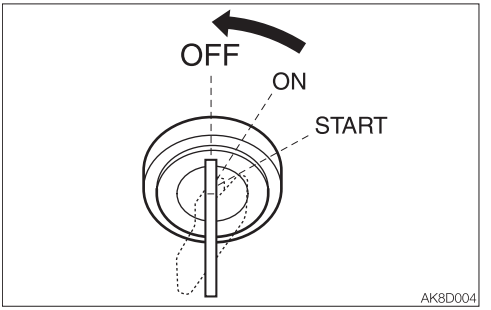

3. Turn the starter key to the OFF position to stop the engine.

OPERATING THE MACHINE

LEVER PATTERN (ISO PATTERN)

⚠ WARNING

- Before starting operation, carefully check which lever pattern you are going to use.
- It is described using the ISO pattern in this manual.

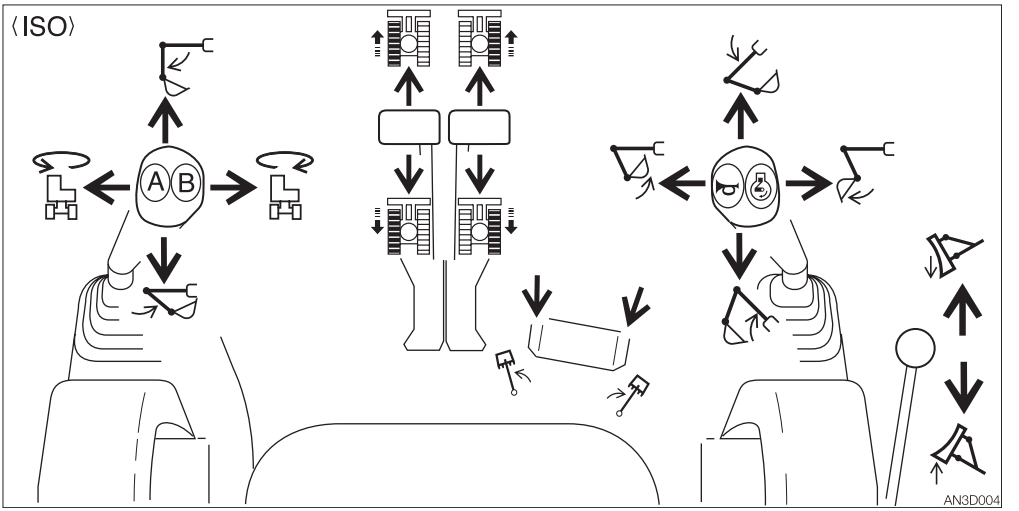

	Left crawler forward		Right crawler forward
	Left crawler reverse		Right crawler reverse
	Arm out		Boom lower
	Arm in		Boom raise
	Upperstructure slew left		Bucket load
	Upperstructure slew right		Bucket dump
	Boom swing left		Dozer blade lower
	Boom swing right		Dozer blade raise

LEVER PATTERN (G PATTERN) (IF APPLICABLE)

⚠ WARNING

- **Before starting operation, carefully check which lever pattern you are going to use.**
- **It is described using the ISO pattern in this manual.**

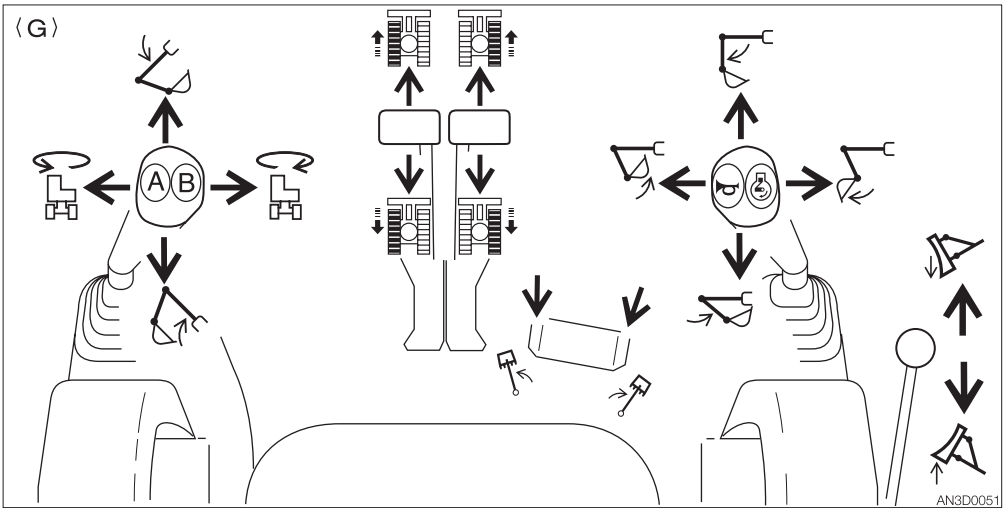

	Left crawler forward		Right crawler forward
	Left crawler reverse		Right crawler reverse
	Boom lower		Arm out
	Boom raise		Arm in
	Upperstructure slew left		Bucket load
	Upperstructure slew right		Bucket dump
	Boom swing left		Dozer blade lower
	Boom swing right		Dozer blade raise

Refer to “Selecting a lever pattern” on page 8-6.

LEVER PATTERN (B PATTERN) (IF APPLICABLE)

⚠ WARNING

- **Before starting operation, carefully check which lever pattern you are going to use.**
- **It is described using the ISO pattern in this manual.**

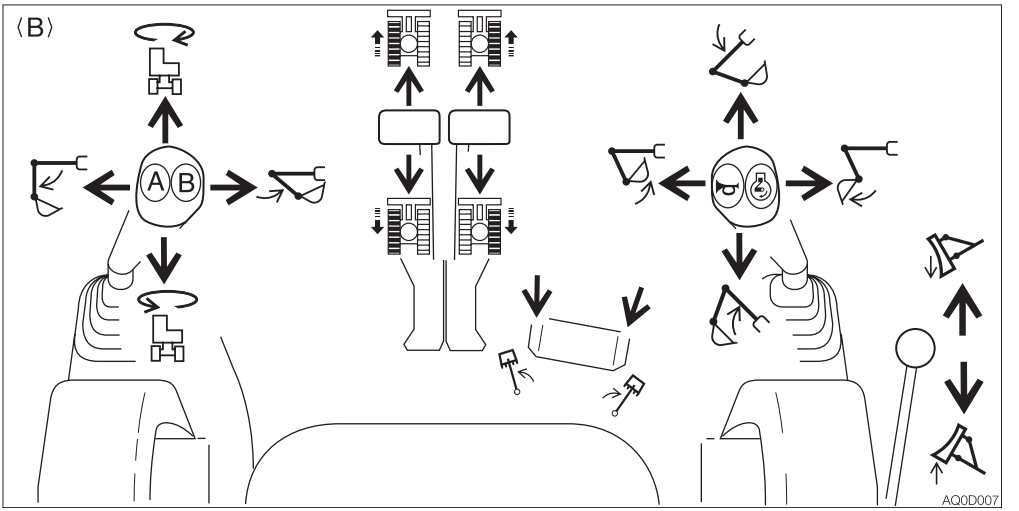

	Left crawler forward		Right crawler forward
	Left crawler reverse		Right crawler reverse
	Upperstructure slew right		Boom lower
	Upperstructure slew left		Boom raise
	Arm out		Bucket load
	Arm in		Bucket dump
	Boom swing left		Dozer blade lower
	Boom swing right		Dozer blade raise

Refer to “Selecting a lever pattern” on page 8-7.

MEMO

WARMING UP THE MACHINE (HYDRAULIC OIL)

⚠ WARNING

Operating the working equipment without warming up the machine (hydraulic oil) is dangerous, as the working equipment cannot response to controls quickly or may move in unexpected ways, and the safety devices may not operate properly. Be sure to sufficiently warm up the machine.

IMPORTANT: Do not operate the levers too quickly when the hydraulic oil temperature is below 20°C (68°F). The proper hydraulic oil temperature during operation is 50 to 80°C (122 to 176°F). If operations must be performed at lower temperatures, heat up the hydraulic oil to at least 20°C (68°F).

Normal warm-up

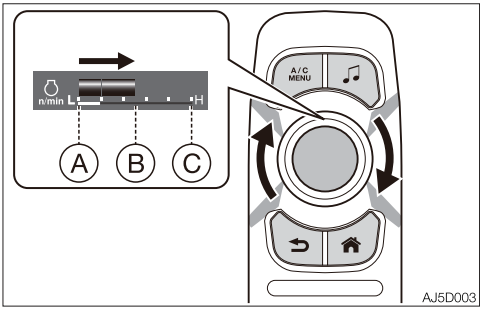

1. Turn the dial to the middle position, and then run the engine at medium speed for about five minutes with no load.

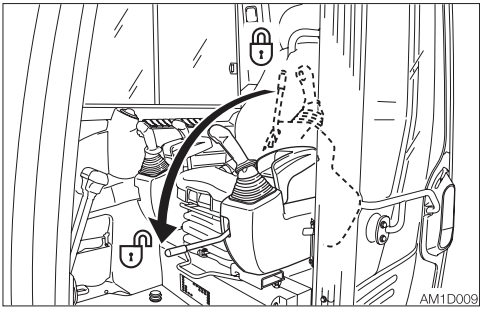

2. Fully lower the safety lock lever to disengage the lock and lift the bucket from the ground.

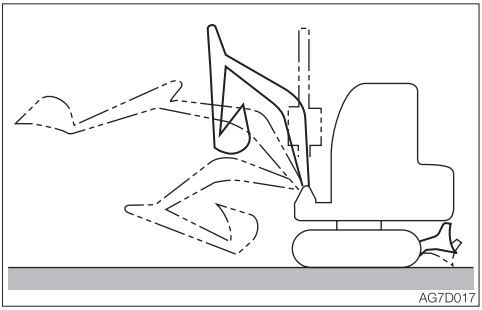

3. Extend and retract each of the cylinders slowly several times with no load.

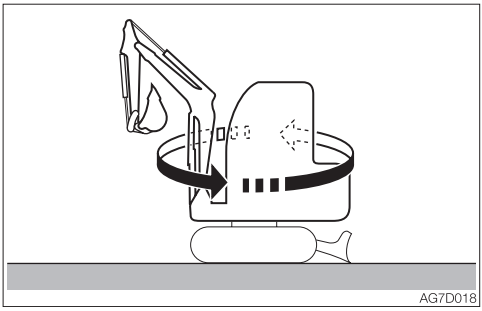

4. Slew slowly to the left and the right several times.

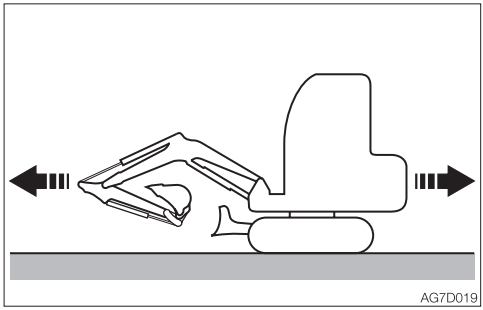

5. Travel slowly forward and in reverse several times.

Warm-up in cold climates

1. Perform the normal warm-up procedure.

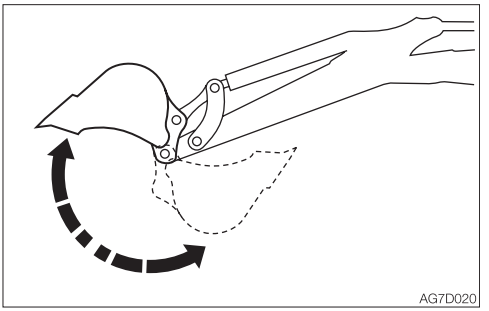

2. Set the bucket cylinder at the stroke end and keep it there.
   Do not keep this condition for more than 30 seconds.
3. Repeat Step 2 until the bucket operating speed becomes normal.

INSPECTION AFTER WARM-UP

After warming up the engine and machine (hydraulic oil), perform the checks and inspections described below, and repair if necessary.

<Canopy>

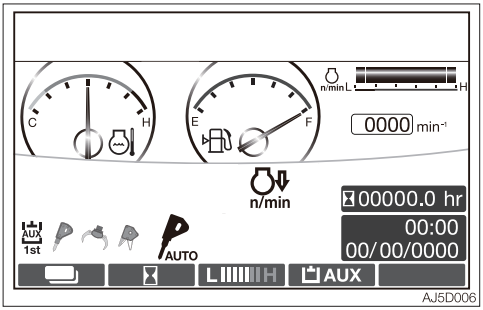

<Cab>

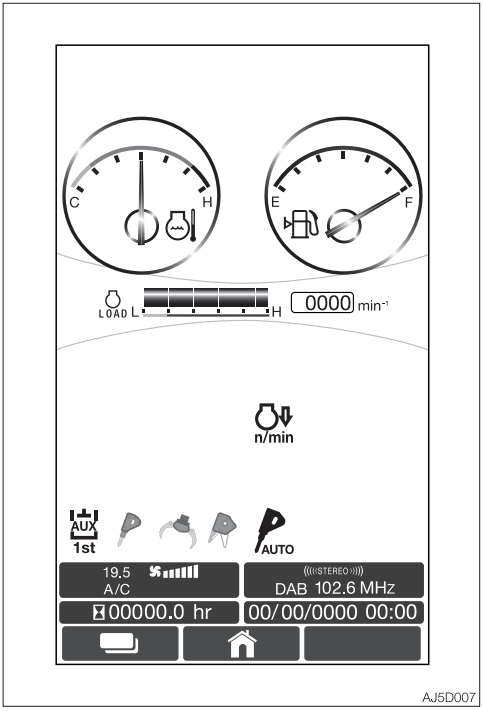

1. Check that the warning lamps and meters are as follows:
   - Are all warning lamps off?
   - Is the water temperature level within the green range?
2. Check that there are no irregularities in the exhaust color, sound and vibrations.

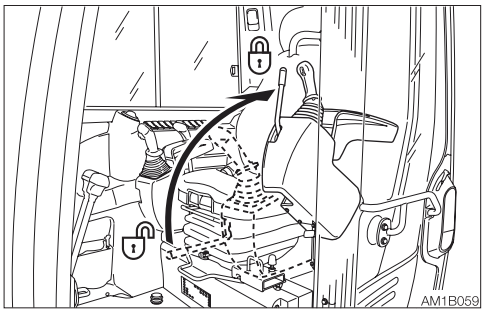

3. Raise the safety lock lever to the locked position, and then check that the operating and travel levers are locked.

OPERATING THE TRAVEL LEVERS/ PEDALS

⚠ WARNING

- Never allow anyone to enter the machine's slewing radius and path.
- Signal your intention to move by sounding the horn.
- There is a blind spot in the rear of the machine. Before traveling in reverse, as necessary, swing the cab around in reverse to check that the area is safe and clear.

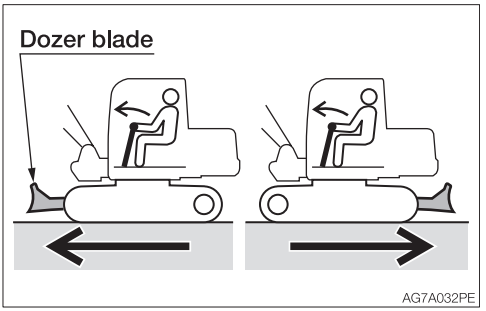

- Before operating the travel levers/ pedals, make sure that the dozer blade is to the front of the operator's seat. Remember that when the dozer blade is to the rear of the operator's seat, the travel levers/pedals must be operated in the reverse direction from when it is to the front.
- Clear all obstacles from the path of the machine.

Moving the machine forward and backward

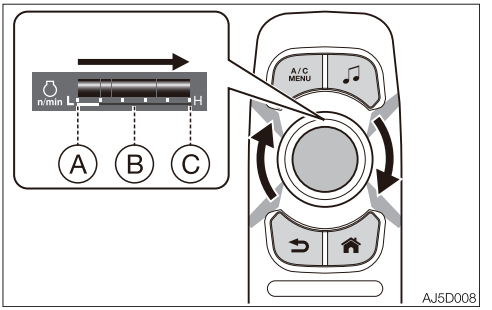

1. Turn the dial and increase the engine speed.

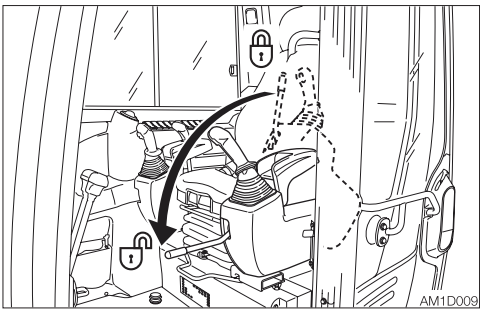

2. Fully lower the safety lock lever to disengage the lock.

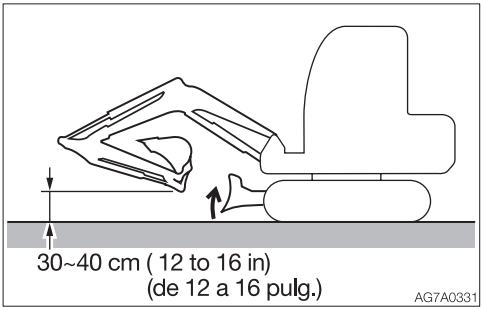

3. Fold the hoe attachment and lower it 30 to 40 cm (12 to 16 in.) above the ground.
4. Lift the dozer blade.
5. Operate the left and right travel levers as below.

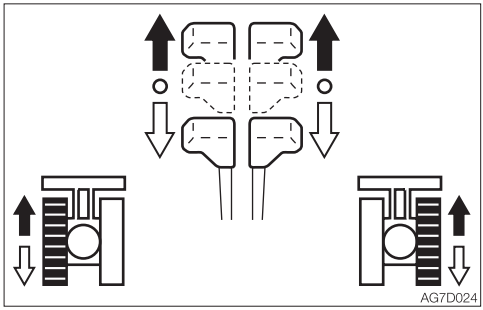

When the dozer blade is in front of the operator's seat:

➡ To move forward:
Tilt the levers forward.

⇨ To move backward:
Tilt the levers backward.

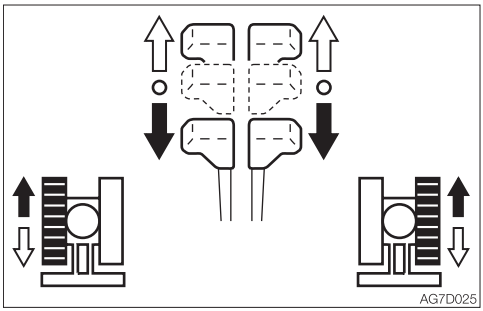

When the dozer blade is behind the operator's seat:

➡ To move forward:
Tilt the levers backward.

⇨ To move backward:
Tilt the levers forward.

Traveling in 2nd (High) speed

⚠ WARNING

When a load greater than a set value is applied during traveling in 2nd (high) speed, the speed will automatically slow down to 1st (low) speed. When the load becomes lighter, the speed will increase and return to 2nd (high) speed. It should be noted that the travel speed changes depending on the load condition (for machines with the automatic travel shift-down system).

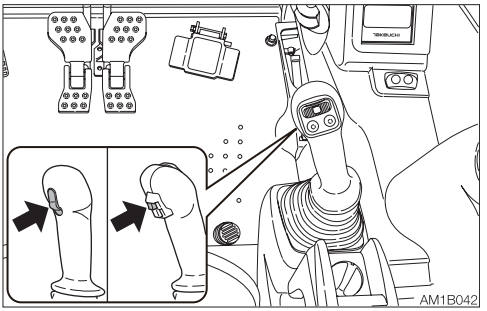

Press the travel speed switch to set to the 2nd (high) speed, and press it again to return to the 1st (low) speed.

Pivot turn

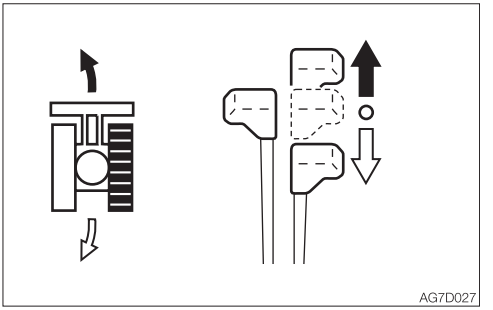

Turning to the left when stopped:

➡ To turn forward to the left:
Tilt the right lever forward.

⇨ To turn backward to the left:
Tilt the right lever backward.

To turn to the right, operate the left lever in the same way as for the right lever.

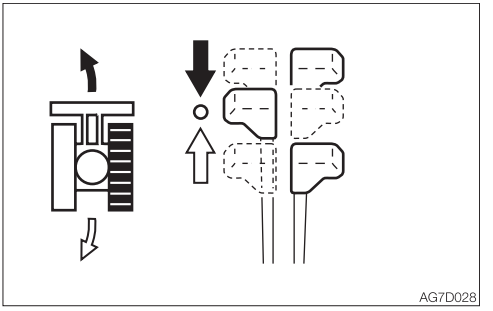

Turning to the left while traveling:

➡ To turn left while traveling forward:
Set the left lever to neutral.

⇨ To turn left while traveling backward:
Set the left lever to neutral.

To turn to the right while traveling, operate the right lever in the same way as for the left lever.

Spin turn

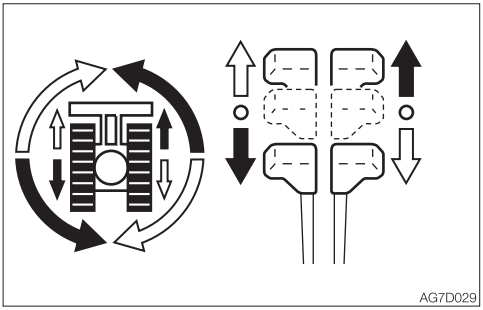

➡ To spin left:
Tilt the left lever backward and the right lever forward.

⇨ To spin right:
Tilt the right lever backward and the left lever forward.

STOPPING TRAVEL

⚠ WARNING

- **Park the machine on a flat, rigid and safe ground. Set the parking brake. If you must park on a slope, chock the tracks to block the machine.**
- **If any control is accidentally touched when the safety lock lever is not locked, the machine may suddenly move and cause serious injury or death.**

⚠ CAUTION

Never stop running the machine suddenly except in emergency. Stop in good time, if possible.

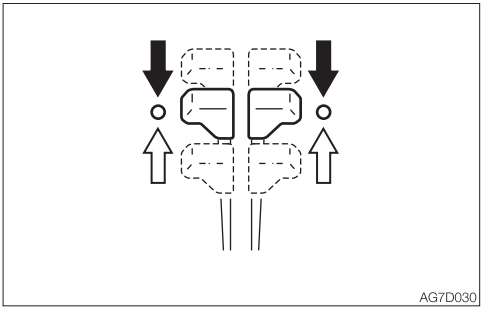

1. Set the left and right travel levers slowly to the neutral position. The machine stops.

OPERATING THE WORKING EQUIPMENT

⚠ WARNING

- **Before starting operation, carefully check which lever pattern you are going to use.**
- **It is described using the ISO pattern in this manual.**

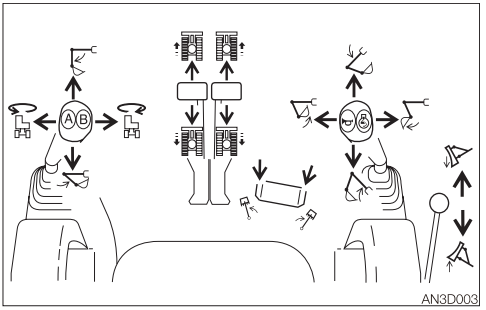

Use the right operating lever to operate the boom and bucket.
Use the left operating lever to operate the arm and slewing.
Return the operating levers to the neutral position to stop the hoe attachments.

1. Lower the safety lock lever to the unlocked position.
2. Set the pedal cover to the unlocked position.

Slewing

⚠ WARNING

Check the surrounding area for safety before slewing.

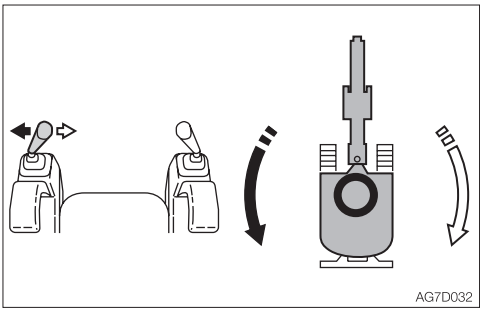

➡ Upperstructure slew left:
Tilt the left operating lever to the left.
⇨ Upperstructure slew right:
Tilt the left operating lever to the right.

Operating the boom

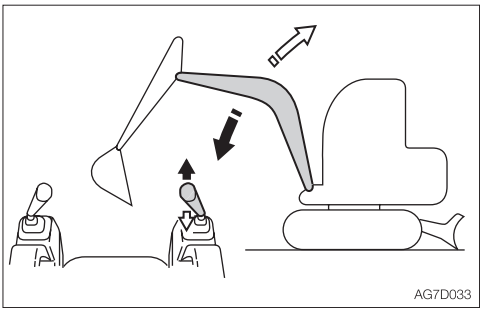

➡ Boom lower:
Tilt the right operating lever forward.
⇨ Boom raise:
Tilt the right operating lever backward.

Operating the arm

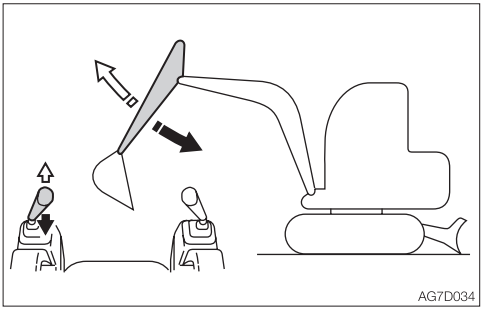

➡ Arm in:
Tilt the left operating lever backward.

⇨ Arm out:
Tilt the left operating lever forward.

Operating the boom swing

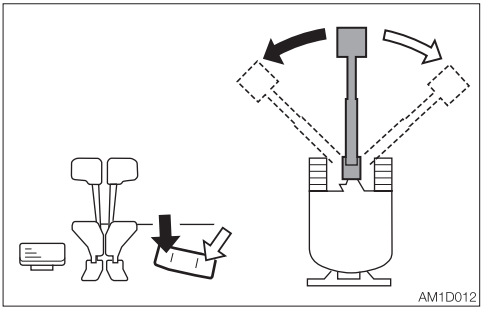

➡ Boom swing left:
Step on the left side of the pedal.

⇨ Boom swing right:
Step on the right side of the pedal.

Operating the bucket

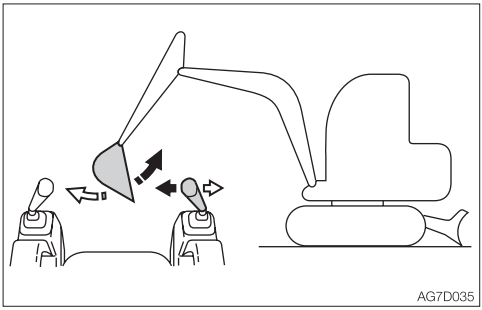

➡ Bucket load:
Tilt the right operating lever to the left.

⇨ Bucket dump:
Tilt the right operating lever to the right.

Operating the dozer blade

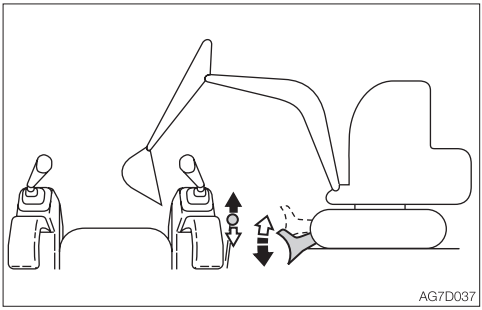

➡ Dozer blade lower:
Tilt the lever forward.

⇨ Dozer blade raise:
Tilt the lever backward.

OPERATING PROCEDURES

PROHIBITED OPERATIONS

⚠ WARNING

- **Do not operate on bedrock (hard or soft).**
- **Do not slew /swing while traveling. If you must operate the hoe attachment while traveling, operate at speeds slow enough so you have complete control at all times.**

Do not perform demolition or leveling using slew force

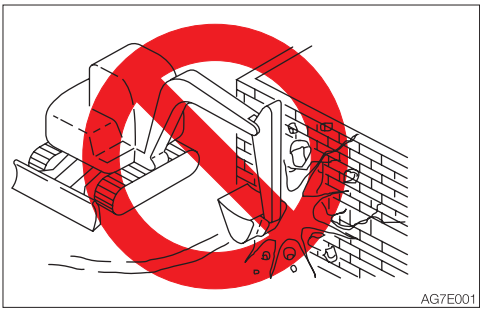

Do not demolish walls or level ground using slew force. Also, do not dig the bucket teeth into the ground during slewing. Doing so will damage the hoe attachment.

Do not dig while traveling

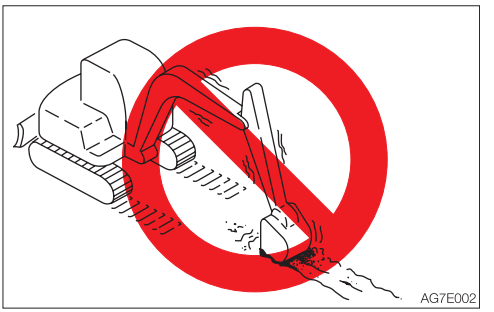

Do not dig the bucket into the ground and use the traveling force to dig.

Be gentle when using the hydraulic cylinder

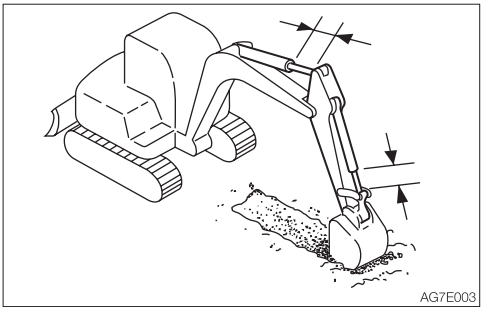

Do not extend the hydraulic cylinders to the stroke ends. Operate them with leeway.

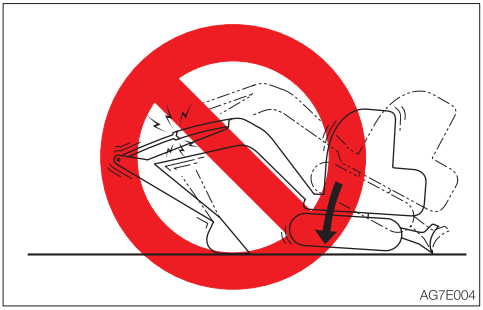

Do not support the machine body with the hoe attachment when the body is lowering with the arm cylinder fully extended. Doing so concentrates the load on the arm cylinder and could damage the arm cylinder.

Do not drive piles with the bucket or dig by banging the bucket

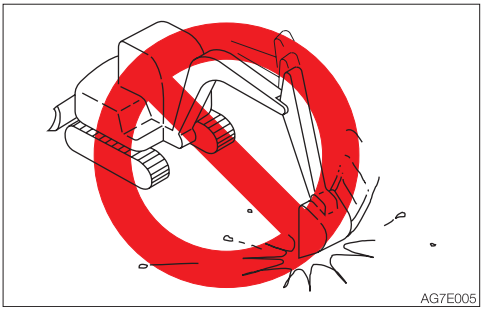

Doing so will shorten the service life of the hoe attachment. Use the hydraulic force to dig.

Do not perform operations using the machine's dropping force

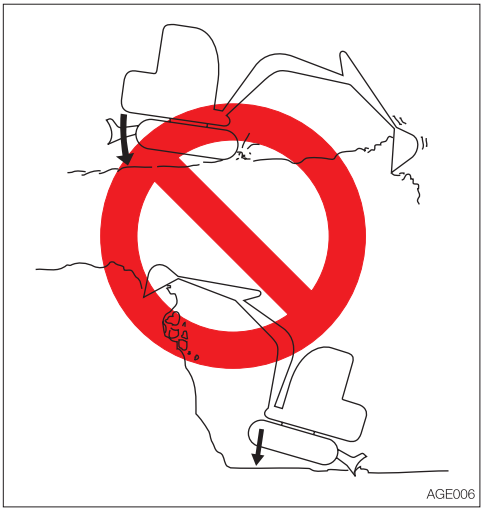

Putting excessive strain on the machine will shorten its service life. When digging, use the hydraulic force of the cylinders and the shallow and long strokes.

Digging bedrock

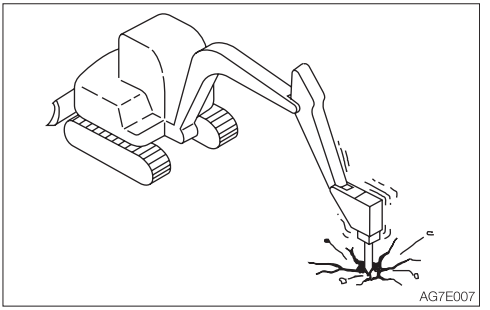

For hard base rock, break the rock up into small pieces with a breaker, etc., before digging. This prevents damage to the machine and is thus more economical in the end.

Caution on exposing the dozer blade to shocks

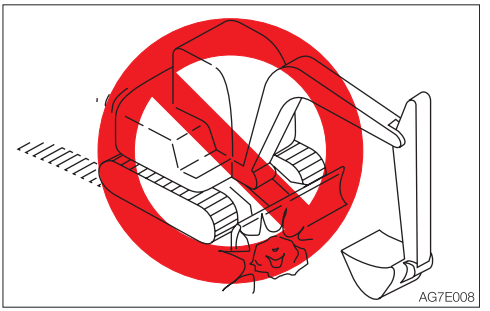

Hitting the dozer blade against rocks, etc., could damage the dozer blade or the blade cylinder.