**43. Auxiliary 1st flow rate indicator lamp**

This lamp lights up to indicate which flow rate setting is selected in the auxiliary 1st.

To switch to the desired flow rate setting, tap the corresponding symbol or use the cursor to select the corresponding symbol and press the dial.

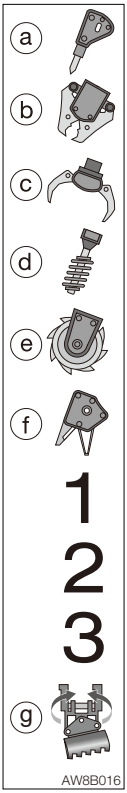


..... a Flow rate setting 1

..... b Flow rate setting 2

..... c Flow rate setting 3

..... d Flow rate setting 4

..... e Flow rate setting 5

..... f Flow rate setting 6

..... 1 Flow rate setting 7

..... 2 Flow rate setting 8

..... 3 Flow rate setting 9

..... g Flow rate setting 10 (If equipped)

Refer to “1. Auxiliary 1st flow rate setting” on page 2-49.

**44. Auxiliary 1st one-way (one-way circuit) indicator lamp**




..... Auxiliary 1st auto tank is selected.

..... Auxiliary 1st one-way is selected.

No display: ..... Two-way (two-way circuit) is selected.

**45. High-flow indicator lamp**

This lamp lights up when the auxiliary 1st flow rate is set to high-flow.

**46. Auxiliary 2nd/4th select indicator lamp**

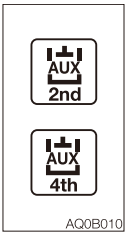


..... Auxiliary 2nd is selected.

..... Auxiliary 4th is selected.

**47. Water temperature gauge**

Indicates the temperature of the engine coolant water. The indicator level must be within the normal range during machine operation. The red range indicates overheating.

**48. Fuel gauge**

Indicates the amount of fuel in the tank. Be sure to fill up the tank before running out of fuel.

**49. Hydraulic oil thermometer**

This instrument indicates the temperature of the hydraulic oil. The level must be within the normal range during machine operation.
The red range indicates overheating.

**50. DEF/AdBlue® level indicator**

This meter Indicates the amount of the DEF/AdBlue® solution remaining.
Be sure to refill the tank in good time before running out of DEF/AdBlue®.

**51. Hour meter/Trip meter**

**• Hour meter**

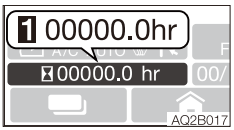


Displays the total engine running time in hours.
The rightmost digit indicates tenths of hours (6 minutes).
Set the inspection and maintenance intervals according to the time displayed on the hour meter.

**• Trip meter**

Three patterns of desired operating hours can be displayed.
Refer to “(1) Trip meter setting” on page 2-40.

**52. Date and time indicator**

Displays the date and time set.
Refer to “(5) Date and Time setting” on page 2-44.

**53. Quick air conditioner display**

Displays the air conditioner settings.
Refer to “Air conditioner” on page 2-91.

**54. Quick radio display**

Displays the radio settings.
Refer to “Radio” on page 2-102.

**55. Actual engine RPM**

Displays the actual engine RPM.

**56. Throttle opening position indicator**

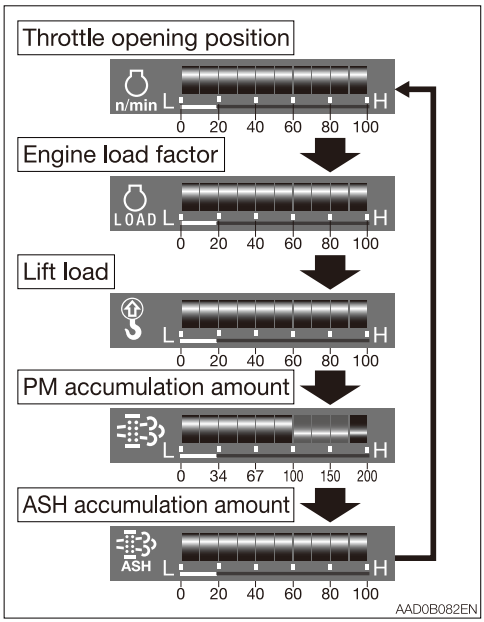


This gauge displays the throttle opening position, engine load factor, lift load factor, PM accumulation amount and ASH accumulation amount.

**Touch operation**

Tap the symbol of the function, to the left of the gauge, to be displayed on the screens (except the opening screen).

**Dial operation**

Select the symbol of the function, to the left of the gauge, to be displayed on the screens (except the opening screen), and then press the dial.

- The lift load factor is displayed if there is no change in the throttle opening position for five seconds after the lift alarm switch is turned on.
- The throttle opening position is displayed if it is increased/decreased by at least 5%.

**Throttle opening position**
Displays the throttle opening position by adjusting the dial.

**Engine load factor**
Displays the engine load factor.

**Lift load factor**
Displays the lift load factor.

**PM accumulation amount**
Displays the estimated amount of particulate matter (PM) accumulated.
When the PM (particulate matter) accumulation amount exceeds a certain level, the DPF manual regeneration symbol starts flashing on the display and the alarm starts sounding. Perform the DPF manual regeneration.
Refer to “Standstill regeneration/Stop switch” on page 2-76.

**ASH accumulation amount**
Displays the ASH accumulation amount.
When the ASH accumulation amount exceeds a certain level in the DPF, the ASH accumulation warning indicator starts flashing and the alarm starts sounding.
Refer to “Replacing the diesel particulate filter” on page 5-88.

**57. Auto-cruise level indicator**
Gray .....Auto-cruise mode is disabled.
Green ...Auto-cruise mode is enabled.

The travel speed in the auto-cruise mode changes corresponding to the value of the display level. The higher the value of the level, the faster the travel speed becomes.
The value of the level can be changed with the cruise control switch/lever.
Refer to “Cruise control switch” on page 2-67.
Refer to “Cruise control lever (if equipped)” on page 2-71.

**58. Reverse rotation fan indicator lamp**
It lights up when the reverse rotation fan function is set to ON. The dirt accumulated in the radiator fin is blown out. The symbol flashes during the reverse rotation. After the reverse rotation operating time set in the fan setting is elapsed, the fan rotation returns to normal.
Refer to “8. Fan setting” on page 2-57.

**59. Mute symbol**
**Touch operation**
Tap the symbol to set to mute. Tapping the symbol again will cancel mute.

**Dial operation**
Select the symbol and press the dial to set to mute. Pressing the dial again will cancel mute.

**60. Joystick steering indicator lamp**
Gray .....Joystick steering is disabled.
Green ...Joystick steering is enabled.

The display of the lamp changes corresponding to the state of the joystick steering function.
Refer to “Joystick steering” on page 8-39.

**61. Auto digging brake indicator lamp**
Lights up when the auto digging brake switch is set to ON.
Refer to “Auto digging brake switch” on page 2-74.

**63. Boom suspension pilot lamp (If equipped)**
This pilot lamp lights up when the boom suspension switch is set to ON.
The boom suspension is activated while the lamp is ON.
Refer to “Boom suspension switch (If equipped)” on page 2-71.

## JOG DIAL OPERATION

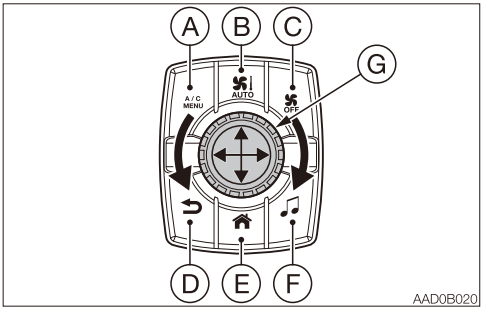


**A. Air conditioner (A/C) menu switch**
Displays the air conditioner screen.

**B. Air conditioner AUTO switch**
Sets the air conditioner to the auto mode.

**C. Air conditioner OFF switch**
Turns off the air conditioner.

**D. Return switch**
Displays the previous screen.
This switch is also used to cancel changes made in each setting. The screen returns to the Home screen if this switch is pressed in the Menu screen.

**Note:** Pressing the Return switch in the Home screen displays the Menu screen.

**E. Home switch**
Displays the Home screen.

**F. Radio switch**
Displays the radio screen.

**G. Dial**
When the jog dial is moved up/down or left/right or it is turned clockwise/counterclockwise, the cursor moves accordingly.
Press the dial to conform or to enter the edit mode.

<Edit mode>
Moving the dial up or to the right increases the set value. Or turning clockwise increases the set value. Moving the dial down or to the left decreases the set value. Or turning counterclockwise decreases the set value. Press and hold the dial for one second to rapidly increase/decrease the value.

**Note:** When using the touch operation, touching and holding the down arrow symbol ( ▽ ) or the up arrow symbol ( △ ) rapidly increases/decreases the value.

## TOUCH OPERATION

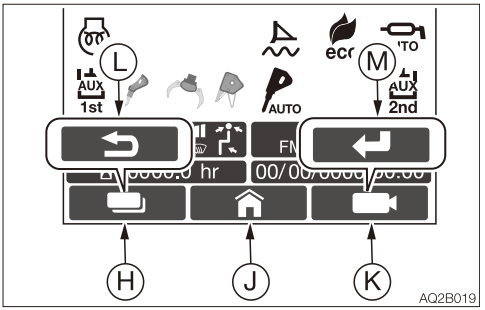


**H. Menu symbol**
Displays the Menu screen.

**J. Home symbol**
Displays the Home screen.

**K. Camera image symbol (If equipped)**

**⚠ WARNING**

**Do not look at the images produced by the camera when traveling in reverse. Move in reverse while visually looking at the direction of travel.**

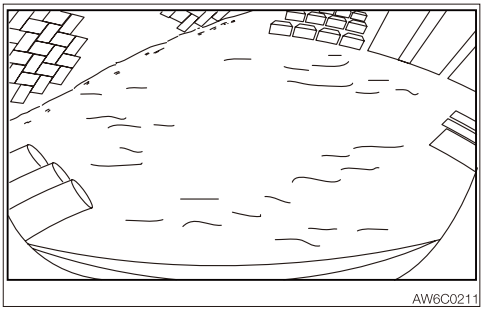


1. To display the images taken by the rear view camera, tap the camera image symbol in the Home screen.
2. To return to the Home screen from the camera image screen, touch the camera image symbol again.

**L. Return symbol**
Displays the previous screen.
This symbol is also used to cancel changes made in each setting. The screen returns to the Home screen if this symbol is tapped in the Menu screen.

**M. Enter symbol**
Use this symbol to confirm or execute the setting made by each symbol.
To clear the trip meter being displayed, select and hold this symbol for three seconds.

## SCREEN NAVIGATION

• Menu screen

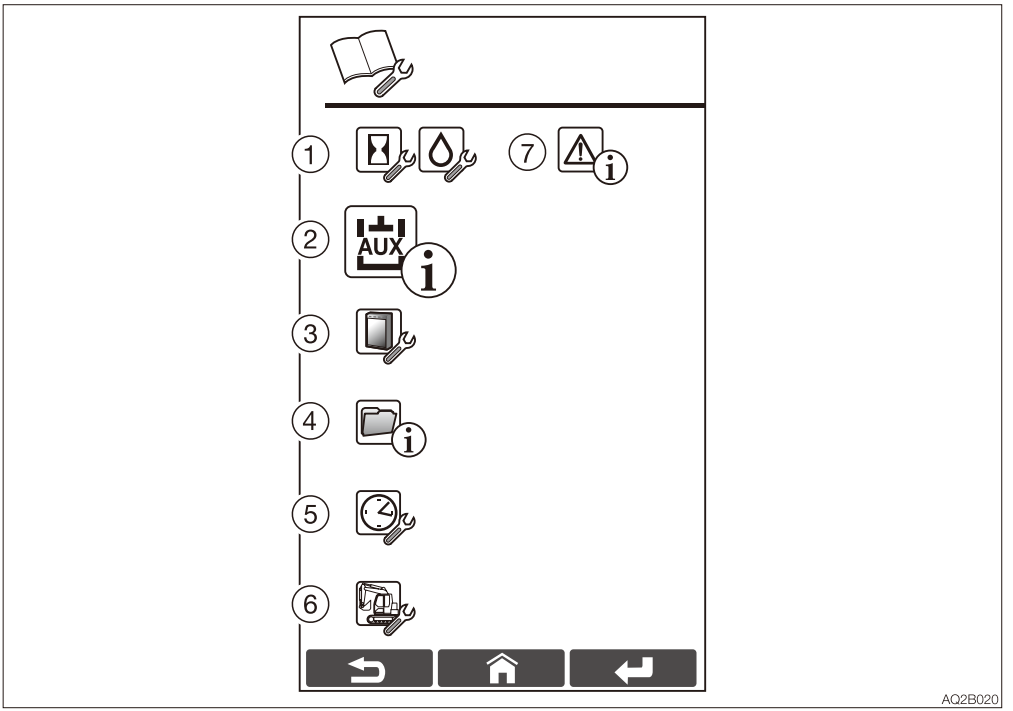


To go to the Menu screen when in the Home screen, tap the Menu symbol or press the Return switch.

(1) Trip meter setting
(2) Auxiliary line flow rate display
(3) LCD setting
(4) Data display
(5) Date and time setting
(6) Machine setting
(7) Error code display

**Note:** The wrench symbol indicates the "setting is possible state" and the ( i ) mark indicates information only.

**Touch operation**
Tap the symbol of the item to be set.
To return to the Home screen when in the Menu screen, tap the Return symbol or the Home symbol.

**Dial operation**
Use the dial to select the symbol of the item to be set, and then press the dial. (The selected symbol is displayed enlarged.)
To return to the Home screen when in the Menu screen, press the Return switch or the Home switch.

## (1) TRIP METER SETTING

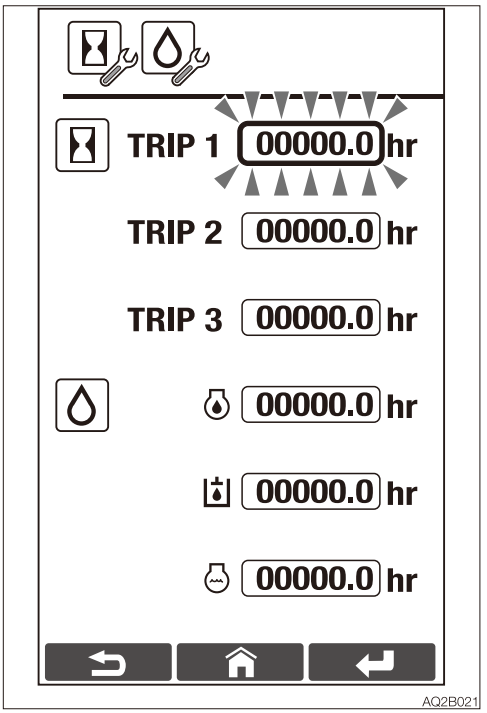


Six patterns of desired operating hours can be set.
To return to the Menu screen, tap the Return symbol or press the Return switch.

**Touch operation**
Tap the item to be selected.
The numerical value in the selected item flashes.
Tapping and holding the item or the Enter symbol for three seconds clears the flashing value.

**Dial operation**
Use the dial to select the item.
The numerical value in the selected item flashes.
Pressing and holding the dial for three seconds clears the flashing value.

## (2) AUXILIARY LINE FLOW RATE DISPLAY

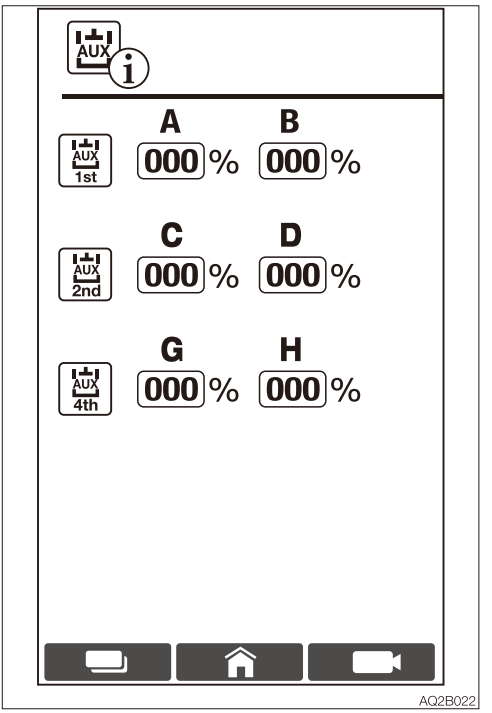


Displays the flow rate of the Auxiliary 1st, 2nd and 4th.
The flow rate cannot be changed.
To return to the Menu screen, tap the Return symbol or press the Return switch.

## (3) LCD SETTING

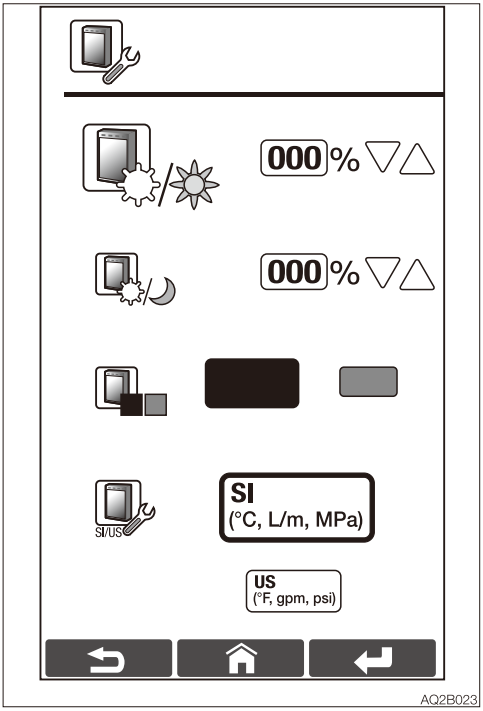


The display setting can be changed.
To return to the Menu screen, tap the Return symbol or press the Return switch.

• **Brightness setting**

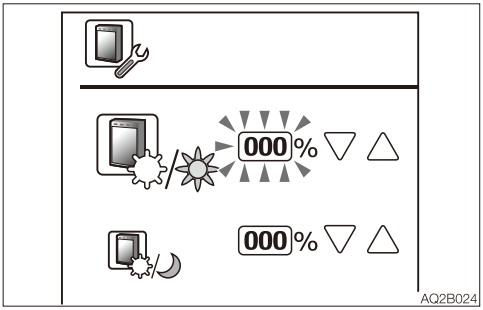


The brightness of the LCD is set to between 1 and 100%.
The brightness changes each time the adjustment is made.

**Touch operation**
Tap the down ( ▽ ) or up ( △ ) arrow symbol of the brightness setting. The numeric value starts flashing to indicate that it is ready to be edited.
Use the down ( ▽ ) or up ( △ ) arrow symbol to change the value, and then tap the Enter symbol to complete the editing.

**Dial operation**
Select the brightness setting symbol and press the dial. The numeric value starts flashing to indicate that it is ready to be edited. Use the dial to change the value, and then press the dial to complete the editing.

Adjustment to the night (day) mode while in the day (night) mode cannot be synchronized.

• Background color setting

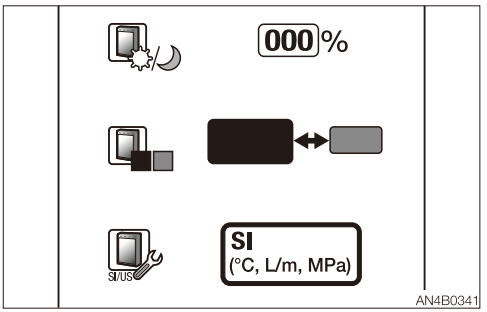


The current background color is displayed enlarged.

**Touch operation**
Tapping the desired color will change the background color to the one just tapped.

**Dial operation**
Select the background color setting symbol and press the dial to select the desired color. (The current setting is displayed enlarged.)

• Unit setting

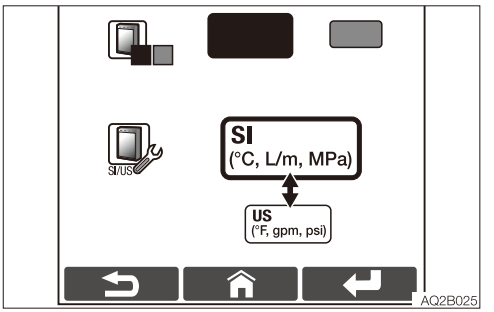


The current unit is displayed enlarged.

**Touch operation**
Tapping the desired unit will change the unit to the one just tapped.

**Dial operation**
Select the unit setting symbol and press the dial to select the desired unit.
(The current setting is displayed enlarged.)

## (4) DATA DISPLAY

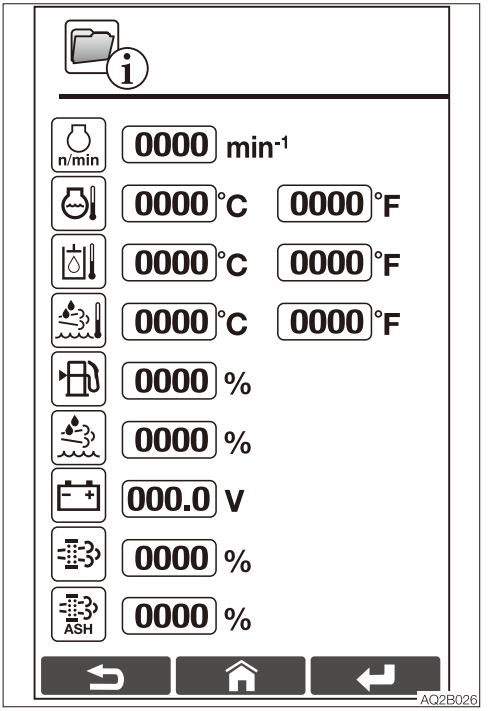


Displays various data. The setting cannot be changed.
To return to the Menu screen, tap the Return symbol or press the Return switch.

**Display items**
- Engine RPM
- Coolant temperature
- Hydraulic oil temperature
- DEF/AdBlue® temperature
- Fuel level
- DEF/AdBlue® level
- Battery voltage
- PM accumulation amount
- Ash accumulation amount

**Note:** For the data item not applicable to this machine, N/A is displayed.

## (5) DATE AND TIME SETTING

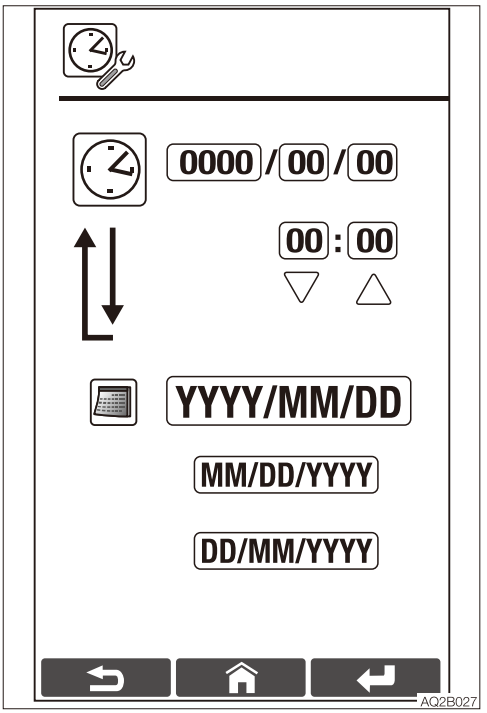


The year, month, date, hour and minute can be set. (Effective year range: 2010 to 2099)
To return to the Menu screen, tap the Return symbol or press the Return switch.

• Date/Time setting

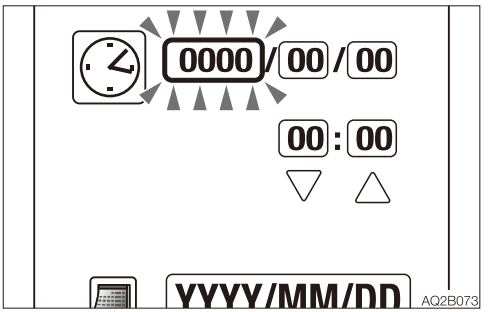


**Touch operation**
Tap the item of the date or time to be set. The numeric value starts flashing to indicate that it is ready to be edited.
Use the down ( ▽ ) or up ( △ ) arrow symbol to change the value, and then tap the Enter symbol to complete the editing.

**Dial operation**
Select the clock symbol and press the dial to display the field. Select the item to be set and press the dial. The numeric values start flashing to indicate that it is ready to be edited. Use the dial to change the value, and then press the dial to complete the editing.

• Date/Time display format




The current calendar display format is displayed enlarged.

**Touch operation**
Tapping the desired format will change the calendar display format to the one just tapped.

**Dial operation**
Select the calendar symbol and press the dial to select the desired calendar format. (The current setting is displayed enlarged.)

## (6) MACHINE SETTING

• Machine setting screen

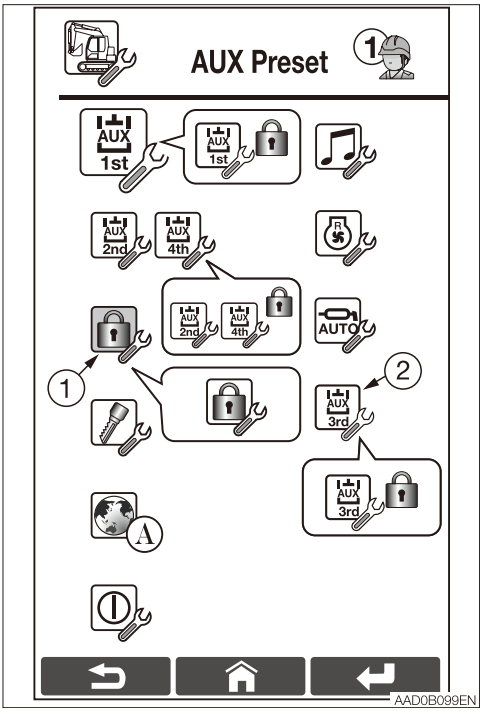


The settings made to the machine can be changed.
To return to the Menu screen, tap the Return symbol or press the Return switch.

**Touch operation**
Tap the item to be selected.

**Dial operation**
Use the dial to select the item, and then press the dial to confirm. (The selected item is displayed enlarged.)

**Note:** When the lock setting is enabled, the key symbol mark is added to the upper right of the symbol.
**Note:** When the lock setting is enabled, you are requested to enter the password when changing the setting, setting the lock, and changing the password.
**Note:** When the password setting is disabled, the lock setting symbol (1) is displayed in gray background.
**Note:** When the function is not available, the auto pressure release setting symbol (2) is not displayed.

• **Preset patterns**

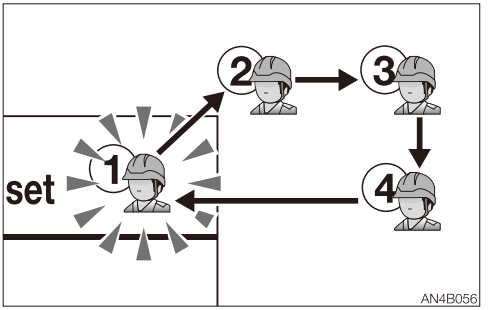


Four setting patterns can be made in the auxiliary 1st and 2nd/4th.
You can also set a password for each pattern.

**Touch operation**
While in the machine setting screen, tap the face symbol in the upper right of the screen to switch to the desired pattern.

**Dial operation**
While in the machine setting screen, select the face symbol in the upper right of the screen, and then press the dial to select the desired pattern.

• Requesting password screen

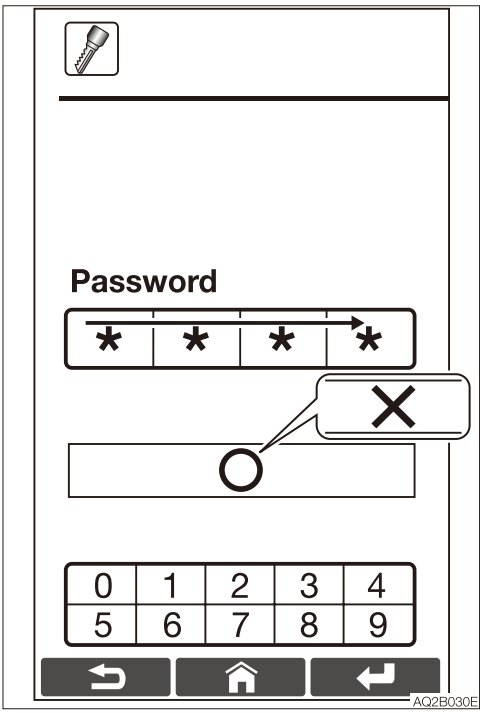


When the password setting is enabled, you are requested to enter the password when setting the service, lock, password, and auto pressure release.

**Touch operation**
Enter a 4-digit numeric password by tapping the numbers.

**Dial operation**
A 4-digit numeric password is entered using the dial.
The selected number flashes.
Select the number to be set and press the dial.

Enter the current password. If it is correct, the setting screen appears. If it is not, a cross (X) is displayed.
It is not necessary to enter the password again once you enter the password on the service setting screen.

### 1. Auxiliary 1st flow rate setting

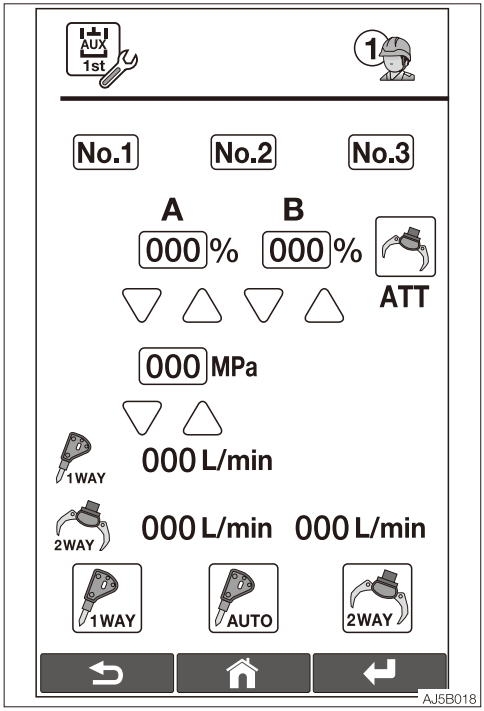


In addition to using the machine setting screen, the auxiliary 1st flow rate setting can be selected by either of the following ways:

- Tap and hold the auxiliary 1st flow rate indicator lamp on the Home screen for at least one second.
- Use the cursor to select the auxiliary 1st flow rate indicator lamp on the Home screen and press the dial for at least one second.

For the flow rate and pressure in the auxiliary 1st, three setting patterns can be made. The three patterns set are shown on the Home screen to choose from. To return to the machine setting screen, tap the Return symbol or press the Return switch.

**Note:** Changing the preset pressure is an optional function, and so it may not be available depending on the machine used. If the function is not available, the pressure is displayed as “N/A”.

**Touch operation**

Tap the pattern number to be set.
Use the down ( ▽ ) or up ( △ ) arrow symbol of the item to be set to change the value, and then tap the Enter symbol to complete the editing.

**Dial operation**

Select the pattern number to be set and press the dial to display the fields. Select the item to be set and press the dial. The numeric value starts flashing to indicate that it is ready to be edited. Use the dial to change the value, and then press the dial to complete the editing.

| Initial condition | Standard flow | Variable range |
|---|---|---|
| No.1 | 60%=72 L/min (19.0 US gpm) | 10 to 60% |
| No.2 | 45%=54 L/min (14.3 US gpm) | 10 to 60% |
| No.3 | 30%=36 L/min (9.5 US gpm) | 10 to 60% |

| Maximum flow rate | High-flow | Variable range |
|---|---|---|
| No.1 to 3 | 100%=120 L/min (31.7 US gpm) | 61 to 100% |

The table shows the 1-way flow rate when there is no load.

**Note:** The 1-way flow can be performed only when the switch (A) is used.

| Initial condition | A/B common, standard pressure | Variable range |
|---|---|---|
| No.1 to 3 | 21 MPa | 0 MPa to 21 MPa (0 psi to 3045 psi) |

| 1st service high-pressure specification | A/B common, standard pressure | Variable range |
|---|---|---|
| No.1 to 3 | 27 MPa | 0 MPa to 27 MPa (0 psi to 3916 psi) |

The pressure can be set in increments of 2 MPa.

**Note:** Depending on the value set or hydraulic oil temperature, vibration could occur in the piping; this is not a malfunction.

• Attachment select screen

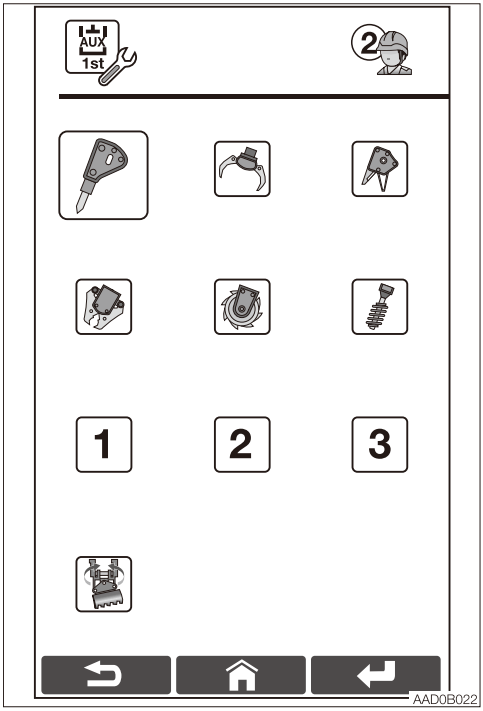


**Touch operation**
Tap the “ATT” to go to the attachment select screen. Tap the desired item to be set. (The selected item is displayed enlarged.) Tap the Return symbol to go the auxiliary 1st setting screen.

**Dial operation**
Pressing the dial when the field is at “ATT” goes to the attachment select screen. Use the dial to select the item to be set, and then press the dial to confirm. (The selected item is displayed enlarged.) Once the attachment selection is done, the screen automatically returns to the auxiliary 1st flow rate setting.

• Flow selection

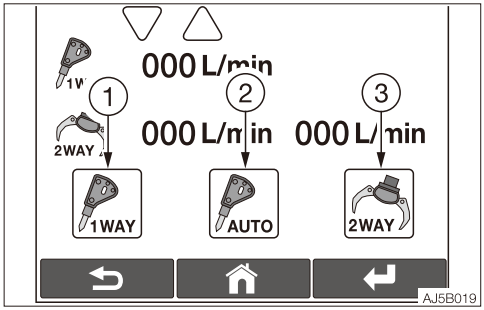


Use this symbol to change the direction of hydraulic oil flow in the Aux. 1st line.
(1) One-way flow (When using a hydraulic breaker)
(2) Auto tank (The one-way flow can be set only when the button “A” of the Aux. 1 is pressed. The tank circuit is automatically opened.)
(3) Two-way flow (When using a reversible attachment)

**Touch operation**
Tap the symbol of the setting to be set.

**Dial operation**
Select the desired “No.” and press the dial. Moving the dial downward displays the (1), (2) or (3) enclosed by the blue frame. Press the dial to select he desired setting. (The current setting is displayed enlarged.)

### 2. Auxiliary 2nd/4th flow rate setting

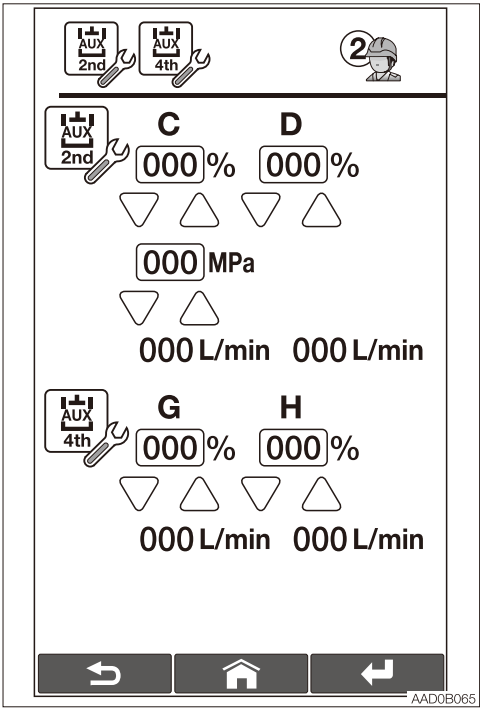


For the flow rate in the auxiliary 2nd/4th, one setting pattern can be made. To return to the machine setting screen, tap the Return symbol or press the Return switch.

**Note:** Changing the preset pressure is an optional function, and so it may not be available depending on the machine used. If the function is not available, the pressure is displayed as “N/A”.

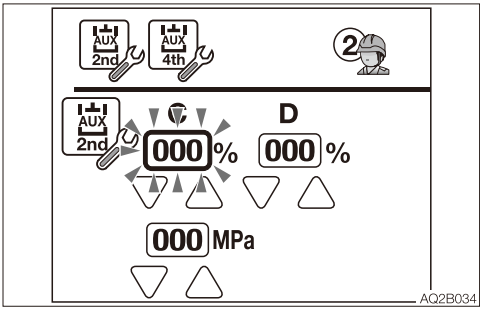


**Touch operation**
Use the down ( ▽ ) or up ( △ ) arrow symbol of the item to be set to change the value, and then tap the Enter symbol to complete the editing.

**Dial operation**
Select the item to be set and press the dial. The numeric value starts flashing to indicate that it is ready to be edited. Use the dial to change the value, and then press the dial to complete the editing.

| Initial condition | C/D, G/H common, standard flow | Variable range |
|---|---|---|
| Auxiliary 2nd | C/D 100%=55 L/min (14.5 US gpm) | 10 to 100% |
| Auxiliary 4th | G/H 100%=55 L/min (14.5 US gpm) | 10 to 100% |

| Initial condition | C/D, G/H common, standard pressure | Variable range |
|---|---|---|
| Auxiliary 2nd | C/D 21 MPa | 0 MPa to 21 MPa (0 psi to 3045 psi) |

The pressure can be set in increments of 2 MPa.

**Note:** Depending on the value set or hydraulic oil temperature, vibration could occur in the piping; this is not a malfunction.

**3. Lock setting**

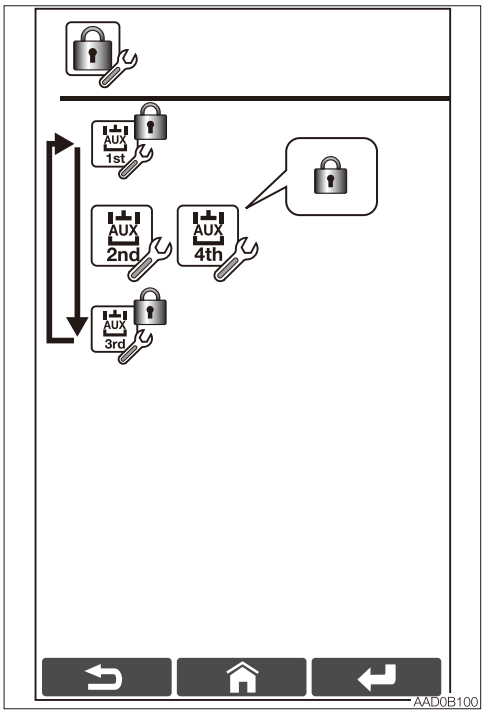


A password can be set as compulsory when the service or auto pressure release setting is made.
To return to the machine setting screen, tap the Return symbol or press the Return switch.

**Touch operation**
Tap the item to be set to lock or unlock.

**Dial operation**
Use the dial to select the item, and then press the dial to lock or unlock.
(The selected item is displayed enlarged.)

Lock symbol is lit: Enabled
Lock symbol is off: Disabled

### 4. Password setting

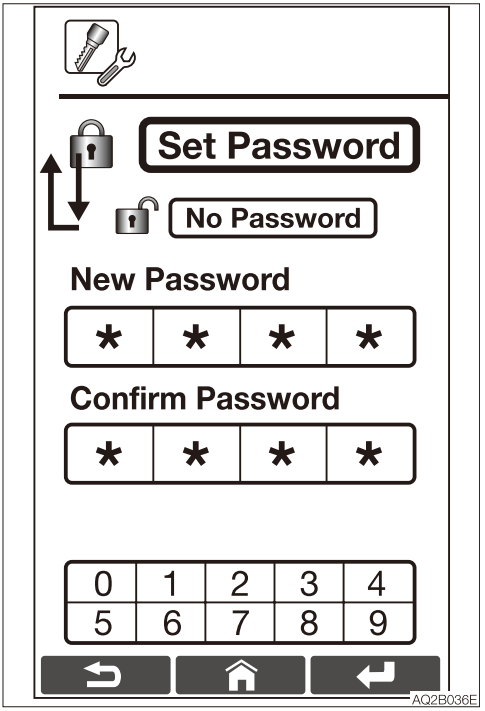


The password can be set. To return to the machine setting screen, tap the Return symbol or press the Return switch.

**Note:** In case you forget the password, contact your sales dealer.

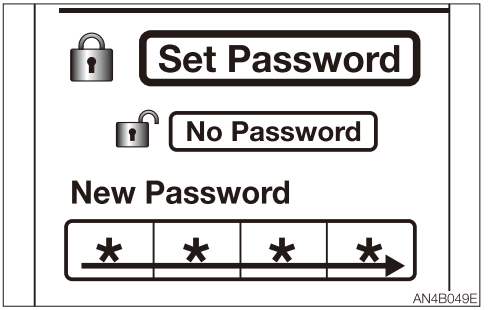


**Touch operation**
Tap “Set Password”.

**Dial operation**
Use the dial to select “Set Password”, and then press the dial to confirm. (The number “0” starts flashing.)

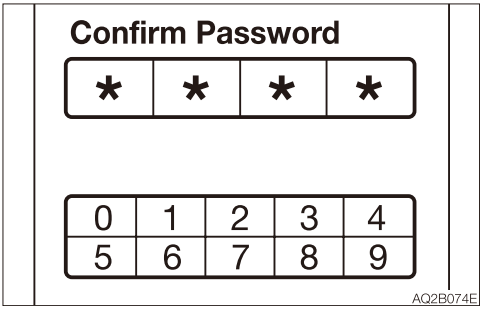


**Touch operation**
Enter a 4-digit numeric password by tapping the numbers.

**Dial operation**
Enter a 4-digit numeric password by using the dial.
(The selected number flashes.)

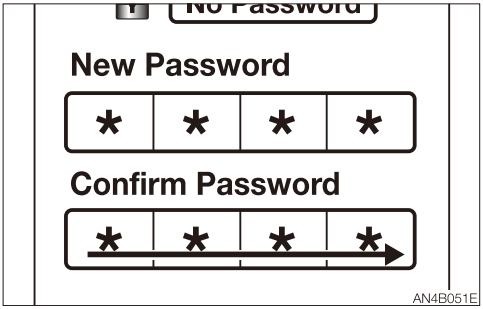


Enter a password in “New Password”, and then enter the same password in “Confirm Password”.

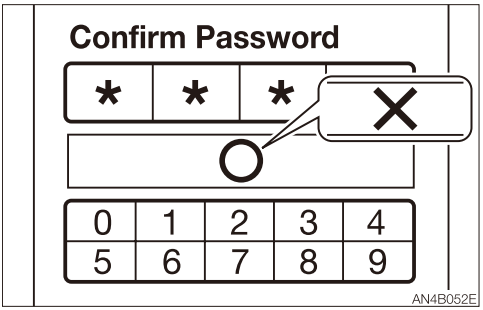


If the two passwords are identical, a circle (O) is displayed to indicate that the setting is enabled. To return to the machine setting screen, tap the Return symbol or press the Return switch.
If a cross (X) is displayed, enter the password in “Confirm Password” again.

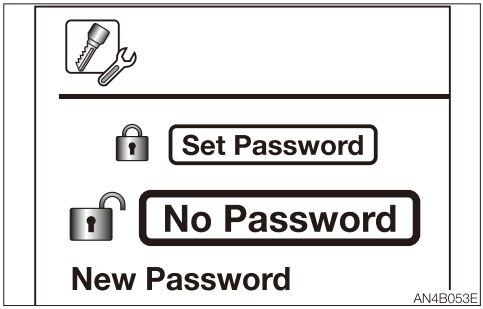


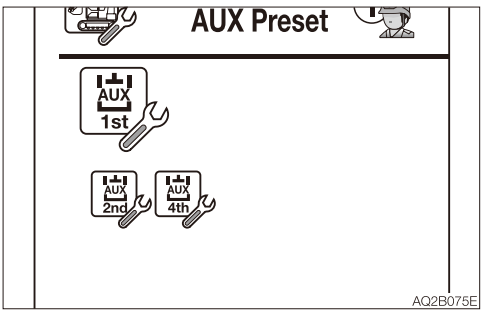


Selecting “No Password” and tapping the Enter symbol or pressing the dial disables the password setting and goes to the machine setting screen. When the password setting is cancelled, the service lock symbol is not displayed on the machine setting screen.

### 5. Language selection

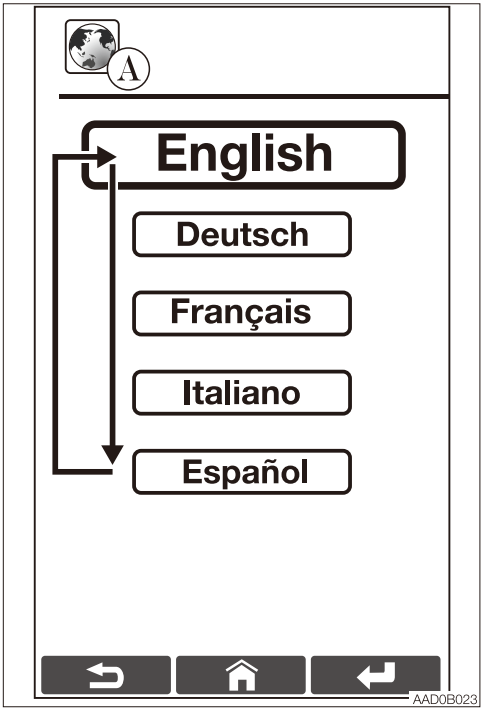


The language used can be selected.
To return to the machine setting screen, tap the Return symbol or press the Return switch.

**Touch operation**
Tapping the desired language will change the language to the one just tapped.

**Dial operation**
Use the dial to select the desired language, and then press the dial to confirm.
(The selected item is displayed enlarged.)

### 6. ON/OFF setting

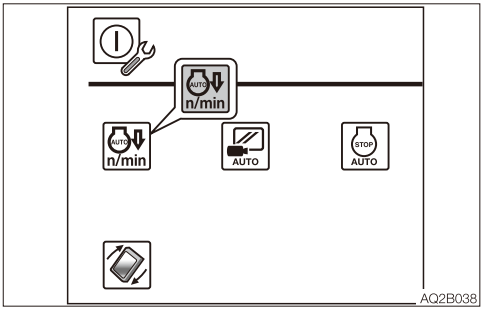


You can set the following functions to ON or OFF: automatic deceleration, auto camera mode, engine auto stop and display rotation.
To return to the machine setting screen, tap the Return symbol or press the Return switch.
**Note:** The display differs according to the specifications.

**Touch operation**
Tap the item to be set to ON or OFF.

**Dial operation**
Use the dial to select the item, and then press the dial to set to ON or Off.

White background: ON
Gray background: OFF

### 7. Radio region setting

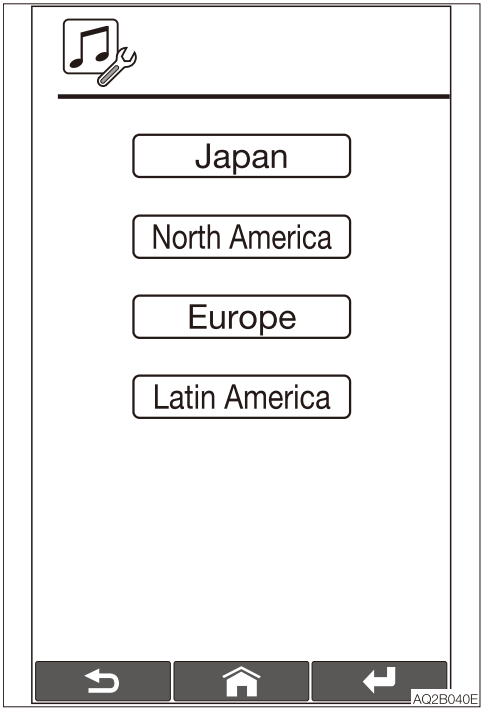


Set the radio region to be used.
The region can be changed only when the radio is turned off.
To return to the machine setting screen, tap the Return symbol or press the Return switch.

**Touch operation**
Tapping the desired region will change the region to the one just tapped.

**Dial operation**
Use the dial to select the desired radio region, and then press the dial to confirm.

### 8. Fan setting

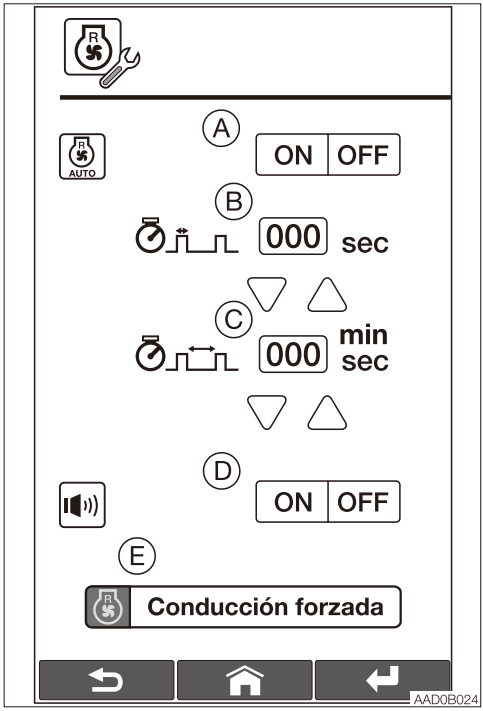


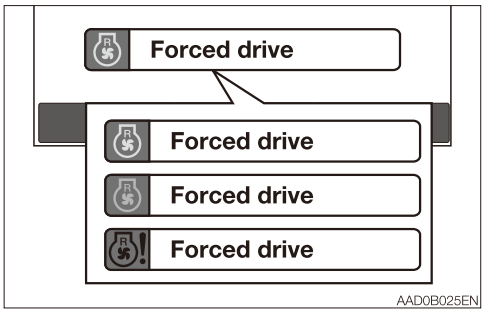

You can set the automatic reverse rotation fan to ON or OFF, set the reverse rotation operating time and operating interval, set the buzzer to ON or OFF, and start and stop the reverse rotation fan.
To return to the machine setting screen, tap the Return symbol or press the Return switch.

A: Set the automatic reverse rotation fan to ON or OFF.

**Touch operation**
To switch the automatic reverse rotation fan to ON or OFF, tap the symbol “A”.

**Dial operation**
To switch the automatic reverse rotation fan to ON or OFF, select the symbol “A” with the dial and press the dial.

B: Set the reverse rotation operating time.
C: Set the operating interval.

**Touch operation**
Use the down ( ▽ ) or up ( △ ) arrow symbol of the item to change the value, and then tap the Enter symbol to complete the editing.

**Dial operation**
Select the item to be set and press the dial. Use the dial to change the value, and then press the dial to complete the editing.
The numerical value flashes while editing.

D: Set the buzzer to ON or OFF.

**Touch operation**
To switch the buzzer to ON or OFF, tap the symbol “D”.

**Dial operation**
To switch the buzzer to ON or OFF, select the symbol “D” with the dial and press the dial.

E: Displays the state of the reverse rotation fan.

**Touch operation**
Tap the symbol “E” to start or stop the reverse rotation fan.

**Dial operation**
Select the symbol “E” with the dial and press the dial to start or stop the reverse rotation fan.




White: The reverse rotation fan stops.
Tap the symbol “E” or press the dial to start the operation.

Green: The reverse rotation fan operates.
Tap the symbol “E” or press the dial to stop the operation.

Red: The reverse rotation fan cannot be activated. Refer to “If a warning lamp flashes” on pages 6-16 to 6-19.

### 9. Auto greasing setting

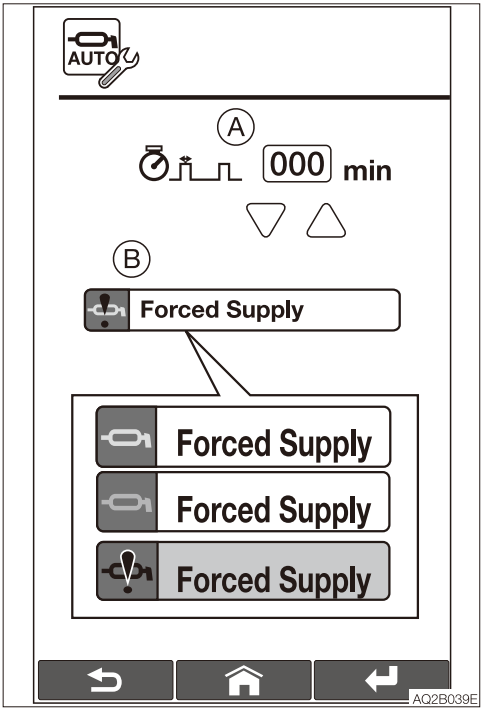


You can set the auto greasing time, start greasing or stop greasing.
To return to the machine setting screen, tap the Return symbol or press the Return switch.

A: Set the auto greasing time.

**Touch operation**
Use the down ( ▽ ) or up ( △ ) arrow symbol of the item to change the value, and then tap the Enter symbol to complete the editing.

**Dial operation**
Select the item to be set and press the dial. Use the dial to change the value, and then press the dial to complete the editing.
The numerical value flashes while editing.

B: Displays the greasing condition.

**Touch operation**
Tap the symbol “B” to start or stop greasing.

**Dial operation**
Use the dial to select the symbol “B”, and then press the dial to start or stop greasing.

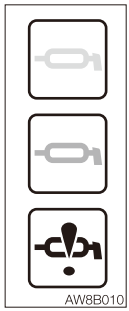


..... White: Grease pump is stopped.
To start greasing, tap the symbol “B” or press the dial.

..... Green: Grease pump is operating.
To start greasing, tap the symbol “B” or press the dial.

..... Red: Greasing is disabled. Grease tank is empty or fuse is blown.
Refer to “If a warning lamp flashes” on pages 6-16 to 6-19.

### 10. Auto pressure release setting (if equipped)

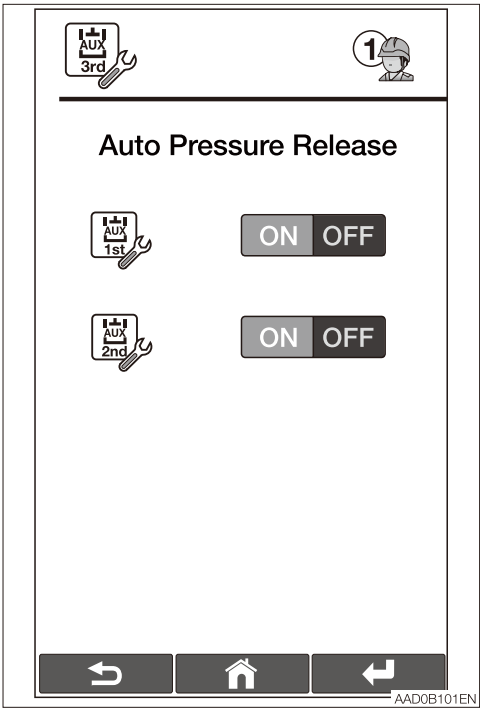


You can set the auto pressure release setting to ON or OFF when using the auxiliary 3rd. To return to the machine setting screen, tap the Return symbol or press the Return switch.

• ON/OFF setting

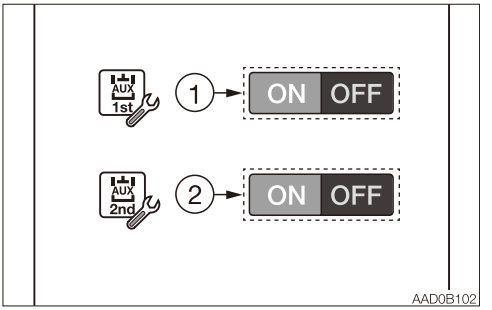


You can set the following functions to ON or OFF.
(1) Auxiliary 1st auto pressure release
(2) Auxiliary 2nd auto pressure release

**Touch operation**
Tap the ON/OFF symbol to be set to ON or OFF.

**Dial operation**
Select the ON/OFF symbol, and then press the dial to set to ON or OFF.

**Note:** This setting is kept even after the key is set to OFF.

## (7) ERROR CODE DISPLAY

- **Vehicle error code/ECM error code display screen**

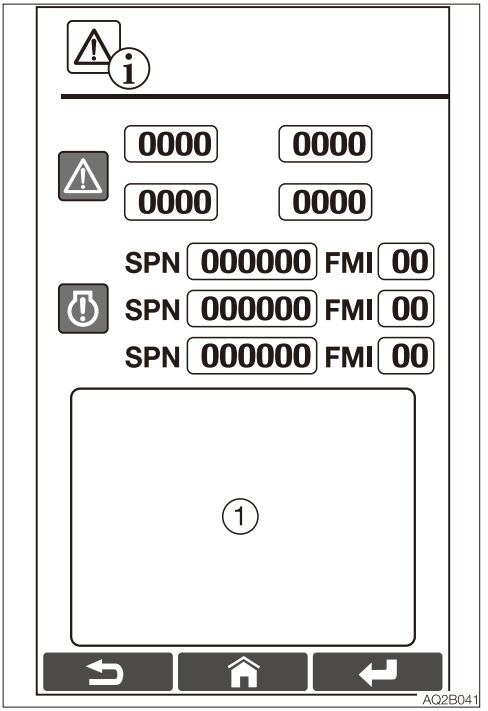


To return to the Menu screen, tap the Return symbol or press the Return switch.

⚠.....Vehicle error code
Displays four error codes, with the latest code in the upper left.
Refer to “Vehicle error code list” on pages 6-20 to 6-23.

.....ECM error code
Engine ECM (Engine Control Module) error code
Displays three error codes, with the latest code at the top.
Refer to “Engine error code list” on pages 6-24 to 6-56.

On the description screen (1), description of each error code is displayed.

**Touch operation**
If multiple error codes are displayed, tap the error code to be displayed.

**Dial operation**
If multiple error codes are displayed, use the dial to select the error code to be displayed.

**IMPORTANT: If an error code appears, immediately stop the operation and contact a Takeuchi sales or service outlet for help.**

- Air conditioner error code display screen

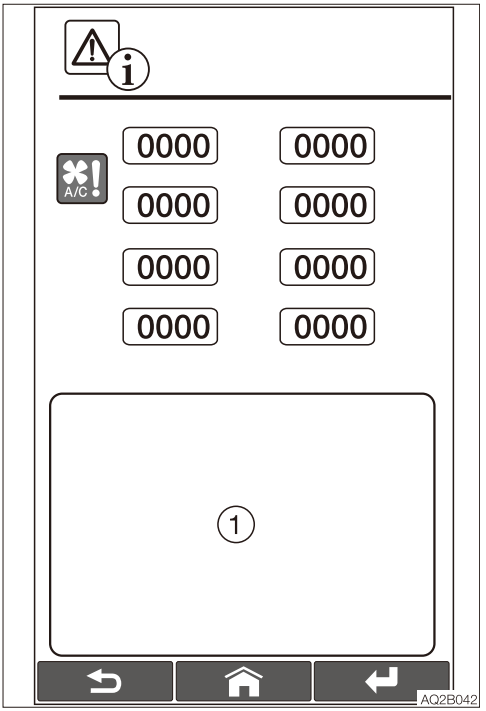


To return to the Menu screen, tap the Return symbol or press the Return switch.

**Touch operation**
When in the error code display screen, tap the Enter symbol to go to the air conditioner error code display screen. If multiple error codes are displayed, tap the error code to be displayed.

**Dial operation**
When in the error code display screen, press the dial to go to the air conditioner error code display screen. If multiple error codes are displayed, use the dial to select the error code to be displayed.

- Vehicle past error code display screen

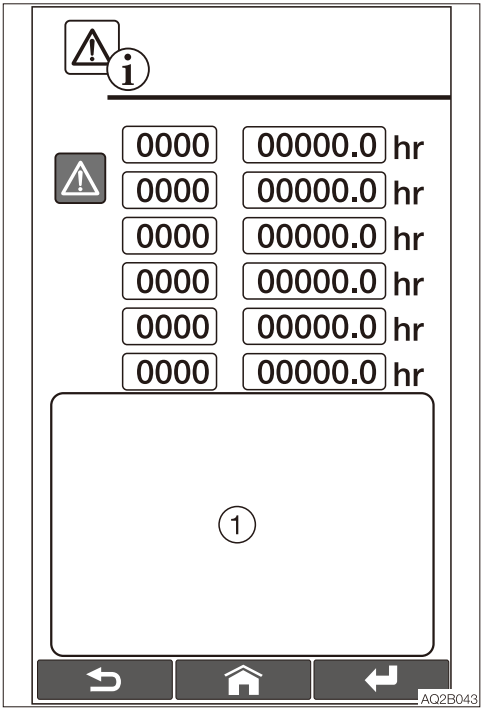


To return to the Menu screen, tap the Return symbol or press the Return switch.

**Touch operation**
When in the air conditioner error code display screen, tap the Enter symbol to go to the vehicle past error code display screen. If multiple error codes are displayed, tap the error code to be displayed.

**Dial operation**
When in the air conditioner error code display screen, press the dial to go to the vehicle past error code display screen. If multiple error codes are displayed, use the dial to select the error code to be displayed.

• Engine past error code display screen

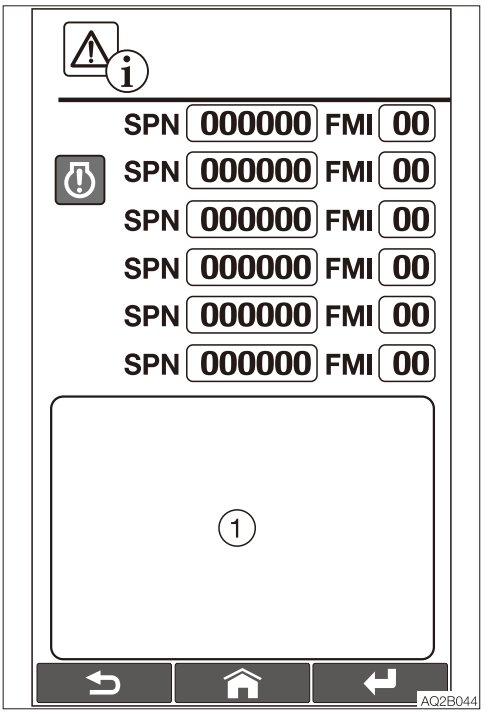


To return to the Menu screen, tap the Return symbol or press the Return switch.

**Touch operation**
When in the vehicle past error code display screen, tap the Enter symbol to go to the engine past error code display screen. If multiple error codes are displayed, tap the error code to be displayed.

**Dial operation**
When in the vehicle past error code display screen, press the dial to go to the engine error code display screen. If multiple error codes are displayed, use the dial to select the error code to be displayed.

## SWITCHING IMAGES

- **Changing the background color (day/night)**

Day




Night




Turn on the light switch on any screen to decrease the display brightness and to enter the night mode.

### Camera image

**⚠ WARNING**

**Do not look at the images produced by the camera when traveling in reverse. Move in reverse while visually looking at the direction of travel.**

**Note:** Depending on the specifications, if the rear view camera image is not displayed for 30 seconds while the safety lock lever is at the Release position, the screen changes to the one with the rear view camera image.

**<Rear view camera (If equipped)>**

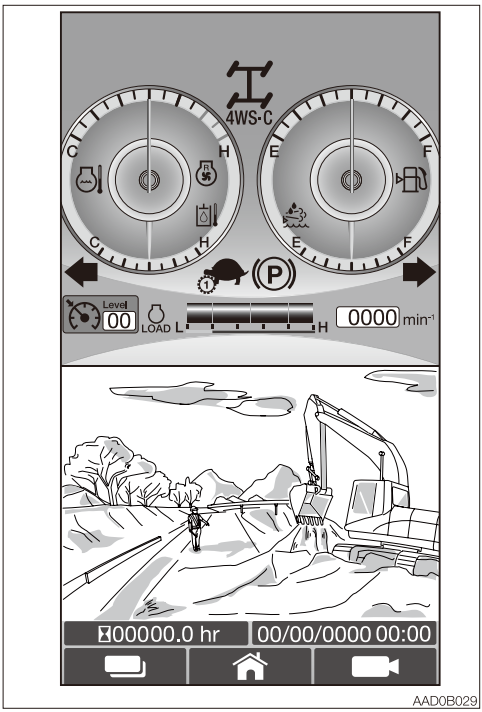


1. Tap the camera image symbol or press the camera image switch on the Home screen to display the images taken by the rear camera.
2. Tap the camera image symbol again or press the camera image switch again to return to the Home screen.

**<270-degree view camera system (If equipped)>**

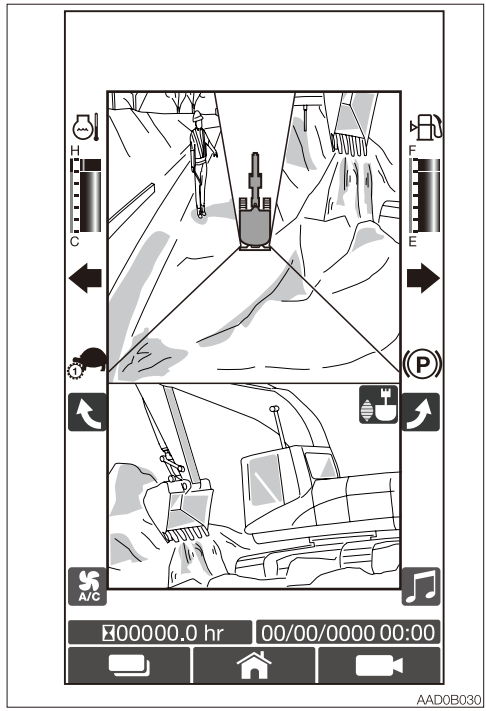


1. When in the Home screen, tap the camera image symbol or press the camera image switch to display the images taken by the three cameras for three different views.
2. Tap the ↰ or ↱ to view the images taken by the cameras as follows:
   ↰....From Above + Rear → From Above + Left → From Above + Right → From Rear + Right → From 3 cameras → From Above + Rear
   ↱....From Above + Rear → From 3 cameras → From Rear + Right → From Above + Right → From Above + Left → From Above + Rear
3. Tap the camera image symbol again or press the camera image switch again to return to the Home screen.

# SWITCHES AND BUTTONS

## 4-SPEED TRAVEL SWITCHES (LOW/ HIGH-SPEED TRAVEL SWITCH, GEAR SHIFT SWITCH)

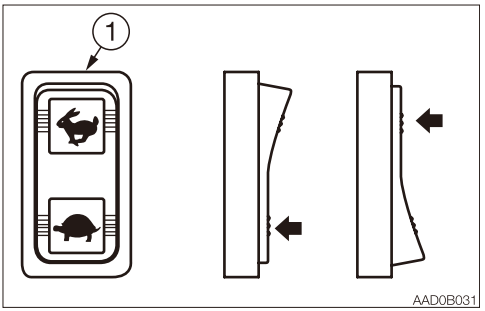


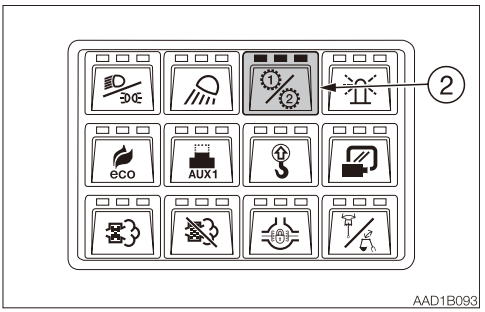


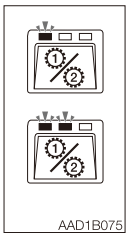


..... Gear 1

..... Gear 2

**IMPORTANT: Before changing the speed using the 4-speed travel switches, stop the machine and do the following. Failure to do so could result in machine failure.**
- **Lock the brake pedal.**
- **Fully lower the safety lock lever to the unlock position.**



Low-speed travel 1: 0 to 5.6 km/h (3.5 mph)
Press the gear shift switch (2) to select Gear 1. Tap the “Turtle” symbol on the low/high-speed travel switch (1).



High-speed travel 1: 0 to 15.8 km/h (9.8 mph)
Press the gear shift switch (2) to select Gear 1. Tap the “Hare” symbol on the low/high-speed travel switch (1).



Low-speed travel 2: 0 to 10.7 km/h (6.6 mph)
Press the gear shift switch (2) to select Gear 2. Tap the “Turtle” symbol on the low/high-speed travel switch (1).



High-speed travel 2: 0 to 29.5 km/h (18.3 mph)
Press the gear shift switch (2) to select Gear 2. Tap the “Hare” symbol on the low/high-speed travel switch (1).

For the machines with the 20 km/h travel speed, the speed changes as follows.
Low-speed travel 1:
0 to 5.6 km/h (3.5 mph)
High-speed travel 1:
0 to 10.5 km/h (6.5 mph)
Low-speed travel 2:
0 to 10.7 km/h (6.6 mph)
High-speed travel 2:
0 to 20.0 km/h (12.4 mph)

## CRUISE CONTROL SWITCH

**⚠ WARNING**

**Do not use this switch on the following roads.**

- **Heavy traffic roads where a safe spacing between vehicles cannot be kept.**
- **Roads with many steep down slopes or curves.**
- **Slippery roads due to freezing or snowing.**

**Note:** When traveling the slopes (up or down), a constant vehicle speed cannot be retained due to the gradient.

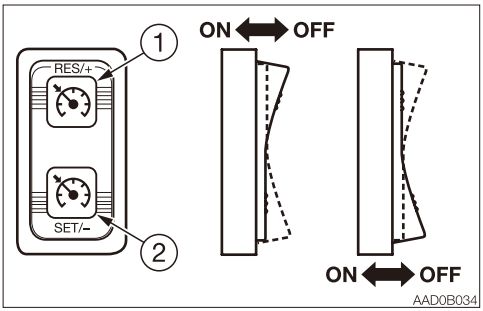


The cruise control (automatic constant speed traveling device) is a feature that enables to retain a desired vehicle speed without operating the travel pedal.

### Setting a speed

You can change the cruise level while the machine stops or during the auto-cruise mode. The travel speed changes according to the cruise level.
RES (Resume) (1): Cruise level +1
SET (Set) (2): Cruise level -1

### Changing to auto-cruise mode

RES (Resume) (1): The machine travels in the previously set cruise level.
SET (Set) (2): The machine travels in the cruise level applicable to the current speed.

When the following conditions are met, the mode can be changed to the auto-cruise mode when RES (Resume) (1) or SET (Set) (2) is pressed.

- The engine is running.
- Deceleration is set to OFF.
- Throttle of travel pedal is 5% or above.
- Travel speed is more than 0.

### Canceling auto-cruise mode

This mode can be canceled by one the operations below.

- Press the parking brake switch.
- Pull up the lever lock. (Set it to the lock position.)
- Depress the brake pedal.
- Change the travel direction (forward or reverse).
- Press and hold RES (Resume) (1) or SET (Set) (2).
- Operate the travel pedal.

**Note:** The operation in the auto-cruise mode is limited according to the gear shift setting.

- The machine can travel forward and reverse in the digging mode (low-speed travel 1, high-speed travel 1).
- The machine can travel forward only in the travel mode (low-speed travel 2, high-speed travel 2).

You can change the cruise level while the machine stops or during the auto-cruise mode with the left operating lever.
Refer to “Cruise control lever (if equipped)” on page 2-71.

## HAZARD SWITCH



The hazard lamp turns on when this switch is pressed.
The turn signal indication lamp turns on at the same time.

**Note:** This switch can be operated even when the power is turned off.

## PARKING BRAKE SWITCH



Press this switch to engage the parking brake.
To disengage the parking brake, press this switch when the safety lock lever is fully lowered to the unlocked position during the period that the engine is running.

**IMPORTANT: Do not activate the parking brake while digging. Doing so could damage the brake disk due to the excessive load acting on it. Lock the brake pedal by depressing it down.**

**Note:** The parking brake is automatically activated when the power is turned off.

## ATTACHMENT LOCK BUTTON

**⚠ WARNING**

**When traveling on a road, be sure to lock the working equipment. If any of the controls is accidentally touched when it is unlocked, the machine may suddenly move and cause serious injury or death.**



This button is used when traveling on a road. Pressing this button will light the button lamp indicating that the operations of the hoe attachment, slewing, auxiliary circuit and blade (outriggers) are locked. Pressing this button once again turns off the lamp and releases the lock.

## TRAVEL PEDAL BUTTON (FOOT ACCELERATOR MODE)



The mode switches between the foot accelerator mode and throttle controller mode when this button is pressed.
The control method of the engine speed changes according to the mode.
Foot accelerator mode: The engine speed changes according to the travel pedal operation.
Throttle controller mode: The engine speed changes according to the throttle controller.

## STARTER SWITCH

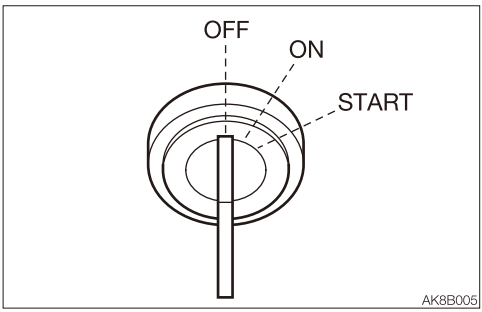


**IMPORTANT: Do not repeatedly switch the key from OFF to ON and ON to OFF over a short period. Doing so will cause engine breakdown.**

OFF ..... Position for stopping the engine and inserting or removing the key.
ON ..... Position in which the engine is running. At this position, all the electrical equipment is functional. When the coolant temperature is too low, the engine is automatically preheated.
START ..... Position for starting the engine. When the key is released, the switch automatically returns to the ON position.

## ENGINE SHUTDOWN SWITCH

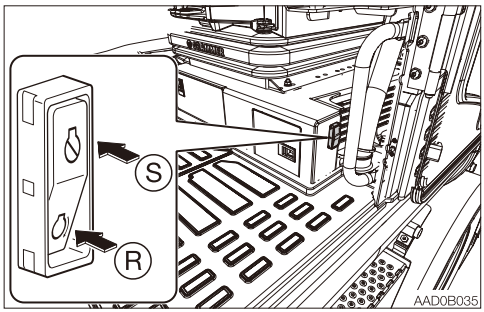


This switch is used to shutdown the engine if it fails to stop, due to machine failure or breakage, when the starter switch is set to the OFF position.

1. Press the stop symbol side (S) of the switch.
   The engine stops.
2. After use, press the turn symbol side (R) to reset the switch.

## THROTTLE CONTROLLER

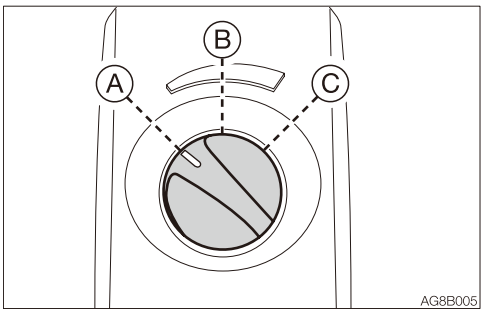


This controls the engine speed.
(A).....Low idling
(B) .....Medium speed
(C) .....Maximum speed

## HORN BUTTON

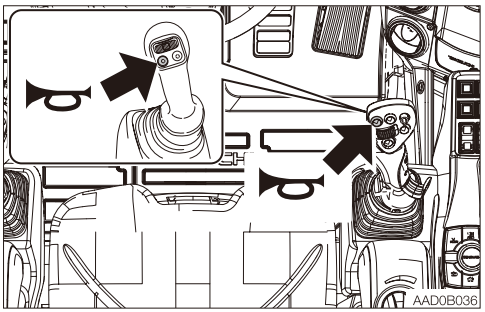


Press the button situated on the right operating lever to blow the horn.

## DECELERATION BUTTON

**⚠ WARNING**

**Before operating the deceleration button, set the operating lever to the neutral position and take your foot off the pedals. If the deceleration button is pressed while driving, the machine's operating speed will abruptly change to result in a dangerous situation.**

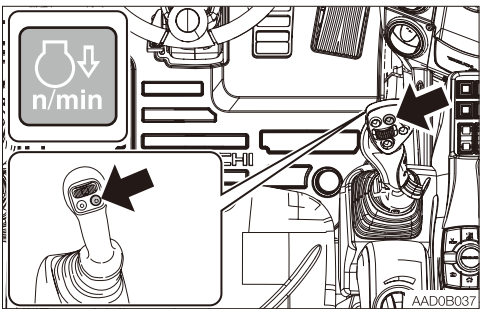


Press this button on the right operating lever to lower the engine speed to low idling. Press the button again to return to the engine speed set with the throttle controller. For safety reasons, it is designed that the deceleration function is activated to set the engine revolutions to low idling whenever the engine is started.
Cancel the deceleration mode by pressing the deceleration button as necessary.

**Note:** This deceleration button is capable of decreasing the engine speed and reducing the fuel consumption, with a simple operation, in a situation such as when little engine output is required and thus the operating or the travel pedal are in neutral.

## TRAVEL SELECT BUTTON/LEVER

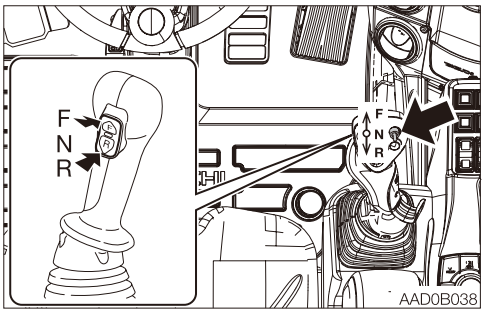


Use this button to change the travel direction.
Step on the brake pedal when the machine is stopped, and then shift the gear.
F..... Forward
N..... Neutral
R..... Reverse (reverse light is lit)
For actual operation, step on the travel pedal for traveling.

## CRUISE CONTROL LEVER (IF EQUIPPED)

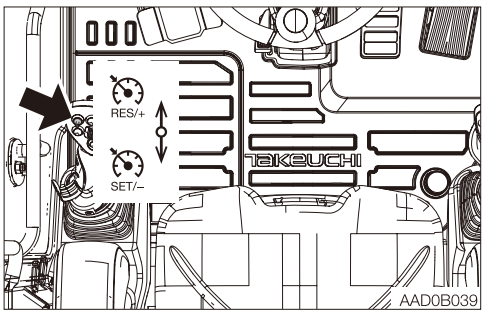


You can change the cruise level while the machine stops or during the auto-cruise mode with the left operating lever.
Refer to “Cruise control switch” on page 2-67.

## BOOM SUSPENSION SWITCH (IF EQUIPPED)

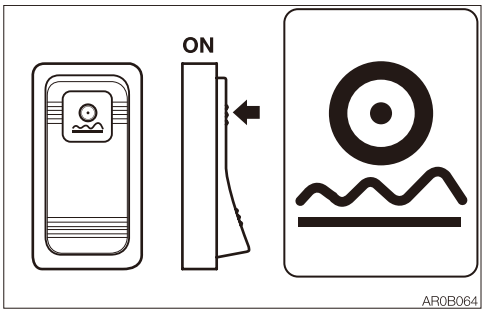


Pressing the symbol side of the boom suspension switch until the buzzer sounds activates the boom suspension function.
When the function is activated, the boom suspension pilot lamp on the display lights up.
When the boom suspension function is activated, pressing the symbol side of the boom suspension switch disables the boom suspension function and the boom suspension pilot lamp on the display turns off.
Refer to “63. Boom suspension pilot lamp (If equipped)” on page 2-36.

**Note:** If the boom suspension switch is pressed and held after the buzzer sounds, the system recognizes this as a malfunction and the boom suspension function will not be activated.

## BOOM SUSPENSION

The boom suspension function reduces the boom vibration and improves the ride stability during travel.

## AUXILIARY 1ST SWITCHES

### Auxiliary hydraulic buttons

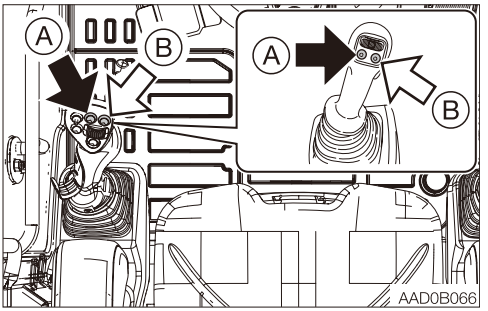


Press those buttons to control the flow of the oil in the first auxiliary hydraulic lines.

- Proportional control of the auxiliary hydraulic circuit is not possible.

(A).....Hydraulic oil flows to the left auxiliary line (a).

(B) .....Hydraulic oil flows to the right auxiliary line (b).

### Slider switch (Proportional control)

Proportional control allows for slow-to-fast/ fast-to-slow movement of attachment. Example: If you move the slider switch half way, the attachment will move at approximately one-half the speed.

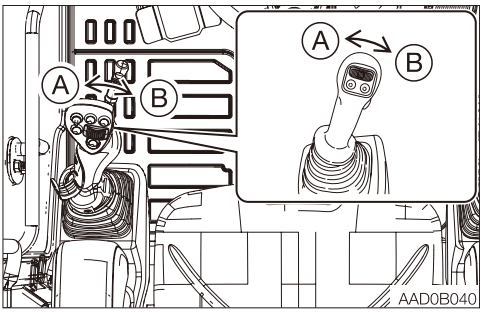


Move this switch to control the flow of the oil in the first auxiliary hydraulic lines.

(A).....Hydraulic oil flows to the left auxiliary line (a).

(B) .....Hydraulic oil flows to the right auxiliary line (b).

Refer to “Auxiliary hydraulic lines (If equipped)” on pages 2-114 to 2-119.

## AUXILIARY 2ND/4TH SWITCH (IF EQUIPPED)

**Slider switch**
**(Proportional control)**
Proportional control allows for slow-to-fast/ fast-to-slow movement of attachment.
Example: If you move the slider switch half way, the attachment will move at approximately one-half the speed.

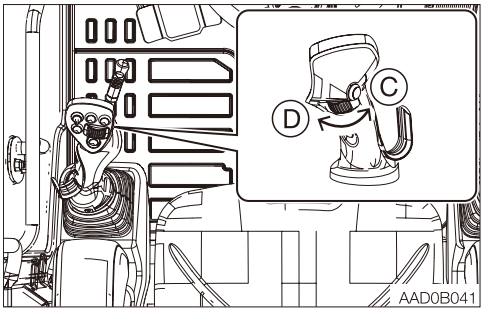


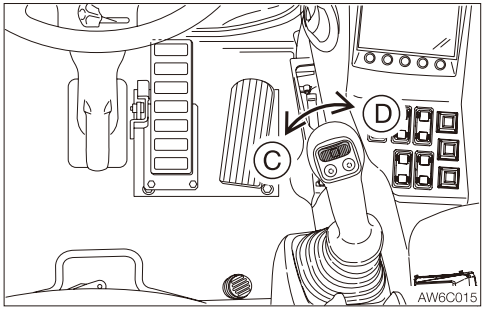


Move this switch to control the flow of the oil in the second auxiliary hydraulic lines.
(C): .....Hydraulic oil flows to the left auxiliary line (c).
(D): .....Hydraulic oil flows to the right auxiliary line (d).

**<For standard lever>**

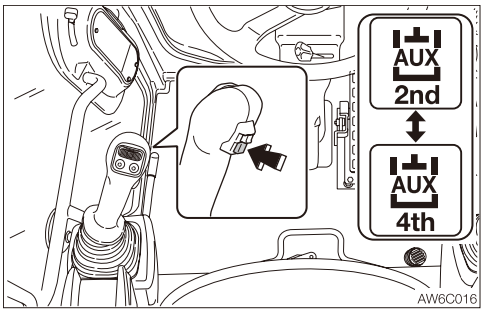


To use the auxiliary 4th hydraulic line, press the auxiliary 2/4 select button to change to the operation of the auxiliary 4th.
Refer to “Auxiliary hydraulic lines (If equipped)” on pages 2-114 to 2-119.

**<For Service Port 4 (Independent) with MultiFunctional Grips>**

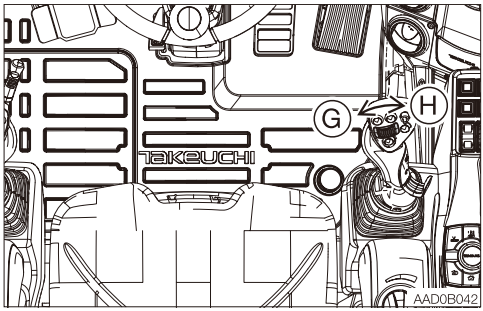


Move this switch to control the flow of the oil in the 4th auxiliary hydraulic lines.
(G): .....Hydraulic oil flows to the left auxiliary line (g).
(H): .....Hydraulic oil flows to the right auxiliary line (h).

## OUTRIGGER SWITCHES (IF EQUIPPED)

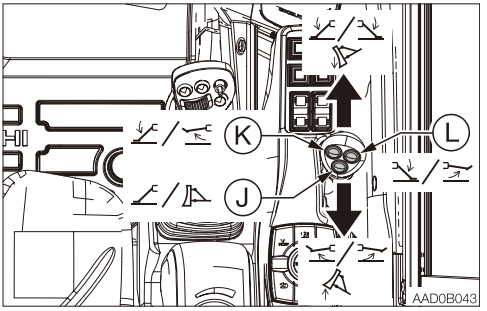


J.....Blade/outrigger select operation
K .....Left outrigger operation
L.....Right outrigger operation

The outrigger operation is performed with the blade /outrigger lever.
Move the lever without pressing the button in the outrigger mode to move the right and left outrigger at the same time.

## JOYSTICK STEERING SWITCH (IF EQUIPPED)

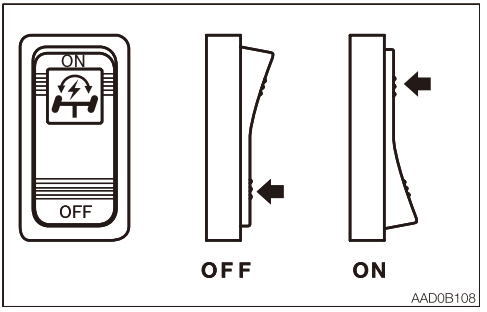


When the joystick steering switch is turned on in the conditions below, the joystick steering function is enabled, and the multi-information display indicator lamp changes to green.
- Engine is running
- Safety lock lever is in the unlock position
- Gear 1

Refer to “Joystick steering” on page 8-39.

## AUTO DIGGING BRAKE SWITCH (IF EQUIPPED)

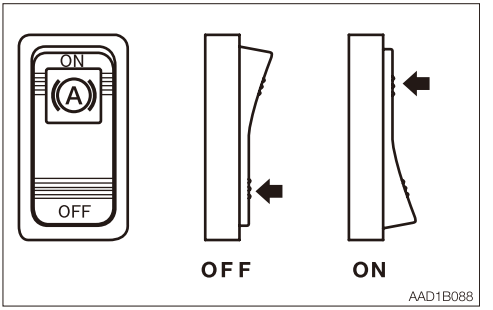


Pressing ON side of this switch activates the auto digging brake function, and the auto digging brake indicator lamp lights up.

### Auto digging brake

The auto digging brake function applies the brake automatically when the travel pedal is released, and releases the brake when the travel pedal is depressed.
With this function, no brake pedal operation is required when changing the travel and digging operations. Accordingly, the working efficiency is improved.

**Note:** When the auto digging brake is activated, the brake lamp lights up even if the brake pedal is not depressed.
**Note:** If the machine stops by the auto digging brake during the auto ram lock mode, the ram lock is activated automatically. Also, the ram lock is released automatically when the travel pedal is depressed in this state.
**Note:** Even if the auto digging brake function is set to ON, the auto digging brake function is automatically disabled during the auto-cruise mode.

## THIRD AUXILIARY HYDRAULIC SWITCH AND BUTTON (IF EQUIPPED)

Refer to “Third auxiliary hydraulic switch and button (If equipped)” on page 2-118.

## AUXILIARY 2/4 SELECT BUTTON (IF EQUIPPED)

Refer to “Auxiliary 2/4 select button (If equipped)” on page 2-119.

## RAM LOCK SWITCH

**⚠ WARNING**

**Do not lock the suspension while traveling. Doing so may create a dangerous situation. Be sure to lock the suspension only when working with the machine.**

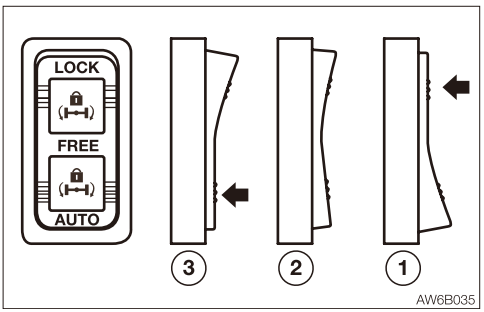


Lock the suspension of the front axle (wobbling) with this switch to prevent the cylinder from moving.

LOCK .... Locks the suspension of the front axle.
Push the LOCK side of the switch to secure the machine when working.

FREE..... Unlocks the suspension. Keep the switch in this neutral position while traveling (High-speed travel: Low-speed travel switch is off).

AUTO .... The suspension is automatically locked if the brake is pressed, and it is unlocked if the brake is released.

## STANDSTILL REGENERATION/STOP SWITCH

**⚠ WARNING**

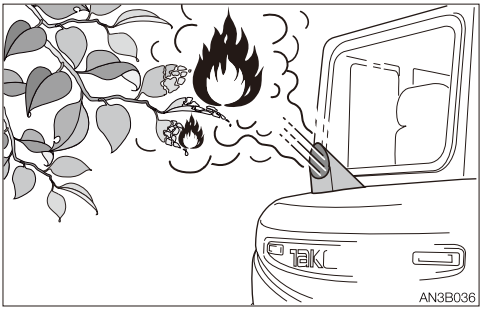


- The exhaust gas emitted from the exhaust line is very hot while the engine is running or the regeneration is in process. Be careful not to accidentally touch it. Doing so could cause burns.
- Do not perform the standstill regeneration if the machine is surrounded by flammable items such as plants, trees, dry grass, wastepaper, oil and waste tires. There is a risk of fire due to high-temperature exhaust gas emitted.
- Do not perform the DPF regeneration in poorly-ventilated indoor spaces, as smoke could be generated during the DPF regeneration or carbon monoxide poisoning could result.
- Do not run the standstill regeneration when the engine hood is open. There is a risk of fire in the machine due to high-temperature exhaust gas emitted.

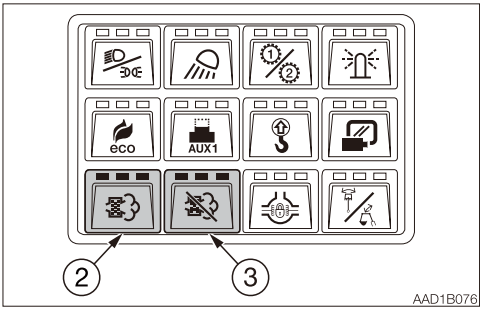


IMPORTANT: When the Standstill regeneration in process/demand indicator lamp starts flashing and the alarm starts sounding, perform the standstill regeneration. If the machine continues to operate without performing the standstill regeneration, the engine output is limited. The ECM error warning indicator lamp also flashes to indicate that the engine needs to be repaired. A number appears on the engine error code screen. Refer to the “Engine error code list” and contact a Takeuchi sales or service dealer for repair.

The time interval between the two regeneration requests is shortened in proportion to the number of regenerations performed.
Very short intervals between the two requests for standstill regeneration can be an indication of a defect. In this case, ask your sales or service dealer for help.

- **Performing the standstill regeneration**
  When the Standstill regeneration in process/demand indicator lamp starts flashing on the multi-information display and the alarm starts sounding, perform the standstill regeneration as follows.
  1. Park the machine in a safe place where there is no fire hazard.
  2. Raise the safety lock lever to the lock position.
     · Do not lower the safety lock lever and move the control levers during regeneration. Doing so interrupts the regeneration.
  3. Decrease the engine speed to low idling.
  4. Press the Standstill regeneration switch (1).
  5. The Standstill regeneration in process/demand indicator lamp changes from flashing to solid, indicating that the engine RPM is automatically increased and the standstill regeneration is started.
  6. Release the switch. Do not leave the machine during regeneration.
     It takes approximately 35 to 40 minutes to complete the regeneration.
  7. The regeneration symbol goes off to indicate the end of regeneration.

**Notes:**
· Do not lower the safety lock lever and move the control levers during regeneration. Doing so interrupts the regeneration.
· The standstill regeneration does not start unless the coolant temperature reaches at least 75°C (167°F).
· Every standstill regeneration slightly dilutes the engine oil with fuel. The number of standstill regenerations is therefore monitored.

- **Stopping the standstill regeneration**
  Press the Standstill regeneration stop switch (2) to stop the standstill regeneration.
  The stop symbol appears on the display. In this case, regeneration must be performed again. Start the standstill regeneration procedure again from the step (1) above, as soon as possible. Do not press the Standstill regeneration stop switch (2) unless there is a risk of fire.
  Refer to “31. DPF auto regeneration/ Standstill regeneration stop indicator lamp/ Low coolant temperature indicator lamp” on page 2-30.

## HEADLIGHTS/POSITION LIGHT SWITCH

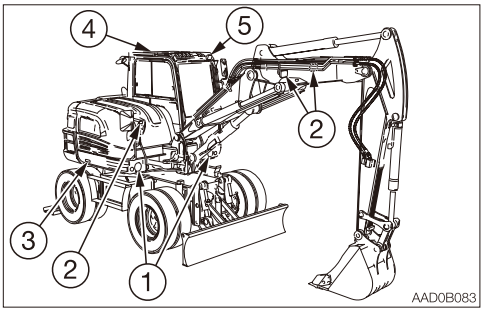


1.Headlights
2.Working lights
3.Side lights
4.Cab rear light
5.Cab front light

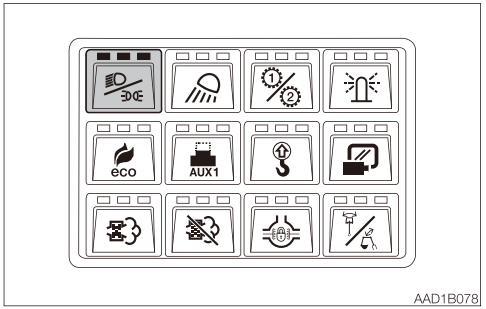


When this switch is turned while the starter switch is at ON, the lights turn on as follows:

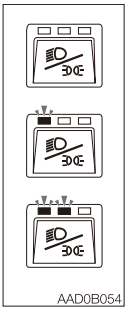


..... Off

..... Position lights turn on.

..... Headlights turn on.

Pressing this button switches the headlights and position lights.
Press and hold the switch while it is lit to turn them off.

## LIGHT SWITCH

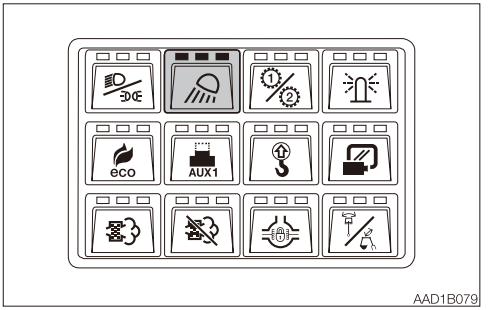


When this switch is turned while the starter switch is at ON, the lights turn on as follows:

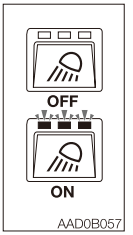


..... Off

..... Working light, switch lamps, front light, side lights will be lit. (switch lamp is lit)

Pressing this switch changes the on or off state of the lamps/lights.

## GEAR SHIFT SWITCH

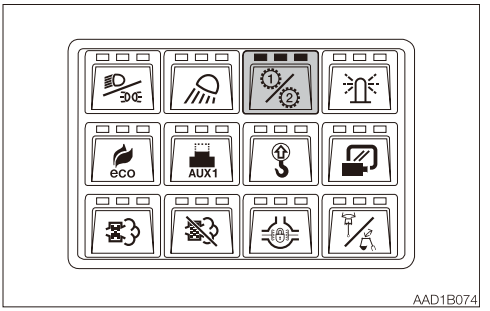


Refer to “4-speed travel switches” on page 2-66.

## BEACON LAMP SWITCH

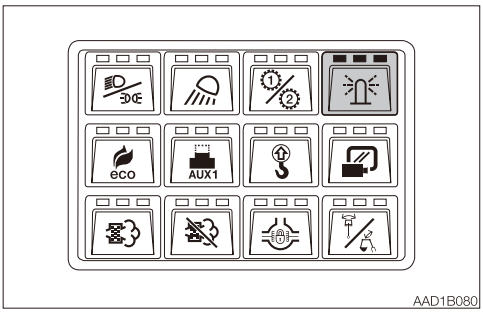


When this switch is turned on while the starter switch is at ON, the lamp turns on as follows:

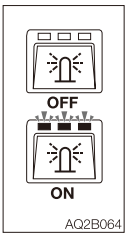


..... Off

..... Beacon lamp is lit

Pressing this switch changes the on or off state of the lamps/lights.

## ECO MODE SWITCH

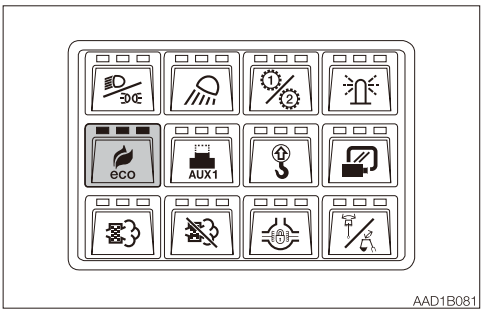


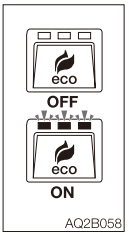


..... **STD mode**

..... **ECO mode**
Pressing this switch turns on the ECO mode indicator lamp on the multi-information display. The engine RPM and hydraulic horse power are set to economically optimal values to improve the fuel economy.
Refer to “42. ECO mode indicator lamp” on page 2-33.

Pressing this switch changes the on or off state of the lamps/lights.

## DETENT MODE SWITCH (AUXILIARY 1ST)

**IMPORTANT: Do not operate the machine in the detent mode for a long time. Doing so will increase the hydraulic oil temperature and shorten the service life of the hydraulic units.**

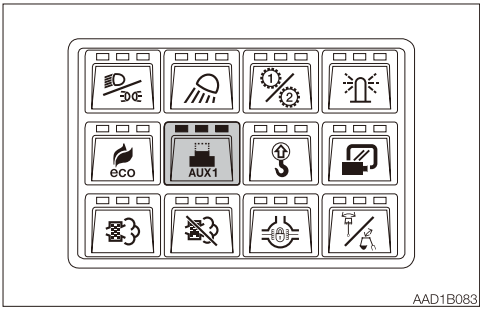


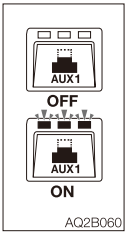


..... Momentary mode

..... Detent mode

Pressing this switch changes the on or off state of the lamps/lights.

## LIFT OVERLOAD WARNING SWITCH

**⚠ WARNING**

**If the overload is not removed after the overload warning horn is sounded, the machine may tip over or the emergency shut-off valve may be activated. If the horn starts sounding, stop operating the machine and lighten the load.**

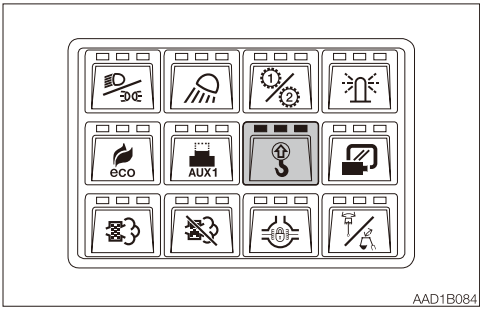


If a weight greater than the lifting capacity is applied or lifted, the overload warning device is activated and the horn sounds. (When the lift overload warning switch is turned on.)

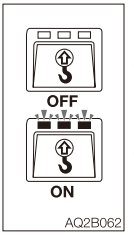


..... Off

..... On (lit): Normal
(flashing): Abnormal

Pressing this switch changes the on or off state of the lamps/lights.

## CAMERA IMAGE SWITCH

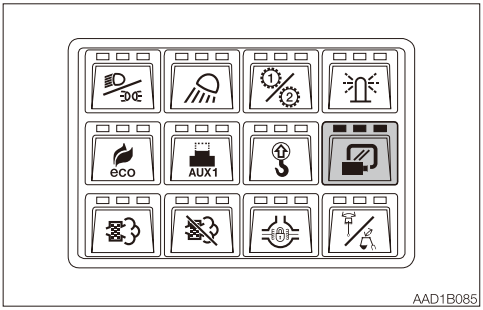


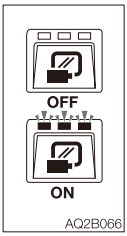


..... Off

..... The images taken by the camera appear on the display.

Pressing this switch changes the on or off state of the lamps/lights.

**Note:** The camera image switch functions only on the machine equipped with a camera.

## DIFF-LOCK SWITCH (IF EQUIPPED)

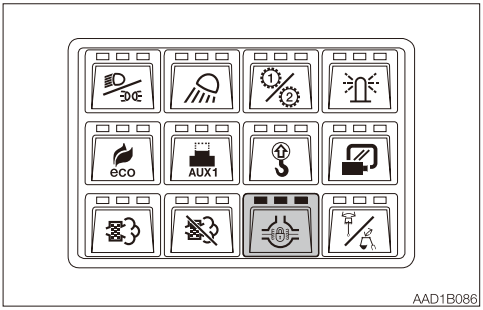


Pressing this switch while the starter switch is turned on will temporarily lock the differential gear, increasing the control capability of the machine over bad roads.

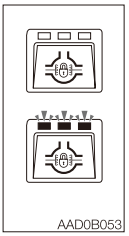


..... Unlocked.

..... Locked

This switch is enabled only in the low-speed travel 1 at 5 km/h maximum.
This function helps prevent the machine from getting bogged down in the mud or soft ground, or stuck in the rocky area.

## SWING /SECOND BOOM SELECT SWITCH

**⚠ WARNING**

**It is dangerous to turn on this switch while the boom swing /second boom pedal is depressed, as the attachment may move unexpectedly. Always set the boom swing /second boom pedal back to the neutral position before operating this select switch.**

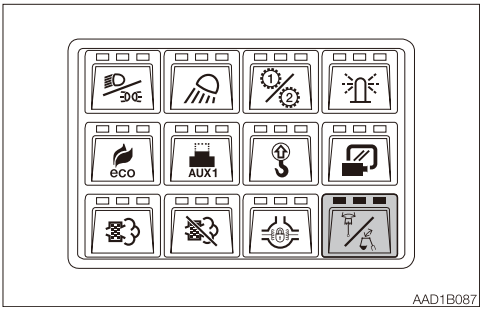

AAD1B087

This switch is used to select either the boom swing operation or the second boom operation.

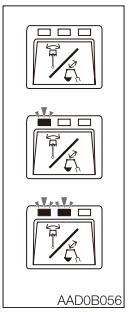
AAD0B056

..... off (Mono boom specification only)

..... Swing mode

..... Second boom mode

Pressing this button switches the swing and second boom.
The actual boom swing /second boom operation is performed with the boom swing pedal.
Refer to “Boom swing/Second boom pedal” on page 2-89.
**Note:** The function does not operate for machines with mono boom specifications.

## REFILL SWITCH

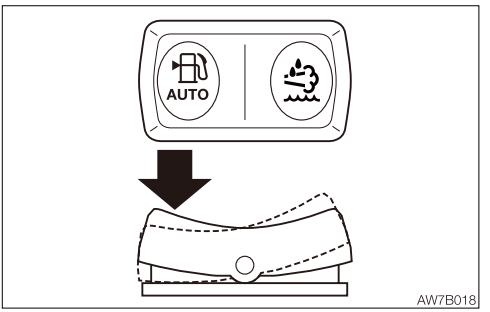

AW7B018

AUTO ..... Press this switch when the fuel supply pump is used. Refer to “Fuel Supply Pump” on page 2-127.

..... Press this switch when the DEF/AdBlue® solution is added. Refer to “Checking the DEF/AdBlue® level and refilling” on page 5-31.

## 2WS/4WS SELECT SWITCH (IF EQUIPPED)

**⚠ WARNING**

- **Check the selected mode before traveling. The machine could be moved unexpectedly and possibly resulting in an accident.**
- **In the 4WS mode, the machine turns sharply with less turning radius difference compared with the 2WS mode, however, the rear end of the machine extrudes to the outside. Be careful not to hit the person or objects around.**
- **When traveling in the 2WS mode, make sure that the 2WS mode rear wheels out of neutral range indicator lamp is off. If the indicator lamp is lit during traveling, the machine could be moved unexpectedly and possibly resulting in an accident.**

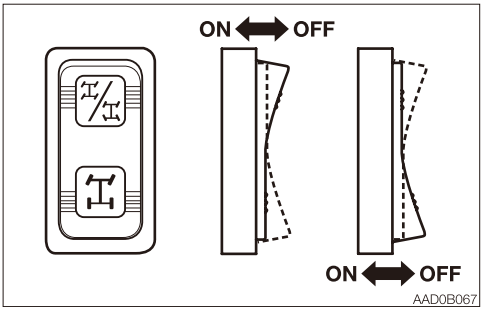


Use this switch to change the mode from the 2WS mode to the 4WS or 4WS-C mode. Also, use this switch to change the mode from 4WS or 4WS-C mode to 2WS mode. The switching operation is available only in the digging mode (Low-speed travel 1 or High-speed travel 1).

- Switching from 2WS mode to 4WS or 4WS-C mode

1. Operate the steering to set the front wheels to the neutral position.
2. Press the 4WS/4WS-C symbol side (1) of the switch to change the mode to the 4WS mode.
   (When changing the mode to the 4WS-C mode, press and hold the 4WS/4WS-C symbol side (1) for 1.5 seconds or more.)
3. The switching operation is completed when the 4WS or 4WS-C mode on the 2WS/4WS indicator lamp is lit.

**Note:** If the front wheels are not set to the neutral position, the front wheel steering indicator on the steering indicator lamp lights up and the buzzer sounds. Also, the 2WS mode on the 2WS/4WS indicator lamp flashes.
Operate the steering to set the front wheels to the neutral position.

- Switching from 4WS or 4WS-C mode to 2WS mode

1. Operate the steering to set the rear wheels to the neutral position.
2. Press the 2WS symbol side (2) of the switch to change the mode to the 2WS mode.
3. The switching operation is completed when the 2WS mode on the 2WS/4WS indicator lamp is lit.

**Note:** If the rear wheels are not set to the neutral position, the rear wheel steering indicator on the steering indicator lamp lights up and the buzzer sounds. Also, the 4WS or 4WS-C mode on the 2WS/4WS indicator lamp flashes.
Operate the steering with the speed of 1 turn in 5 seconds (0.2rev/sec) to set the rear wheels to the neutral position.

# LEVERS AND PEDALS

## SAFETY LOCK LEVER

**⚠ WARNING**

- **Before standing up from the operator's seat to open/close the window or remove/install the lower window, lower the working equipment to the ground, raise the safety lock lever to engage the lock and stop the engine. If any controls should be accidentally touched when the safety lock lever is lowered (unlocked), the machine will suddenly move and cause serious injury or death.**
- **Be careful not to touch the operating levers when raising or lowering the safety lock lever.**
- **Before leaving the operator's seat, lower the working equipment to the ground, set the locking devices to the lock position, and then stop the engine. Also, be sure to remove the key, lock the cab and covers, take the key with you and store it in a specified place.**

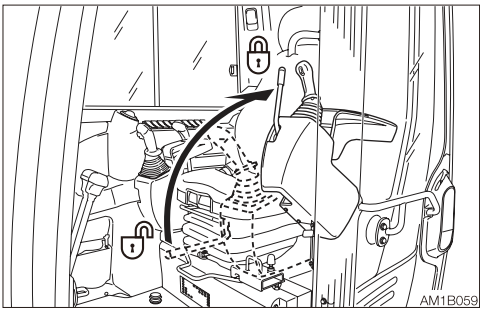


This device is for locking the operations of hoe attachment, slewing, auxiliary hydraulic circuits, dozer blade (outriggers) and traveling. When the lever is raised, the lever stand springs up to lock the lever.

**Safety start function**
When the lever is in the unlock position, the engine cannot be started.

## SLEW LOCK PIN

**⚠ WARNING**

**When transporting or traveling on a road, be sure to lock slewing with the lock pin. Otherwise, the upperstructure could slew and cause a serious accident if a sudden load is applied to the upperstructure at times such as when turning.**

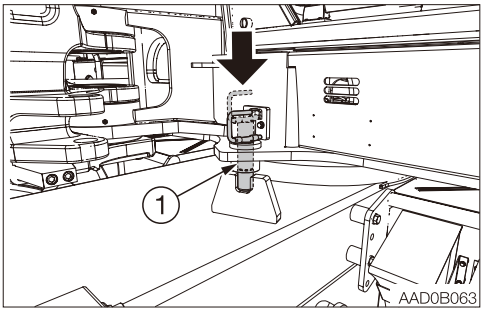


To lock the upperstructure for transport and on-road driving, use the lock pin as follows:

1. Align the upperstructure in parallel with the undercarriage.
2. Lower the pin (1) fully into the lock.

**IMPORTANT: The machine could be damaged if slewing is attempted by excessive force while the upperstructure is locked.**
**Check the position of the slew lock pin before slewing.**

## STEERING WHEEL

**⚠ WARNING**

- **Check the position of the undercarriage (steering device) before traveling. Before operating the travel pedal, make sure that the steering device is to the front of the operator's seat. Remember that when the steering device is to the rear of the operator's seat, the steering wheel must be operated in the reverse direction from when it is to the front.**
- **Keep in mind that the steering wheel operation is not possible when the engine is stopped or if the steering pump becomes faulty.**

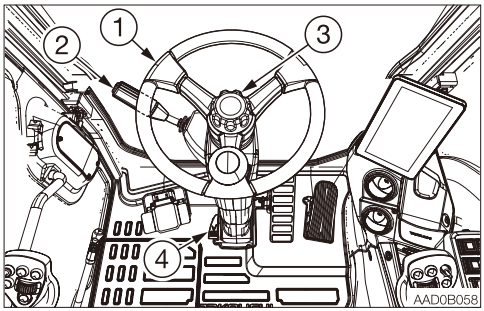


The steering device contains the steering wheel (1) and the turn signal lever (2) for driving.
Change direction by carefully turning the wheel. The additional steering knob makes the steering wheel movement easier.
The steering wheel operation is available only when the engine is running or the steering pump is properly working.

**Emergency steering function**
The steering is possible even if the engine is stopped. However, the steering wheel must be turned more to get the same steering angle as the standard one.

**Adjusting the position of the steering wheel**

**⚠ WARNING**

- **Adjust the position of the steering wheel before driving the machine. If you adjust it while driving the machine, steering will become unstable, possibly resulting in an accident.**
- **After adjusting, check that the steering wheel is securely fixed in place. Unsecured steering wheel is dangerous, as it could be moved unexpectedly.**

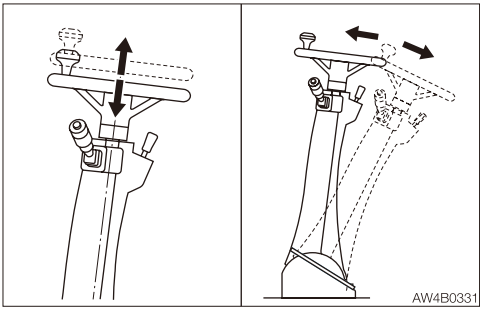


The position of the steering wheel can be adjusted in up/down and front/back directions.

**Up/Down**
1. Turn the cap (3) counterclockwise and pull up or push down the wheel.
2. Tighten the cap (3).

**Forward/backward**
1. Depress the pedal (4) and tilt the handle forward or backward.
2. Release the pedal (4) at the desired angle.

## TURN SIGNAL LEVER

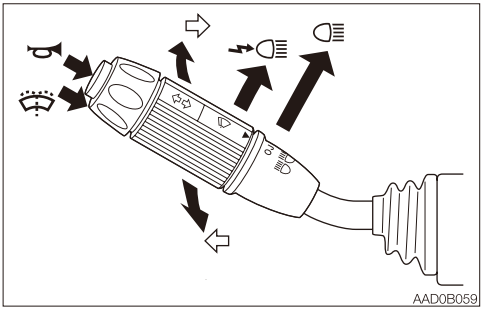


Use this lever to operate the turn signal lights, headlights, wiper and horn.

⇦.....Left turn lights
⇨.....Right turn lights
⇝≣.....Flash passing
≣ Neutral: ....Low beam
≣.....High beam
Push.....Washer
Push .....Horn

**Note:** The above (⇦), (⇨) and (⇝≣) can be operated even when the power is turned off.

**Wiper operation**
O.....Off
J.....INT (intermittence)
I.....On

## BRAKE PEDAL

**⚠ WARNING**

- **When parking, depress the braking pedal all the way down to engage the pedal lock so that the machine cannot start while parked.**
- **Release the brake pedal lock before start traveling.**

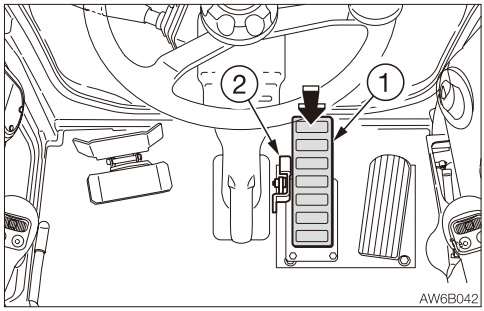


**IMPORTANT: Be sure to lock the brake pedal when using the bucket.**

The brake pedal (1) is used to activate a brake (arrow indicates the depression).
The pedal (1) can be locked by fully depressing it. Press on the Release lever (2) to release the lock.
Locking the brake pedal will cause the machine to enter the digging mode.

## TRAVEL PEDAL

**⚠ WARNING**

- **Check the position of the undercarriage (steering device) before traveling. Before operating the travel pedal, make sure that the steering device is to the front of the operator's seat. Remember that when the steering device is to the rear of the operator's seat, the steering wheel must be operated in the reverse direction from when it is to the front.**
- **Before traveling in reverse, check that the area in the rear is clear of any person.**

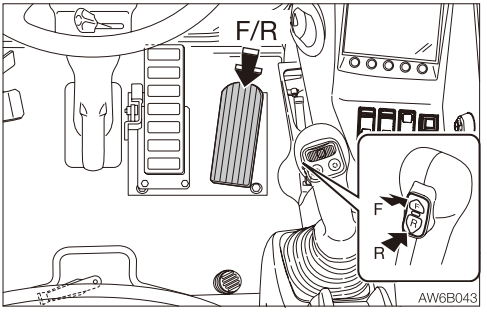


Use this pedal to drive the machine and to control the travel speed.
This pedal can also be used to control the engine RPM if the travel pedal button has been pressed to enter the foot accelerator mode.

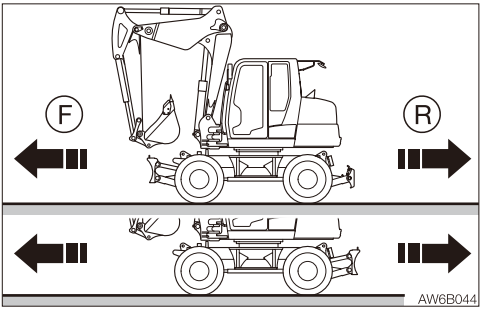


F.....Forward travel
R .....Reverse travel

Use the travel select button to change the travel direction (forward or reverse).
Refer to "Travel select button/lever" on page 2-71.

## BOOM SWING/SECOND BOOM PEDAL

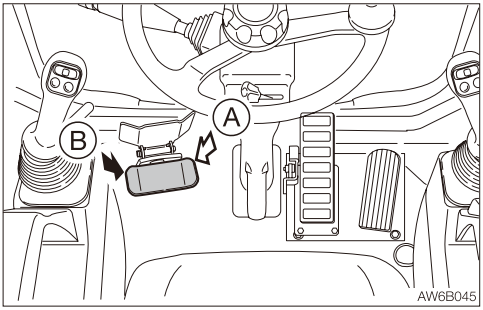


Use this pedal to operate the boom swing or the second boom (if equipped).
(A).....Boom swing right/Second boom lower
(B) .....Boom swing left/Second boom raise
Refer to “Operating the second boom (If equipped)” on page 3-19.
Refer to “Operating the boom swing” on page 3-19.

## OPERATING LEVERS

**⚠ WARNING**

- **Before starting operation, carefully check which lever pattern you are going to use.**
- **It is described using the ISO pattern in this manual.**

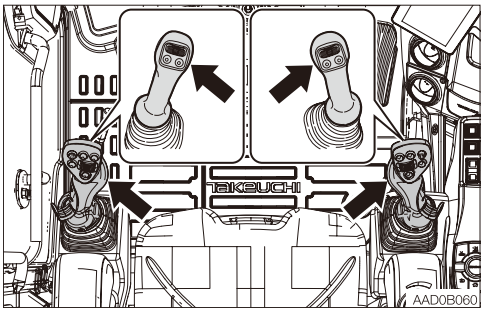


Use these levers to operate the boom, arm, bucket and upperstructure.
Refer to “Lever pattern (ISO pattern)” on pages 3-8 and 3-9.
Refer to “Operating the working equipment” on pages 3-17 and 3-19.

## BLADE LEVER

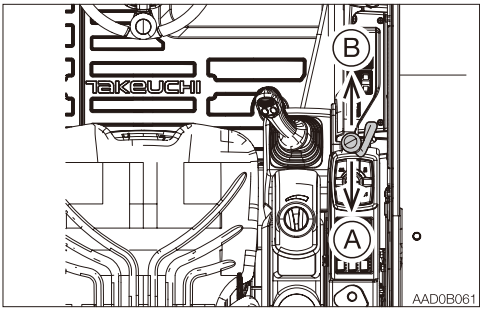


Use this lever to operate the dozer blade.
(A).....Blade up
(B) .....Blade down
Refer to “Operating the dozer blade” on page 3-19.

## BLADE/OUTRIGGER LEVER (IF EQUIPPED)

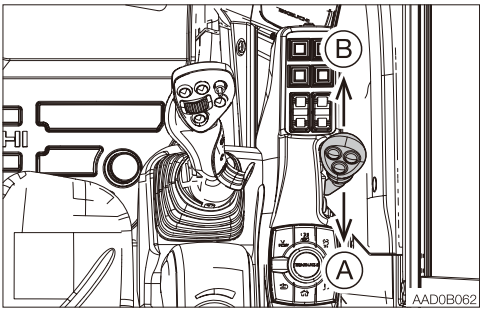


Use this lever to operate the dozer blade or the outrigger (if equipped).
Use the outrigger switch to select the dozer blade or outrigger operation.

(A).....Blade raise/Outriggers raise
(B) .....Blade lower/Outriggers lower

Refer to “Outrigger switches (If equipped)” on page 2-74.
Refer to “Operating the dozer blade” and “Operating the Outrigger (If equipped)” on page 3-19.

# ACCESSORIES

## AIR CONDITIONER

### CAUTIONS ON USE

**Ventilate periodically**

- When using the air conditioner over an extended period of time, open the windows about once each hour to let in fresh air.
- Your eyes may become irritated if you smoke while using the air conditioner. If this happens, open the windows to let in fresh air. Smoking particularly irritates the eyes when the air conditioner is being used. Since the humidity in the cab drops, the cornea becomes dry.
- If the outside air is dirty, set the air conditioner to the circulation mode.

**Always maintain good visibility**

Working with dirty windows or fogged windows restricts visibility and is dangerous. Always clean dirt and moisture off the windows before working.

- The windows tend to get foggy when the humidity is high. If this happens, turn on the air conditioner to use outside air and the defroster to get rid of the fog.
- If the air conditioner temperature is set to the lowest when the defroster is being used, the difference between the external and internal temperatures increases, resulting in frost on the outside of the windows. If this happens, either turn the air conditioner off or adjust the air conditioner to increase the temperature.
- Mist may blow out of the air outlets. This is not a malfunction. When moist air passes through the evaporator on the air conditioner unit, water particles in the air freeze and are emitted as mist.

**Do not overcool**

For health reasons, the air inside the cab should be kept at a temperature at which you feel a little cool when entering the cab from outside (a difference of 5 to 6°C (9 to 11°F)). Remember to adjust the temperature properly.

**Do not turn on the air conditioner until the engine is started**

To avoid placing an excessive load on the compressor, wait until the engine is started and is running smoothly before turning on the air conditioner.

**Let hot air out first**

If the machine has been parked in the sun, open the windows and door to let the hot air out of the cab before using the air conditioner.

**Caution on refrigerant (gas)**

If the refrigerant comes in contact with skin or eyes, it may cause frostbite or eye damage. Never touch the refrigerant or loosen the parts on the cooling circuit.
If the refrigerant gas leaks, keep flames away.

**Off-season inspection**

Even off season, run the air conditioner for 3 to 5 minutes at least once a week to maintain oil in the various parts of the compressor.

**IMPORTANT: Before turning on the air conditioner, make sure that the engine is at low idle if the machine has not been operated for one week or more to protect the compressor.**
**Never turn it on while running at high speed.**
**IMPORTANT: If the machine is in storage for a long time, periodically perform a test run whenever possible.**
**Test run interval: About once a month**
**Test run duration: At least 10 minutes**

## NAMES OF COMPONENTS

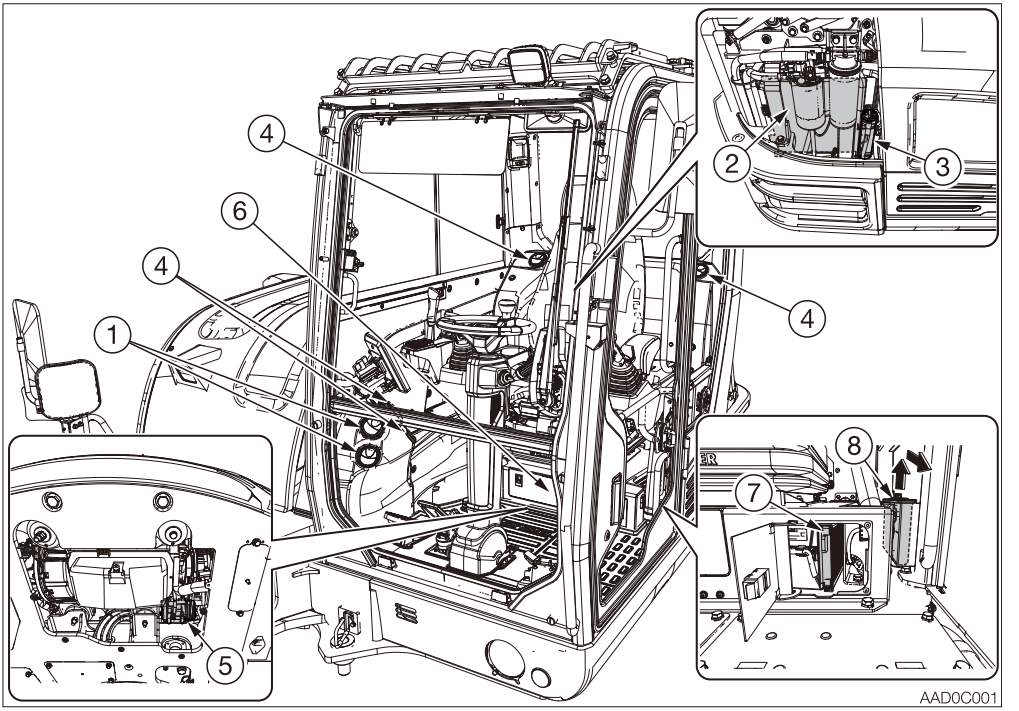


1. Defroster
2. Condenser
3. Receiver dryer
4. Outlets
5. Compressor
6. Air conditioner unit
7. Circulation filter
8. Ventilation filter

## AIR CONDITIONER SCREEN OPERATION

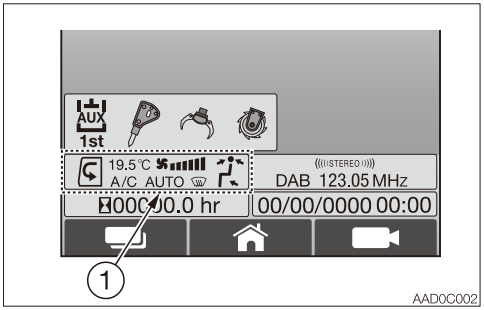


The air conditioner is operated via the display.
When in the Home screen, tap the symbol (1) or press the air conditioner menu switch to go to the air conditioner screen.

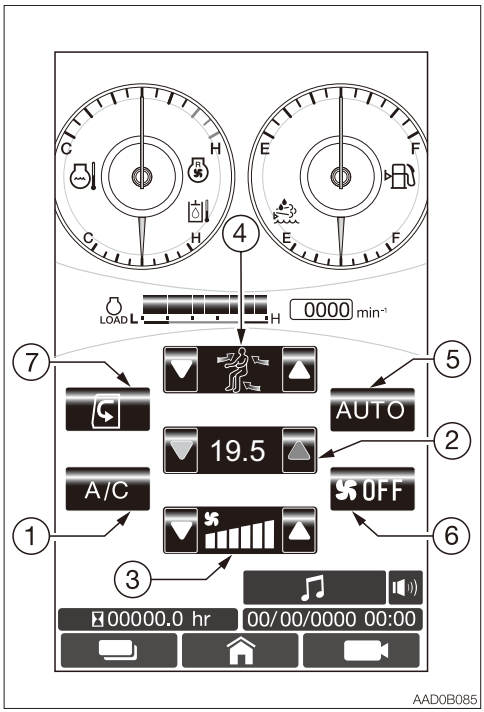


### (1) Air conditioner symbol (A/C)

**IMPORTANT: To avoid placing an excessive load on the compressor, wait until the engine is started and is running smoothly before turning on the air conditioner.**

Use this symbol to turn on or off the cooling/dehumidifying function.

**Touch operation**
Tapping the air conditioner symbol when the engine is operating turns on the symbol, indicating that the cooling/dehumidifying function has been turned on.
To turn off the cooling/dehumidifying function, tap the air conditioner symbol (1) or the air conditioner OFF symbol (6).

**Dial operation**
Selecting the air conditioner symbol (1) and pressing the dial when the engine is operating turns on the symbol, indicating that the cooling/dehumidifying function has been turned on.
To turn off the cooling/dehumidifying function, select the air conditioner symbol (1) and press the dial, or select the air conditioner OFF symbol (6) and press the dial.

Symbol is off:..... OFF
Symbol is on:..... ON

**Note:** To prevent leakage of refrigerant gas from the compressor's seal, operate the air conditioner at least once a week, regardless of the season.
**Note:** The air conditioner will not function if the temperature in the cab is low (3°C (38°F) or lower).

**(2) Increase/Decrease setting temperature**
Increments the set point temperature up or down. The system will control the electronic water valve and/or the A/C compressor clutch to hold the cab temperature as closely as possible to the set point temperature.

**Touch operation**
Tap the down ( ▽ ) or up ( ▲ ) arrow symbol of the temperature setting to increase/ decrease the temperature.

**Dial operation**
Select the temperature setting and press the dial. Move the dial up/down or left/right or turn it to change the temperature, and then press the dial to complete the editing.

**(3) Increase/Decrease fan speed**
Overrides the automatic fan speed control (AUTO) feature. The fan speed can be changed in increments/decrements of 6 steps. The fan speed is changed or maintained until the AUTO symbol is selected.

**Touch operation**
Tap the down ( ▽ ) or up ( △ ) arrow symbol of the fan speed setting to change speed.

**Dial operation**
Select the fan speed setting and press the dial. Move the dial up/down or left/right or turn it to change the fan speed, and then press the dial to complete the editing.

**(4) Outlet option select symbol**
Select the desired outlet option depending on the purpose of use.
- .....Air comes from the front outlet.
- .....Air comes from the front and rear outlets.
- .....Air comes from the front, rear and foot outlets.
- .....Air comes from the defroster and foot outlet.
- .....Air comes from the defroster.

**Touch operation**
Use the down ( ▽ ) or up ( △ ) arrow symbol to select the desired outlet option

**Dial operation**
Select the outlet option select and press the dial. Move the dial up/down or left/right or turn it to select the desired outlet, and then press the dial to complete the editing. Adjust the air direction at each outlet.

**(5) AUTO**
Places the system in a fully automatic temperature control mode including fan speed. The system will adjust the blower fan speed to the lowest setting necessary to maintain the cab temperature at the displayed set point temperature.

**Touch operation**
Tapping the air conditioner AUTO symbol (5) turns on the symbol, indicating that the AUTO mode is enabled. To cancel the AUTO mode, change the fan speed or the outlet option.

**Dial operation**
Select the air conditioner AUTO symbol (5), and then press the dial to turn on the symbol, indicating that the AUTO mode is enabled. To cancel the AUTO mode, change the fan speed or the outlet option.

Symbol is off:..... OFF
Symbol is on:..... ON

**(6) Air conditioner OFF symbol**
Turns off the air conditioner.

**Touch operation**
Tapping the air conditioner OFF symbol (6) turns off the air conditioner.

**Dial operation**
Selecting the air conditioner OFF symbol (6) and pressing the dial turns off the air conditioner.

**(7) Ventilation/Circulation symbol**
Use this symbol to switch between Ventilation and Circulation.

.....Circulation
- Quick cooling or heating of the cab
- When external air is dirty

.....Ventilation
- Lets in fresh air
- Defogs the windows
- Ventilates air-conditioned air

**Touch operation**
Tapping the Ventilation/Circulation symbol (7) toggles between Circulation and Ventilation.

**Dial operation**
Selecting the Ventilation/Circulation symbol (7) and pressing the dial toggles between Circulation and Ventilation.

### Cautions when using the air conditioner

**⚠ CAUTION**

- **When the air conditioner is set to the recirculation mode, the air in the cab gradually becomes dirty, so switch to external air ventilate once a comfortable temperature is reached.**
- **Excessive cooling can be harmful to your health. It is best to keep the air inside the cab only about 5 to 6°C (9 to 12°F) cooler than the outside air.**
- **If the excavator has been parked in the sun, open the windows or door to let the hot air out of the cab before using the air conditioner.**

### Outlets

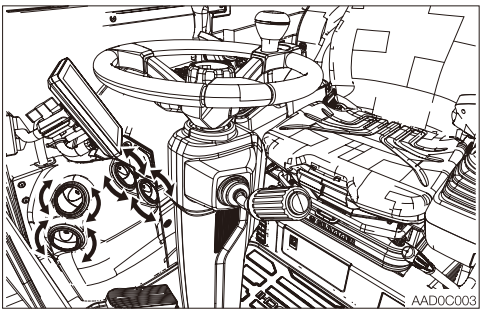


Move the louvers to adjust the air flow direction.

### Filters

Clean the filters immediately after operating in dusty places.
If the filters are clogged, the air flow is reduced and a booming sound is heard from the heater unit.
Refer to “Cleaning the air filters (AC)” on page 5-56.

## CUP HOLDER/SMALL ITEMS STORAGE

**⚠ CAUTION**

- Drinks may be spilled due to vibration when the machine is operating or traveling. Be particularly careful not to burn yourself with hot drinks.
- Note that the electric parts may be damaged if drinks are spilled on them. Be careful not to spill liquids on them.

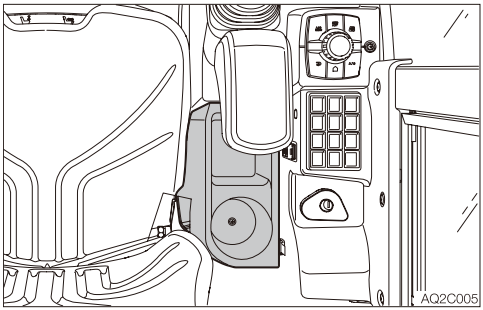


Use this holder to hold cups, bottles or small items.

## SMARTPHONE HOLDER

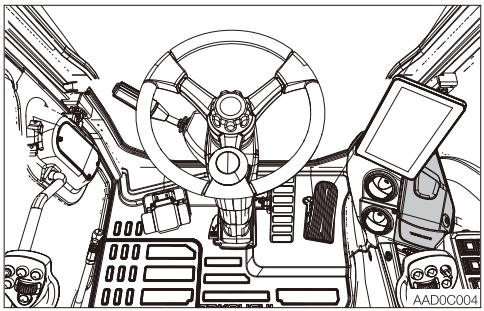


Use this holder to place the Smartphone.

## INTERIOR LIGHT

**IMPORTANT: The battery capacity decreases if the interior light is left on for a long time when the engine is stopped. Turn the lamp off when leaving the machine.**

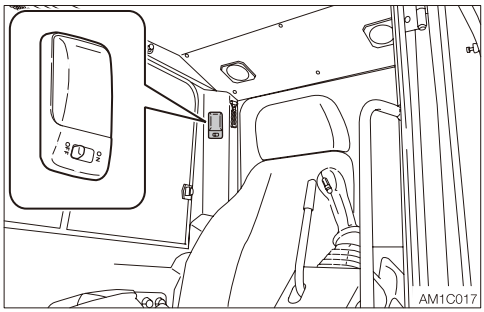


OFF (O).....Lamp is turned off all the time, with no regard for the door being opened or closed.
ON ( I ).....Lamp is turned on all the time, with no regard for the door being opened or closed.

## MIRRORS

**⚠ WARNING**

**Adjust the mirrors before operating the machine.**
**If the visibility is poor, death or serious injury could result.**

The mirror can be adjusted by moving it by hand. If it is too hard to move by hand or too loose, use a tool to adjust it. Set the machine to the travel posture, and then adjust the mirrors by following the instructions in this manual.

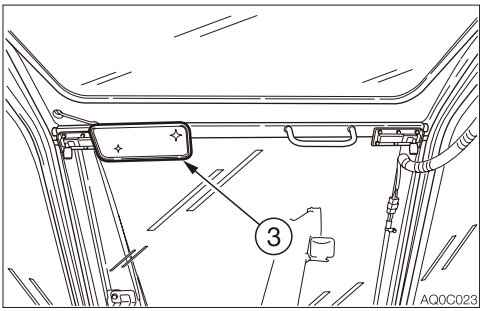


- Adjust the mirror (3) so that you can see the area behind the machine.

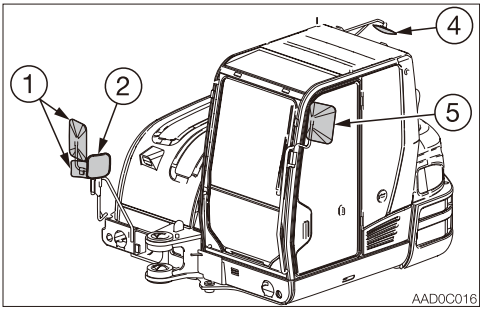


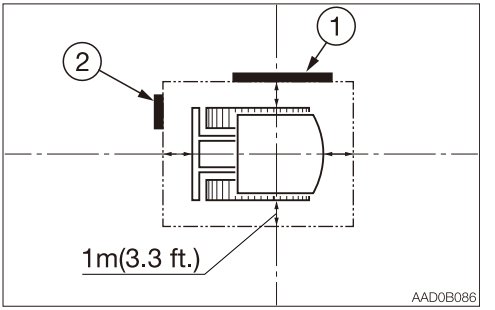


- Adjust the mirror (1) so that you can see the right side portion 1 meter (3.3 ft.) away from the machine, which is obstructed by the machine.
- Adjust the mirror (2) so that you can see the forward right portion 1 meter (3.3 ft.) away from the machine, which is obstructed by the arm and boom.
- Adjust the mirror (4) so that you can see the view behind the crawlers.
- Adjust the mirror (5) so that you can see the area behind the machine.

## REAR VIEW CAMERA (IF EQUIPPED)

**⚠ WARNING**

**Adjust the cameras before operating the machine.**
**If the visibility is poor, death or serious injury could result.**

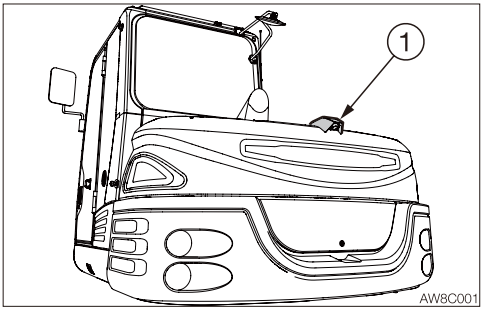


The images being taken by the camera (1) can be shown on the multi information display. While operating the machine, use the camera (1) to check the blind spots from the operator's seat.
Refer to "Camera image" on page 2-64.
If the images are not correctly displayed, adjust the camera installation angle.

### Adjusting the installation angle

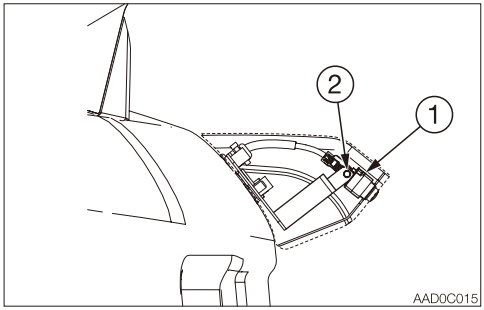


1. Loosen the right and left bolts (2) securing the camera (1).

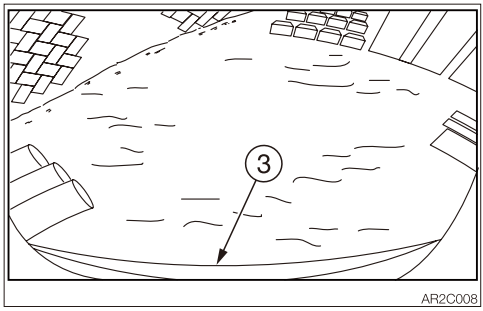


2. Adjust the angle while checking the screen so that the portion (3) of the machine can be displayed.
3. Tighten the right and left bolts (2) evenly.
   · Tightening torque: 0.5 N·m (0.4 ft-lb.)

## 270-DEGREE VIEW CAMERA SYSTEM (IF EQUIPPED)

**⚠ WARNING**

**Adjust the cameras before operating the machine.**
**If the visibility is poor, death or serious injury could result.**
**Calibration is required when the camera(s) is (are) replaced due to failure. Check with your local Takeuchi dealer.**

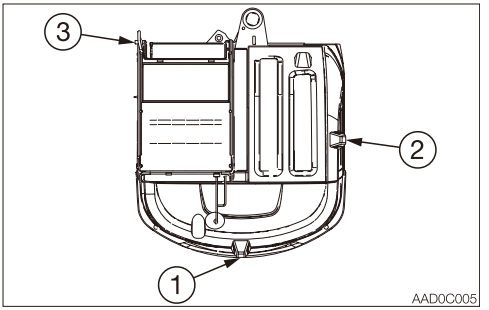


The images being taken by the cameras (1), (2) and (3) can be shown on the multi-information display. While operating the machine, use the cameras (1), (2) and (3) to check the blind spots from the operator's seat.
Refer to "Camera image" on page 2-64.
If the images are not correctly displayed, adjust the camera installation angle.

### Adjusting the installation angle

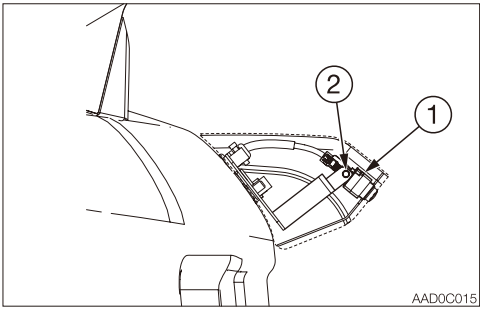


1. Loosen the right and left bolts (2) securing the camera (1).
2. Adjust the angle while checking the screen.
3. Tighten the right and left bolts (2) evenly.
   · Tightening torque: 0.5 N·m (0.4 ft-lb.)

## 24 V EXTERNAL POWER SOCKETS

**⚠ WARNING**

**Use only those electric products which comply with the specifications of these sockets.**

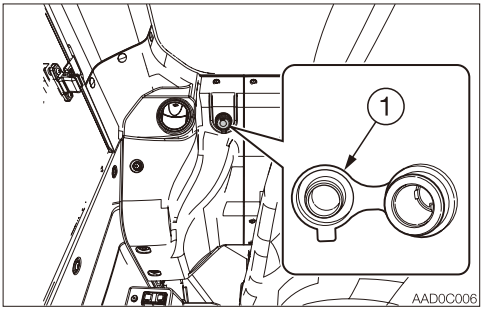


**For beacon**

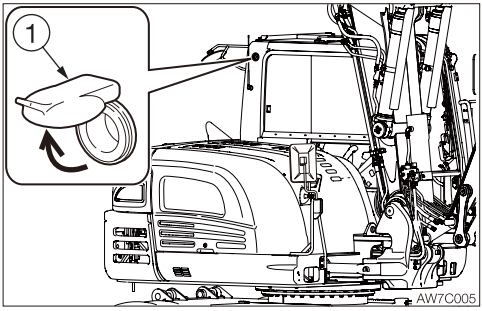


Use these sockets to connect the external power supply. When using, be careful not to exceed 24 V/5 A.
To use, open the cap (1).

## RADIO

CAUTIONS ON USE

- To ensure safe operation of the machine, always be sure to keep the volume of the radio down to a level where you can easily hear sounds from outside the machine.
- Do not use the radio for a long time when the engine is stopped. Doing so will drain the battery and make it difficult or impossible to restart the engine.

OPERATIONS ON THE SCREEN

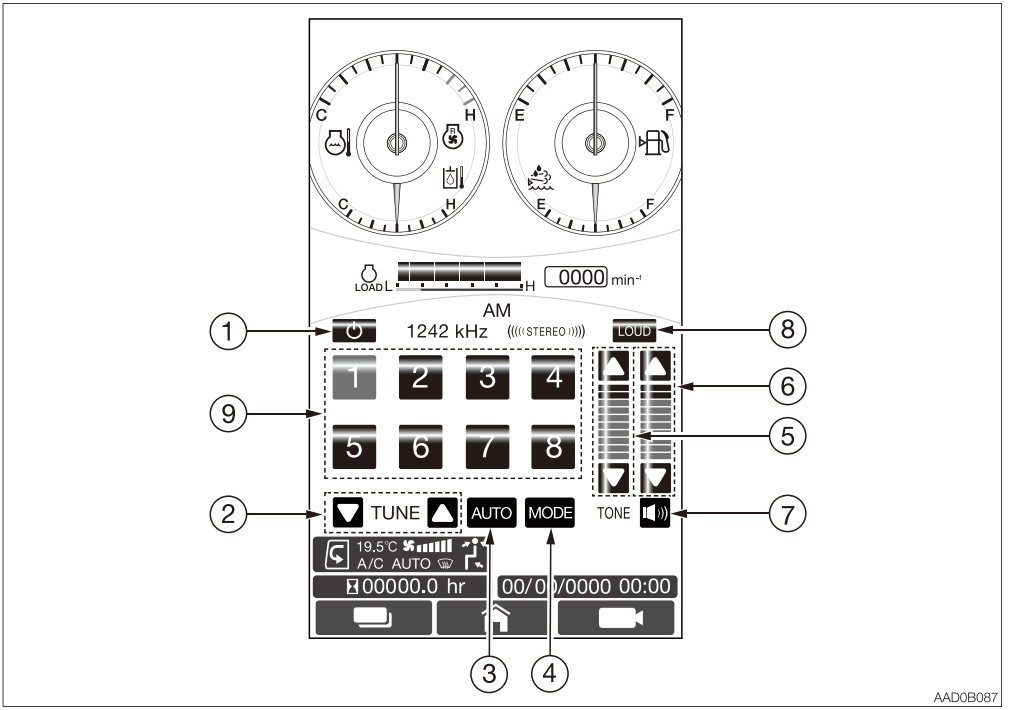

(1) POWER symbol
Touch operation
Tap this symbol to turn on the radio. Tap the symbol again to turn off the radio.

Dial operation
Select this symbol and press the dial to turn on the radio. Press the dial again to turn off the radio.

(2) Tuning symbol (TUNE ▽ △)
Touch operation
Tap and hold the symbol (TUNE ▽ or TUNE △) for two seconds or more to start seeking the receivable stations. When a station is received, seeking stops. To cancel tuning halfway, tap the symbol again.
Tap the symbol (TUNE △) to seek stations with higher frequency, or tap the symbol (TUNE ▽) to seek stations with lower frequency.

Dial operation
Select the symbol (▽ TUNE △) and press and hold the dial for two seconds or more to start seeking the receivable stations.
When a station is received, seeking stops.
To cancel tuning halfway, press the dial again.
Moving the dial up or to the right starts seeking the stations with higher frequency. Or turning it clockwise starts seeking the stations with higher frequency.
Moving the dial down or to the left starts seeking the stations with lower frequency. Or turning it counterclockwise starts seeking the stations with lower frequency.

(3) Auto store/Auto seek station symbol (AUTO)
Touch operation
Tapping and holding this symbol for two seconds or more will automatically assign receivable radio station to the preset symbols 1 to 8 (1 to 4 for AM, 5 to 8 for FM).

Dial operation
Selecting this symbol and pressing and holding the dial for two seconds or more will automatically assign receivable radio station to the preset symbols 1 to 8 (1 to 4 for AM, 5 to 8 for FM).

(4) Mode symbol (MODE)
Touch operation
Tapping this symbol will change the band from AM to FM, Bluetooth and DAB in this order.

Dial operation
Selecting this symbol and pressing the dial will change the band from AM to FM, Bluetooth and DAB in this order.

(5) **Tone control symbol**
**Touch operation**
Tap the up arrow symbol ( △ ) to increase the tone. Tap the down arrow symbol ( ▽ ) to decrease the tone. Tapping and holding either symbol will continuously change the tone.

**Dial operation**
Select the symbol ( △ ) or ( ▽ ) and press the dial to edit the tone. Moving the dial up or to the right increases the tone. Or turning it clockwise increases the tone. Moving the dial down or to the left decreases the tone. Or turning it counterclockwise decreases the tone.

(6) **Volume control symbol**
**Touch operation**
Tap the up arrow symbol ( △ ) to increase the volume. Tap the down arrow symbol ( ▽ ) to decrease the volume. Tapping and holding either symbol will continuously change the volume.

**Dial operation**
Select the symbol ( △ ) or ( ▽ ) and press the dial to edit the volume. Moving the dial up or to the right increases the volume. Or turning it clockwise increases the volume. Moving the dial down or to the left decreases the volume. Or turning it counterclockwise decreases the volume.

(7) **Mute symbol**
**Touch operation**
Tap the symbol to set to mute. Tapping the symbol again will cancel mute.

**Dial operation**
Select the symbol and press the dial to set to mute. Pressing the dial again will cancel mute.

(8) **Loudness symbol**
**Touch operation**
Tap the symbol to adjust the sound. Tapping the symbol again will cancel the sound adjustment.

**Dial operation**
Select the symbol and press the dial to adjust the sound. Pressing the dial again will cancel the sound adjustment.

(9) **Preset symbols (1 to 8)**

**Touch operation**

Tapping and holding the number to be selected for at least two seconds will store the current station into the memory.
To select the desired preset station, tap the number of the desired preset station.

**Dial operation**

Select the symbol and then press and hold the dial to store the current station into the memory.
To select the desired preset station, select the number of the desired preset station and press the dial.

# Bluetooth

## OPERATIONS ON THE SCREEN

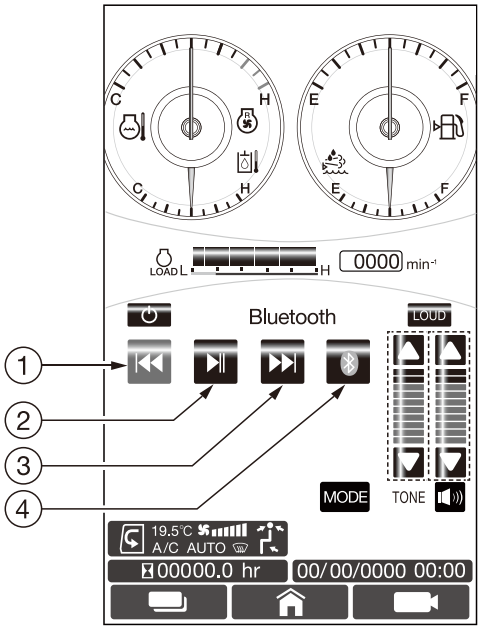


AAD0B088

(1) **Backward symbol ( )**
**Touch operation**
Tap this symbol to move one track backward and start playing back from the beginning of it.

**Dial operation**
Select this symbol and press the dial to move one track backward and start playing back from the beginning of it.

(2) **Playback/Pause symbol ( )**
**Touch operation**
Tap this symbol during playback to pause playback. Tapping the symbol again will start playback from the point where the playback was paused.

**Dial operation**
Select this symbol during playback and press the dial to pause playback. Pressing the dial again will start playback from the point where the playback was paused.

(3) **Forward symbol ( )**
**Touch operation**
Tap this symbol to move one track forward and start playing back from the beginning of it.

**Dial operation**
Select this symbol and press the dial to move one track forward and start playing back from the beginning of it.

(4) **Bluetooth symbol**
**Touch operation**
Tap the symbol to start pairing.

**Dial operation**
Select this symbol and press the dial to start pairing.

## Digital Audio Broadcasting (DAB)

### <PRESET SCREEN>

### OPERATIONS ON THE SCREEN

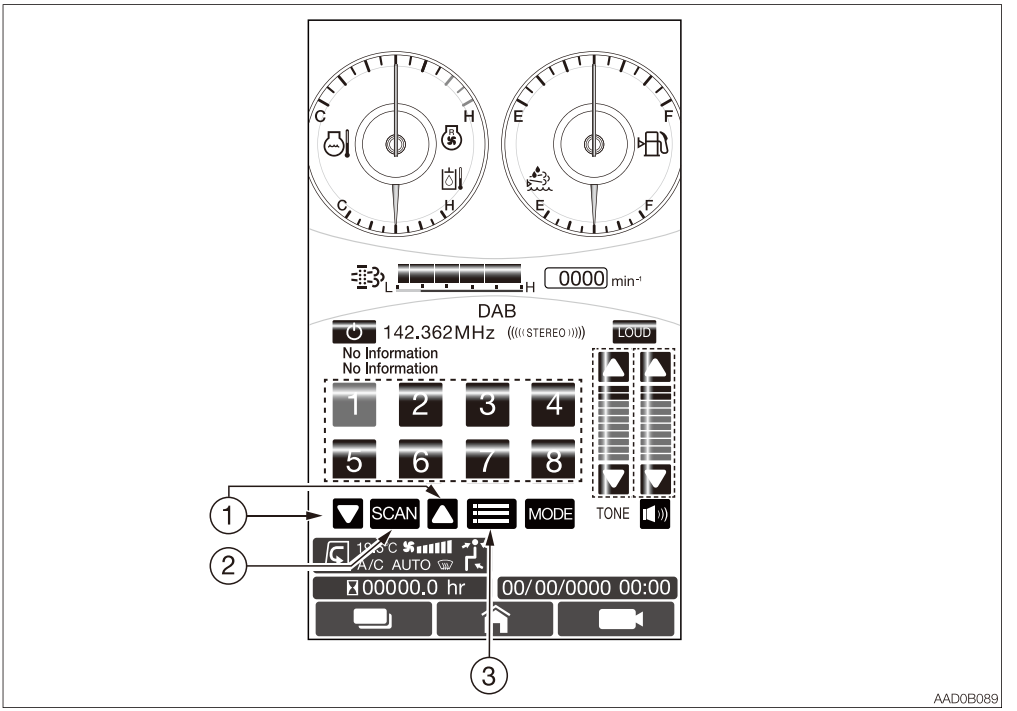


This screen will not be displayed if the unit is set to an area that does not receive DAB radio.

(1) **Down or Up arrow symbol (▽ or △)**
**Touch operation**
Tap either symbol to switch between the receiving frequencies.

**Dial operation**
Select the symbol (▽ SCAN △) and press the dial to start editing the receiving frequencies. Move it up/down or left or turn it to switch between the receiving frequencies.

(2) **Scan symbol (SCAN)**
**Touch operation**
Tap and hold this symbol for two seconds or more to update the DAB list.

**Dial operation**
Select this symbol and press and hold the dial for two seconds or more to update the DAB list.

(3) **Program type (PTY) select symbol**
**Touch operation**
Tap this symbol to switch to the program type display.

**Dial operation**
Select this symbol and press the dial to switch to the program type display.

<PTY SCREEN>

## OPERATIONS ON THE SCREEN

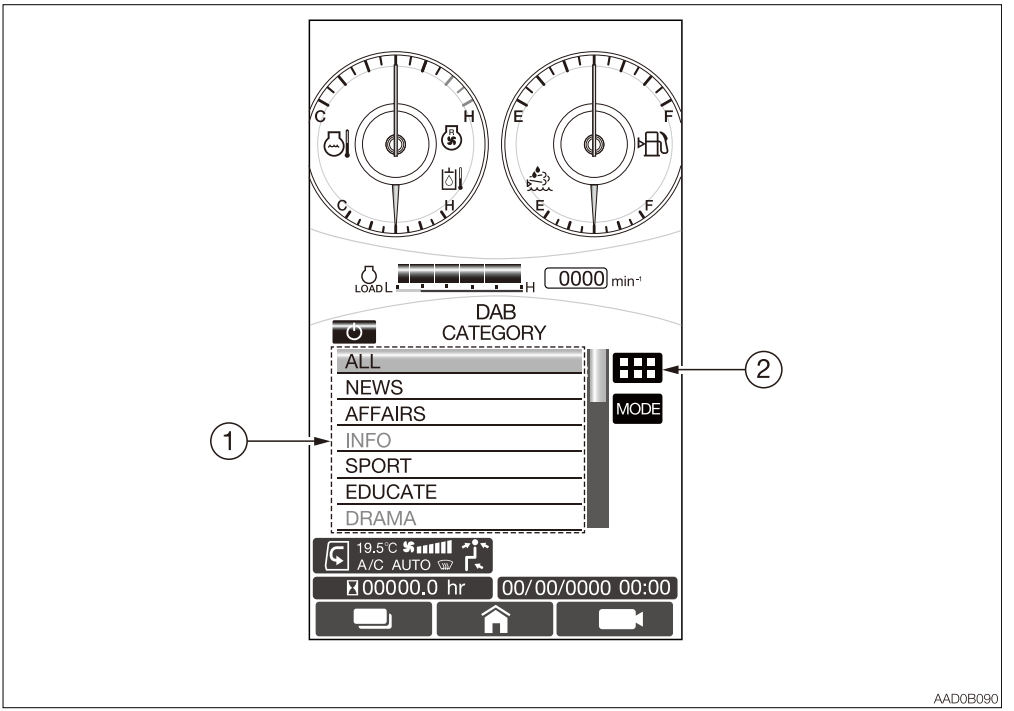

(1) **Program type (PTY) symbol (1 to 29)**
**Touch operation**
Tap the desired program type to be set. The screen changes to the program screen of the selected PTY item.
Slide your finger upward while tapping and holding the item to scroll down.
Slide your finger downward while tapping and holding the item to scroll up.

**Dial operation**
Move the dial up/down or left/right to move the cursor. After moving the cursor to the desired program type to be set, press the ENTER button to confirm. The screen changes to the program screen of the selected PTY item.

**Note:** If no program is available, the PTY item is displayed in gray.

(2) **Preset select symbol**
**Touch operation**
Tap this symbol to switch to the preset display.

**Dial operation**
Select this symbol and press the dial to switch to the preset display.

<PROGRAM SCREEN>

OPERATIONS ON THE SCREEN

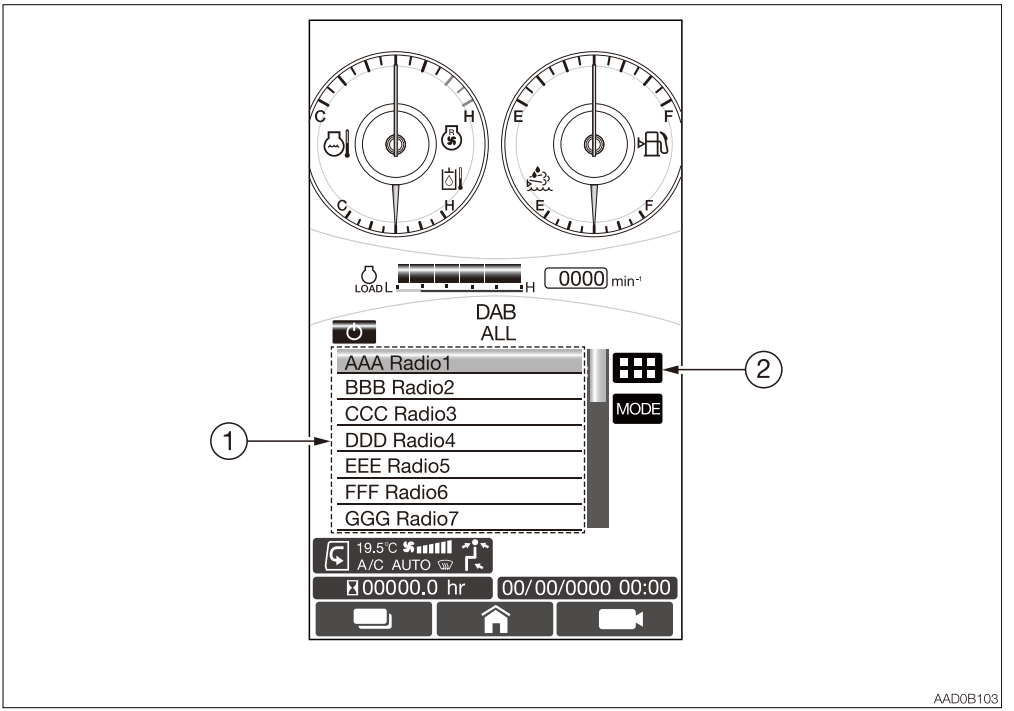

(1) **Program symbol**
**Touch operation**
Tap the desired program. The screen changes to the preset screen, and the selected program will start playing.
Slide your finger upward while tapping and holding the item to scroll down.
Slide your finger downward while tapping and holding the item to scroll up.

**Dial operation**
Move the dial up/down or left/right to move the cursor. Move the cursor to the desired program, and press the ENTER button to confirm.
When the setting is confirmed, the screen changes to the preset screen, and the selected program will start playing.

(2) **Preset select symbol**
**Touch operation**
Tap this symbol to switch to the preset display.

**Dial operation**
Select this symbol and press the dial to switch to the preset display.

## Phone screen

### OPERATIONS ON THE SCREEN

To use this feature, your mobile phone must be paired to the machine.
Refer to “Bluetooth” on page 2-106.

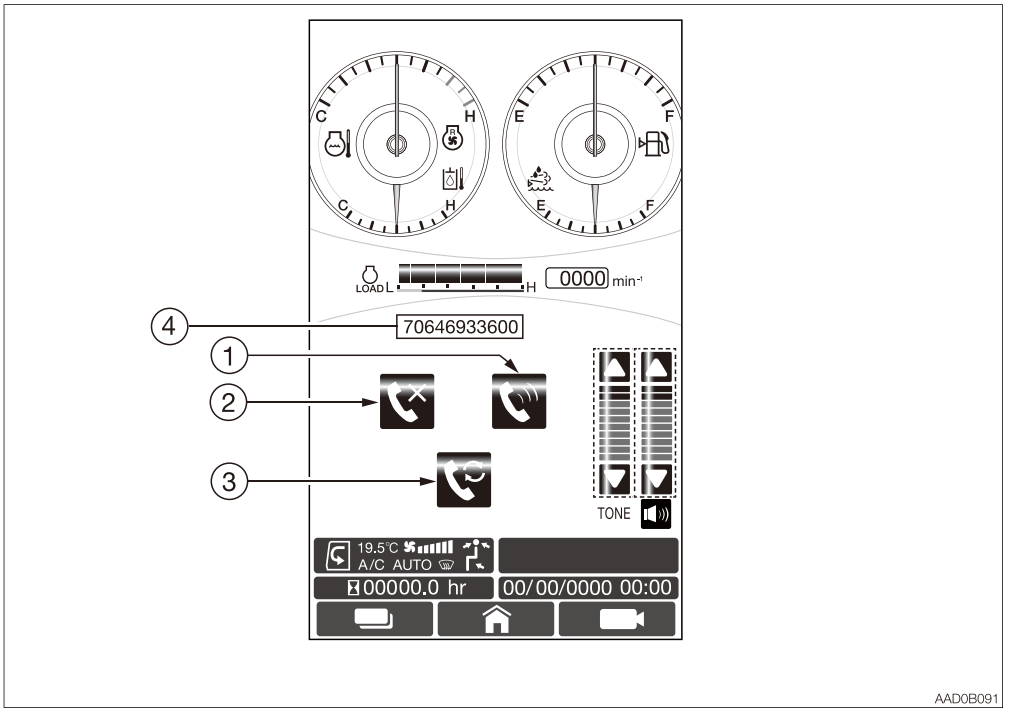

### MIC jack

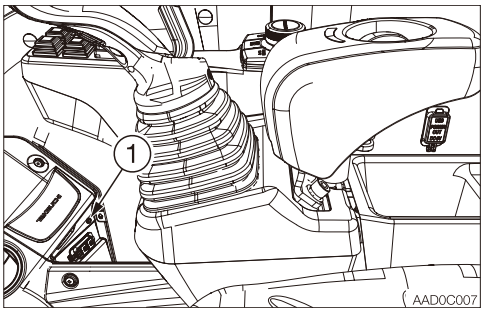


To call, the microphone must be plugged into the MIC jack (1). Plug your microphone into the jack and use your phone.

The phone screen appears when an incoming call is received.

(1) **Answer call symbol**
**Touch operation**
Tap this symbol to answer a phone call.

**Dial operation**
Select this symbol and press the dial to answer a phone call.

(2) **End call symbol**
**Touch operation**
Tap this symbol to end a phone call.

**Dial operation**
Select this symbol and press the dial to end a phone call.

(3) **Redial symbol**
**Touch operation**
Tap this symbol to redial.

**Dial operation**
Select this symbol and press the dial to redial.

(4) **Phone number display**
Displays the phone number of the person you are calling.

## AUXILIARY HYDRAULIC LINES (IF EQUIPPED)

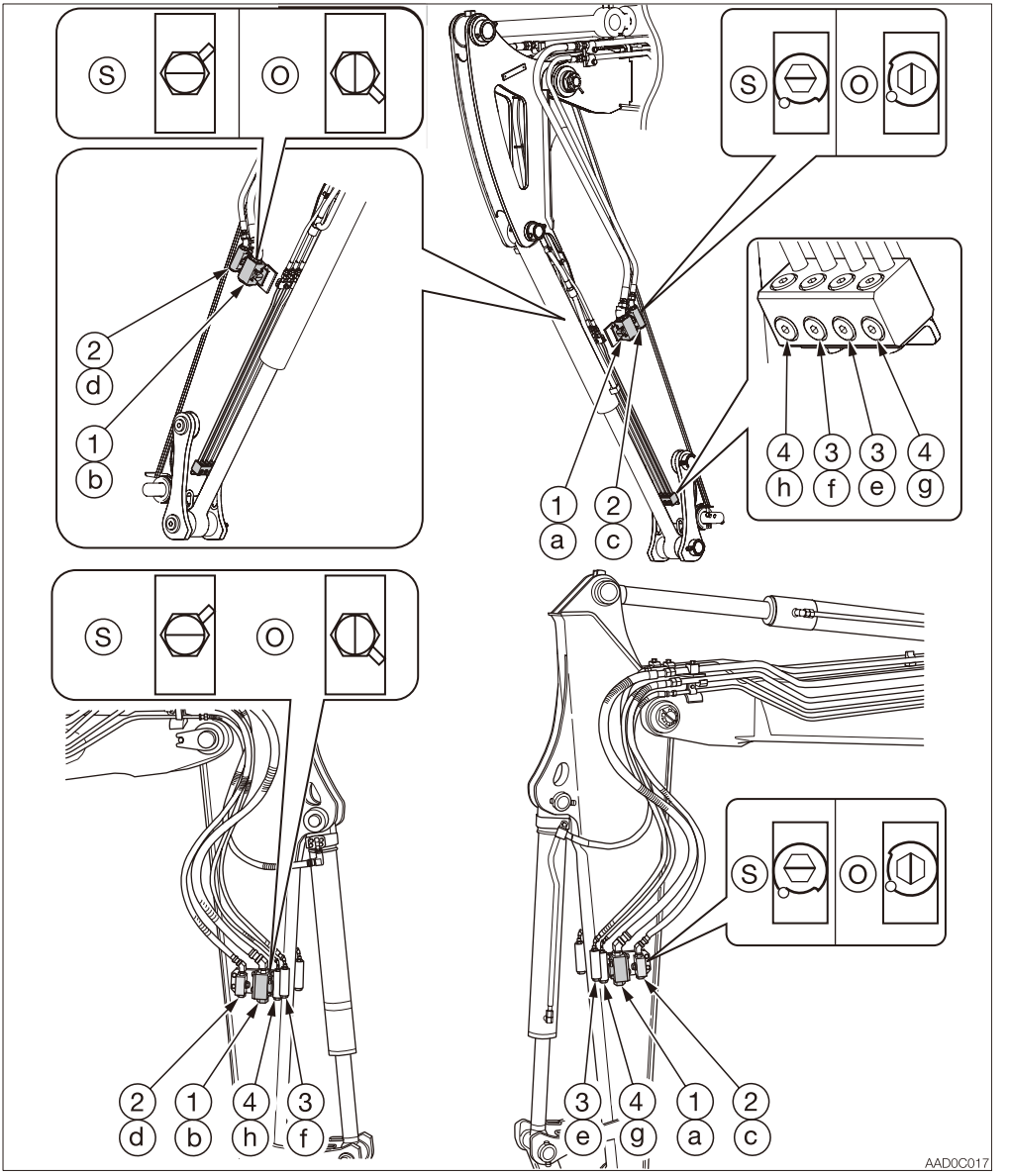

**⚠ WARNING**

**Oil may spurt out if pipes disconnected before releasing the pressure in the hydraulic system.**

- **Immediately after the engine is stopped and while the safety lock lever is still in the unlock position, turn the starter switch to ON and press each auxiliary hydraulic switch several times to release the pressure from the auxiliary hydraulic circuit.**
- **Press the air breather button to relieve the tank pressure.**
- **When disconnecting hoses, stand to the side and loosen them slowly to gradually release the internal pressure before removing.**

These lines deliver the hydraulic oil necessary for operating a hydraulic breaker, crusher or other attachments.

(1).....First auxiliary hydraulic lines
(2).....Second auxiliary hydraulic lines
(3).....Third auxiliary hydraulic lines
(4).....Fourth auxiliary hydraulic lines

Stop valve
(S): Close
(O): Open

**Connecting the hydraulic circuits**

To connect the attachment hydraulic lines, observe the following procedures:

1. Release the pressure remaining in the lines, and then close the stop valve. Refer to “Releasing the residual pressure” on page 2-117.
2. Remove the plugs.
3. Connect the attachment hydraulic lines to ports (a/c) and (b/d). When installing a hydraulic breaker, connect the supply circuit to the port (a) and the return circuit to port (b).
4. When connecting is complete, purge air from the hydraulic lines.
   a. Start the engine and run it at a low idle speed with no load for 10 minutes.
   b. With the engine running in low idle, operate the auxiliary hydraulic switches repeatedly (approx. 10 times) to purge air from the hydraulic lines.
   c. Stop the engine and wait for at least 5 minutes until bubbles escape from the hydraulic oil in the tank.

**IMPORTANT: Follow the procedures for purging air as instructed by the attachment manufacturer, if applicable.**

5. Check for oil leaks.

**Disconnecting the hydraulic circuits**

1. Release the pressure remaining in the lines, and then close the stop valve. Refer to “Releasing the residual pressure” on page 2-117.
2. Disconnect the lines from the ports (a/c) and (b/d).
3. Install the plugs.

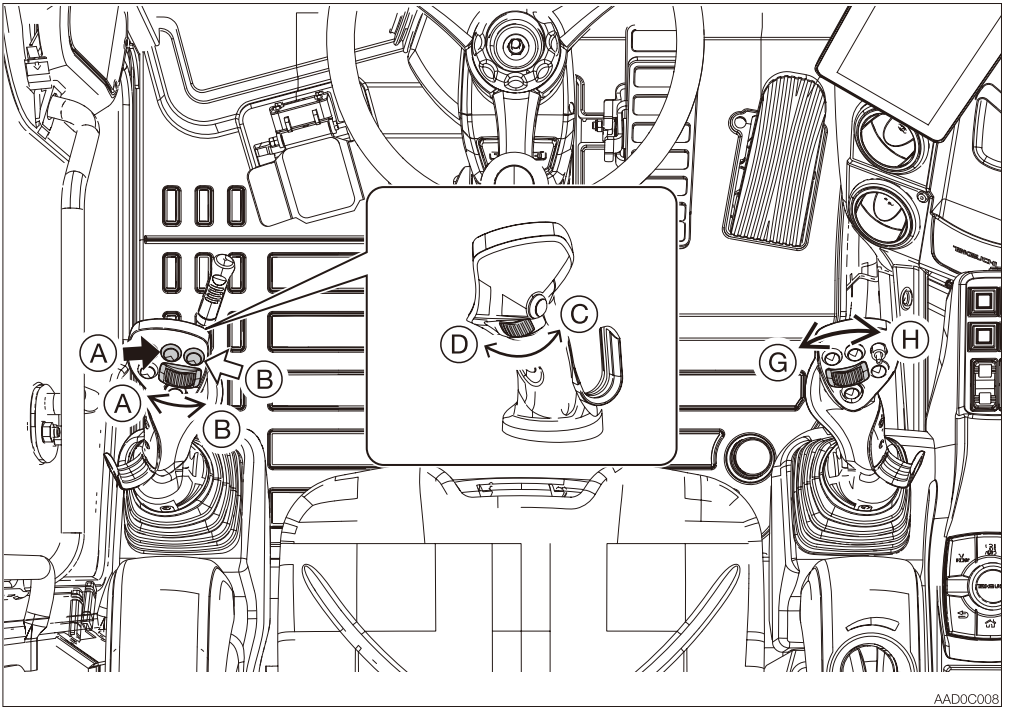
A
B
A
B
C
D
G
H
AAD0C008

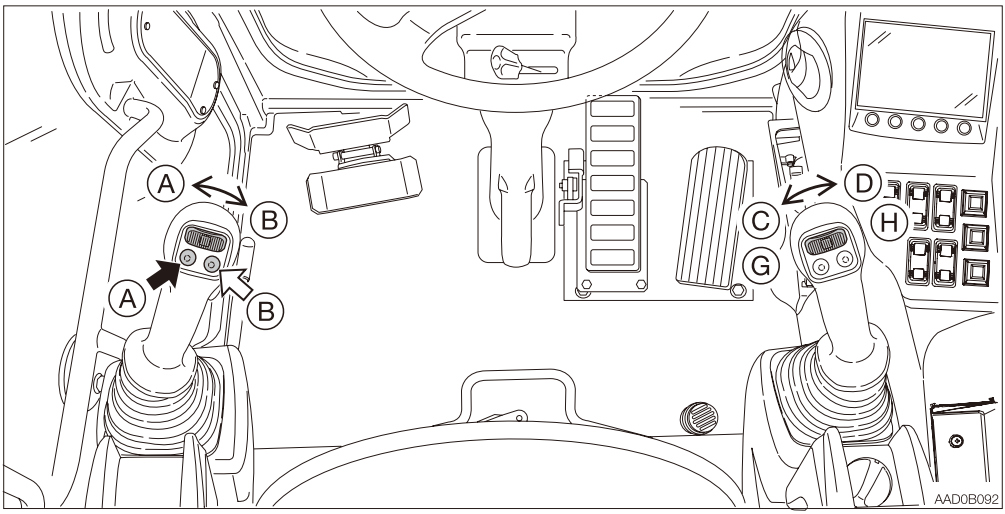


**Operating**

Press those buttons to control the flow of the oil in the first/second auxiliary hydraulic lines.

(A).....Hydraulic oil flows to left auxiliary line (a).

(B) .....Hydraulic oil flows to right auxiliary line (b).

(C) .....Hydraulic oil flows to left auxiliary line (c).

(D) .....Hydraulic oil flows to right auxiliary line (d).

(G) .....Hydraulic oil flows to left auxiliary line (g).

(H) .....Hydraulic oil flows to right auxiliary line (h).

**Releasing the residual pressure**

After the auxiliary hydraulic circuits have been used, pressure remains in the circuits. This is called the residual pressure. Release this residual pressure before disconnecting the lines.

Perform the residual pressure releasing within 10 minutes after the engine stopping.

1. Park the machine on a flat, rigid and safe ground.
2. Stop the engine.
3. Lower the safety lock lever to the unlocked position.
4. Turn the starter switch to the ON position.
5. Press the auxiliary hydraulic switches several times to release the residual pressure in the auxiliary hydraulic circuitry.

**Third auxiliary hydraulic switch and button (If equipped)**

**IMPORTANT: The specifications of the third auxiliary service differ depending on the machine used (the pipe (e) is high- or low-pressure type). Install the attachment that meets the specifications. For details on the specifications of the third auxiliary service, contact your sales or service dealer.**

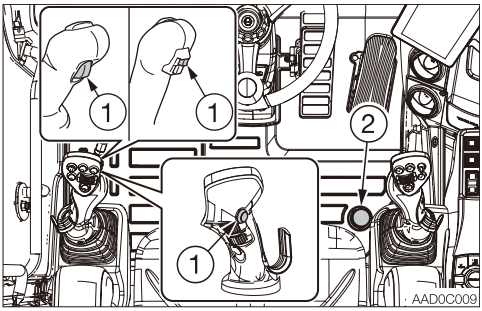


The third auxiliary hydraulic lines are normally used to control the “quick attachment” installed to connect/disconnect the bucket. When the safety lock lever is released after the engine is started, hydraulic oil flows into the pipe (e). This allows the pressure in the (e) side to increase and to prevent the pin inserted on the bucket from coming out. If the pressure in the (e) side drops, the alert that the bucket may come out is indicated by the warning lamp and the alarm. For a safety reason, the bucket can be disconnected only when the button (1) and the switch (2) are pressed at the same time. When they are pressed, the hydraulic oil flows into the line (f) to increase the pressure there. As the result, the pin on the bucket comes out and the bucket is removed from the machine.

- **Bleeder unit for simultaneous use with the auxiliary 1st and 2nd (if equipped)**
  Pressing both the auxiliary 3rd button (1) and the switch (2) makes it possible to release internal pressure from the auxiliary 3rd (e side), auxiliary 1st and auxiliary 2nd at the same time. (The pressure is kept drawn for six seconds after the button and the switch are released.) This enables faster attachment change.

**Auto pressure release setting (if equipped)**

**IMPORTANT: This setting is kept even after the key is set to OFF. Always check the machine setting before the operation.**

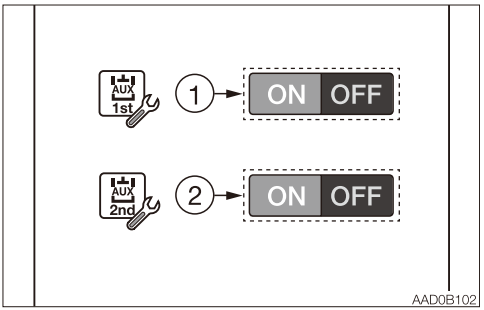


You can set the auto pressure release setting of the auxiliary 1st/2nd to ON or OFF on the multi-information display.
(1) Auxiliary 1st auto pressure release setting
(2) Auxiliary 2nd auto pressure release setting

Refer to “10. Auto pressure release setting (if equipped)” on page 2-60.

### Third auxiliary hydraulic warning lamp




This lamp illuminates and an alarm sounds if the auxiliary 3rd hydraulic pressure drops abnormally while the engine is running.

### Auxiliary 2/4 select button (If equipped)

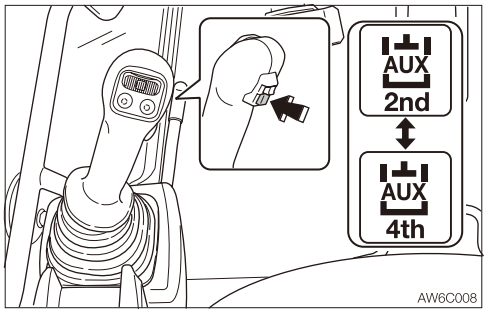


This button is used to switch the operation between the second auxiliary and the fourth auxiliary.
Pressing this button while the second auxiliary symbol is displayed on the LCD will switch to the fourth auxiliary operation.
Pressing this button one more time will display the second auxiliary symbol on the LCD to indicate that the second auxiliary operation is resumed.
The actual operation is performed with the 2nd/4th auxiliary switch (slider switch).
Refer to “Auxiliary 2nd/4th switch (If equipped)” on page 2-73.

**Setting the flow rate and pressure**
The flow rate and pressure in the auxiliary 1st, 2nd or 4th can be set to the desired values.
For details, refer to “1. Auxiliary 1st flow rate setting” on page 2-49 or “2. Auxiliary 2nd/4th flow rate setting” on page 2-52.

**IMPORTANT: The set values are not the guaranteed values. They should be used as rough standards. For a precise setting, set the value while observing the measured pressure.**

## OPERATING THE MACHINE WITH AN ACCUMULATOR

**⚠ WARNING**

**Be sure to handle the high-pressure nitrogen gas enclosed in the accumulator with care. If handled incorrectly, it could explode and cause serious injury. Strictly observe the following precautions:**

- **Do not disassemble.**
- **Do not allow flame near or throw it into a fire.**
- **Do not drill, weld or fuse.**
- **Do not subject it to physical shock such as hitting, rolling or dropping.**
- **Before disposing of the unit, the sealed gas must be drained. Contact a Takeuchi service agent for help.**

For a machine with an accumulator, the residual pressure in the auxiliary hydraulic circuit or the working equipment circuit can be released even after the engine is stopped.

### Releasing residual pressure

Residual pressure refers to the pressure that remains in the hydraulic circuit after the operation. Release the residual pressure as necessary by using the following steps. Perform the residual pressure releasing within 10 minutes after the engine stopping.

1. Return the throttle controller to idle the engine at low speed.
2. Lower the bucket and dozer blade to the ground.
3. Check that the safety lock lever is in the released position.
4. Stop the engine.
5. Turn the starter switch to the ON position.

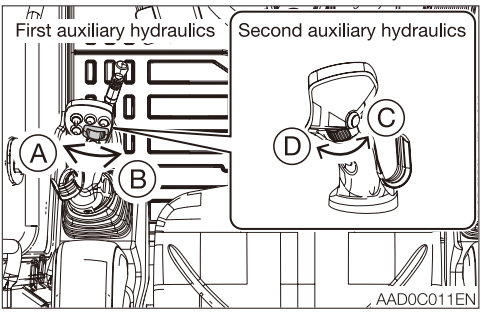


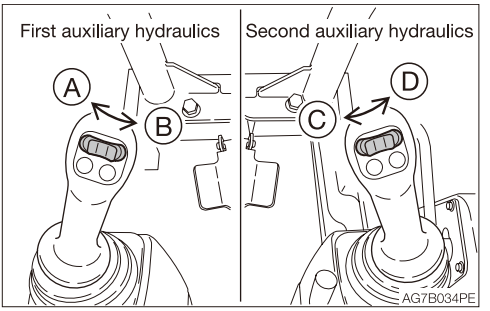


6. Move or press the auxiliary hydraulic switches several times to release the residual pressure in the circuitry.
7. Move all the control levers and pedals several times in all directions to release the pressure from the working equipment circuitry.
8. Raise the safety lock lever to engage the lock.

### Lowering the boom when the engine has stopped

Perform this operation within 10 minutes after the engine stopping.

1. Sit at the operator's seat.
2. Turn the starter switch to the ON position.
3. Lower the safety lock lever to the unlock position.
4. Slowly push the operating lever forward to lower the boom.

## LIFTING SAFETY DEVICE (IF EQUIPPED)

The lifting safety devices include an emergency shut-off valve and an overload warning device.

### Emergency shut-off valve

**⚠ WARNING**

- **If the boom or arm stops due to the breakage of hose, immediately move away from the load being lifted and go to a safe location.**
- **If the emergency shut-off valve hose breaks, immediately stop operation.**
- **Since the emergency shut-off valve (1) is a safety device, you must not disassemble it and/or replace or adjust its internal part. Takeuchi shall not be held responsible for any injuries, accidents or product malfunction caused by disassembly.**

The emergency shut-off valve (1) prevents the boom or arm from falling rapidly in case the hydraulic hose is broken.

### Boom

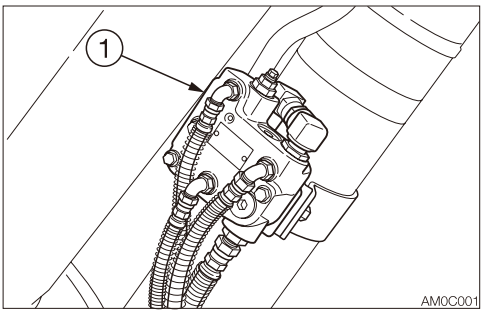


### Second boom, 2-Piece boom (Two cylinders)

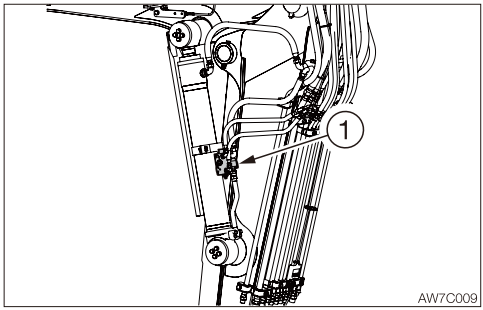


### Second boom, 2-Piece boom (One cylinder)

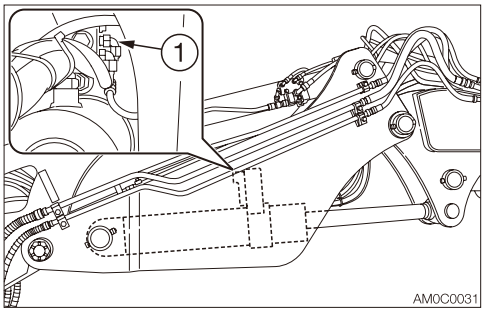

### Arm

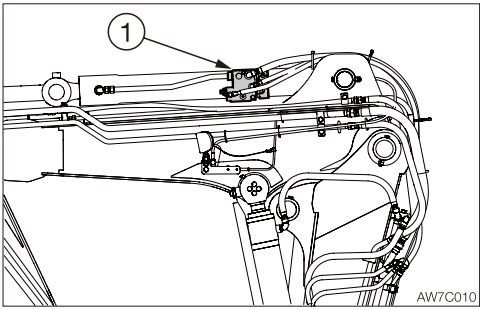


If the hose breaks and the emergency shut-off valve (1) is activated to stop the operation of boom or arm, lower the boom or arm by slowly operating the lever while ensuring safety. Ask your sales or service dealer for repair.

### Overload warning device

**⚠ WARNING**

**If the overload is not removed after the overload warning horn is sounded, the machine may tip over. If the horn starts sounding, stop operating the machine and lighten the load.**

If a weight greater than the lifting capacity is applied or lifted, the overload warning device is activated and the horn sounds. (When the lift overload warning switch is turned on.)

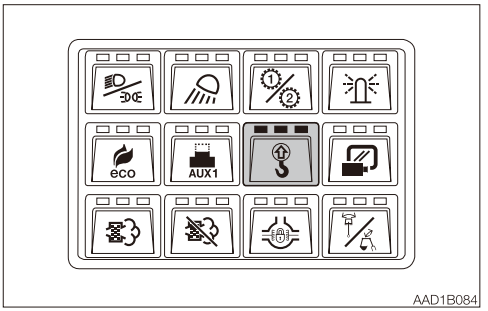


### Lift overload warning switch

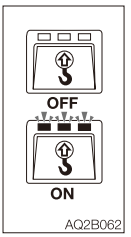


..... Off

..... On (lit): Normal
(flashing): Abnormal

Pressing this switch changes the on or off state of the lamps/lights.

## OUTRIGGER (IF EQUIPPED)

**⚠ WARNING**

- **Select a firm and uniform ground for outrigger pads (surfaces to contact the ground).**
- **When traveling on a public road, secure the outriggers with the stoppers. When retracting the outriggers, make sure that the outrigger pads (the surfaces to contact the ground) are within the machine width. Failure to do so could cause minor collisions.**

### Outrigger switch

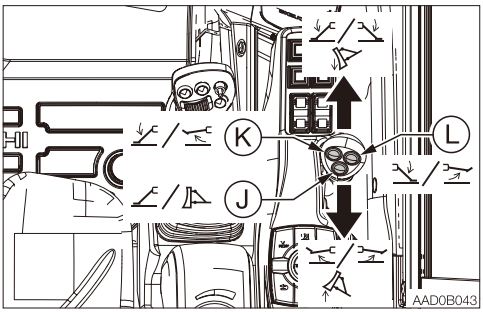


(J).....Blade/outrigger select operation
(K) .....Left outrigger operation
(L).....Right outrigger operation

### Operation

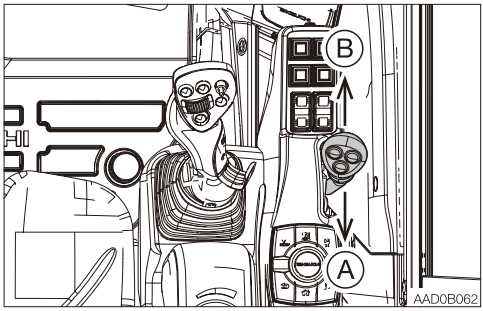


The outrigger operation is done by the blade lever.
(A).....Outriggers Raise
(B) .....Outriggers Lower

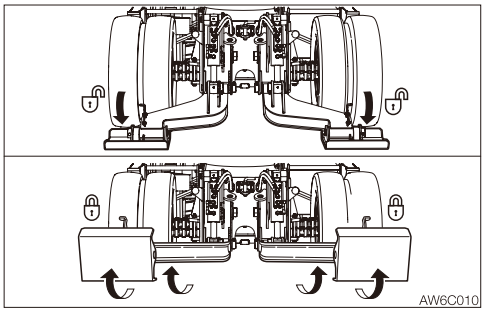

## Stoppers

**⚠ WARNING**

**When traveling on a public road, retract the outriggers within the machine width and install the stoppers.**

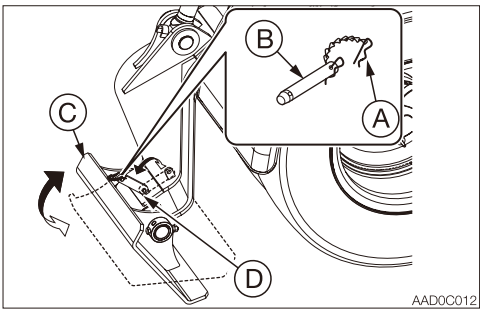


**IMPORTANT: Remove the stoppers before lowering the outriggers. Failure to do so could damage the stoppers.**

1. Remove the spring cotter pin (A) and pull out the stopper pin (B).
2. Slowly lower the outrigger pad (C).
3. Insert the stopper pin (B) into the holder hole (D) on the rod.
4. Install the spring cotter pin (A) on the stopper pin (B) groove to prevent the stopper pin (B) from coming out.

## Grab bar (if equipped)

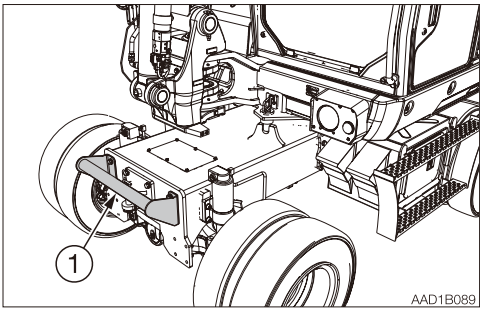


Hook the grab bar (1) on the attachment when traveling on a public road.

## FUEL SUPPLY PUMP

**⚠ DANGER**

**Do not use the fuel supply pump for gasoline or hydraulic oil. Doing so could result in explosion or damage.**
**Only use the fuel supply pump for diesel fuel.**

**⚠ WARNING**

- **Do not keep the right side cover open on a windy day or if the machine is parked on a slope.**
- **When opening and closing the right side cover, be careful not to get your hands or other parts of your body caught by the cover.**
- **When storing, lock the tip of the hose. Failure to do so causes a large fuel spill.**

**⚠ CAUTION**

**Do not fill the tank with additional fuel after the fuel supply pump stops. Doing so could cause the fuel to spurt out.**

This device automatically supplies fuel to the fuel tank and stops automatically when the fuel tank is full.

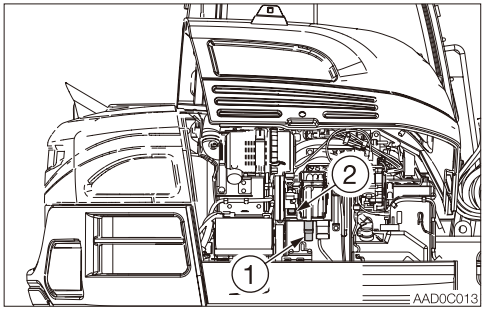


1. Open the right side cover.
2. Release the lock on the tip of the hose.

**Note:** Fueling cannot be done unless the lock is released.

3. Insert the pump's nozzle (1) in the fuel supply tank.
4. Press the fuel supply symbol side of the refill switch (2) to start refilling the tank.
   The pump automatically stops once the fuel tank becomes full.
   To manually stop the pump, press the fuel supply symbol side of the refill switch (2) again.

**Note:** To stop filling at a desired level, press the switch (2).

5. Store the nozzle.

## USB PORT (IF EQUIPPED)

**⚠ WARNING**

- **Do not deform, disassemble, modify or short out the port. Doing so could cause heat generation, ignition or electric shock.**
- **Use only those electric devices that support this USB port. The rated output is 5 V/2.1 A.**
- **When using the port, be sure to insert the device/plug as far as it will go.**

**⚠ CAUTION**

- **The USB port is not waterproof when used as a power source. Keep the cap on when not in use.**
- **Be sure to connect the device/plug to the port with the correct sides. If forcibly inserted with the incorrect sides, the USB port could be damaged.**
- **Remove the device/plug from the USB port after use or when not in use. Otherwise it could cause fire or electric shock.**

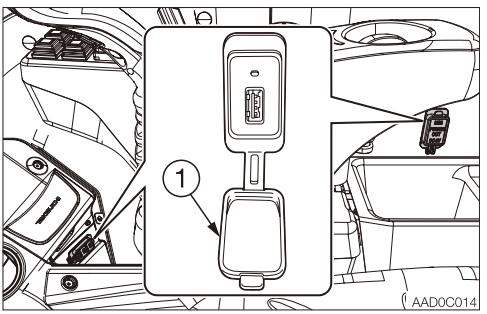


You can draw power from this USB port. To use, open the cap (1).

## ENGINE AUTO STOP

**⚠ WARNING**

**Do not leave the machine when the attachment is raised.**

The term “engine auto stop” refers to a function that automatically stops the engine. When the engine auto stop function is on, the machine engine automatically stops to reduce fuel consumption, under the conditions listed below.
When the following conditions are met, the buzzer sounds and the engine stops in three minutes.

1. Safety lock lever is raised
2. Vehicle error code is not generated.
3. Engine error code is not generated.
4. Standstill regeneration is not being performed.
   Refer to “Standstill regeneration” on page 3-34.

For details about turning on or off this function, ask your sales or service dealer for help.

**IMPORTANT: If the certain conditions are met when the engine auto stop is on, the buzzer sounds once every minute. The buzzer continues to sound once every minute even after the engine stops. Leaving the starter switch at the ON position will deplete the battery. Be sure to turn the switch to the OFF position after the engine is stopped.**

**Note:**

- The engine auto stop does not function during the DPF auto regeneration.
- If the safety lock lever is raised to the lock position when the engine auto stop is on, the engine speed will be changed to Low Idle; control of the engine RPM will be disabled. To enable the engine RPM control, lower the safety lock lever to the unlock position.

## AUTO CAMERA MODE

When the machine starts traveling, the display is automatically switched to the camera image. When the machine stops traveling, the display returns to the Home screen.
This function can be manually turned on or off. For setting the auto camera mode, refer to “ON/OFF setting” on page 2-56.

## ARMRESTS

**⚠ WARNING**

- **Adjust the armrests and firmly secure them.**
- **Do not make any adjustments while operating the machine.**

### Adjusting the armrests

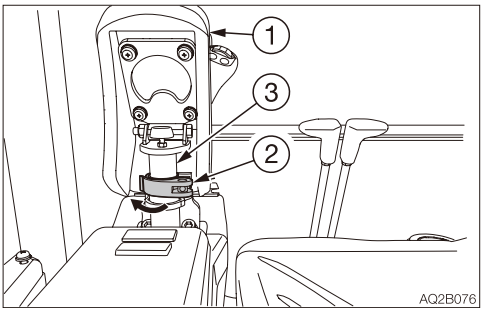


1. Raise the upper part (1) of the armrest.
2. Loosen the clamp (2).
3. Tighten the clamp (2) at the desired position to secure the armrest (3).
4. Lower the upper part (1) of the armrest.