OPERATION



BEFORE STARTING OPERATION

GETTING ON OR OFF THE MACHINE

⚠ WARNING

- **Do not jump on or down from the machine. Never attempt to get on or off the moving machine.**
- **When getting on or off the cab, first fully open the door to the locked position and check that it does not move.**

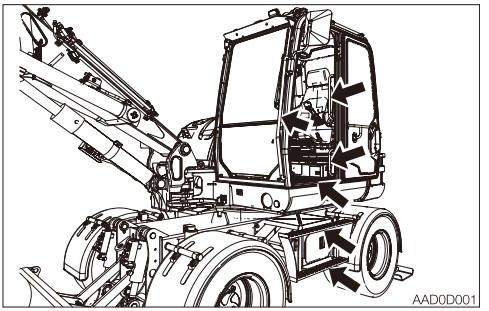

- **Climb up/down the steps holding the handrail to support your weight in a three point secure stance (hand and feet).**
- **Never use the safety lock lever or control levers as hand holds.**

WALK-AROUND INSPECTION

Perform the walk-around inspections once a day before starting the engine for the first time that day.
Refer to “MAINTENANCE, Walk-around inspection”, on pages 5-20 and 5-21.

DAILY INSPECTION

Perform the daily inspections once a day before starting the engine for the first time.
Refer to “MAINTENANCE, Daily inspection (Every 10 hours)”, on pages 5-22 to 5-36.

STARTING AND STOPPING THE ENGINE

BEFORE STARTING THE ENGINE

1. Adjust the seat for a comfortable operating position.
2. Fasten the seat belt.

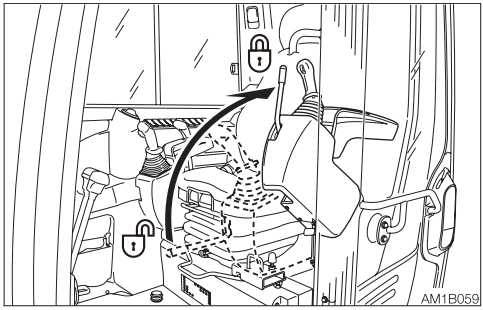

3. Check that the safety lock lever is in the locked position.

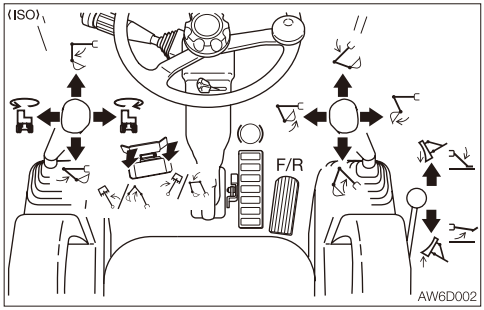

4. Check that all levers and pedals are in the neutral position.

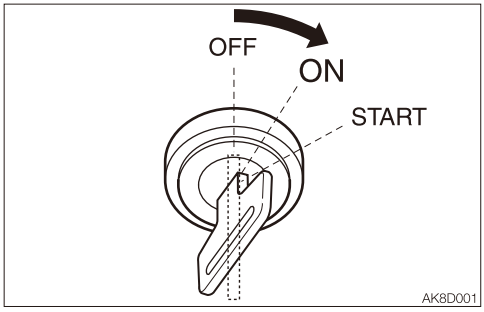

5. Insert the key into the starter switch, turn it to the ON position, then perform the following inspections:

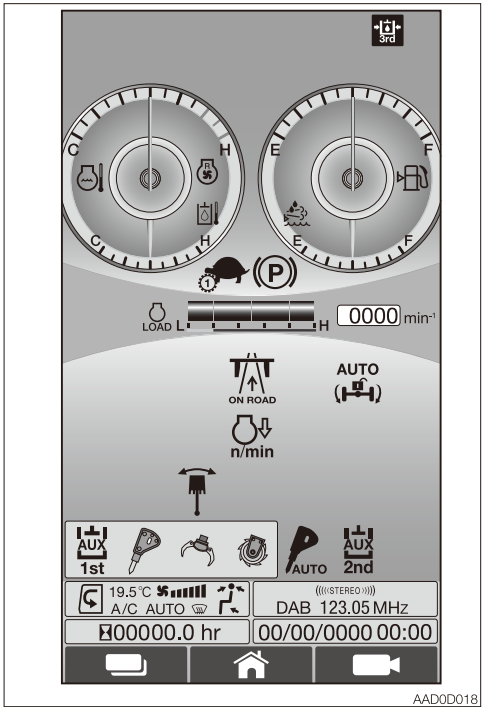

- All lamps except the deceleration lamp are off. If the auxiliary 3rd is equipped, the third auxiliary hydraulic warning lamp also lights up.
- Turn on the light switch to check that the boom light, front lights, side lights, tail lamp, working light, switch lamps, headlights, and position lights turn on.
- Check the fuel level.
- Check the DEF/AdBlue® level.

If a lamp does not light or the alarm is not sounded, the display or a wire may be damaged. Ask your sales or service dealer for repair.

STARTING THE ENGINE

⚠ WARNING

- Clear all personnel from the work area.
- Sound the horn to warn people around the machine.

IMPORTANT: The engine runs for 20 consecutive seconds in maximum. If the engine fails to start, wait for 1 minute, and then try again to start.
IMPORTANT: If the engine stalls due to fuel shortage, add fuel, turn the key to the ON position for 60 seconds, and then turn it to the START position. Running the starter for a long time before there is enough fuel is going through can cause the starter to fail.
IMPORTANT: If the error lamp lights up to indicate that the engine has failed to start, the electronic controller on the engine initiates the start lock to protect the engine.
To cancel the start lock, leave the key in the OFF positon for approximately 30 seconds.

Normal starting

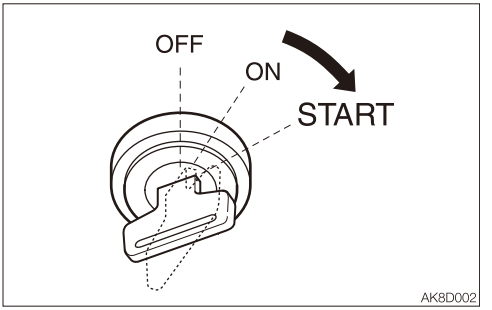

1. Turn the starter key to the START position and start the engine.
   The engine does not start unless the safety lock lever is in the locked position at this point.
2. Once the engine starts, release the key.
   The key automatically returns to the ON position.
3. Check that the warning lamps are off.
   For safety reasons, it is designed that the deceleration function is activated to set the engine revolutions to low idling whenever the engine is started.
   Cancel the deceleration mode by pressing the deceleration button as necessary.
4. Warm up the engine.
   Refer to “Warming up the engine” on page 3-6.
5. After the completion of the warming up, press the deceleration button to cancel the deceleration mode.

Starting in cold climates

⚠ WARNING

- **Never use starting fluid on this engine, as the starting fluid could cause an explosion.**
- **If the engine does not start properly despite of the normal operation of the starting aids such as a glow plug, stop the starting operation by turning the starter key to the OFF position.**

IMPORTANT: If the coolant temperature or atmospheric temperature is 10 °C or below, the low coolant temperature indicator lamp lights up and the engine speed and engine output are limited for 20 seconds in maximum.

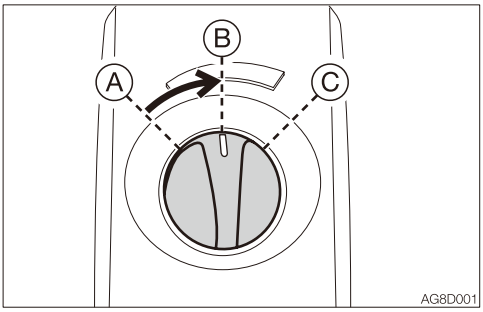

1. Turn the throttle controller to the middle position.

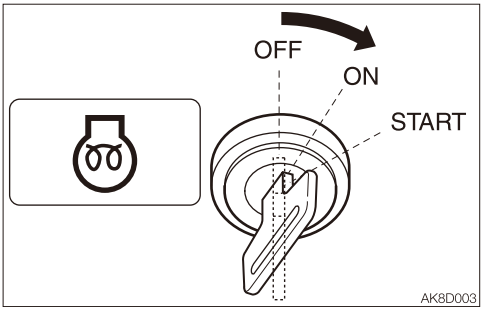

2. Turn the starter key to the ON position, and confirm that the glow lamp is on.
3. After the glow lamp goes out, press the deceleration button (to cancel the deceleration mode), and then turn the key to the START position to start the engine. The engine does not start unless the safety lock lever is in the locked position at this point.
4. Once the engine starts, release the key. The key automatically returns to the ON position.
5. Check that the warning lamps are off.
6. Return the throttle controller to the original position and warm up the engine.
   Refer to “Warming up the engine” on page 3-6.

WARMING UP THE ENGINE

IMPORTANT: Do not accelerate the engine and run it without load until the engine warm up is complete.
Do not warm up the engine for a long time (20 minutes or more). When idling is required, occasionally place a load or run the engine at medium speed.

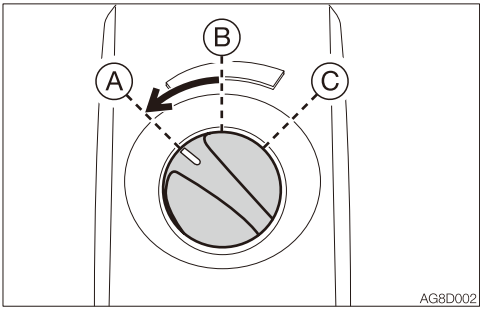

1. Return the throttle controller, and then run at a low idle with no load for 10 minutes.

STOPPING THE ENGINE

IMPORTANT: Do not stop the engine suddenly when operating with heavy loads or at the maximum speed. Doing so may cause the engine to overheat or seize. Never stop running the engine suddenly except in emergency.
IMPORTANT: The SCR system operates for up to 2 minutes after the starter switch is turned to the OFF position.
When removing the batteries or electrical connectors for inspection or maintenance, wait for at least 2 minutes after the starter switch is turned to the OFF position. Otherwise, the system could fail.

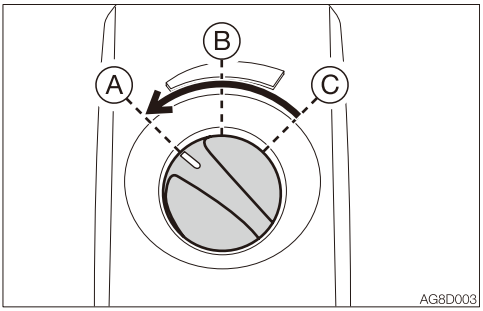

1. Return the throttle controller.
2. Idle the engine for about 1 minute to gradually let it cool.

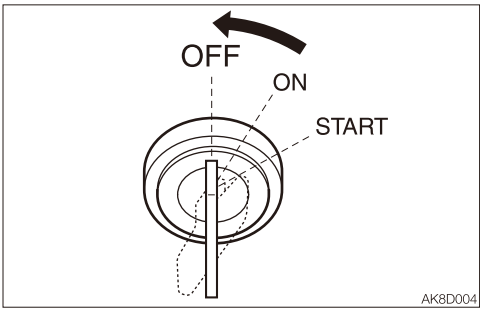

3. Turn the starter key to the OFF position to stop the engine.

MEMO

OPERATING THE MACHINE

LEVER PATTERN (ISO PATTERN)

⚠ WARNING

- Before starting operation, carefully check which lever pattern you are going to use.
- It is described using the ISO pattern in this manual.

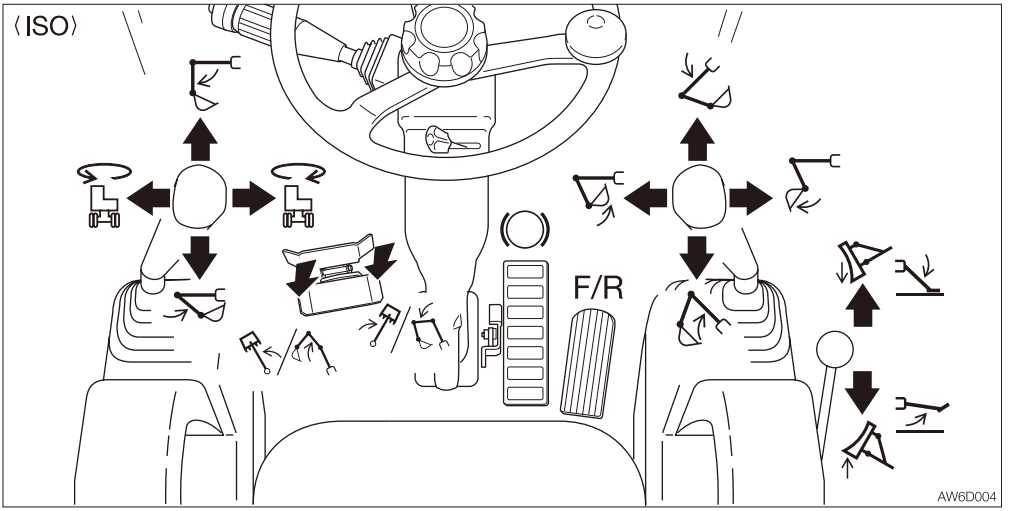

	Brake	F	Forward Travel	R	Reverse Travel
	Arm Out		Boom Lower		
	Arm In		Boom Raise		
	Upperstructure Slew Left		Bucket Load		
	Upperstructure Slew Right		Bucket Dump		
	Boom Swing Left Second Boom Raise (2-piece boom)		Boom Swing Right Second Boom Lower (2-piece boom)		
	Outrigger Lower		Dozer Blade Lower		
	Outrigger Raise		Dozer Blade Raise		

LEVER PATTERN (G PATTERN) (IF EQUIPPED)

⚠ WARNING

- **Before starting operation, carefully check which lever pattern you are going to use.**
- **It is described using the ISO pattern in this manual.**

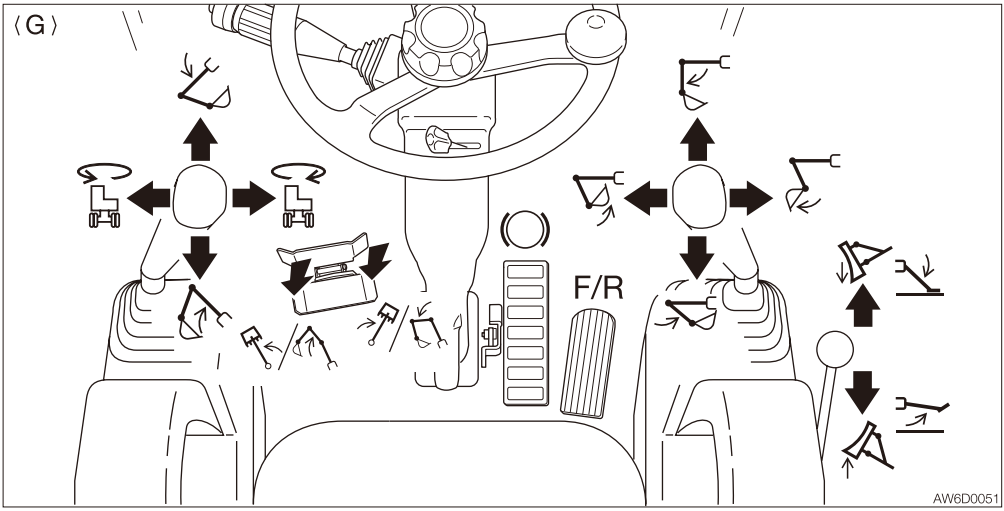

	Brake	F	Forward Travel	R	Reverse Travel
	Boom Lower		Arm Out		
	Boom Raise		Arm In		
	Upperstructure Slew Left		Bucket Load		
	Upperstructure Slew Right		Bucket Dump		
	Boom Swing Left Second Boom Raise (2-piece boom)		Boom Swing Right Second Boom Lower (2-piece boom)		
	Outrigger Lower		Dozer Blade Lower		
	Outrigger Raise		Dozer Blade Raise		

WARMING UP THE MACHINE (HYDRAULIC OIL)

⚠ WARNING

Operating the working equipment without warming up the machine (hydraulic oil) is dangerous, as the working equipment cannot response to controls quickly or may move in unexpected ways, and the safety devices may not operate properly. Be sure to sufficiently warm up the machine.

IMPORTANT: Do not operate the levers too quickly when the hydraulic oil temperature is below 20°C (68°F). The proper hydraulic oil temperature during operation is 50 to 80°C (122 to 176°F). If operations must be performed at lower temperatures, heat up the hydraulic oil to at least 20°C (68°F).

Normal warm-up

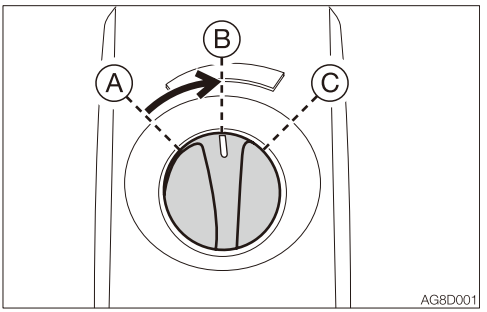

1. Turn the throttle controller to the middle position, and then run the engine at medium speed for about five minutes with no load.

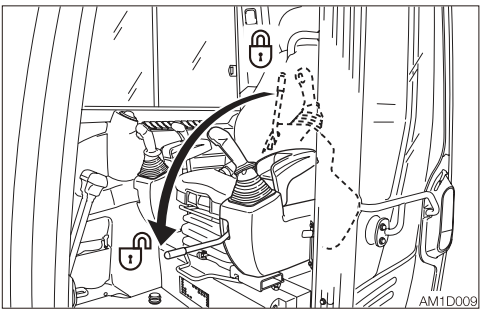

2. Fully lower the safety lock lever to disengage the lock and lift the bucket from the ground.

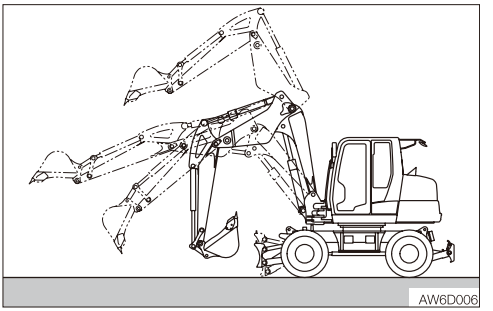

3. Extend and retract each of the cylinders slowly several times with no load.

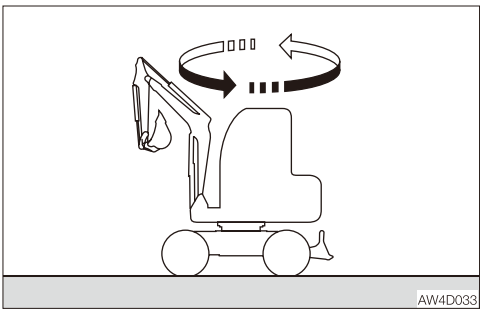

4. Slew slowly to the left and the right several times.

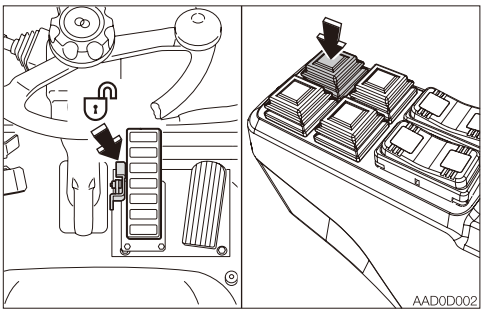

5. Disengage the locks of the brake pedal and the parking brake.

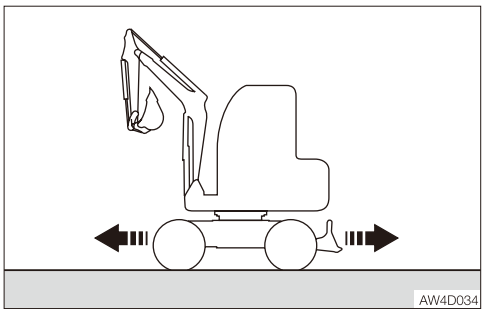

6. Travel slowly forward and in reverse several times.

Warm-up in cold climates

1. Perform the normal warm-up procedure.

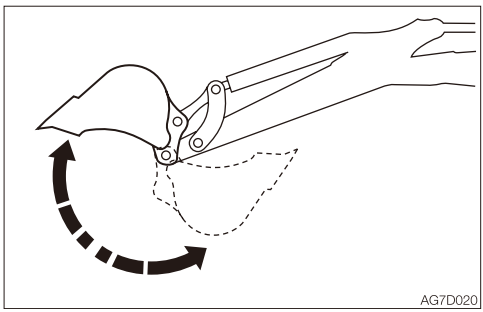

2. Set the bucket cylinder at the stroke end and keep it there.
   Do not keep this condition for more than 30 seconds.
3. Repeat Step 2 until the bucket operating speed becomes normal.

INSPECTION AFTER WARM-UP

After warming up the engine and machine (hydraulic oil), perform the checks and inspections described below, and repair if necessary.

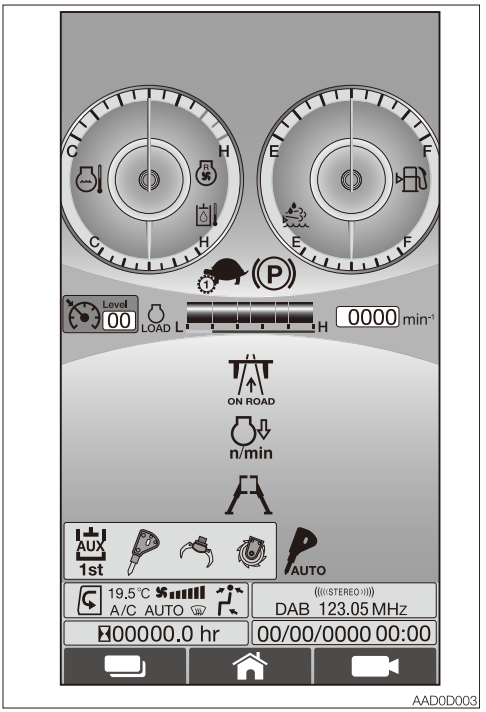

AAD0D003

1. Check that the warning lamps and meters are as follows:
   - Are all warning lamps off?
   - Is the LED on the water temperature gauge seen within the normal range?
   - Is the LED on the hydraulic oil temperature gauge seen within the normal range?
2. Check that there are no irregularities in the exhaust color, sound and vibrations.

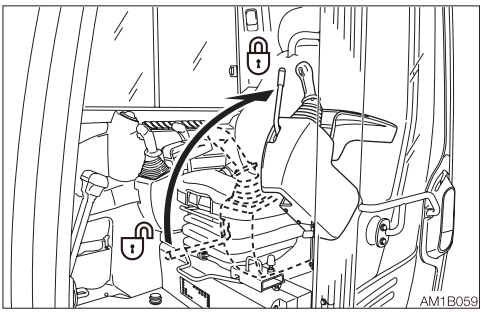
AM1B059

3. Raise the safety lock lever to the locked position, and then check that the operating and travel levers are locked.

TRAVELING THE MACHINE

⚠ WARNING

- **Before traveling, set the machine to the "travel posture".**
  Refer to "Preparing for travel" for further details.
- **When traveling on a road, be sure to lock the working equipment. If any of the controls is accidentally touched when it is unlocked, the machine may suddenly move and cause serious injury or death.**
- **Keep in mind that the steering wheel operation is not possible when the engine is stopped or if the steering pump becomes faulty.**

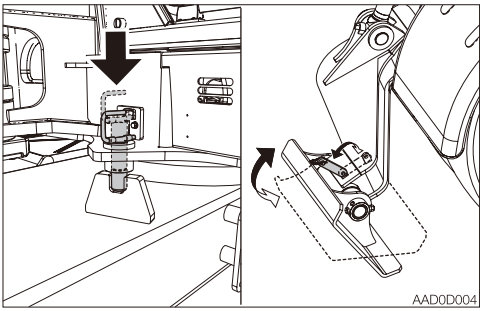
AAD0D004

- When traveling on a public road, be sure to lock slewing with the lock pin. For machines with outriggers, retract the outriggers and install the stoppers.

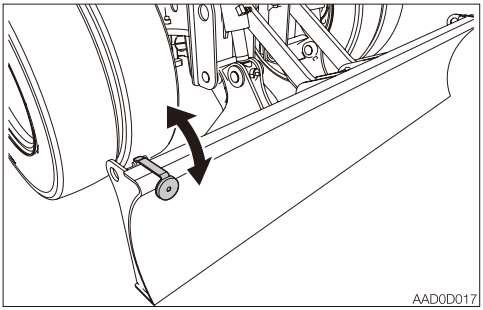

- Before traveling on a road, tilt the reflector. When operating at a job site, raise the reflector to prevent it from being damaged.

(If equipped)

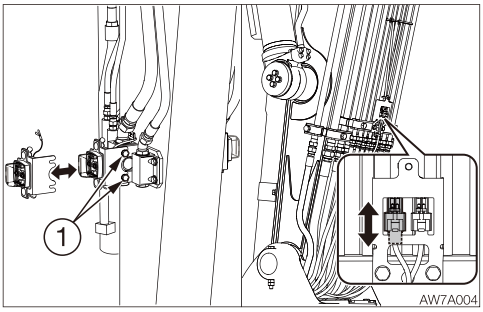

- When traveling during nighttime hours, be sure to install the position lights. Loosen the bolt (1) and install the light. To prevent damage, remove the position lights (including the brackets and harness) before working at the site.
- Never allow anyone to enter the machine's slewing radius and path.
- Signal your intention to move by sounding the horn.

- There is a blind spot in the rear of the machine. Check that the area is safe and clear for yourself. When necessary, use the rear camera.

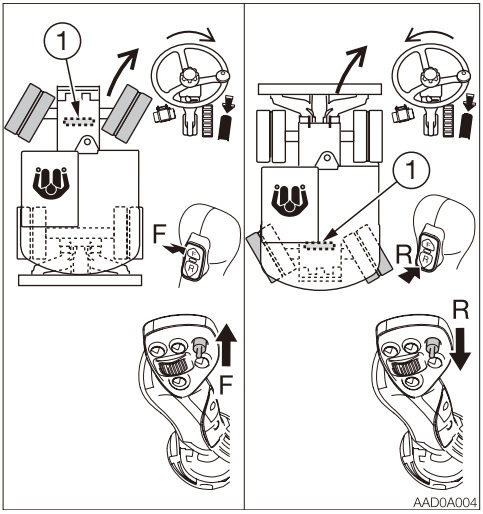

Equipped with outrigger

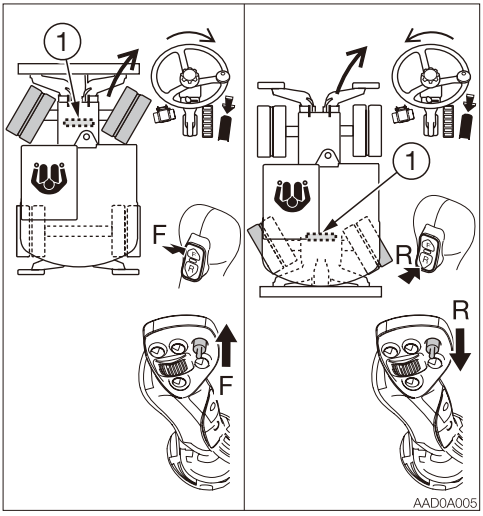

- **Before operating the travel pedal, make sure that the steering device (1) is to the front of the operator's seat. Remember that when the steering device (1) is to the rear of the operator's seat, the steering wheel must be operated in the reverse direction from when it is to the front.**
- **Do not raise the safety lock lever or turn the starter switch to the OFF position while traveling. Doing so is dangerous because it activates the parking brake and causes the machine to stop suddenly.**

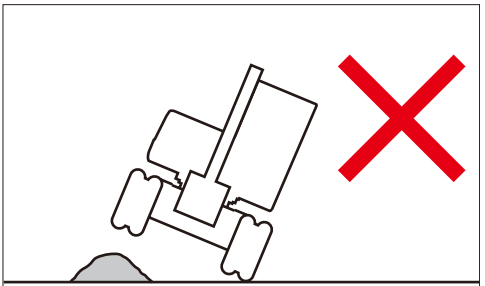
AW4A013

- **Avoid crossing over obstacles whenever possible. If you must do so, keep the hoe attachment close to the ground level and travel slowly. Never cross obstacles which will tilt the machine to an angle of 10° or greater.**
- **Avoid starting, stopping or changing directions abruptly and maintain a proper speed. Otherwise, the working equipment may come in contact with the ground, causing the machine to lose its balance and get damaged or to damage the structures in the surrounding area.**
- **When traveling on the uneven road or sharp slope, turn off the auto-deceleration switch. If the machine is operated on such roads with the switch turned on, the engine speed may increase, causing the machine speed to suddenly increase (machines with the auto-deceleration switch).**
- **When traveling on a road, know and use the signaling devices required on the machine. Use an escort vehicle for road travel when required.**
- **Clear all obstacles from the path of the machine.**
- **When traveling in the 2WS mode, make sure that the 2WS mode rear wheels out of neutral range indicator lamp is off. If the indicator lamp is lit during traveling, the machine could be moved unexpectedly and possibly resulting in an accident.**

Preparing for travel

1. Set the steering device (1) facing forward and to the front of the operator's seat.
2. Fully raise the boom, fully lower the second boom, and then set the arm vertically to rollback the bucket.
3. Fully raise the blade/outriggers (if equipped).
   For machines equipped with outriggers, secure them with turnbuckles.
4. Lock slewing.
5. Tilt the reflector.

Road Travel Posture

- 2-Piece boom (One cylinder)

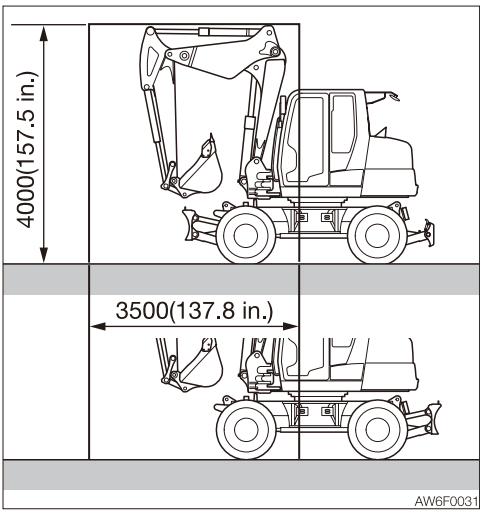

AW6F0031

• 2-Piece boom (Two cylinders)

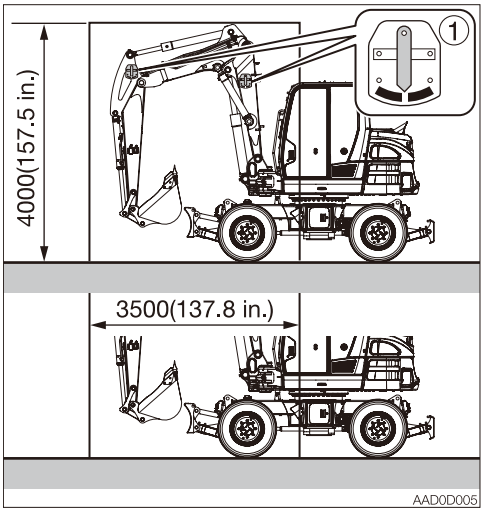

Move the boom and arm to set them so that the position pointers (1) are in the green ranges.

Moving forward and in reverse

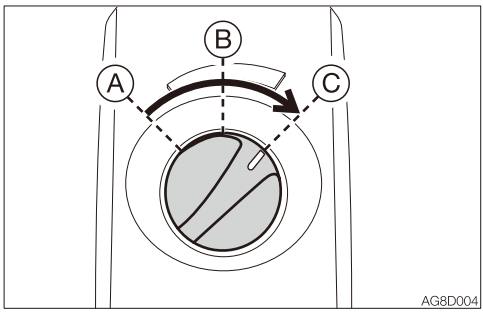

1. Increase the engine speed.

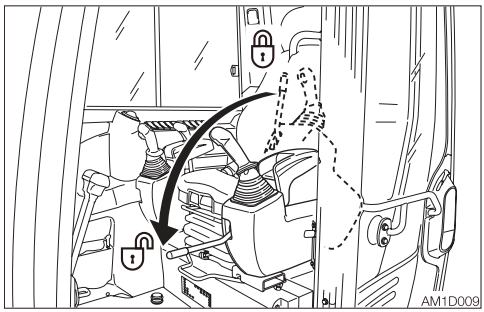

2. Fully lower the safety lock lever to disengage the lock.

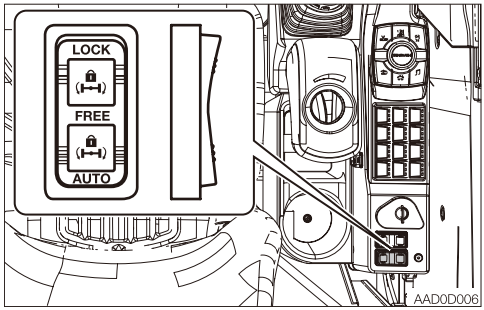

3. Press the ram lock switch to the free position to disengage the ram lock.

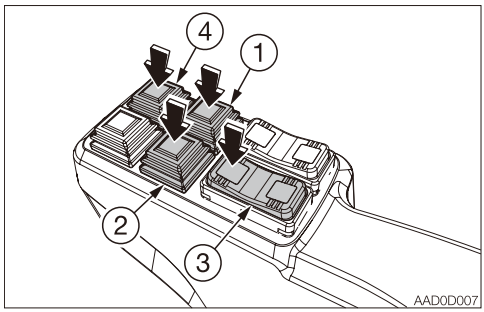

4. Press the travel pedal button (1) while the brake pedal is depressed.
   (When entering the foot accelerator mode)
5. Press the attachment lock button (2) to lock the working equipment.

6. Press the low/high-speed travel switch (3) to choose the proper speed.
7. Press the parking brake switch (4) to disengage the parking brake.
8. Operate the travel pedal as follows.

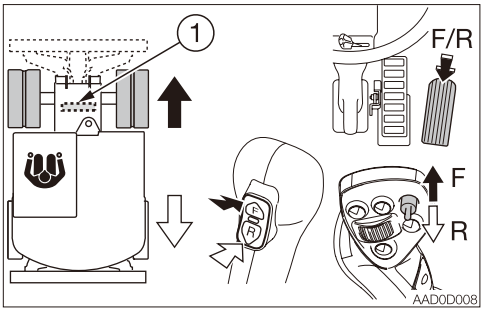

When the steering device (1) is in front of the operator's seat:

➡ To move forward:
Press the travel select button (F) and step on the travel pedal.

⇨ To move in reverse
Press the travel select button (R) and step on the travel pedal.

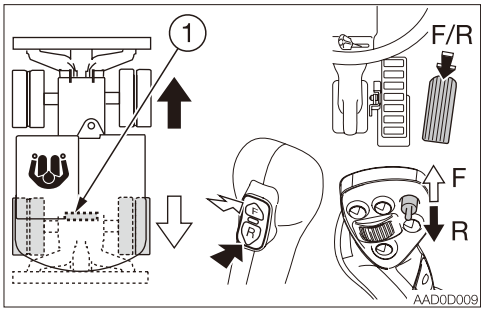

When the steering device (1) is behind the operator's seat:

➡ To move forward:
Press the travel select button (R) and step on the travel pedal.

⇨ To move in reverse:
Press the travel select button (F) and step on the travel pedal.

Turning

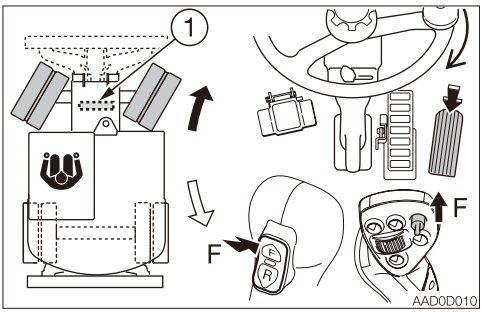

When the steering device (1) is in front of the operator's seat:

➡ To turn forward to the right:
Press the travel select button (F) and turn the steering wheel to the right.

⇨ To turn backward to the right:
Press the travel select button (R) and turn the steering wheel to the right.

To turn to the left, turn the steering wheel to the left.

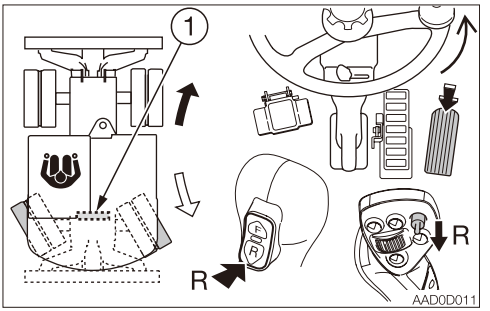

When the steering device (1) is behind the operator's seat:

➡ To turn forward to the right:
Press the travel select button (R) and turn the steering wheel to the left.

⇨ To turn in reverse to the right:
Press the travel select button (F) and turn the steering wheel to the left.

To turn to the left, turn the steering wheel to the right.

STOPPING TRAVEL

⚠ WARNING

- **Park the machine on a flat, rigid and safe ground. Set the parking brake. If you must park on a slope, chock the tracks to block the machine.**
- **If any of the controls is accidentally touched when it is unlocked, the machine may suddenly move and cause serious injury or death.**

⚠ CAUTION

Never stop running the machine suddenly except in emergency. Stop in good time, if possible.

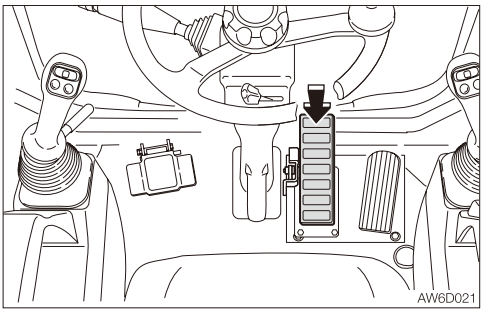

1. Slowly step on the brake pedal to stop the machine.
2. Depress the brake pedal all the way down to lock it.

OPERATING THE WORKING EQUIPMENT

⚠ WARNING

- **Before starting operation, carefully check which lever pattern you are going to use.**
- **It is described using the ISO pattern in this manual.**

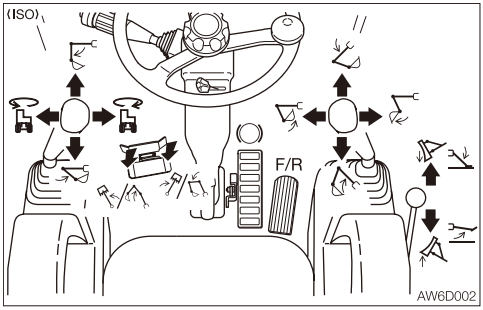

Use the right operating lever to operate the boom and bucket.
Use the left operating lever to operate the arm and slewing.
Return the operating levers to the neutral position to stop the working equipment.

1. Release the slew lock pin.
2. Depress the brake pedal all the way down to engage the pedal lock.
3. Press the ram lock switch to lock the suspension of the front axle.
4. Lower the dozer blade to the ground.
5. Lower the safety lock lever to the unlock position.

Slewing

⚠ WARNING

Check the surrounding area for safety before slewing.

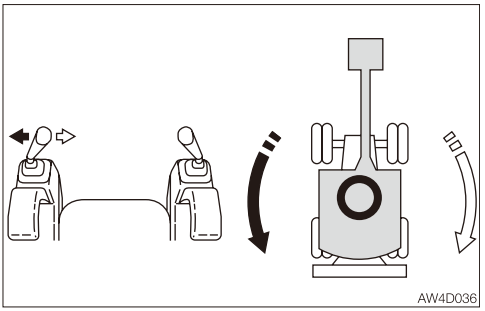

➡ Upperstructure slew left:
Tilt the left operating lever to the left.
⇨ Upperstructure slew right:
Tilt the left operating lever to the right.

Operating the boom

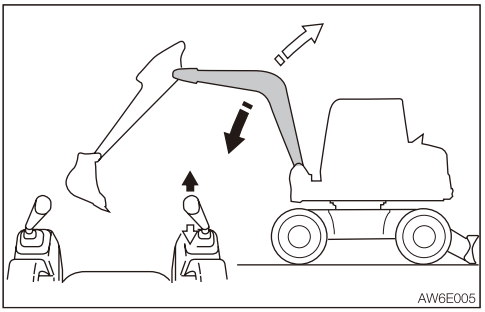

➡ Boom lower:
Tilt the right operating lever forward.
⇨ Boom raise:
Tilt the right operating lever backward.

Operating the arm

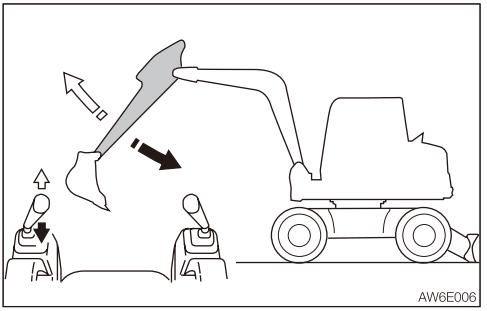

➡ Arm in:
Tilt the left operating lever backward.
⇨ Arm out:
Tilt the left operating lever forward.

Operating the bucket

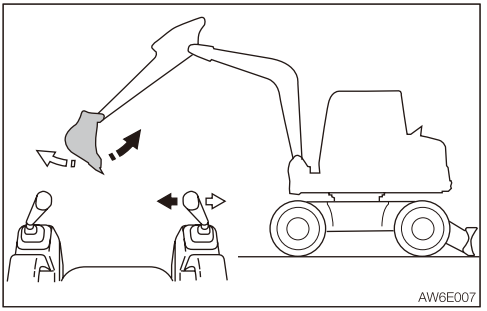

➡ Bucket load:
Tilt the right operating lever to the left.
⇨ Bucket dump:
Tilt the right operating lever to the right.

Operating the boom swing

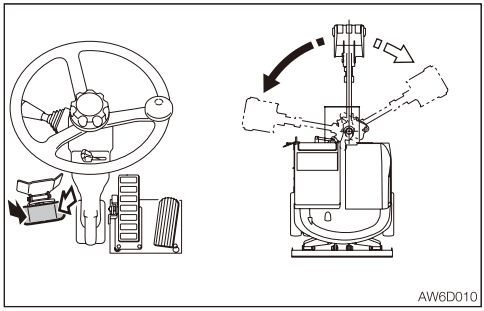

➡ Boom swing left:
Step on the left side of the pedal.

⇨ Boom swing right:
Step on the right side of the pedal.

Operating the second boom (If equipped)

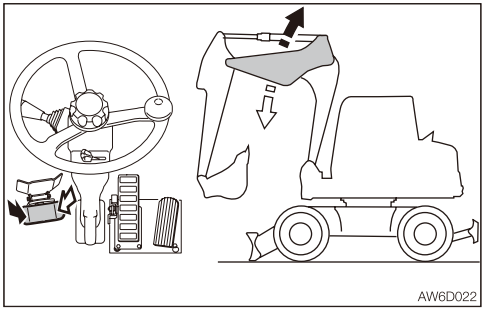

Select the second boom with the swing/ second boom select switch.

➡ Second boom raise:
Step on the left side of the pedal.

⇨ Second boom lower:
Step on the right side of the pedal.

Operating the dozer blade

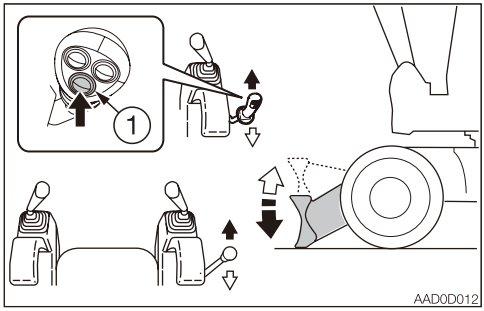

For machines with outriggers, select the blade operation with the blade/outrigger select switch (1).

➡ Dozer blade lower:
Tilt the blade lever forward.

⇨ Dozer blade raise:
Tilt the blade lever backward.

Operating the Outrigger (If equipped)

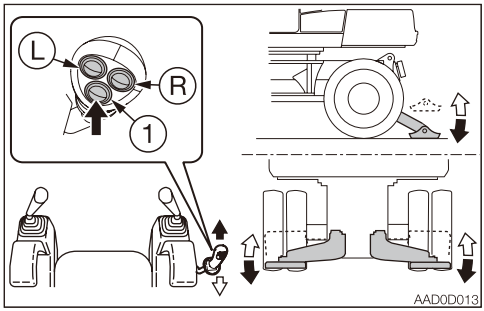

Select the outrigger operation with the blade/ outrigger select switch (1).

➡ Outrigger lower:
Tilt the blade lever forward.

⇨ Outrigger raise:
Tilt the blade lever backward.

- Outrigger switch L:
  Operating only the left side outrigger
- Outrigger switch R:
  Operating only the right side outrigger

OPERATING PROCEDURES

PROHIBITED OPERATIONS

⚠ WARNING

- **Do not operate on bedrock (hard or soft).**
- **Do not slew/swing while traveling. If you must operate the hoe attachment while traveling, operate at speeds slow enough so you have complete control at all times.**

Do not perform demolition or leveling using slew force

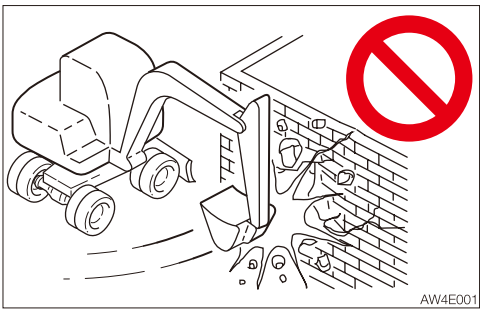

Do not demolish walls or level ground using slew force. Also, do not dig the bucket teeth into the ground during slewing. Doing so will damage the hoe attachment.

Do not dig while traveling

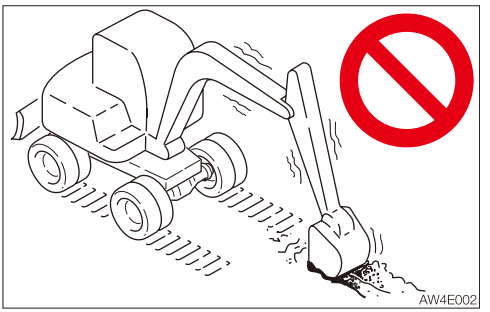

Do not dig the bucket into the ground and use the traveling force to dig.

Be gentle when using the hydraulic cylinder

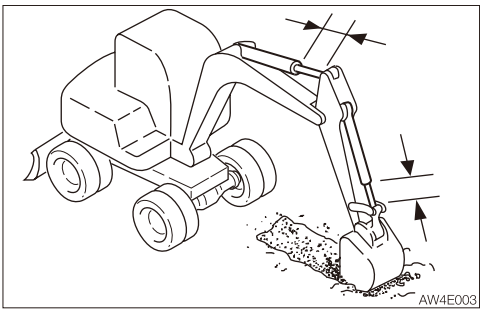

Do not extend the hydraulic cylinders to the stroke ends. Operate them with leeway.

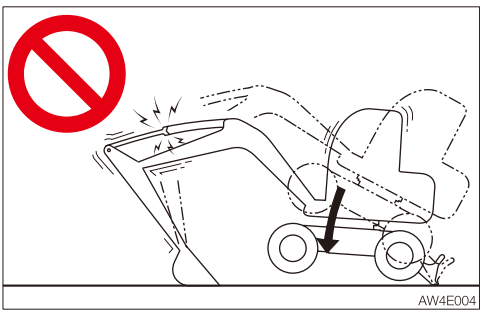

Do not support the machine body with the hoe attachment when the body is lowering with the arm cylinder fully extended. Doing so concentrates the load on the arm cylinder and could damage the arm cylinder.

Do not drive piles with the bucket or dig by banging the bucket

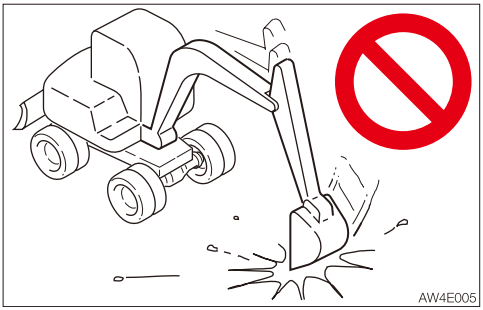

Doing so will shorten the service life of the hoe attachment. Use the hydraulic force to dig.

Do not perform operations using the machine's dropping force

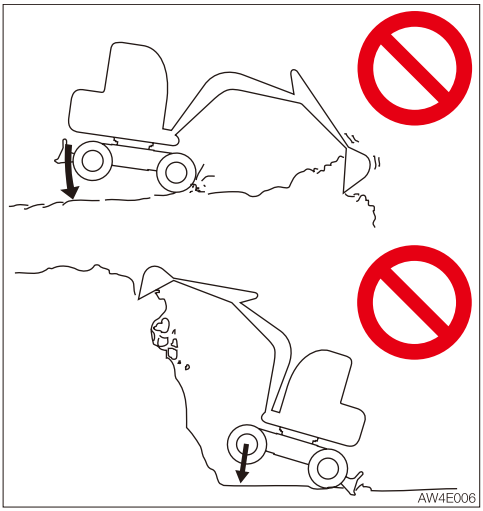

Putting excessive strain on the machine will shorten its service life. When digging, use the hydraulic force of the cylinders and the shallow and long strokes.

Digging bedrock

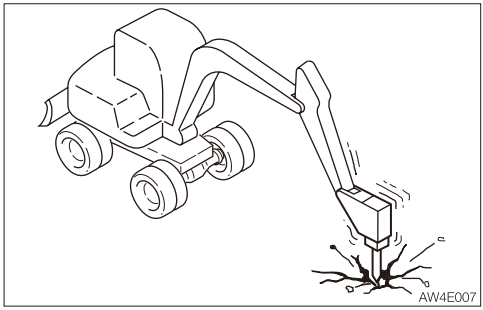

For hard base rock, break the rock up into small pieces with a breaker, etc., before digging. This prevents damage to the machine and is thus more economical in the end.

Caution on exposing the dozer blade to shocks

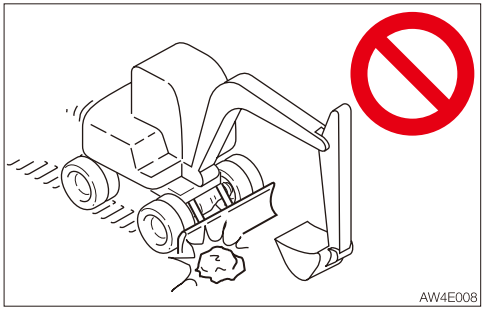

Hitting the dozer blade against rocks, etc., could damage the dozer blade or the blade cylinder.

Caution on folding the hoe attachment

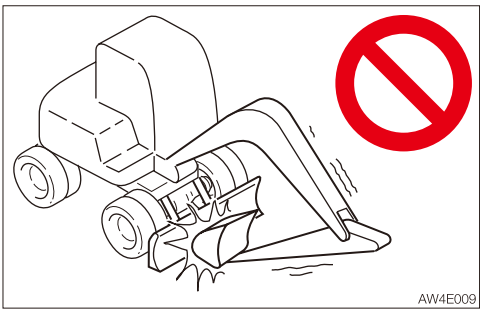

Be careful not to let the bucket hit the dozer blade when the hoe attachment is being folded.

Be careful about the hoe attachment interference

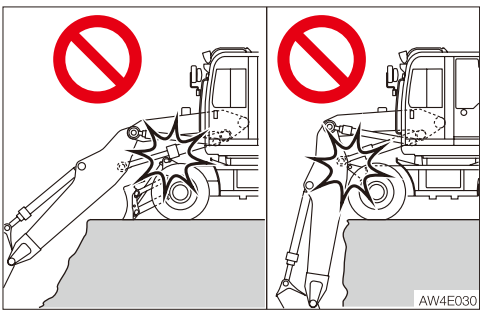

When lowering the hoe attachment, be careful not to let it hit the undercarriage or dozer blade. Also, make sure that the boom cylinder hose does not contact the chassis.

Do not support the machine with one side of the blade.

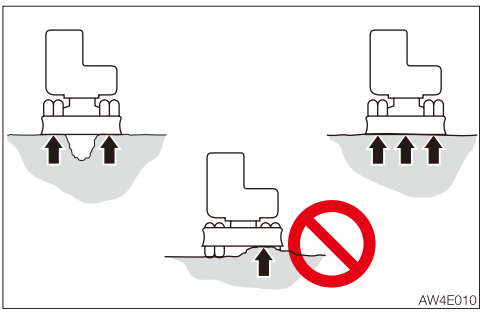

When using the dozer blade to stabilize or raise the machine, lower the both ends of the blade to the ground.

Pay attention to the dozer blade when digging

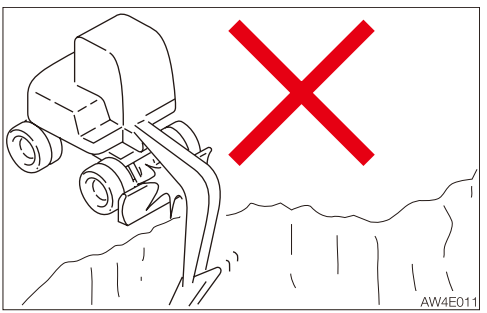

When digging deeply with the dozer blade positioned at the front, be careful that the boom cylinder and bucket do not hit the dozer blade.
Operate with the dozer blade at the rear whenever possible.

Caution on digging down with the dozer blade

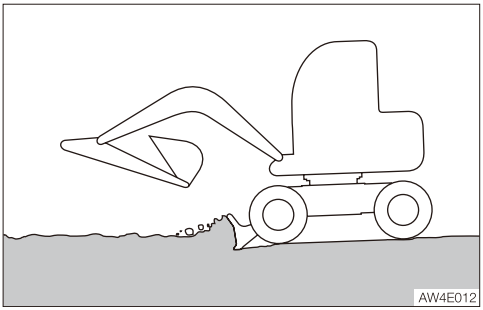

This dozer blade is designed for simple earth pushing. Do not dig down deeply with the dozer blade. Doing so could damage the dozer blade and undercarriage.

Avoid operations that may cause injury or failure

Never perform the following operations. It may cause personal injury or failure.

- Braking operation during acceleration
- Rotate one side of tires while the other stops.
- Travel operation for 1 hour or longer while the steering wheel is steered

PRECAUTIONS FOR OPERATION

Precautions on traveling

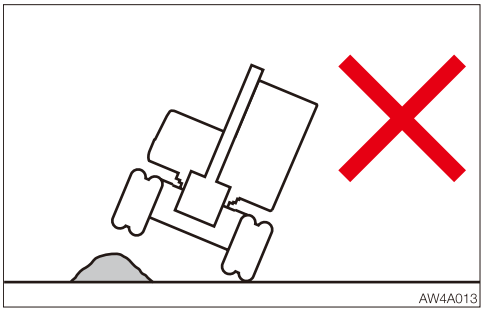

Traveling over obstacles (rocks, stumps, etc.) may put a great load on the machine body and may cause damage to it. Avoid crossing over obstacles whenever possible. If you must do so, keep the hoe attachment near the ground, travel at a low speed, and go over the obstacle at the center of the tires.

Precautions when traveling at high speed

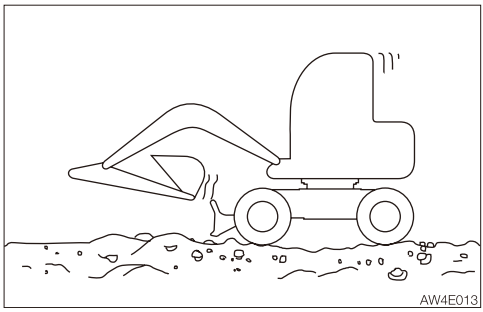

- On uneven ground, maintain the low speed and avoid starting, stopping or changing directions abruptly.
- When traveling at high speed, do so with the steering device set at the front.

PRECAUTIONS WHEN TRAVELING ON SLOPES

⚠ WARNING

- Never travel on slopes that are too steep for the machine to maintain its stability (maximum gradeability: 35°, lateral tipping angle: 15°). Note that in reality, the machine's stability becomes lower than the above values depending on the working condition.
- When climbing a hill, keep the operator's seat facing the hillside. When descending a hill, keep the operator's seat facing downhill. In either case, travel must be done while paying attention to the ground in front of the machine.
- When traveling on slopes, lower the bucket to a height of 20 to 30 cm (8 to 12 in.) above the ground. When climbing a steep slope, extend the hoe attachment to the front. In emergencies, lower the bucket to the ground and stop the machine.
- When traveling on slopes or grades, travel slowly in low gear. When descending a slope, slow down the engine speed.
- Do not travel at speeds of over 20 km/h (12.4 mph) on long down slopes. Release the travel pedal from time to time to protect the travel motor and ensure travel stability.
- Do not travel downhill in reverse.

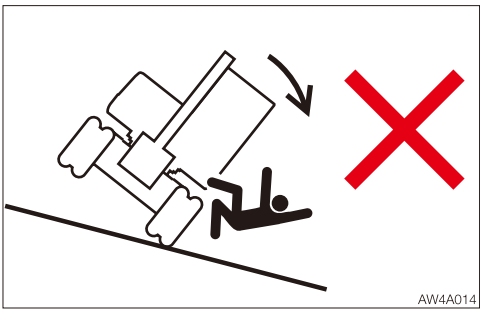

- Do not change directions on slopes or traverse slopes. Go down to a flat surface, and then take an alternative path.
- The machine may slip sideways even on a slight slope if it is covered with grass or fallen leaves, or when traveling on wet meta plates or frozen surfaces. Do not allow the machine to position sideways to a slope.
- If the machine is stalled on the slope, return each operating lever to the neutral position before restarting the engine.

Traveling posture on slopes

Climbing slopes

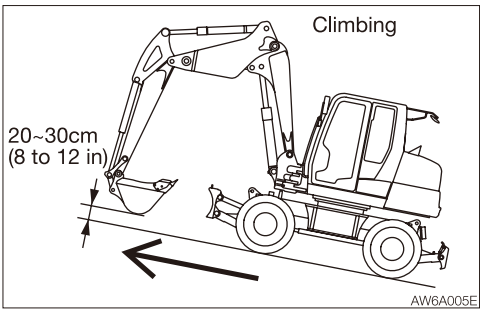

When climbing slopes of 15° or more, maintain the machine posture as shown in the figure above.

Descending slopes

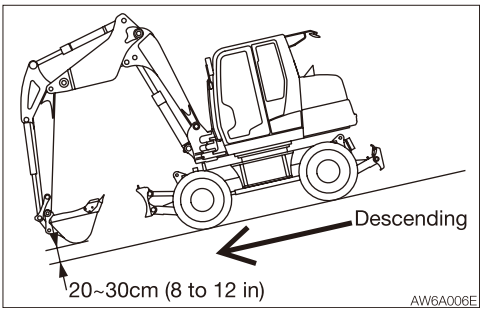

When descending slopes of 15° or more, slow down the engine speed to travel using the low-speed travel gear and maintain the machine posture as shown in the figure above.

Braking when descending slopes

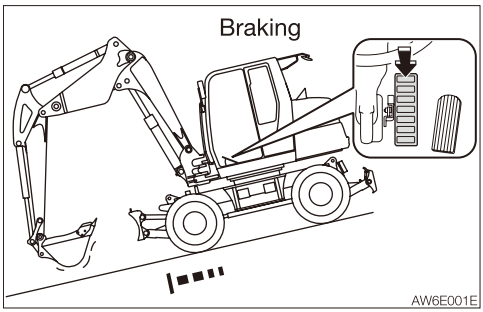

When descending slopes, apply the brake earlier than usual.

If the tire slips

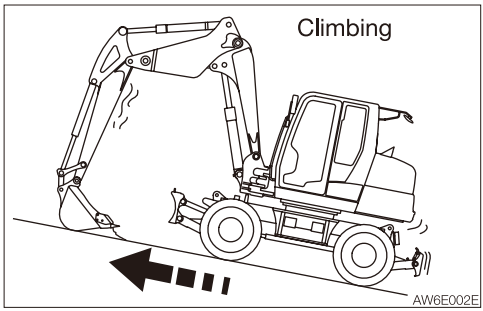

If it is impossible to climb the slope due to tire slippage, use the pulling force of the arm to climb the slope.

If the engine stops

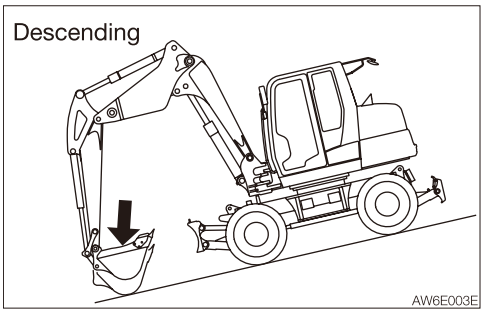

If the engine stops when descending a slope, depress the brake pedal to stop the machine, use the bucket to anchor the machine to the ground, and then start the engine.

Do not open/close the door while traveling on slopes

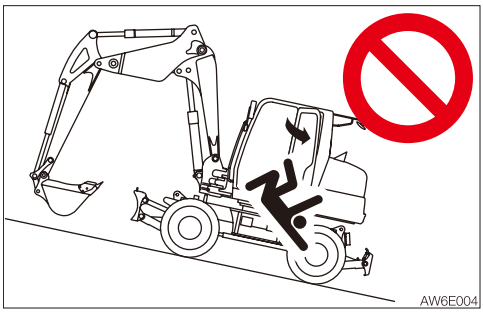

Opening/closing the door while traveling on slopes is dangerous, as the force required to open and close the door changes abruptly. Always keep the door closed when traveling on slopes.

GETTING OUT OF MUD

If the machine gets stuck in mud, use the procedure below to get it out.

If tires on one side are stuck

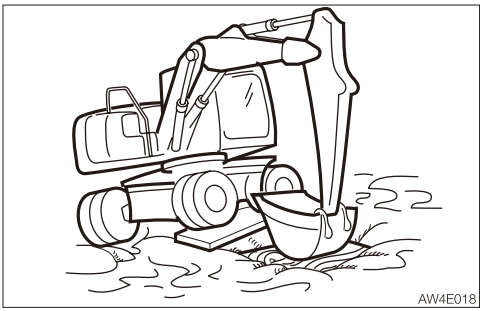

1. Slew the bucket to the side of the tires being stuck.
2. Set the arm and boom to an angle of 90 to 110°.
3. Press the bottom of the bucket (not the teeth) against the ground to raise the stuck tires.
4. Place a plank or the like under the raised tires.
5. Lift the bucket and slowly move the machine out of the mud.

If tires on both sides are stuck

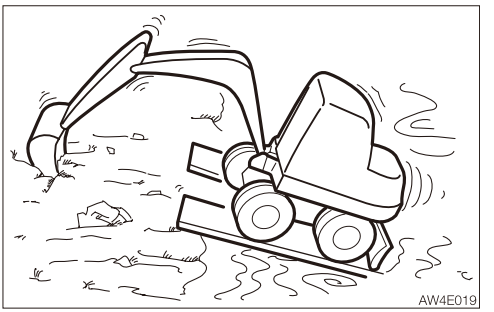

1. Perform the steps 1 to 4 above for both tires.
2. Dig the bucket into the ground in front of the machine.
3. Pull the arm while traveling forward to slowly move the machine out.

OPERATIONS POSSIBLE WITH THIS MACHINE

Excavating

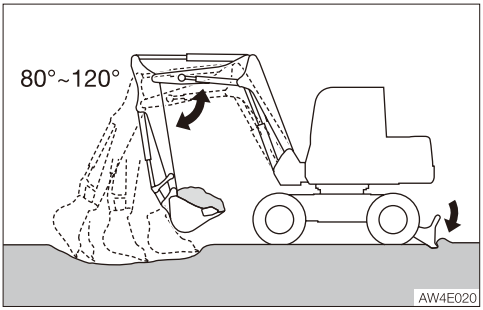

1. Set the dozer blade on the side opposite to the side you want to dig on.
2. Use the arm and bucket and dig with shallow, long strokes. The maximum digging force can be obtained when the boom and arm angle is 80 to 120°. Use this angle for effective digging.

Digging ditches

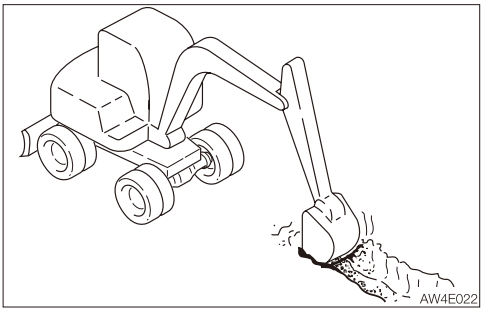

Install a bucket suited for digging ditches and set the tires parallel to the ditch to be dug for greater efficiency.
When digging wide ditches, dig the sides first, and then dig the center.

Loading

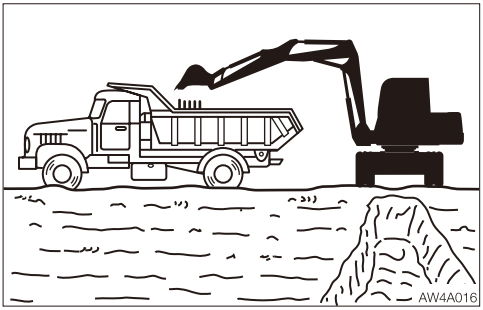

When loading dirt onto a truck bed, load from the back of the truck, as it is easier and able to load more load than doing it from the front.
Also, use a small slewing angle for greater efficiency.

Leveling

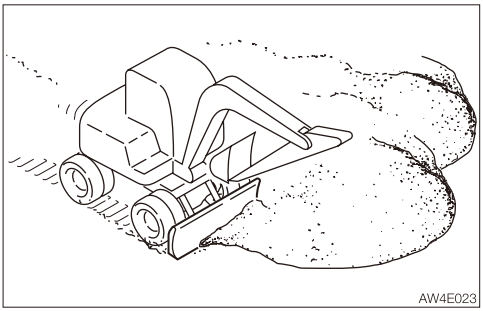

1. Bring the hoe attachment close to the body.
2. Gradually remove the dirt from the side of the mound.
3. Once the mound is low, remove the dirt from the top. If the load becomes too heavy for the machine body, adjust by raising or lowering the dozer blade.

PARKING THE MACHINE

PARKING

⚠ WARNING

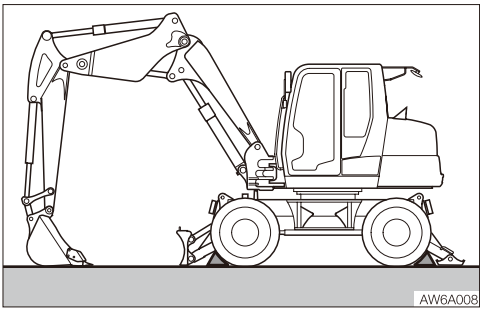

- **Park the machine on a flat, rigid and safe ground. Set the parking brake, brake pedal lock and wheel stoppers.**

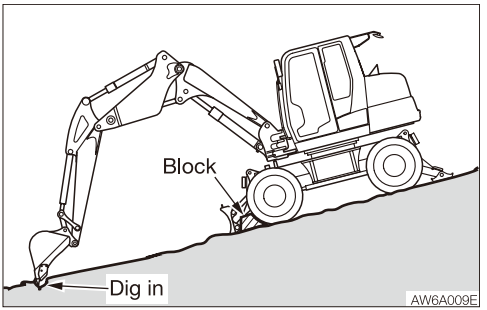

If you must park on a slope, chock the wheels to block the machine.
- **When parking on a street, use barriers, caution signs, lights, etc., so that the machine can easily be seen even at night to avoid collision with other vehicles.**
- **Before leaving the operator's seat, safely park the machine by referring to "Parking procedures" below.**

Parking procedures

1. Slowly step on the brake pedal to stop the machine, and then further depress the pedal down to lock it.
2. Press the deceleration button to idle the engine at low speed.
3. Lower the bucket and the dozer blade to the ground.
   When replacing the attachment or performing the inspection and maintenance on it, follow the procedure "Releasing the residual pressure from the working equipment circuit" described below, as necessary.
4. Raise the safety lock lever to the lock position.
5. Stop the engine and remove the starter key.
   Refer to "Stopping the engine" on page 3-6.
6. Lock the cab, tool box and covers, take the key with you and store it in a specified place.

Releasing the residual pressure from the working equipment circuit

Perform the operation of releasing the residual pressure within 30 minutes after the engine comes to a complete stop.

1. Stop the engine.
2. Turn the starter switch to the ON position.
3. Lower the safety lock lever to the unlock position.
4. Release the lock of the attachment lock button.
5. Move all the control levers, pedals and auxiliary hydraulic switches several times in all directions to release the residual pressure in the working equipment circuit.

INSPECTION AND CHECKS AFTER STOPPING THE ENGINE

1. Check for oil or water leak and inspect the working equipment, covers and undercarriage. If any irregularities are found, repair.
2. Fill up the fuel tank.
   Refer to “Inspecting the fuel level” on page 5-26.
3. Remove any paper scraps or dirt from the engine room.
4. Remove any mud from the undercarriage.

Locking
Be sure to lock the following places:

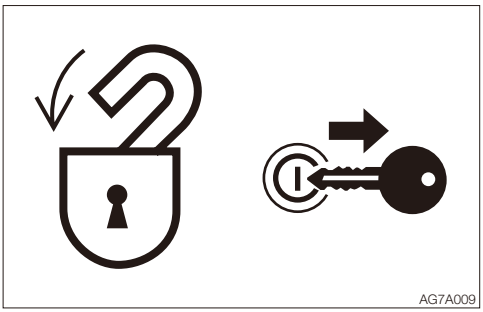

- Cab door
- Engine hood
- Covers
- Tool box

HANDLING IN COLD CLIMATES

PREPARING FOR COLD CLIMATES

Starting engine in cold climates is not easy, and it becomes more difficult if the coolant freezes. Prepare for cold-climate problems as follows.

Replacing the fuel and lubricant
Replace the hydraulic oil, engine oil and fuel with those intended for cold climates.
Refer to “Fuel and lubricant table” on page 5-4.

Engine coolant

⚠ WARNING

The engine coolant is combustible. Keep away from flame.
Use long-life coolant (antifreeze) and tap water for the engine coolant.

Note: New machines are delivered with JIS Type 2 long-life coolant (antifreeze) at a concentration of 50%.
Refer to “Fuel and lubricant table” on page 5-4.

Battery
As the temperature drops, the battery performance decreases.
Inspect the battery. If it is discharging, contact a Takeuchi service agent to have the battery recharged.
Refer to “Inspecting the battery” on page 5-45.

CAUTIONS AFTER OPERATIONS

Observe the following cautions to prevent mud, water, or the undercarriage from freezing and making it impossible for the machine to move.

- Remove all mud and water from the machine body. In particular, wipe the hydraulic cylinder rod clean to prevent damage to the seal caused by mud or dirt on the rod surface getting inside the seal together with drops of water.
- Park the machine on hard and dry ground. If this is impossible, park the machine on a wooden board placed on ground.
- Drain any water in the fuel tank to prevent it from freezing.
  Refer to “Draining the water from the fuel tank” on page 5-44.
- As the battery capacity drops markedly in low temperatures, cover the battery or remove it from the machine and keep it in a warm place.
  If the electrolyte level is low, add distilled water in the morning before beginning work. To prevent the battery electrolyte from freezing in the night, do not add water after the day’s work.

AFTER THE COLD CLIMATE

When the climate becomes warmer, do as follows:

- Replace the fuel and oil for all parts with those specified in the “Fuel and lubricant table”.
  Refer to “Fuel and lubricant table” on page 5-4.
- If a coolant of “one season type” is used, drain the cooling system completely, clean out the inside of the cooling system thoroughly, and fill with tap water.
  Refer to “Replacing the engine cooling system” on page 5-65.

HANDLING TIRES

Tires are weak in strength due to the material they are made of. Be sure to observe the prohibitions and precautions below to prevent the tires from being damaged or coming off.

PROHIBITIONS

Do not travel or operate the machine in the following places:

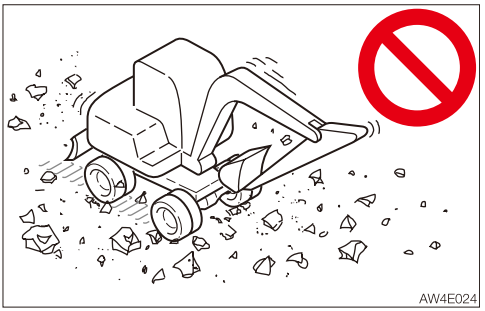
AW4E024

- Traveling or slewing on crushed rock, extremely rough hard rock, steel beams, scrap iron or near the edges of steel plates will cause damage to the tires.

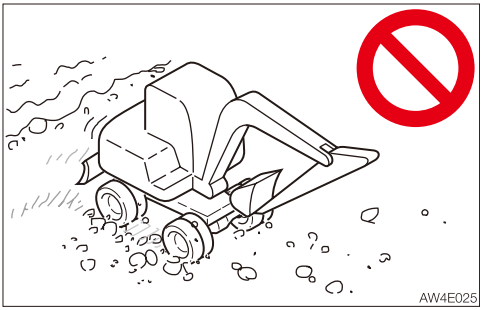
AW4E025

- Traveling on riverbeds or places where there are many boulders may cause the stones to get caught and damage the tires or make the tires come off.
- Do not use the machine on the seashore. The salt may corrode the metal wheels.

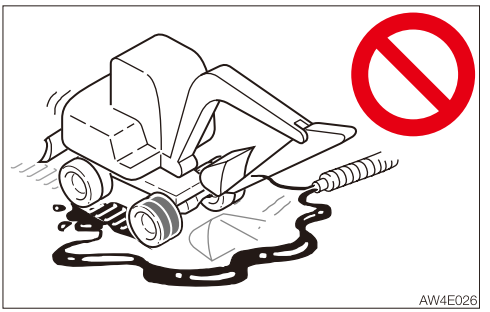
AW4E026

- Do not let fuel, oil, salt or chemical solvents get on the tires. These substances may corrode the metal wheels and tires, resulting in rust or peeling. If you find any of these on the tire, immediately wipe if off and clean the tire with water.

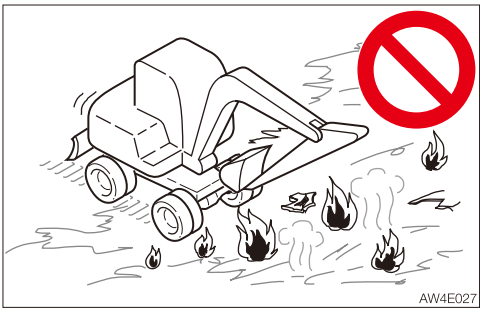
AW4E027

- The treads will show irregular wear or will be damaged, if the machine travels on recently paved asphalt road, ground around a bonfire or hot iron sheets under the blazing sun.
- Do not move earth in places where the tires may slip. Doing so may speed up tread wear.

PRECAUTIONS

Observe the following precautions when operating the machine:

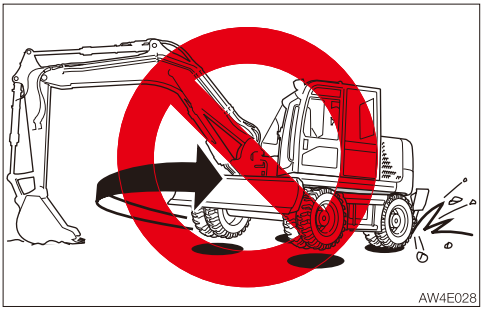

- Do not turn the undercarriage with the front of the machine body lifted using the hoe attachment (the upperstructure is not turned). Doing so will twist the tires with the load concentrated on a single point on the tire, causing rapid damage to the tires.
- Avoid changing courses abruptly whenever possible. Doing so may wear or damage the tires.
- Avoid falling of the machine that may expose the tires to strong shocks.
- Salt, potassium chloride, ammonium sulfate, potassium sulfate and triple superphosphate can damage the tires. If any of these substances gets on the tires, wash if off thoroughly with water.
- Do not let the sides of the tires rub against concrete or walls.
- Do not let the bucket hit the tires and damage them.
- Be especially careful on snowy or frozen surfaces in winter, as the tires easily slip in such conditions.
- Use tires at temperatures between –25°C to +55°C (–14°F to 131°F).
- When storing the tires for long periods of time (three months or more), do so indoors in a place not exposed to direct sunlight or rain.

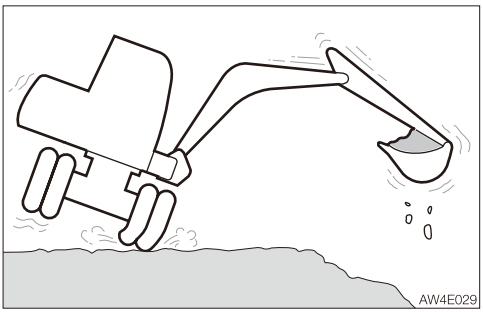

- Tires are not very stable. Be very careful when slewing sideways.

STANDSTILL REGENERATION

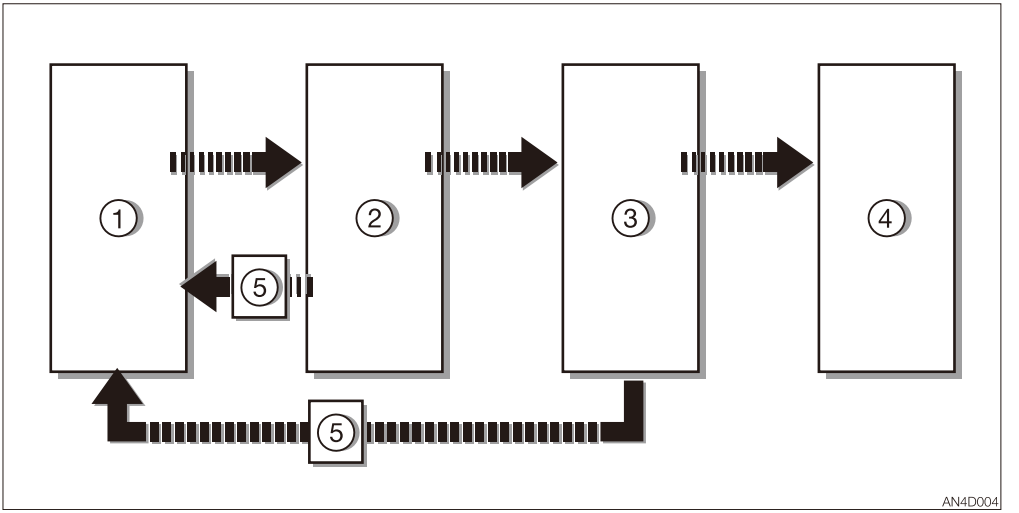

Mode		Indicator	Alarm	Engine status	Mode shifting condition
(1)	Normal mode	Off	Off	• Normal	• Detection of crystallization • Detection of soot accumulation • 1050 hours
(2)	Standstill regeneration demand	Flashing	Off	• Normal	• 5 hours • Standstill regeneration process
(3)	Standstill regeneration demand (warning level)	Flashing	On	• RPM is normal. • Torque is limited to 75%.	• 25 hours • Standstill regeneration process
(4)	Engine stop request	Flashing	On	• Low idle	• Repair
(5)	Standstill regeneration in process	On	Off	• Automatic control	• 35 to 40 minutes (average)



- In the SCR system, the indicator (A) starts flashing when the crystallization or soot accumulation in the DPF is detected or when the machine is used for 1050 hours without performing the standstill regeneration ((1) → (2)).
  Perform the standstill regeneration as soon as possible.
- The indicator (A) changes from flashing to solid when the standstill regeneration is started and goes off when the regeneration is ended ((2) → (5) → (1)).
  For details on starting the standstill regeneration, refer to “Standstill regeneration/Stop switch” on page 2-76.

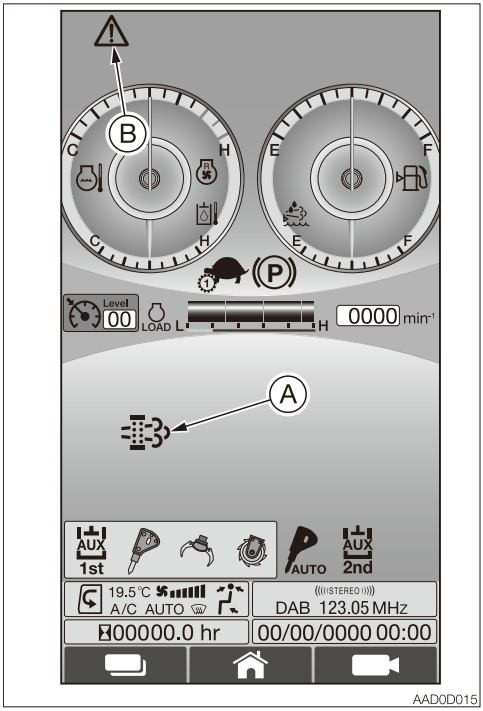

- While in the mode (2), the indicator (A) starts rapidly flashing and the alarm starts sounding when the machine is used for 5 hours without performing the standstill regeneration. The indicator (B) also starts flashing and the engine torque is limited to 75% of the normal operation ((2) → (3)).
  Perform the standstill regeneration as soon as possible.
- The indicator (A) changes from flashing to solid when the standstill regeneration is started and goes off when the regeneration is ended ((3) → (5) → (1)).
  For details on starting the standstill regeneration, refer to “Standstill regeneration/Stop switch” on page 2-76.



- While in the mode (3), the engine RPM drops to low idle and the indicator (C) starts flashing when the machine is used for 25 hours without performing the standstill regeneration ((3) → (4)).
  The standstill regeneration using the switch becomes disabled. In this case, ask your sales or service dealer for repair.

HANDLING THE ENGINE

PROHIBITIONS

Do not modify the exhaust gas control system. Any usages other than described in this manual are prohibited.

CAUTIONS

- To maintain the engine's exhaust performance, operate or use the machine and perform inspection and maintenance by following this manual.
  Incorrectly operating or using the machine or performing inspection and maintenance could cause machine failure.
- If the exhaust gas control system is not properly functioning, the ECM error warning lamp flashes and an error code appears.
  If an error code appears, immediately repair the fault detected, or consult your sales or service dealer for help.
- If the ECM error warning is ignored, the operator inducement system activates.
  Since the system limits the engine output, there is a possibility that machine becomes unable to move.

DIESEL FUEL

The diesel fuel used must meet the requirements specified in the region where the machine is operated.
Refer to "Service data" on page 5-4.

TRANSPORT



LOADING AND UNLOADING

⚠ WARNING

The machine may roll or tip over or fall while being loaded or unloaded. Take the following precautions:

- **Select a firm, level surface and keep sufficient distance from road shoulders.**
- **Secure ramps of adequate strength and size to the truck bed. The slope of the ramps must not exceed 15°.**
- **Never use the working equipment to load or unload the machine. Doing so may result in tipping over or falling down of the machine.**
- **Keep the truck bed and loading ramps clean of oil, soil, ice, snow and other materials to prevent the machine from sliding sideways. Clean the tires too.**
- **Chock the transporter wheels to prevent movement.**
- **When traveling on the uneven road or sharp slope, turn off the auto-deceleration switch. If the machine is operated on such roads with the switch turned on, the engine speed may increase, causing the machine speed to suddenly increase (machines with the auto-deceleration switch).**
- **When being loaded or unloaded, travel slowly in low gear by following the signal from the signal person.**
- **Never change courses on the ramp.**
- **Do not slew on the ramp. The machine may tip over.**
- **When slewing on the truck bed, do it slowly as the footing should be unstable.**

When loading or unloading the machine, be sure to use ramps or a platform and follow the procedure below.

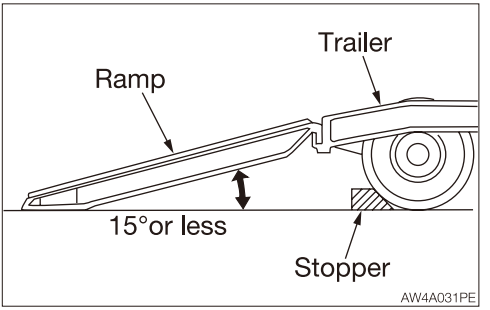

1. Set the parking brake on the transporter and chock the wheels.
2. Fix the ramps securely to the truck bed. The slope of the ramps must not exceed 15°.
3. Align the center of the truck bed with the center of the machine, and of the ramp with the center of the tires.
4. Make sure the dozer blade does not hit the ramps.
5. Lower the hoe attachment as far as possible without letting it touch the transporter.
6. Decrease the engine speed.

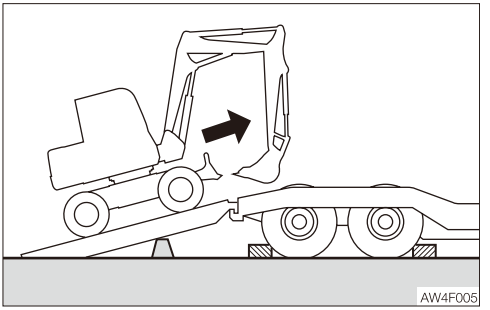

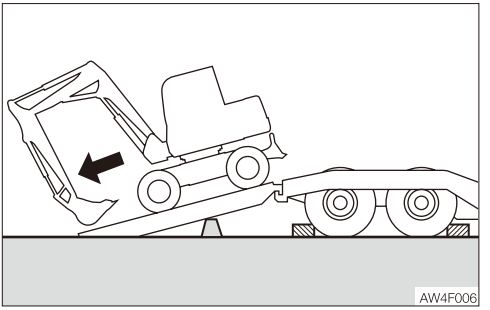

7. Drive the machine straight toward the ramps and go up or down the ramps slowly in low gear, by following the signal from the signal person.
8. Load the machine at the specified position on the transporter.
   Refer to “Transporting posture” on page 4-6.

HOISTING THE MACHINE

⚠ WARNING

- **Know and use the correct crane signals.**
- **Check the hoisting point for damage or deformation on a daily basis and replace the parts if damage or deformation is found.**
- **Check the hoisting equipment for damaged or missing parts on a daily basis and replace as necessary.**
- **When hoisting, use a wire rope capable of lifting the machine mass.**
- **Hoist the machine in only as manner described in the procedure below. Do not do it in any other manner. Doing so is dangerous as it may result in the machine losing its balance.**
- **Do not hoist the machine with an operator on it.**
- **When hoisting, hoist slowly so that the machine does not tip.**
- **Keep everyone out of the area when hoisting. Do not move the machine over the heads of the persons.**

IMPORTANT: This hoisting method applies to machines with standard specifications. The center of gravity differs according to the attachments and optional equipment installed.
Contact your Takeuchi service agent for details.

Hoisting

1. Keep the machine configuration as shown in the figure on the right.
   Set the upperstructure parallel to the track frame.
2. Raise the safety lock lever to the locked position.
3. Stop the engine, remove the starter key and get off the machine.
4. Install the wire ropes as shown in the figure on the right.
   Install the wire ropes and hoisting attachment without letting them touch the machine body.
5. Hoist the machine slowly until it leaves the ground.
6. Stop hoisting until the machine becomes stable, and then start hoisting the machine slowly again.

<Hoisting posture>

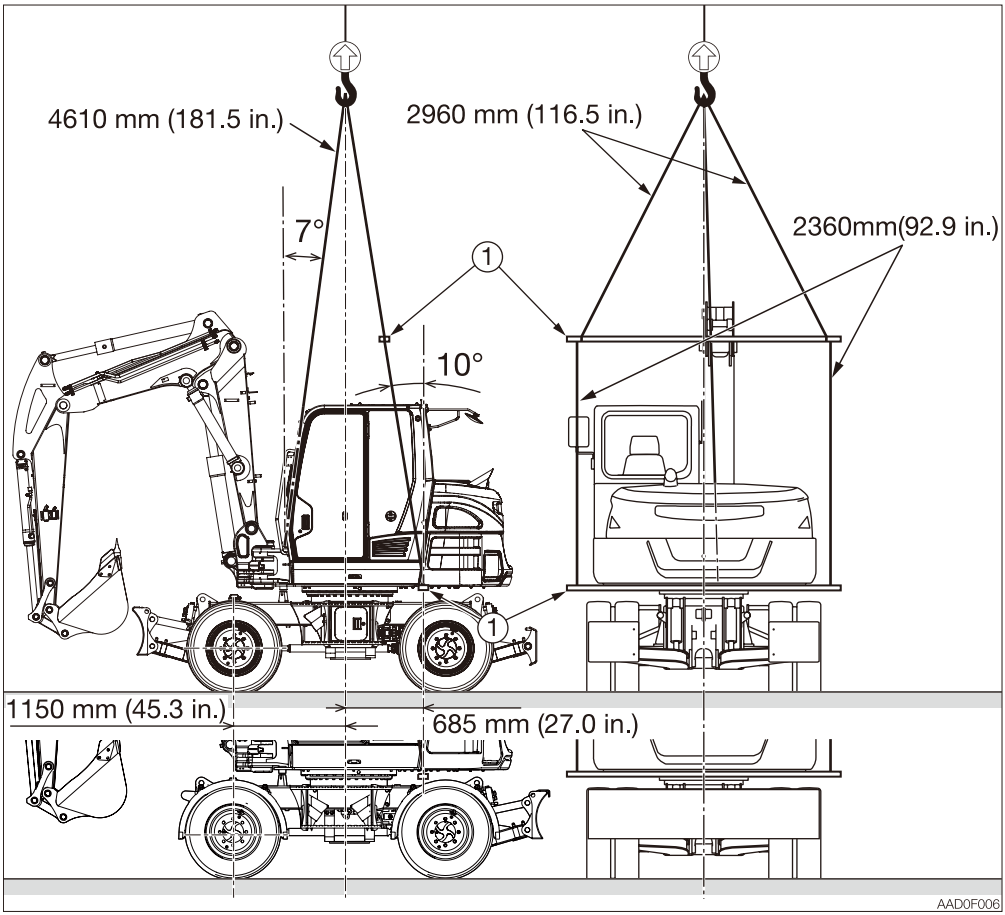

(1):Lifting tool

SECURING THE MACHINE

⚠ WARNING

Check the tie down point for damage or deformation on a daily basis and replace the parts if damage or deformation is found.

After loading the machine at the specified position, secure it as described below.

TRANSPORTING POSTURE

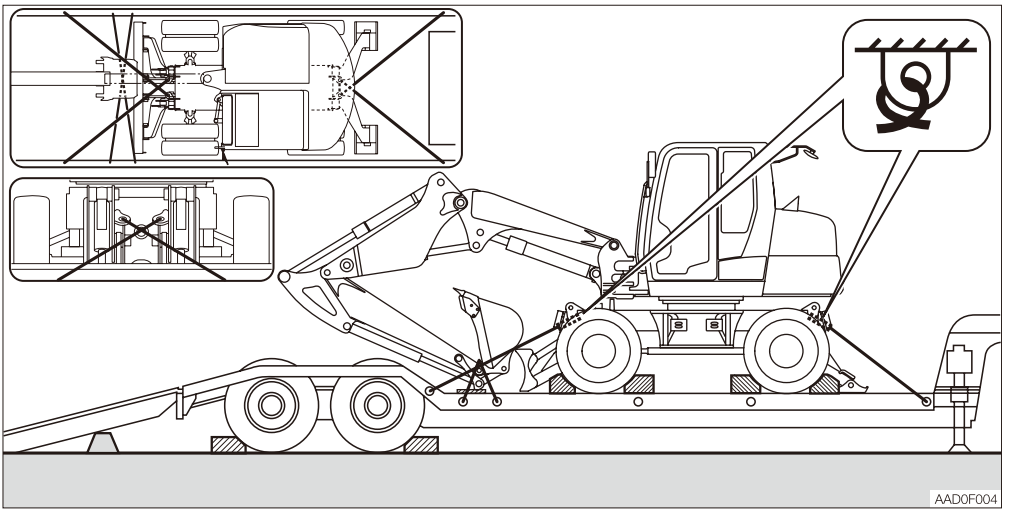

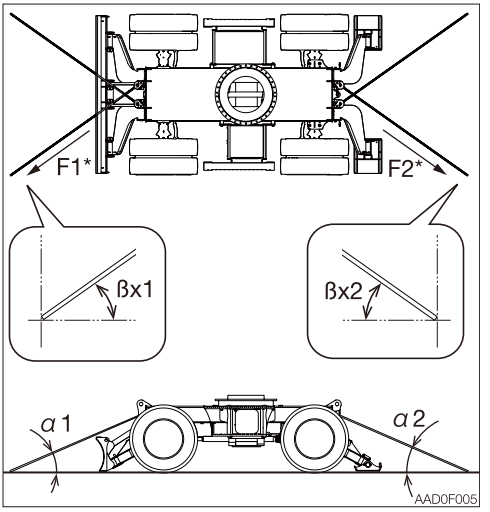

α1	24°
α2	24°
βx1	35-39°
βx2	35°
F1*	58.6 kN
F2*	57.3 kN

* : Distributed tying-down force

1. Lower the dozer blade.
2. Set the hoe attachment posture as above.
3. Raise the safety lock lever to the lock position, and engage the brake pedal lock and parking brake lock.
4. Stop the engine, remove the starter key and lock all locks.
5. Lock the slew with the slew lock pin.
6. Place the stoppers (chocks) in front of and behind the tires.
7. Install chains or wire rope over the lower frame of the machine and fasten it securely to prevent the machine from slipping sideways.
8. Secure the bucket with chains or wire rope.
9. For machines with outriggers, lower the outriggers.

IMPORTANT: Place a wooden block under the bucket to protect the floor from damage caused by the bucket.

PRECAUTIONS TO BE TAKEN DURING TRANSPORTATION

⚠ WARNING

- Know and follow the applicable safety rules, vehicle code and traffic laws when transporting the machine.
- Select the best transport route by considering the length, width, height and weight of the truck with the machine loaded on it.
- Never abruptly start or stop or run at a high speed at the sharp curves during transport. Doing so will move or lose the balance of the loaded machine.

⚠ CAUTION

If the machine is to be transported complete, by sea, for example, the special tie bar provided by the manufacturer is to be used.
For enquiries, contact the manufacturer.

Precautions for transportation by low loader and rail

For rail transport, the machine is to be carried on a suitable type of wagon. Information of loading procedures is available from the relevant rail authorities.
For road or rail transport, the upperstructure must be locked in position using the mechanism located near the operator's seat in order to prevent slewing; the slewing brake must be on; and the wheels must be chocked.
Any attached equipment is to rest on the floor of the transporter.

Road travel posture

2-Piece boom (One cylinder)

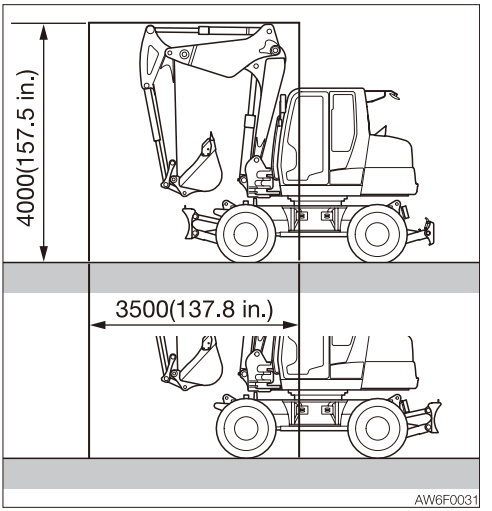

2-Piece boom (Two cylinders)

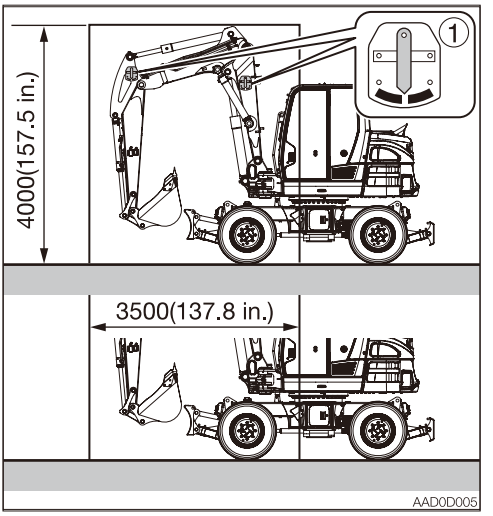

MAINTENANCE



GENERAL

MAINTENANCE OVERVIEW

To keep the machine in good condition and use if for a long period, perform the inspection and maintenance properly and safely following the procedures recommended by this manual.

The inspection and maintenance items are divided into groups according to the machine's total operating time: every 10 hours (walk-around and daily inspection), every 50 hours, every 250 hours, etc. Refer to the hour meter readings to determine when to schedule an inspection and maintenance. Items for which it is not possible to determine the inspection and maintenance interval are included under "When required".

When operating the machine in extremely harsh environments (with high dust levels or high temperatures), inspection and maintenance should be performed earlier than the times specified on the Maintenance List.

CAUTIONS ON MAINTENANCE

Do not perform any other inspection and maintenance works than those listed in this manual.
For works not listed in this manual, ask your sales or a service dealer for help.

Keep the machine clean

- Clean the machine before performing inspection and maintenance and try to keep it clean.
- Stop the engine before washing the machine. Cover the electrical parts so that water cannot enter. Water on electrical parts could cause short-circuits or malfunctions. Do not use water or steam to wash the battery, electronic control components, sensors, connectors or the operator's compartment.

Fuel, lubricant, grease and DEF/AdBlue®

- Choose fuel, lubricant, grease and DEF/AdBlue® by referring to the "Fuel and lubricant table".
- Use clean fuels, lubricants, greases and DEF/AdBlue® which do not contain water, and take care not to allow any dirt to enter the tank when replacing or refilling.
- Store fuels, lubricants, greases and DEF/AdBlue® in the prescribed places and in such a way that no water or dirt can get in them.

Cautions on refueling

- If the port includes a strainer, do not remove the strainer when fueling.
- After fueling, be sure to securely tighten the fuel filler cap.
- Do not add more than the specified amount of fuel.

Do not use fuel to clean parts
Do not use fuel to clean parts. Use a non-combustible cleaning agent.

Keep dirt out
When mounting and removing parts, do so in a place where there is no dust, clean the working area and the part, and keep dirt out.

Clean the installation surfaces
When installing and removing parts, be sure that the surfaces of contact of the parts are clean. If the sealing grooves of the surface of contact are damaged, consult your sales or service dealer for repair or release.

Seals and split pins
- Be sure to replace all seals and cotter pins with new ones.
- When installing, be careful not to damage or twist the seal.

Sealing tape

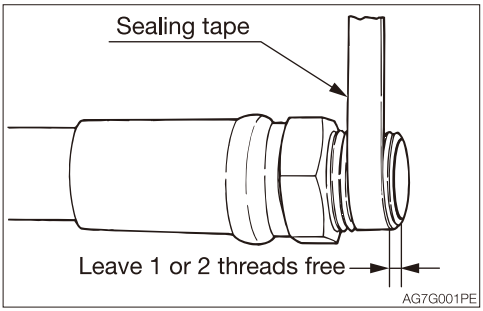

- When wrapping the plug with sealing tape, remove any old sealing tape from the threads and clean the threads.
- Wrap the thread tight with seal tape starting 1 or 2 threads away from the thread end.

Disposing of wastes
- Always collect oil that is drained from the machine in containers. Improperly disposed waste oil can cause environmental harm.
- Follow appropriate laws and regulations when disposing of harmful objects such as oil, fuel, cooling water, coolant, filters, batteries and DEF/AdBlue®.

Check after maintenance
- Gradually increase the engine speed from a low idle to maximum speed and check that there is no oil or water leaking from serviced parts.
- Operate each control lever and check that the machine is operating properly.

Cautions on handling of battery wiring
- Disconnect the wiring from the both terminals (+ and –) on the battery before working on the electrical system or doing electric welding.
  Always disconnect it from the earth side (–). When connecting, connect the earth side last.
- Do not disconnect the battery wiring while the engine is moving. Otherwise, the electric circuits of the rotary converter or others may be damaged.
- The SCR system operates for up to 2 minutes after the starter switch is turned to the OFF position.
  When removing the batteries or electrical connectors for inspection or maintenance, wait for at least 2 minutes after the starter switch is turned to the OFF position. Otherwise, the system could fail.

Do not let the wheels spin
Do not let the wheels spin when the undercarriage is raised. Doing so may damage the differential gears.

SERVICE DATA

FUEL AND LUBRICANT TABLE

Select the appropriate fuel, lubricant and grease according to the temperature by referring to the table below.

- Regardless of the specified time, change the oil if it becomes too dirty or degraded.
- When refilling, never mix oils of different brands. If a brand is to be changed, replace the whole fuel/oil.

Fuel

Diesel fuel specifications

Diesel fuel should comply with the following specifications. The table lists several worldwide specifications for diesel fuels.

Diesel fuel specification	Area
EN590: 2009	European union
Bio-diesel fuel Biodiesel blends up to B7 EN14214, EN590	
ASTM D975 No.1-D S15 No.2-D S15	USA Canada

Diesel fuel specification	Area
BS2869-A1 or A2	United kingdom
ISO 8217DMX	International

Precautions when using diesel fuel

- To maintain the performance and service life of the engine, always use clean and high-quality fuel.
- To avoid freezing in cold climates, use a diesel fuel that still functions when the temperature is at least 12°C (21.6°F) below the lowest expected ambient temperature.
- Use a diesel fuel that has a cetane number of 45 or higher. When operating at a very low temperature or at a high altitude, a higher cetane number fuel will be required.
- Use fuel with sulfur content of less than 15 ppm by volume.
  Especially in the U.S.A. and Canada, ultra-low sulfur fuel should be used.
  A higher sulfur content fuel may cause sulfuric acid corrosion in the cylinders of the engines.
- Never mix kerosene, used engine oil, or residual fuel with the diesel fuel. Use of kerosene is prohibited.
- Poor quality fuel can reduce engine performance and / or cause engine damage.
- Fuel additives are not recommended. Some fuel additives may cause poor engine performance.
- Use zinc- and sodium-free fuel.
- Do not use the fuel that has been in storage for a long time.
- Do not use the fuel purchased from a non-authorized dealer.
- In the EU, use fuel that satisfies the following conditions
  - Sulfur content is 10 mg/kg (10 ppm) or less, and 15 mg/kg (15 ppm) or less at the final distribution point.
  - Cetane number is 45% or more.
  - Fatty acid methyl ester (FAME) content is 7% v/v or less.

Precautions when using bio-diesel fuel

The warranty of the engine manufacturer may be voided by using a bio-diesel fuel that does not meet the standard or that is deteriorated.

Hydrotreated Vegetable Oil (HVO) fuel

HVO fuel compliant with EN15940 can be used.

IMPORTANT: Note that HVO fuel has a lower fuel density than light oil, which may reduce engine power and machine performance.

Precautions when using HVO fuel

Do not use HVO fuel that does not comply with the specified standards. Doing so could result in malfunction.

Lubricant

Location	Type	Type by air temperature -4 14 32 50 68 86 104°F -20 -10 0 10 20 30 40°C	When to replace
Hydraulic oil tank	Takeuchi genuine hydraulic oil 46	ISO VG46	Every 4000 hrs.***
	Biodegradable oil recommended by Takeuchi***** Mobil EAL Envirosyn 46H Panolin HLP Synth 46	ISO VG46	Every 4000 hrs.
	Anti-wear hydraulic oil	ISO VG32 ISO VG46 ISO VG68	Every 2000 hrs.***
Engine cooling system	Cooling water (water + coolant)** SAE: J814C or J1034	Mixture of 50% coolant Mixture of 30% coolant	Every 1000 hrs. or two years
Engine oil pan****	Shell Rimula R6 LM 10W-40		Every 500 hrs. or once a year
Differential	SAE80W-90(API GL-4 or GL-5) with LS additivated oils or UTTO(API GL-4).		Every 1000 hrs after the initial 100 hrs.*
Transmission	SAE80W-90(API GL-4 or GL-5) or UTTO(API GL-4)		
Hub			
King pin and Axle	Molybdenum grease	—	Every 250 hrs.
Propeller shaft	Lithium based grease EP-2 NLGI No.2		Every 250 hrs.
Slew bearing			Every 50 hrs.
Working equipment			Daily or every 10 hrs.
Levers			When required

LS: Non-slip agent

*: If the ratio of traveling time to total operating time is high, replace the gear oil earlier than the specified time.
**: For water, use tap water (soft). Do not use well or river water. When the ambient temperature drops below 0°C (32°F), add coolant (antifreeze). Follow the coolant manufacturer's instructions to determine the mixture ratio.
***: The hydraulic oil replacement interval depends on the type of hydraulic oil being used. New machine are delivered with Takeuchi genuine hydraulic oil 46, and the hydraulic oil replacement intervals indicated in this manual assume that Takeuchi genuine hydraulic oil 46 is being used. When using conventional antiwear hydraulic oil, the hydraulic oil should be replaced every 2000 hours.
****: The engine oil used at the factory. If any engine oil other than Shell Rimula R6 LM 10W-40 is to be used, refer to the engine oil list DQC IV LA. (See the instruction manual for the engine.)
*****: When replacing a mineral oil with a biodegradable oil, the residual mineral oil in the machine should be about 2% or less, as complying with the ISO 15380. For details, refer to "Biodegradable oil" on page 8-10.

API standard: American Petroleum Institute
ACEA standard: Association des Constructeurs Européens d'Automobiles
SAE standard: Society of Automotive Engineers

Volume

Engine oil pan	Engine cooling system	Hydraulic oil tank	Fuel tank
Upper limit: 10 L (10.6 US qt.) Lower limit: 9 L (9.5 US qt.)	24 L (6.3 US gal.)	System: 205 L (54.2 US gal.) Tank: 91.6 L (24.2 US gal.)	Level capacity: 162 L (42.8 US gal.)

Transmission	Differential	Hub	
1.8 L (1.9 US qt.)	Front: 7.0 L (7.4 US qt.) Rear: 7.8 L (8.2 US qt.)	Front: 2.1 L ×2 (2.2 US qt.) ×2 Rear: 0.8 L ×2 (0.85 US qt.) ×2	

Note: After flushing or changing hydraulic oil, the cleanliness of hydraulic oil before the operation shall be ISO CODE 20/17/14 or better as specified in ISO.

HYDRAULIC SYSTEM SPECIFICATIONS

Working pressure range	P1 MAIN : 27.5 MPa (3988.5psi) P2 Pilot : 3.5 MPa (507.6psi) See workshop manual for detail. “Service data - Specification table”
Working temperature range	-40 to 100°C (-40 to 212°F)
Type of fluid being used	ISO VG32 - 68 or equivalent oil. See workshop manual for detail. “Service data - Table of fuel and lubricant”
Working flow-rate range	P1 MAIN : 176.0 L/min (46.5 US gal/min) P2 Pilot : 15.4 L/min (4.1 US gal/min) See workshop manual for detail. “Service data - Specification table”
Lifting provisions	Refer to “Hoisting the machine” on page 4-4.
Emergency, safety and energy isolation requirements	Refer to “Operating the machine with an accumulator” on page 2-122.
Painting or protective coating	Painted or plated (each hydraulic components)

REGULARLY REPLACE THE HYDRAULIC OIL

When a hydraulic breaker is used, the oil deteriorates more quickly than that used for a usual excavation operation. Be sure to replace the hydraulic oil and the return filter elements.

- Failure to replace these in time can lead to damage to the machine and the breaker hydraulic system. To prolong the service life of the hydraulic devices, properly replace the hydraulic oil and the return filter elements according to the table below.
- When replacing the hydraulic oil, clean the suction strainer.

Replacement interval (hours)

Item	Hydraulic oil	Filter element
1st time	—	25
2nd time	—	100
Periodically	1200 (600)	200

When the breaker operating ratio is 100%.
Refer to “Hydraulic breaker” on page 8-6.

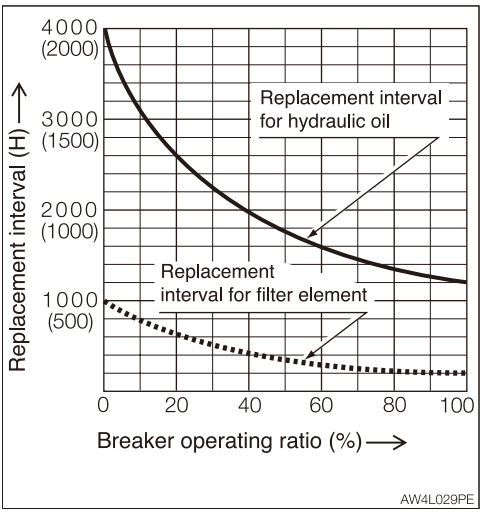

( ): When a conventional antiwear hydraulic oil is used.

HANDLING OF DEF/ADBLUE®

The standard for DEF/AdBlue®
The DEF/AdBlue® used must be compliant with ISO 22241.

Quantity of DEF/AdBlue® to add

DEF/AdBlue® tank
Tank capacity 10 L (2.6 US gal.)

Storing DEF/AdBlue®
- Store the DEF/AdBlue® solution in a sealed container to prevent it from vaporizing.
- Store the solution in an indoor place, away from the direct sunlight, well vented and at the temperature lower than 25°C (77°F). Do not store it in a place where the temperature falls below –5°C (23°F).
- The life of DEF/AdBlue® is dependent on the temperature of the room it is stored.
- The quality of DEF/AdBlue® is maintained even after it is frozen and thawed. It is useable without doing anything.
- When storing or carrying the DEF/AdBlue® solution, use the container in which it was contained when purchased.
  If you must use the other container made out of polyethylene or stainless steel, choose a clean one without any water or dirt adherent to it and clean it with the DEF/AdBlue® solution before use.
- Do not store the DEF/AdBlue® solution in a place where the temperature may become extremely high.
  There is a risk that ammonia gas may be released if the DEF/AdBlue® solution heats up to high temperature.
  Seal the container before storing, and open the seal in an open outdoor area.
  If there is a pungent odor, do not get near it unless necessary.
- Do not use expired DEF/AdBlue® solution (including solution left in the tank) stored for a long period. Doing so could cause ammonia slip, degraded NOx conversion efficiency or device damage. For the life of DEF/AdBlue®, refer to the table below.

Effective storage period in accordance with JIS K2247-3/ISO 22241-3

Storage temperature	Expected DEF/AdBlue® life
$\leqq$ 10°C (40°F)	36 months
10°C (40°F)<T $\leqq$ 25°C (77°F)	18 months
25°C (77°F)<T $\leqq$ 30°C (86°F)	12 months
30°C (86°F)<T $\leqq$ 35°C (95°F)	6 months

LIST OF CONSUMABLES

Periodically replace consumables such as filters and elements according to the table below.

System	Item	Part name	Part No.	When to replace
Hydraulic system	Hydraulic oil return filter	Element	15511-03900	Every 1000 hrs after the initial 50 hrs.
	Pilot line filter		15512-00601	
	Travel line filter	Element	15511-01001	Every 500 hrs after the initial 50 hrs.
	Air breather filter	Element	15520-05002	Every 1000 hrs.
	Air breather		15520-07000	
Engine lubrication system	Engine oil filter	Cartridge	19039-00216	Every 500 hrs. or once a year
SCR system	Supply module filter	Cartridge	D04602317	Every 1000 hrs. or three years
Fuel system	Pre-fuel filter	Element kit	19039-00237	Every 1000 hrs. or once a year
	Main fuel filter		19039-00218	
Air cleaner system	Air cleaner	Primary (Outer) element	19111-14001	Every 1000 hrs. or two years
		Secondary (Inner) element	19111-14002	When the primary elements are replaced.
AC system	Receiver dryer		19115-17105	Every 2 years
	Circulation filter	Element	19115-17127	Once a year or if clogging remains after cleaning
	Ventilation filter		19115-17103	

LIST OF TOOLS (IF EQUIPPED)

Code	Part name	Part No.	Remarks
1	Spanner	16900-01012	10-12
2	Spanner	16900-01417	14-17
3	Screwdriver	16902-20205	(+) (–) replaceable shank
4	Hammer	16903-00330	3/4
5	Adjustable wrench	16904-00250	250 mm
6	Pliers	16905-00200	200 mm
7	Spanner	16900-01013	10-13
8	Spanner	16900-01922	19-22
9	Spanner	16900-02427	24-27
10	Spanner	16900-02730	27-30
11	Spanner	16900-03236	32-36
12	Single-ended wrench	16901-00041	41
13	Hex. wrench	16906-00250	2.5 mm
14	Hex. wrench	16906-00500	5 mm
15	Hex. wrench	16906-00600	6 mm
16	Hex. wrench	16906-00800	8 mm
17	Hex. wrench	16906-01000	10 mm
18	Hex. wrench	16906-01200	12 mm
19	Tool case	16914-00005	
20	Grease gun	16910-60600	500 cc
21	Drain connector	15545-12201	M22
22	Nozzle	16911-10003	
23	Special tool	05692-00096	SST

LIST OF TIGHTENING TORQUES

Nuts and Bolts (for ISO strength category 10.9)

Tighten nuts and bolts at the torques shown on the table below, unless otherwise specified.

- The tightening torques used for the mounted plastic covers are not listed in the table below. Consult your sales or service dealer for details. They will be damaged if over tightened.
- When replacing nuts and bolts, replace them with nuts and bolts of the same size and standards.
- Tighten nuts and bolts alternately (top, bottom, left then right) or in 2 or 3 times so that they are evenly tightened.

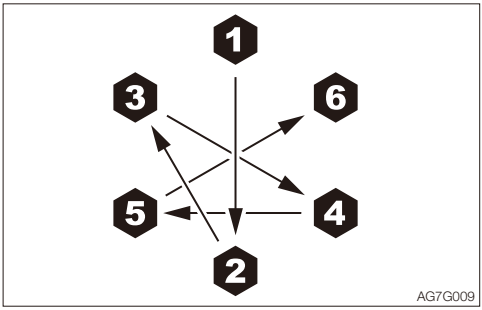

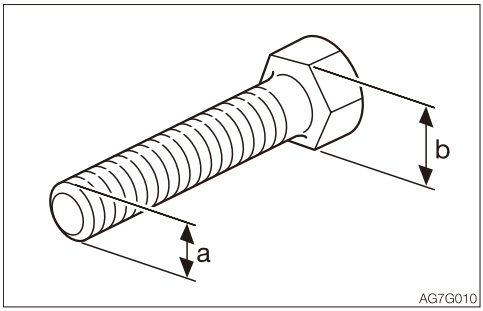

Classification	Head width (b)	Size (a) x pitch	Tightening torque	
			General connection points	
	mm	mm	N·m	ft-lb
Coarse	10	M6 x 1.0	9.8±0.8	7.2±0.6
	12, 13	M8 x 1.25	23±1.8	17±1.4
	14, 17	M10 x 1.5	47±3.8	35±2.8
	17, 19	M12 x 1.75	83±6.6	62±5
	19, 22	M14 x 2.0	134±10.7	99±7.9
	22, 24	M16 x 2.0	208±16.6	153±12.2
	27, 30	M20 x 2.5	411±32.9	303±24.2
Fine	12, 13	M8 x 1.0	25±2	18±1.4
	14, 17	M10 x 1.25	50±4	37±3
	17, 19	M12 x 1.5	87±7	64±5.1
	19, 22	M14 x 1.5	135±10.8	100±8
	22, 24	M16 x 1.5	221±17.7	163±13
	27, 30	M20 x 1.5	452±36.2	333±26.6

MEMO

SAFETY-CRITICAL PARTS

To use the machine safely, periodically perform inspection and maintenance. The safety-critical parts listed below must be periodically replaced for an increased safety.
Serious injury or a fire could result if they are worn or damaged.

List of safety-critical parts

Unit		Safety-critical parts to be replaced periodically	When to replace
Fuel system		Fuel hoses	Every 2 years
		Packing on fuel filler cap	
Cooling system		Rubber hoses	
Heater & Air conditioner systems		Heater hoses	
		Air conditioner hoses	
Hydraulic system	**Main body**	Hydraulic hoses (pump - delivery)	
		Hydraulic hoses (pump - suction)	
		Hydraulic hoses (slew motor)	
		Hydraulic hoses (travel motor)	
	Working equipment	Hydraulic hoses (boom cylinder piping)	
		Hydraulic hoses (second boom cylinder piping)	
		Hydraulic hoses (arm cylinder piping)	
		Hydraulic hoses (bucket cylinder piping)	
		Hydraulic hoses (swing cylinder)	
		Hydraulic hoses (brake line)	
		Hydraulic hoses (blade cylinder)	
		Hydraulic hoses (outrigger cylinder)	
		Hydraulic hoses (ram lock cylinder)	
		Hydraulic hoses (pilot valve)	
		Hydraulic hoses (auxiliary piping)	
		Hydraulic hoses (steering valve)	
		Seat belt	Every 3 years
		Non-slip sheet	
Engine		V-rib belt	Every 3000 hrs.

The material of the safety-critical part listed above tends to change over time and cause wear or deterioration. It is difficult to determine the degree of deterioration at the periodic inspection, and thus they need to be replaced with new ones after a certain time to maintain their proper performance even if they appear in good condition. Note that regardless of the replacement schedule, replacement must be performed immediately if a symptom of wear is found. If a hose clamp is deformed or cracked, replace it together with the hose immediately. When replacing the safety-critical parts, ask your sales or service dealer.
In addition to the safety-critical parts, inspect the hydraulic hoses and retighten or replace as necessary. When replacing the hydraulic hoses, replace the O-rings and seals at the same time.
Check the fuel and hydraulic hoses according to the periodic schedule described below. Refer to “Maintenance”.

Type of inspection	Inspection item
Daily inspection	Leakage from the connecting parts of hydraulic or fuel hoses Damage to cab replace*
Monthly inspection	Leakage from the connecting parts of hydraulic or fuel hoses Damaged hydraulic or fuel hoses (cracks, wear and tear)
Annual inspection	Leakage from the connecting parts of hydraulic or fuel hoses Deteriorated, twisted, damaged hydraulic or fuel hoses (cracks, wear and tear) or hoses in contact with other parts of the machine

*: Cab parts No. 05686-00187

MAINTENANCE LIST

Inspection and maintenance item	Page
Walk-around inspection	
Inspecting by opening the engine hood and covers	5-20
Inspecting by walking around the machine	5-21
Inspecting while sitting in the operator's seat	5-21
Daily inspection (every 10 hours)	
Inspecting and replenishing the coolant	5-22
Inspecting and replenishing the engine oil	5-24
Inspecting the pre-fuel filter and draining	5-25
Inspecting the fuel level	5-26
Inspecting the hydraulic oil tank level and replenishing	5-26
Cleaning the air cleaner	5-28
Lubricating the working equipment	5-30
Checking the DEF/AdBlue® level and refilling	5-31
Inspecting and inflating the tires	5-34
Checking the wheel nut torques	5-36
After the initial 50 hours (only for new machines)	
Inspecting and adjusting the compressor belt (AC)	5-37
Replacing the hydraulic oil return filter	5-39
Replacing the pilot line filter	5-40
Replacing the travel line filter	5-41
Every 50 hours	
Lubricating the slew bearing	5-43
Inspecting the ram lock cylinder (applying rust-inhibitor)	5-43
Draining the water from the fuel tank	5-44
Inspecting the battery	5-45
After the initial 100 hours (only for new machines)	
Replacing the transmission gear oil	5-47
Replacing the differential gear oil	5-48
Replacing the hub gear oil	5-49

* (AC) : Air conditioner

Inspection and maintenance item	Page
Every 250 hours	
Inspecting and adjusting the compressor belt (AC)	5-50
Lubricating the undercarriage	5-51
Inspecting the transmission gear oil	5-52
Inspecting the differential gear oil	5-53
Inspecting the hub gear oil	5-54
Cleaning the radiator fins and the oil cooler fins	5-55
Cleaning the air filters (AC)	5-56
Cleaning the condenser (AC)	5-57
Inspecting the refrigerant (gas) level (AC)	5-58
Every 500 hours	
Replacing the travel line filter	5-60
Inspecting and adjusting the service brake	5-60
Replacing the engine oil and the oil filter	5-60
Inspecting the concentration of coolant additive	5-62
Inspecting the slew pinion gear	5-63
Every 1000 hours	
Replacing the hydraulic oil return filter	5-64
Replacing the pilot line filter	5-64
Replacing the transmission gear oil	5-64
Replacing the differential gear oil	5-64
Replacing the hub gear oil	5-64
Inspecting and adjusting the negative brake	5-64
Replacing the engine cooling system	5-65
Replacing the air cleaner element	5-67
Replacing the air breather filter	5-68
Replacing the fuel filters	5-69
Replacing the DEF/AdBlue® supply module filter	5-70
Inspecting and adjusting the V-rib belt	5-71
Inspecting the engine installation condition	5-71
Inspecting the low-temperature starting device	5-71

* (AC) : Air conditioner

Inspection and maintenance item	Page
Every 2000 hours	
Inspecting the accumulator	5-72
Every 3000 hours	
Replacing the V-rib belt	5-74
Every 4000 hours	
Replacing the hydraulic oil and cleaning the suction strainer	5-75
When required	
Replacing the bucket teeth and the side cutters	5-79
Replacing the bucket	5-82
Adjusting the gap between the bucket and arm (If equipped)	5-84
Inspecting and replenishing the windshield washer fluid	5-86
Lubricating the levers and pedals	5-87
Replacing the diesel particulate filter	5-88
Every 2 years	
Replacing the receiver dryer	5-89

WALK-AROUND INSPECTION

Perform the following inspections every day before starting the engine for the first time.

⚠ WARNING

- **Before operating, perform the walk-around inspections and make repairs immediately where necessary.**
- **Be sure to secure the engine hood or cover before working the inside. Do not keep the hood or cover open on a windy day or if the machine is parked on a slope.**

Before starting the engine, look around the machine and clean any combustibles from the surroundings of the engine. Also, inspect if oil or water is leaking and any nuts, bolts or electric wiring are loosened or damaged.

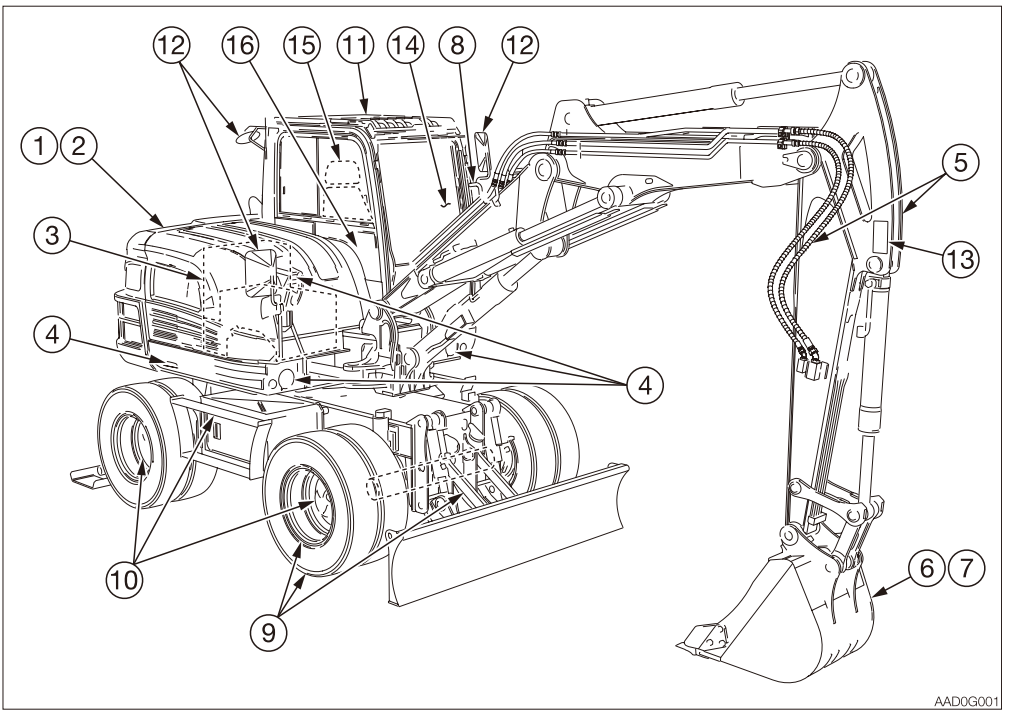

INSPECTING BY OPENING THE ENGINE HOOD AND COVERS

1. Check for any twigs, leaves, oil or other combustible materials around the engine and battery.
2. Check for leakage of oil, fuel, DEF/AdBlue® or engine cooling water around the engine.
3. Check for oil leakage from the hydraulic oil tank, hydraulic devices, hoses or connections.

INSPECTING BY WALKING AROUND THE MACHINE

4. Check lights for dirt, damage and burnt out bulbs.
5. Check attachments and hoses for damage.
6. Check the bucket, bucket teeth and side cutter for wear, damage and looseness.
7. Check the hook, slip stopper and hook mount of buckets with hooks for damage. (Option)
8. Check the handrail, the steps and the slip-resistant surfaces for damage and loose bolts.
9. Check the tires, wheels, axles and drive shaft for damage, wear and loose bolts.
10. Check for oil leakage from the travel motor, transmission, differential and hubs.
11. Check the cab and guard for damage and loose nuts and bolts.
12. Check the rear view mirror and room mirror for dirt, damage and angle adjustment.
13. Check the labels for dirt and damage.

INSPECTING WHILE SITTING IN THE OPERATOR'S SEAT

14. Check the windshield for dirt or damage.
15. Check the seat and seat belt for dirt or damage.
    Check the operator's seat for dirt, oil or other combustible materials.
16. Check the monitor, instruments and switches for dirt or damage.

DAILY INSPECTION (EVERY 10 HOURS)

Perform the following inspections every day before starting the engine for the first time.

⚠ WARNING

- **Before operating, perform the daily inspections and make repairs immediately where necessary.**
- **Be sure to secure the engine hood or cover before working the inside. Do not keep the hood or cover open on a windy day or if the machine is parked on a slope.**

INSPECTING AND REPLENISHING THE COOLANT

Select a firm, level work area. Make sure there is adequate light and, if indoors, ventilation.

⚠ WARNING

- **Do not remove the radiator cap or the drain plug when the cooling water is hot. Stop the engine and wait until the engine and the radiator cool before slowly loosening the radiator cap and the drain plug to remove them.**
- **Always wear the protective goggle and gloves when handling coolant (antifreeze). If any coolant (antifreeze) comes in contact with eyes or skin, wash it off with clean water. Otherwise, it could result in injures.**
- **Before performing maintenance on top of the work bench, clean the footing and observe the following precautions to prevent falling.**
  - **Do not spill oil or grease.**
  - **Do not leave tools scattered around.**
  - **Watch your step when walking.**
- **Never jump down from the machine or the work bench. When getting on or off the machine or work bench, use the steps, handrails or work bench to support your body. Your weight should be evenly distributed among the three contact points (one hand and two feet or two hands and one foot).**
- **Do not stand on the dozer blade and perform maintenance work. Doing so is dangerous because of the unsteady foothold. Use the work bench.**

Inspection

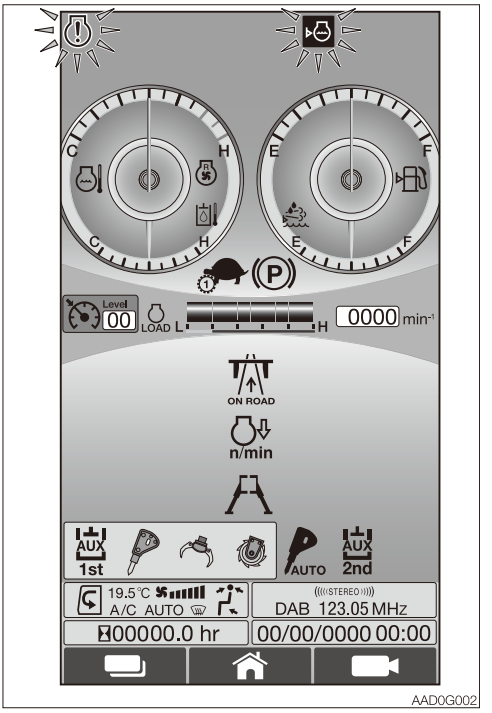

Inspect the coolant level by checking the coolant level warning lamp on the multi information display.
Refer to “4. Coolant level warning lamp” on page 2-23.
If the lamp is flashing, add the coolant.

Replenishing

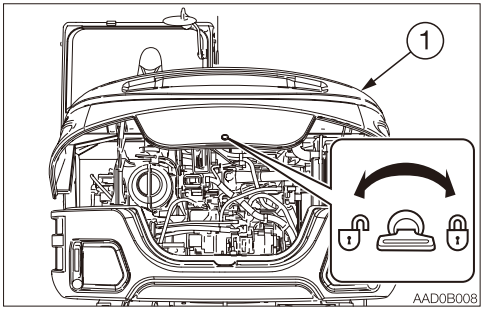

1. Open the engine hood.

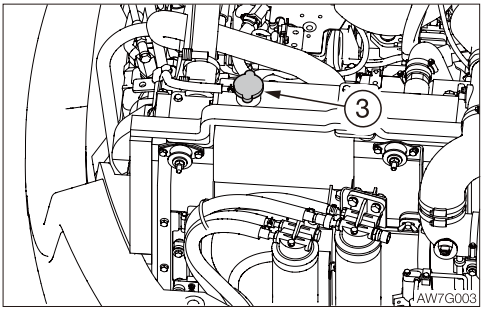

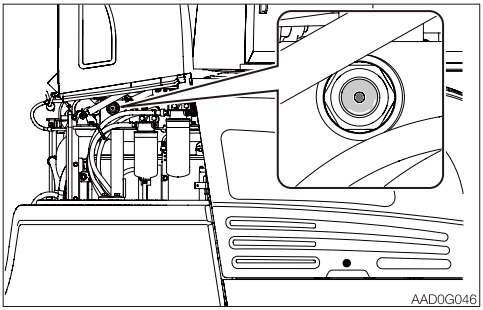

2. Directly add cooling water to the radiator (3) until the gauge is filled.

Note: Use only clean water (soft water), such as tap water, to replenish the coolant loss due to evaporation. If the coolant loss is due to leakage, replenish the mixture of antifreeze and clean water (soft water) prepared using the same mixing ratio used for the current coolant.

INSPECTING AND REPLENISHING THE ENGINE OIL

⚠ WARNING

- **Be sure to stop the engine before performing the inspection and maintenance.**
- **The parts of the machine are hot immediately after the engine is stopped. Be careful not to burn yourself.**
- **Be aware of the high-temperature engine oil. You could burn yourself with it.**
- **Before performing maintenance on top of the work bench, clean the footing and observe the following precautions to prevent falling.**
  - **· Do not spill oil or grease.**
  - **· Do not leave tools scattered around.**
  - **· Watch your step when walking.**
- **Never jump down from the machine or the work bench. When getting on or off the machine or work bench, use the steps, handrails or work bench to support your body. Your weight should be evenly distributed among the three contact points (one hand and two feet or two hands and one foot).**
- **Do not stand on the dozer blade and perform maintenance work. Doing so is dangerous because of the unsteady foothold. Use the work bench.**

Inspection

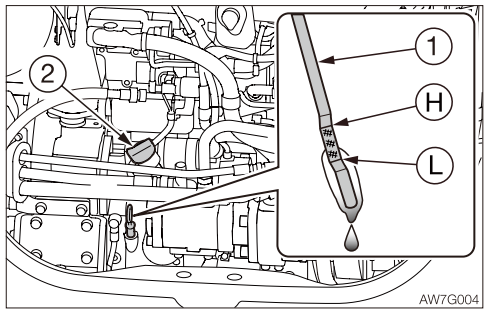

1. Open the engine hood.
2. Take out the dipstick (1) and wipe the oil off with a rag.
3. Fully reinsert the dipstick (1), and then pull it back out.
4. Check the oil on the dipstick (1).
   The level should be between the upper limit (H) and the lower limit (L).
   If it is below the lower limit (L), replenish.

Replenishing

1. Remove the oil filler cap (2).
2. Add oil up to between the upper limit (H) and the lower limit (L) of the dipstick (1).
   Problems could arise if the oil level is either too low or too high.
3. Tighten the oil filler cap (2).
4. Perform the engine warm-up procedure.
   (When the engine oil temperature is lower than 80°C)
5. Park the machine on a level ground and wait for five minutes. Inspect the oil level again while the engine oil is still warm.

INSPECTING THE PRE-FUEL FILTER AND DRAINING

⚠ WARNING

- Do not smoke or permit open flames while handling fuel or working on the fuel system.
- Stop the engine in a well-ventilated place and allow it to cool down before performing maintenance.
- Clean up spilled fuel immediately.
- Before performing maintenance on top of the work bench, clean the footing and observe the following precautions to prevent falling.
  - · Do not spill oil or grease.
  - · Do not leave tools scattered around.
  - · Watch your step when walking.
- Never jump down from the machine or the work bench. When getting on or off the machine or work bench, use the steps, handrails or work bench to support your body. Your weight should be evenly distributed among the three contact points (one hand and two feet or two hands and one foot).
- Do not stand on the dozer blade and perform maintenance work. Doing so is dangerous because of the unsteady foothold. Use the work bench.

Inspection

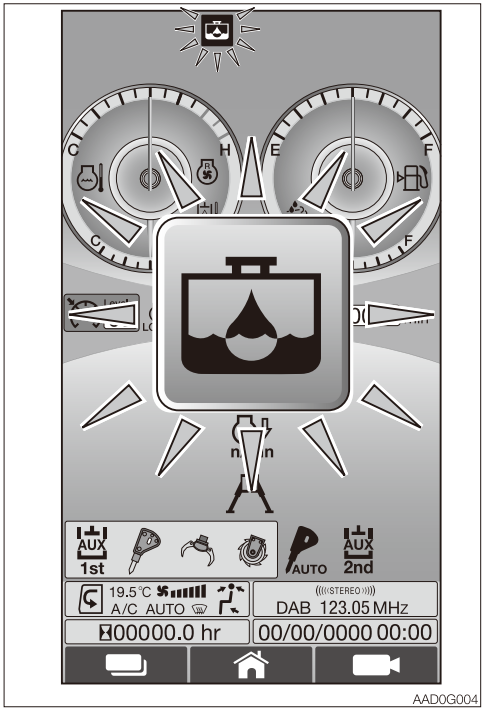

1. Turn the starter switch to the ON position.
2. Inspect the water separator warning lamp.
3. If the warning lamp is flashing, drain the water.

Draining

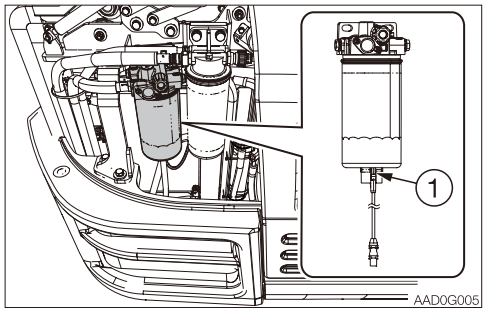

1. Turn the starter key to the OFF position to stop the engine.
2. Open the engine hood.
3. Remove the electric wiring.

4. Place a pan for catching fuel under the drain valve (1).
5. Loosen the drain valve (1) to drain water until the pure fuel comes out.
6. Tighten the drain valve (1).
   Tightening torque: 1.6±0.3 N·m (1.2±0.2 ft-lb)
7. Install the electric wiring.

INSPECTING THE FUEL LEVEL

⚠ WARNING

- **Do not smoke or permit open flames while handling fuel or working on the fuel system.**
- **Never remove the fuel cap or add fuel when the engine is running or still hot. Do not spill fuel on the hot surface of the machine.**
- **Fill the fuel tank in a well ventilated place.**
- **Clean up spilled fuel immediately.**
- **Do not fill the fuel tank to capacity. Allow room for oil expansion.**
- **Securely tighten the fuel filler cap.**
- **Use the correct grade of fuel for the operating season.**

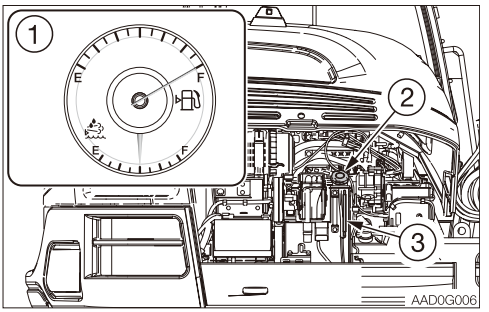

1. Check the fuel level using the fuel gauge (1).
   F: Tank is full.
   E: Tank is empty.
2. If the fuel level is low, open the fuel lid.
3. Add fuel from the fuel filler port (2) while watching the sight gauge (3).
   Refer to “Fuel filler port” on page 2-8.

INSPECTING THE HYDRAULIC OIL TANK LEVEL AND REPLENISHING

⚠ WARNING

- **Oil may spurt out if caps or filters are removed or pipes are disconnected before releasing the pressure in the hydraulic system.**
  - **Press the air breather button to relieve the internal pressure from the tank.**
- **Before performing maintenance on top of the work bench, clean the footing and observe the following precautions to prevent falling.**
  - **Do not spill oil or grease.**
  - **Do not leave tools scattered around.**
  - **Watch your step when walking.**
- **Never jump down from the machine or the work bench. When getting on or off the machine or work bench, use the steps, handrails or work bench to support your body. Your weight should be evenly distributed among the three contact points (one hand and two feet or two hands and one foot).**
- **Do not stand on the dozer blade and perform maintenance work. Doing so is dangerous because of the unsteady foothold. Use the work bench.**

Inspection

The oil level changes with the oil temperature. Inspect the oil by maintaining the machine at posture shown in the figure at the next.

- Machine posture for inspecting the hydraulic oil level

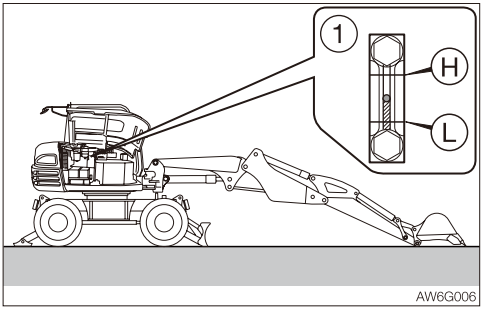

1. Start the engine and run it at low speed.
2. Fully retract the bucket cylinder and arm cylinder, fully extend the second boom cylinder, and lower the bucket to the ground.
3. Lower the dozer blade, and then stop the engine.
4. Open the right side cover.
5. Inspect the oil level using the sight gauge (1).
   - When the oil temperature is about 20°C (68°F):
     The level should be between the upper limit (H) and the lower limit (L).
     If it is below the lower limit (L), replenish.
   - When the oil temperature is about 50 to 80°C (122 to 176°F):
     The level should be slightly below the upper limit (H).

Replenishing

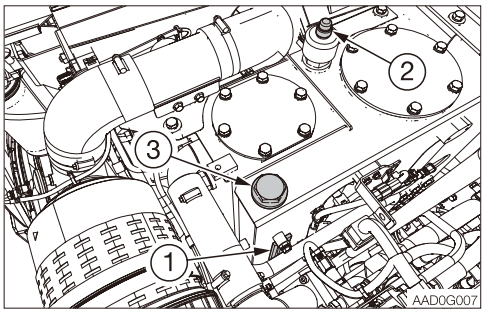

IMPORTANT: Do not fill up to the level higher than the upper limit (H). It will damage the hydraulic circuits or result in oil spurting. If accidentally done, stop the engine and wait the hydraulic oil to cool, and then let the excessive oil to drain from the drain plug.

1. Press the air breather button (2) to relieve the internal pressure from the tank.
2. Remove the plug (3).
3. Add the hydraulic oil up to the middle of the sight gauge (1).
4. Tighten the plug (3).

CLEANING THE AIR CLEANER

⚠ WARNING

- Stop the engine and allow the machine to cool down before performing maintenance.
  - The engine, muffler, radiator and many other parts of the machine are hot immediately after the engine is stopped. Touching it will cause burns.
- Wear required appropriate equipment such as protective goggle and filter mask when using compressed air, as metal fragments or other objects can fly and cause serious injury.
- Before performing maintenance on top of the work bench, clean the footing and observe the following precautions to prevent falling.
  - Do not spill oil or grease.
  - Do not leave tools scattered around.
  - Watch your step when walking.
- Never jump down from the machine or the work bench. When getting on or off the machine or work bench, use the steps, handrails or work bench to support your body. Your weight should be evenly distributed among the three contact points (one hand and two feet or two hands and one foot).
- Do not stand on the dozer blade and perform maintenance work. Doing so is dangerous because of the unsteady foothold. Use the work bench.

IMPORTANT: Be careful not to scratch the element. Do not use an element if it is damaged.
IMPORTANT: When operating the machine in very dusty places, perform inspection and maintenance operations every day.
IMPORTANT: Be sure to install the element and dust cap securely. If not, dust could be drawn into the cylinder, damaging the engine.

Inspection

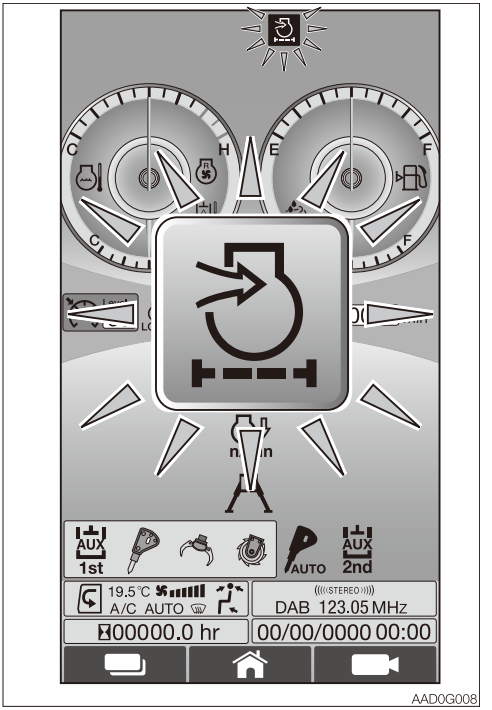

1. Turn the starter switch to the ON position.
2. Check the air cleaner warning lamp.
3. Clean the air cleaner if the warning lamp is flashing.
   If it is extremely dirty, replace the air cleaner element.
   Refer to “Replacing the air cleaner element” on page 5-67.

Cleaning the air cleaner

1. Open the right side cover.

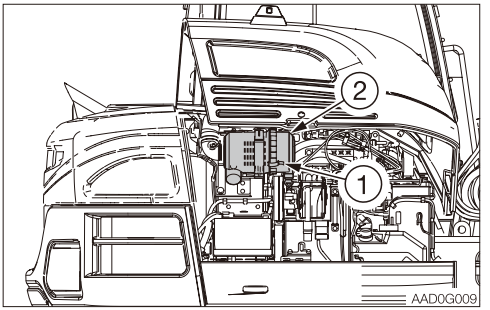

2. Loosen the clamps (1) and remove the dust cup (2).

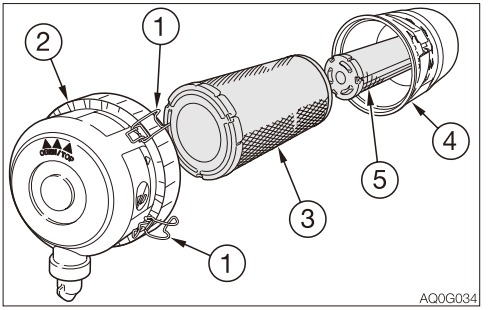

3. Clean the inside of the dust cup (2).
4. Remove the primary element (3).
   To prevent dirt from getting inside the engine, do not remove the secondary element (5).
5. Clean the inside of the body (4).

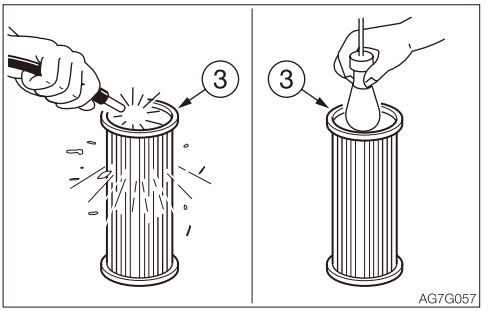

6. Clean the primary element (3) with dried compressed air (500 kPa/72.5 psi or less). First blow the air from the inside of the element along the pleats. Then blow the air from the outside and finally from the inside again.
7. Light up the inside of the primary element (3) with a light bulb, inspect it, and replace it if there are small holes or thin spots.
8. Install the primary element (3).
9. Install the dust cup (2) with its "▲▲▲ OBEN/TOP" mark facing up, and then fasten it with the clamps (1).

LUBRICATING THE WORKING EQUIPMENT

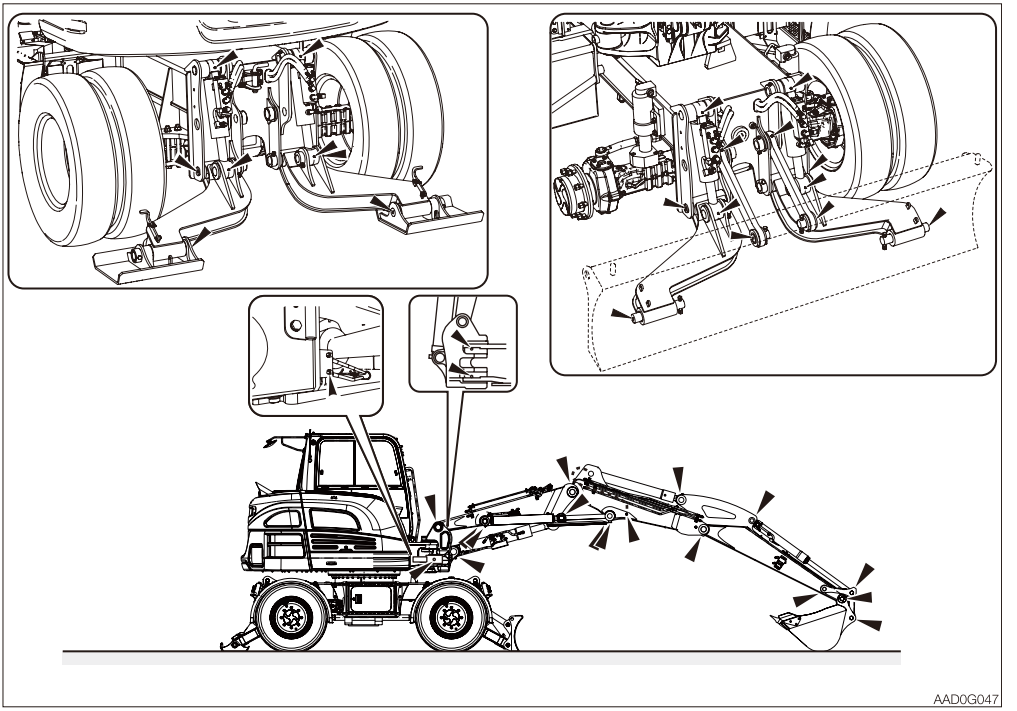

1. Keep the machine configuration as shown in the diagram above, lower the working equipment to the ground, and then stop the engine.
2. Use the grease gun to lubricate the grease fittings.
3. Wipe off the excess grease.

CHECKING THE DEF/ADBLUE® LEVEL AND REFILLING

⚠ WARNING

- When removing the cap from the DEF/AdBlue® tank, take care not to inhale steam.
- Do not put anything else other than DEF/AdBlue® solution in the DEF/AdBlue® tank. Putting liquids, particularly light oil or gasoline, in the tank could cause a fire or damage the SCR system. If this is accidentally done, contact a Takeuchi service dealer.

⚠ CAUTION

- DEF/AdBlue® is a colorless, transparent, odorless and non-hazardous aqueous solution (32.5% urea, 67.5% water, freezes at –11°C), and is harmless to the human body. In very rare cases, however, inflammation could occur in some people, and thus proper actions should be taken as follows.
- If skin contact occurs, flush with water. If there are changes in the skin condition or if there is pain, immediately seek medical attention.
- If accidentally swallowed, drink one or two glasses of water or milk and immediately seek medical attention.
- If eye contact occurs, immediately flush with a large amount of clean water and seek medical attention.

IMPORTANT:

- Do not use expired DEF/AdBlue® solution (including solution left in the tank) stored for a long period. Doing so could cause ammonia slip, degraded NOx conversion efficiency or device damage.
- When handling DEF/AdBlue®, do not use anything such as cotton work-gloves whose fibers could get into the solution. Doing so could cause clogging of the DEF/AdBlue® filter or urea deposit at the DM injection port.
- When refilling, be sure to use DEF/AdBlue® conforming to ISO 22241. Do not dilute it or mix it with other chemicals.
- When removing the cap from the DEF/AdBlue® tank, take care not to allow any soil or dirt to enter the tank. Otherwise, the SCR system could fail.
- Do not overfill the tank with DEF/AdBlue® or top off the tank while the engine is running. Doing so could cause the solution to leak from the breather and to freeze. The frozen solution could damage the sensor.
- Do not stand on top of the DEF/AdBlue® tank or piping, and do not put things on them. Doing so could damage them.
- Wipe off any spill of DEF/AdBlue® and rinse it off with water.
- A dry white powder of DEF/AdBlue® may be deposited around the refill port. Wipe it off so that the powder does not enter the tank.
- If DEF/AdBlue® is added while the engine is running or the starter switch is ON, it takes a long time for the level of the DEF/AdBlue® solution to reach the correct level.

Checking the level

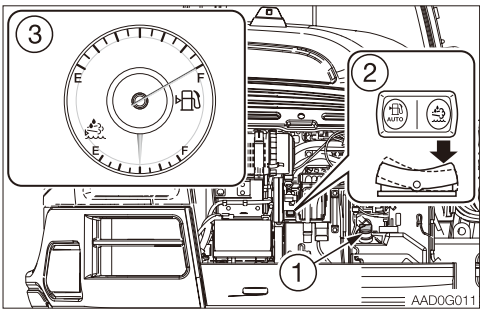

Use the DEF/AdBlue® level indicator (3) to check the amount of the DEF/AdBlue® solution remaining.

F: Tank is full.
E: Tank is empty.

Refilling

1. Turn the starter key to the OFF position to stop the engine.
2. Insert the starter key and turn it counterclockwise to unlock the right side cover.
3. Turn the DEF/AdBlue® tank cap (1) counterclockwise and remove it.
4. Press the DEF/AdBlue® symbol side of the refill switch (2) to refill while the buzzer is sounding.
   (The corresponding switch lamp lights up or flashes in conjunction with the buzzer.)
   Buzzer keeps sounding: 100%
   Buzzer sounds at intervals of 0.6 seconds: 80 to 100%
   Buzzer sounds at intervals of 2 seconds: Under 80%
   Buzzer sounds at intervals of 0.3 seconds: Failure
   Upon completion of refilling, press the refill switch (2) again to stop the buzzer sounding. (The buzzer automatically stops sounding after 20 minutes.)
5. Install the DEF/AdBlue® tank cap (1) on the filler port, and then turn the cap clockwise to close.
6. Close the cover and lock it.

Notes:
- If any solution other than DEF/AdBlue® is used, the warning lamp lights up and the buzzer sounds. Refer to “8. Combinations of lighting pattern of SCR system warning lamp and engine speed control” on page 2-25.
- The engine speed is limited if the DEF/AdBlue® solution is insufficient. Running the engine with insufficient DEF/AdBlue® causes the engine to idle.
- If the tank is faulty, please contact a Takeuchi service dealer for advice.

When DEF/AdBlue® is low or the tank is empty:
Corresponding to the DEF/AdBlue® level in the tank, the warning lamp lights up or flashes. Also, the engine output and RPM are limited.
To refill the tank under these conditions, refer to “Restarting when the DEF/AdBlue® level is low or the tank is empty” on page 6-14.

INSPECTING AND INFLATING THE TIRES

⚠ WARNING

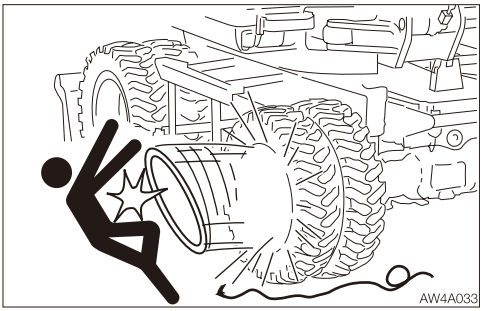

- Disassembling a tire or rim can cause an explosion, resulting in serious injury or death. Always ask a service shop or dealer for maintenance.
- Special tools and procedures are required to change tires. To do it safely, it must be done correctly. Changing tires is a job better done by your tire service company.
- Always maintain the correct tire pressure. Do not inflate the tires above the recommended pressure.
- Inspect tires and wheels every day. Do not operate the machine if the tire is underinflated or has cuts or bubbles, or if the rim is damaged.
- A rise in tire pressure during operation is normal, and should NOT be reduced.

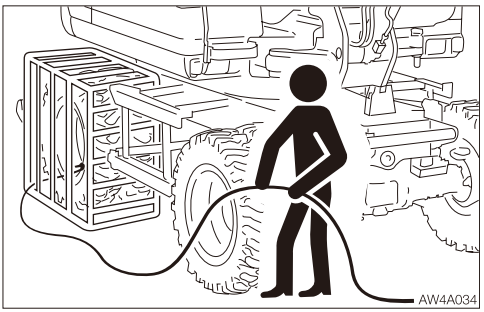

- When putting air in a tire, do so from a distance. Use a long hose with self-attaching chuck. Always stand behind the tread when adjusting tire pressure.
- Do not inflate tires with flammable gases or from systems using an alcohol injector.
- Never cut or weld on a wheel with an inflated tire mounted on it. This could cause an explosive decompression.
- Tires should be replaced only by an authorized person using the proper procedures and safety equipment. New or replacement tires and wheels should always be checked for proper size before mounting.
- Always use a cable restraint device or safety cage when reinflating a repaired tire.

Recommended air pressure must be maintained in every tire. Dairy checks assure that inflation is correct. If your periodic check discloses a tire that is continuously losing air, a leak is indicated and must be repaired.

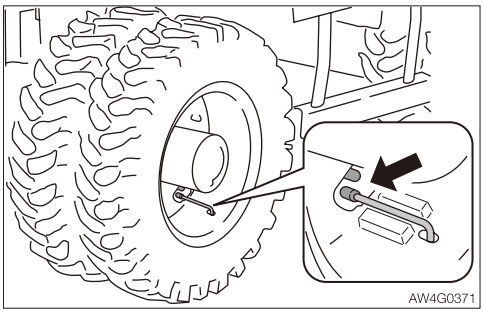

During your pressure checks, also inspect for:

- Objects wedged between duals or embedded in tires.
- Mismatched duals. Diameters should be equal as well as amount of tread wear.
- Any missing valve caps.
- Cuts, tears, and breaks that may need repair.
- Abnormal or uneven wear.
- Damaged or poor fitting rim or rim flanges.
- Projecting body hardware, loose fender bolts, spring clips - anything that could contact a tire.
- Any tire portions with no-grooves. Replace the tire with a new one if there is a portion with no grooves.

Inflating the tires

These instructions are for adding air to a tire which is already inflated. If the tire has lost all its air pressure, call in a qualified tire mechanic. The tire mechanic should use a tire inflation cage and the correct equipment to do the job.

1. Prepare the wheel.
   Before you add air to the tire, make sure it is correctly fitted on the machine or installed in a tire inflation cage.
2. Prepare the equipment.
   Use only an air supply system which includes a pressure regulator.
   Set the regulator no higher than above the recommended tire pressure. (See below).
   Use an air hose fitted with a self locking air chuck and remote shut-off valve.

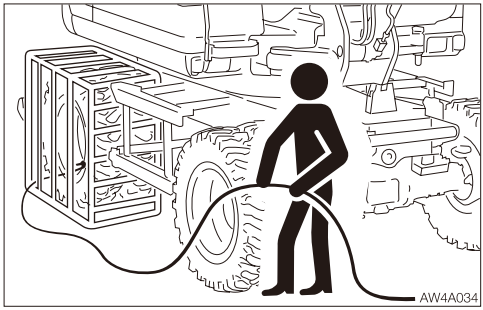

3. Add the air.
   Make sure that the air hose is correctly connected to the tire valve.
   Clear other people from the area.
   Stand behind the tread of the tire while adding the air.
   Inflate the tire to the recommended pressure. Do not over-inflate.
   · 8.25 - 20 Twin tires
   · Tire pressure: 650 kPa (94 psi) (6.5 bar)

   Gapless Tires (If equipped)
   · Tire pressure: 850 kPa (123 psi) (8.5 bar)

CHECKING THE WHEEL NUT TORQUES

⚠ WARNING

If, for whatever reason, wheel nut is renewed, all the nuts for that wheel must be changed as a set, since the remaining nuts may have been damaged.

On new machines, and whenever a wheel has been removed, check the wheel nut torques every two hours until they become proper.
Every day, before starting work, check that the wheel nuts are tight.

· Tightening torque:
  M20 X P1.5: 490 N·m (361.4 ft-lb.)

AFTER THE INITIAL 50 HOURS (ONLY FOR NEW MACHINES)

INSPECTING AND ADJUSTING THE COMPRESSOR BELT (AC)

⚠ WARNING

- Stop the engine and allow the machine to cool down before performing maintenance.
  - The engine, muffler, radiator, hydraulic lines, sliding parts and many other parts of the machine are hot immediately after the engine is stopped. Touching these parts will cause burns.
- The high-pressure pipes of the air conditioner can be very hot (80 to 120°C or 176 to 248°F). Be careful not to burn yourself.
- Before performing maintenance on top of the work bench, clean the footing and observe the following precautions to prevent falling.
  - Do not spill oil or grease.
  - Do not leave tools scattered around.
  - Watch your step when walking.
- Never jump down from the machine or the work bench. When getting on or off the machine or work bench, use the steps, handrails or work bench to support your body. Your weight should be evenly distributed among the three contact points (one hand and two feet or two hands and one foot).
- Do not stand on the dozer blade and perform maintenance work. Doing so is dangerous because of the unsteady foothold. Use the work bench.

IMPORTANT: Do not let any oil or grease get on the belt. It will cause the belt to slip, decrease the cooling capacity or shorten the service life of the air conditioner.

If the belt is too slack, it will slip and vibrate, resulting in decreased cooling capacity. The service life of the air conditioner also will be shortened. Adjust the belt tension to the standard value.

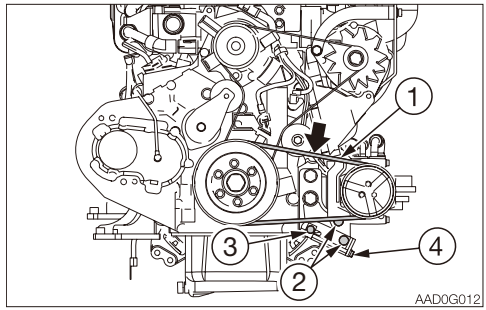

Inspection

1. Open the engine hood.
2. Measure the belt (1) tension using the belt tension gauge. The belt tension is normal if the belt tension gauge indicates the following values.
   343 ± 49 N (77 ± 11 lbf)

Adjustment

If the belt tension is not normal, tilt the compressor to adjust the tension.

1. Loosen the fixing bolts (2) and (3).
2. Turn the adjuster bolt (4) as follows.
   - Tighten: Clockwise
   - Loosen: Counterclockwise
3. Tighten the fixing bolts (2) and (3) upon completion of adjustment.

Note: When replacing with a new belt, run the engine at low idle speed for about 15 minutes to break in the new belt, before adjusting the tension again.
The belt tension must be adjusted as follows:
490 ± 98 N (110 ± 22 lbf)

Replacing

Replace the belt in the following cases:

- There are cuts or cracks.
- The belt is worn and touches the bottom of the V groove in the pulley.
- The belt stretched too loose to be adjusted.

REPLACING THE HYDRAULIC OIL RETURN FILTER

⚠ WARNING

- Stop the engine and allow each part of the machine to cool down before performing maintenance.
  - The engine, the hydraulic system and many other parts of the machine are hot immediately after the engine is stopped. Touching these parts will cause burns.
  - The hydraulic oil is also hot and under high pressure. Be careful not to touch the hydraulic oil when loosening the cap or plug. Working on the machine under these conditions could result in burns or injuries due to the hot oil spurting out.
- Oil may spurt out if caps or filters are removed or pipes are disconnected before releasing the pressure in the hydraulic system.
  - Press the air breather button to relieve the internal pressure from the tank.
  - When removing plugs or screws, or when disconnecting hoses, stand to the side and loosen them slowly to gradually release the internal pressure before removing.
- Before performing maintenance on top of the work bench, clean the footing and observe the following precautions to prevent falling.
  - Do not spill oil or grease.
  - Do not leave tools scattered around.
  - Watch your step when walking.
- Never jump down from the machine or the work bench. When getting on or off the machine or work bench, use the steps, handrails or work bench to support your body. Your weight should be evenly distributed among the three contact points (one hand and two feet or two hands and one foot).
- Do not stand on the dozer blade and perform maintenance work. Doing so is dangerous because of the unsteady foothold. Use the work bench.

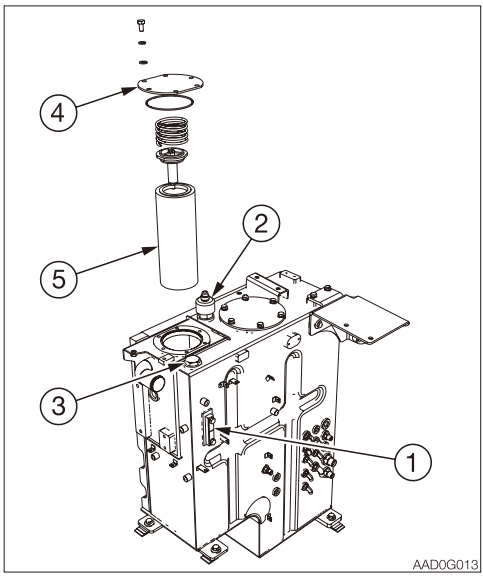

1. Open the right side cover.
2. Press the air breather button (2) to relieve the internal pressure from the tank.
3. Loosen the bolts and remove the flange (4).
4. Remove the return filter (5).
5. Install a new return filter.
6. Install the flange (4) on its original position.
7. Inspect the level with the sight gauge (1), and replenish if the level is too low.
   Refer to “Inspecting the hydraulic oil tank level and replenishing” on page 5-26.

REPLACING THE PILOT LINE FILTER

⚠ WARNING

- Stop the engine and allow each part of the machine to cool down before performing maintenance.
  - The engine, the hydraulic system and many other parts of the machine are hot immediately after the engine is stopped. Touching these parts will cause burns.
  - The hydraulic oil is also hot and under high pressure immediately after the engine is stopped. Be careful not to touch the oil when loosening the cap or plug. Working on the machine under these conditions could result in burns or injuries due to the hot oil spurting out.
- Oil may spurt out if caps or filters are removed or pipes are disconnected before releasing the pressure in the hydraulic system.
  - Press the air breather button to relieve the internal pressure from the tank.
  - When removing plugs or screws, or when disconnecting hoses, stand to the side and loosen them slowly to gradually release the internal pressure before removing.
- Before performing maintenance on top of the work bench, clean the footing and observe the following precautions to prevent falling.
  - Do not spill oil or grease.
  - Do not leave tools scattered around.
  - Watch your step when walking.
- Never jump down from the machine or the work bench. When getting on or off the machine or work bench, use the steps, handrails or work bench to support your body. Your weight should be evenly distributed among the three contact points (one hand and two feet or two hands and one foot).
- Do not stand on the dozer blade and perform maintenance work. Doing so is dangerous because of the unsteady foothold. Use the work bench.

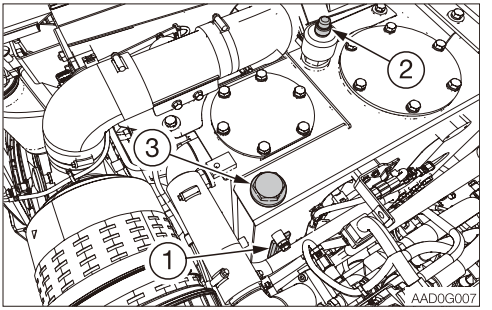

1. Open the right side cover.
2. Press the air breather button (2) to relieve the internal pressure from the tank.

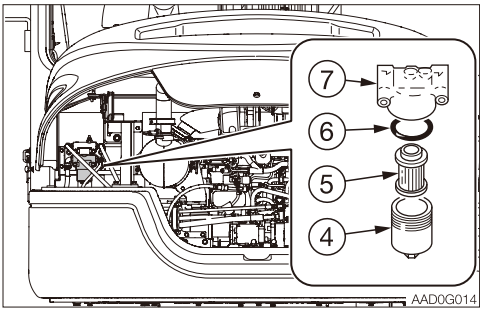

3. Open the engine hood.
4. Turn the case (4) counterclockwise and remove it.
5. Remove the element (5) and O-ring (6).
6. Clean the inside of the case (4).
7. Apply a thin layer of oil on the O-ring of the new filter.
8. Install the new element on the filter stand (7).
9. Apply a thin layer of oil on the new O-ring (6).
10. Install the new O-ring (6) and the case (4) on the filter stand (7).
    Tightening torque: 78.5 ± 4.9 N·m (57.9 ± 3.6 ft-lb)
11. Inspect the level with the sight gauge (1) and replenish if the level is too low.
    Refer to “Inspecting the hydraulic oil tank level and replenishing” on page 5-26.

REPLACING THE TRAVEL LINE FILTER

⚠ WARNING

- Stop the engine and allow each part of the machine to cool down before performing maintenance.
  - The engine, the hydraulic system and many other parts of the machine are hot immediately after the engine is stopped. Touching these parts will cause burns.
  - The hydraulic oil is also hot and under high pressure immediately after the engine is stopped.
    Be careful not to touch the oil when loosening the cap or plug. Working on the machine under these conditions could result in burns or injuries due to the hot oil spurting out.
- Oil may spurt out if caps or filters are removed or pipes are disconnected before releasing the pressure in the hydraulic system.
  - Press the air breather button to relieve the internal pressure from the tank.
  - When removing plugs or screws, or when disconnecting hoses, stand to the side and loosen them slowly to gradually release the internal pressure before removing.
- Before performing maintenance on top of the work bench, clean the footing and observe the following precautions to prevent falling.
  - Do not spill oil or grease.
  - Do not leave tools scattered around.
  - Watch your step when walking.
- Never jump down from the machine or the work bench. When getting on or off the machine or work bench, use the steps, handrails or work bench to support your body. Your weight should be evenly distributed among the three contact points (one hand and two feet or two hands and one foot).
- Do not stand on the dozer blade and perform maintenance work. Doing so is dangerous because of the unsteady foothold. Use the work bench.

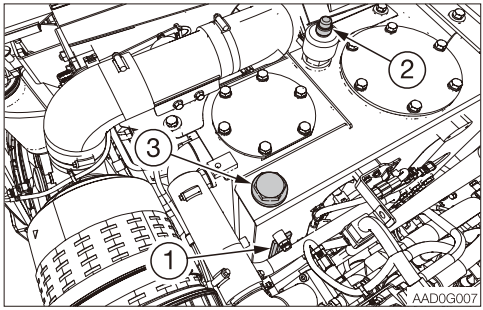

1. Open the right side cover.
2. Press the air breather button (2) to relieve the internal pressure from the tank.

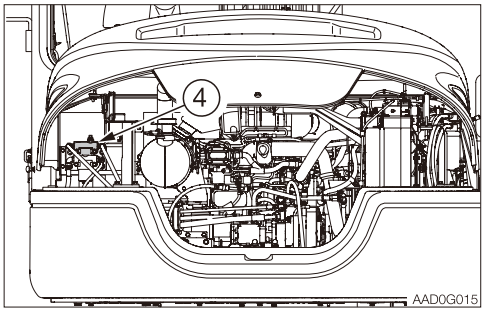

3. Open the engine hood.
4. Place a pan for catching the waste oil under the filter (4).

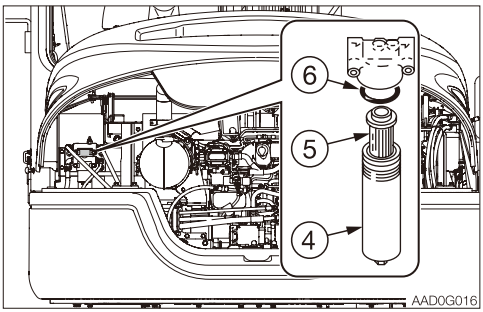

5. Turn the case (4) counterclockwise and remove it.
6. Remove the element (5) and O-ring (6).
7. Clean the inside of the case (4).
8. Apply a thin layer of oil on the O-ring mounting surface of a new filter.
9. Install a new element on the filter stand.
10. Apply a thin layer of oil on the new O-ring (6).
11. Install the new O-ring (6) and the case (4) on the filter stand.
    Tightening torque: 78.5 ± 4.9 N·m (57.9 ± 3.6 ft-lb)
12. Inspect the oil level with the sight gauge (1), and replenish if the level is too low.
    Refer to “Inspecting the hydraulic oil tank level and replenishing” on page 5-26.

EVERY 50 HOURS

LUBRICATING THE SLEW BEARING

⚠ WARNING

Do not slew while lubricating. Doing so is dangerous, as you may get caught in the machine.

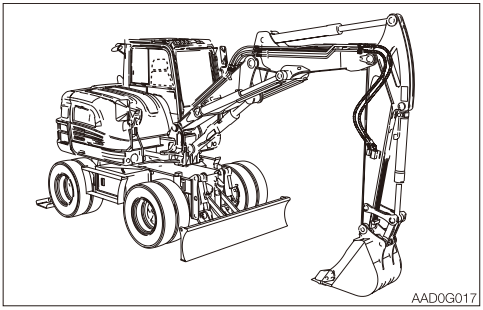

1. Stop the engine with the machine in the posture shown on the figure above.

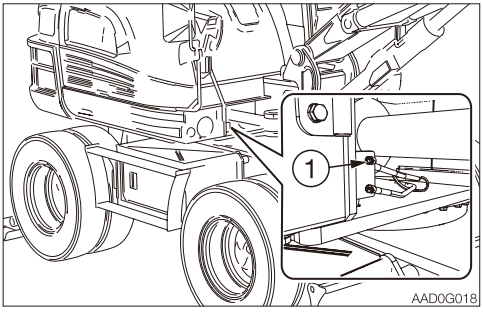

2. Use the grease gun to grease the grease fitting (1).

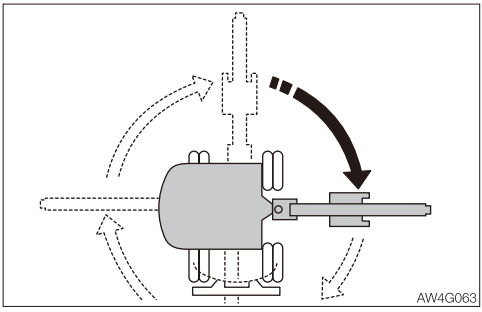

3. Start the engine, lift the bucket and slew clockwise 90°.
4. Lower the bucket to the ground, and then stop the engine.
5. Repeat the steps 2 to 4 above three times.
6. Wipe off the grease expelled from the slew bearing and grease fitting.

INSPECTING THE RAM LOCK CYLINDER (APPLYING RUST-INHIBITOR)

⚠ WARNING

Set the machine to the parking posture, stop the engine, remove the starter key and store it. Failure to do so may result in the machine moving abruptly, leading to serious injury or death.

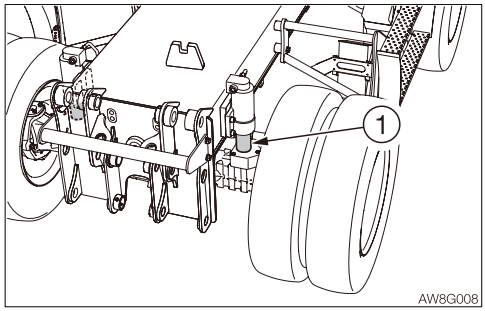

There are two ram lock cylinders on the front wheels. Apply rust-inhibitor to each rod (1) of the ram lock cylinders.

DRAINING THE WATER FROM THE FUEL TANK

⚠ WARNING

- **Do not smoke or permit open flames while handling fuel or working on the fuel system.**
- **Never remove the fuel cap or add fuel when the engine is running or still hot. Do not spill fuel on the hot surface of the machine.**
- **Fill the fuel tank in a well ventilated place.**
- **Do not fill the fuel tank to capacity. Allow room for oil expansion.**
- **Clean up spilled fuel immediately.**
- **Securely tighten the fuel filler cap.**
- **Use the correct grade of fuel for the operating season.**
- **Before performing maintenance on top of the work bench, clean the footing and observe the following precautions to prevent falling.**
  - **Do not spill oil or grease.**
  - **Do not leave tools scattered around.**
  - **Watch your step when walking.**
- **Never jump down from the machine or the work bench. When getting on or off the machine or work bench, use the steps, handrails or work bench to support your body. Your weight should be evenly distributed among the three contact points (one hand and two feet or two hands and one foot).**
- **Do not stand on the dozer blade and perform maintenance work. Doing so is dangerous because of the unsteady foothold. Use the work bench.**

Do the draining operation before starting the machine.

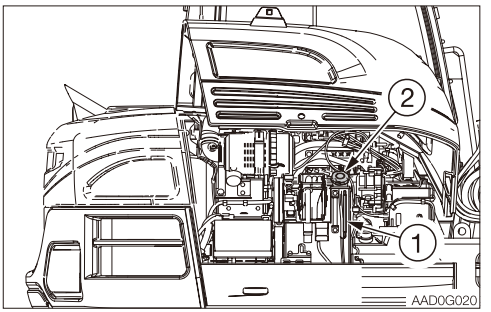

1. Open the right side cover.
2. Remove the fuel filler cap (2).

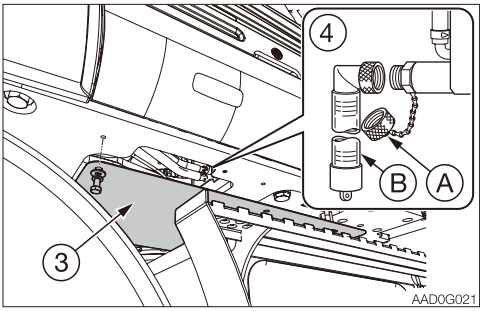

3. Remove the bolt and remove the under cover (3).
4. Place a pan under the drain valve (4).
5. Remove the cap (A), install the connector (B), and then drain the water and sediment buildup in the bottom of the tank (the water comes out when the screw is tightened).
6. Remove the connector (B) and install the cap (A).
7. Add fuel while watching the sight gauge (1).
8. Tighten the fuel filler cap (2).
9. Close the right side cover and lock it with the key.
10. Bleed air.

Bleeding air from the fuel system

Refer to “Bleeding air from the fuel system” on page 6-13.

Note: Air in the fuel system causes the engine to fail to start or to have problems. Bleed air when the fuel tank is emptied, using the same procedure above.

INSPECTING THE BATTERY

⚠ DANGER

- Do not use the battery when the fluid level is below the lower level limit. Doing so will hasten the deterioration of the internal portions of the battery and shorten the battery life. It also can cause rupturing (explosion).
- Batteries generate flammable hydrogen gas which may explode. Keep away from flame, sparks, fire or lighted cigarettes.
- Use a dampened cloth to clean above the fluid level line and check the fluid level. Do not clean with a dry cloth; otherwise it can cause static electricity to build up, resulting in ignition or explosion.
- Do not use the cable if it's connecting terminal is loose or corroded. If used, ignition or explosion may occur.

⚠ WARNING

- Wear protective goggle and clothing when working with batteries.
- Do not add the distilled water above the upper level limit. Doing so could cause the fluid to leak. This fluid can cause skin damage if contacted, or can cause the machine components to corrode.
- Batteries contain sulfuric acid which will damage eyes or skin if contacted.
  - If eye contact occurs, flush immediately with clean water and get prompt medical attention.
  - If accidentally swallowed, drink large quantities of water or milk and call a physician immediately.
  - If acid contacts skin or clothing, wash off immediately with a lot of water.
- Before performing maintenance on top of the work bench, clean the footing and observe the following precautions to prevent falling.
  - Do not spill oil or grease.
  - Do not leave tools scattered around.
  - Watch your step when walking.
- Never jump down from the machine or the work bench. When getting on or off the machine or work bench, use the steps, handrails or work bench to support your body. Your weight should be evenly distributed among the three contact points (one hand and two feet or two hands and one foot).
- Do not stand on the dozer blade and perform maintenance work. Doing so is dangerous because of the unsteady foothold. Use the work bench.

Inspection
Turn the starter switch to ON and check the battery voltage on the display. The battery is normal if the voltage is 24 V or more.
Refer to “(4) Data display” on page 2-43.

IMPORTANT: Check the fluid level of all cells following the steps below, even when the fluid level can be checked using the indicator.
IMPORTANT: The SCR system operates for up to two minutes after the starter switch is turned to the OFF position. When removing the batteries or electrical connectors for inspection or maintenance, wait for at least two minutes after the starter switch is turned to the OFF position. Otherwise, the system could fail.

Note: Under normal operating conditions, the maintenance-free battery does not require addition of water because of the special plate designed to minimize fluid loss. However, for those machines that are heavily used or operated under severe conditions (for example, in high ambient temperature), the fluid level often becomes low. If that is the case, check the fluid level of the maintenance-free battery and add water as needed.

1. Open the right side cover.

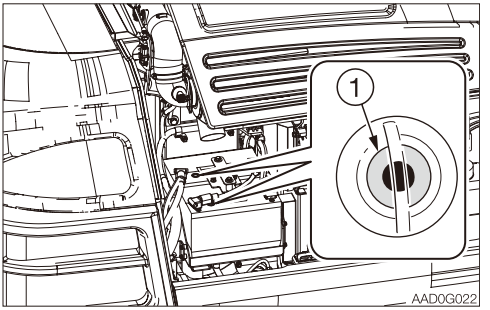

2. Inspect the indicator (1).
   - Green: Good
   - Black: Charging needed
   - White: Replace the battery
3. Check the battery terminal for looseness, dirt and corrosion.
4. Check the battery voltage. Confirm it is 24 V or more.
   Refer to “(4) Data display” on page 2-43.

AFTER THE INITIAL 100 HOURS (ONLY FOR NEW MACHINES)

REPLACING THE TRANSMISSION GEAR OIL

⚠ WARNING

- **Stop the engine and allow each part of the machine to cool down before performing maintenance.**
  - **The transmission is hot immediately after the engine is stopped. Touching it will cause burns.**
  - **The gear oil is also hot and under high pressure immediately after the engine is stopped.**
    Be careful not to touch the oil when loosening the plugs. Working on the machine under these conditions could result in burns or injuries.
- **The pressure in the reduction gear case of transmission may cause oil or the plug to fly out. Loosen the plug slowly to release the pressure.**

1. Park the machine on a level surface and stop the engine.

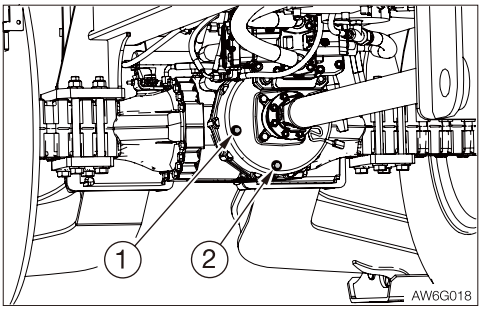

2. Place a pan under the plug (2) to catch the waste oil.
3. Remove the plug (2) and drain the oil.
4. Tighten the plug (2).
   - Tightening torque: 35 to 50 N·m (25.8 to 36.9 ft-lb.)
5. Add oil through the hole of the plug (1) until the oil flows from the hole.
6. Tighten the plug (1).
   - Tightening torque: 35 to 50 N·m (25.8 to 36.9 ft-lb.)

REPLACING THE DIFFERENTIAL GEAR OIL

⚠ WARNING

- **Stop the engine and allow each part of the machine to cool down before performing maintenance.**
  - **The differentials are hot immediately after the engine is stopped. Touching them will cause burns.**
  - **The gear oil is also hot and under high pressure immediately after the engine is stopped.**
    Be careful not to touch the oil when loosening the plugs. Working on the machine under these conditions could result in burns or injuries.
- **The pressure in the gear case of differentials may cause oil or the plug to fly out. Loosen the plug slowly to release the pressure.**

1. Park the machine on a level surface and stop the engine.

<Front>

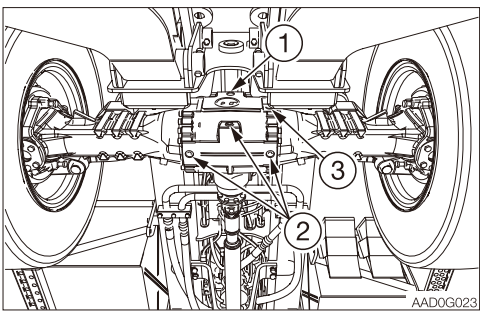

<Rear>

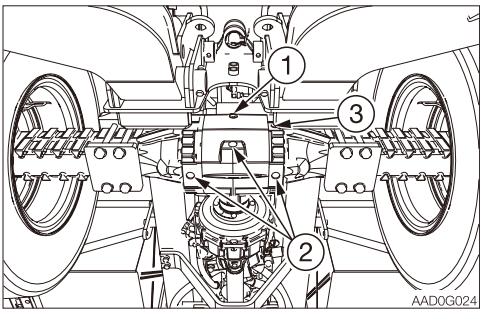

2. Place a pan under the plug (2) to catch the waste oil.
3. Remove the plug (1), (2) and (3) and drain the oil.
4. Tighten the plug (2).
   · Tightening torque: 35 to 50 N·m (25.8 to 36.9 ft-lb.)
5. Add oil through the hole of the plug (1) until the oil flows from the hole (3).
6. Tighten the plug (1) and (3).
   · Tightening torque: 35 to 50 N·m (25.8 to 36.9 ft-lb.)

REPLACING THE HUB GEAR OIL

⚠ WARNING

- **Stop the engine and allow each part of the machine to cool down before performing maintenance.**
  - **The hubs are hot immediately after the engine is stopped. Touching them will cause burns.**
  - **The gear oil is also hot and under high pressure immediately after the engine is stopped. Be careful not to touch the oil when loosening the plugs. Working on the machine under these conditions could result in burns or injuries.**
- **The pressure in the reduction gear case of hubs may cause oil or the plug to fly out. Loosen the plug slowly to release the pressure.**

1. Set the hub so that the plug (1) is directly below the hub.
2. Park the machine on a level surface and stop the engine.

<Front inner side>

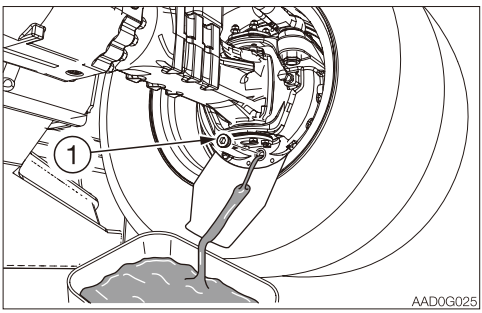

<Outer side for both>

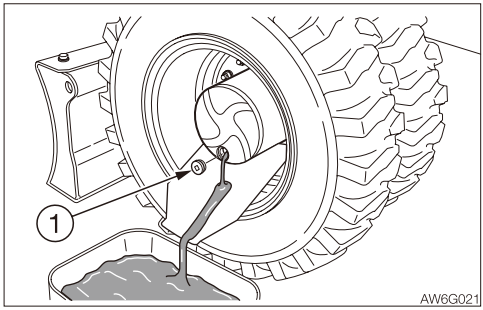

3. Place a pan under the plug (1) to catch the waste oil.
4. Remove the plug (1) and drain the oil.

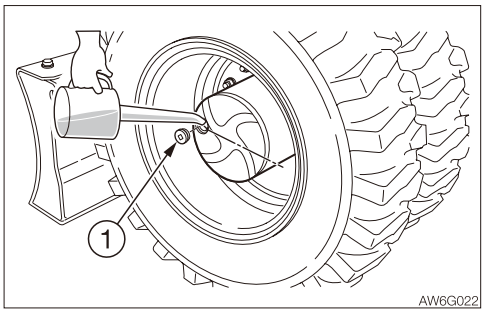

5. Set the hub so that the plug (1) is in a level position.
6. Add oil through the hole of the plug (1) until the oil flows from the hole.
7. Tighten the plug (1).
   - Tightening torque: 35 to 50 N·m (25.8 to 36.9 ft-lb.)

EVERY 250 HOURS

INSPECTING AND ADJUSTING THE COMPRESSOR BELT (AC)

Refer to “Inspecting and adjusting the compressor belt (AC)” on page 5-37.

LUBRICATING THE UNDERCARRIAGE

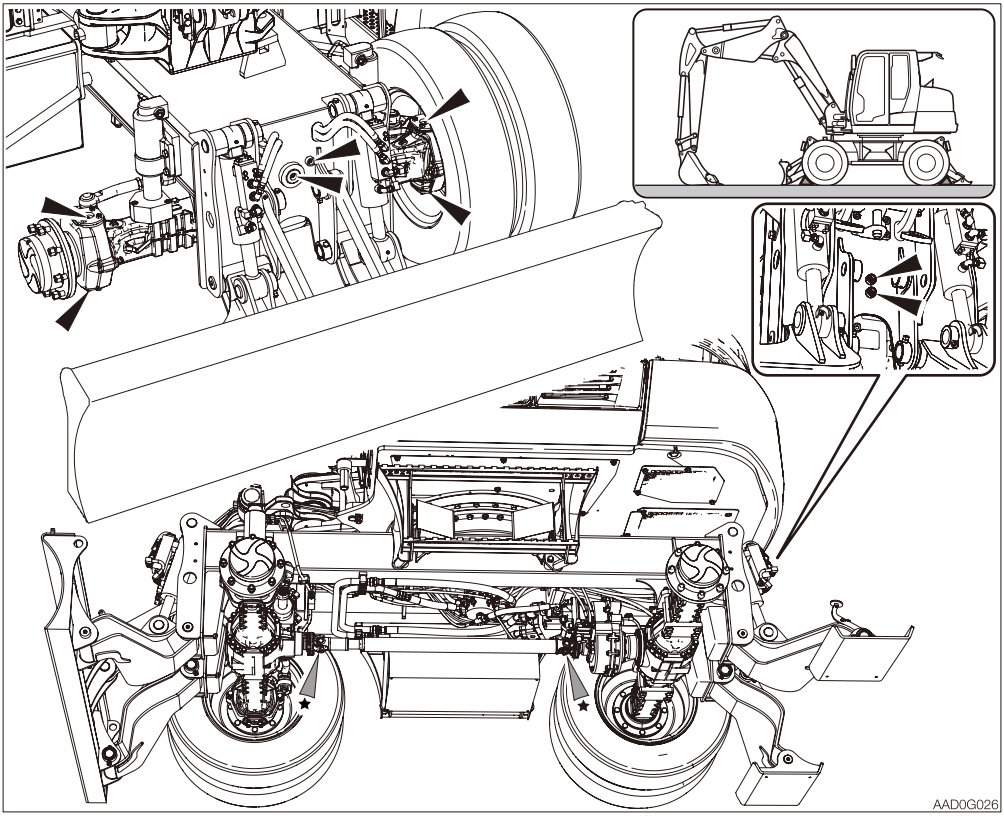

1. Keep the machine configuration as shown in the diagram above, lower the working equipment to the ground, and then stop the engine.
2. Use the grease gun to lubricate the grease fittings.
   - Type of grease : Molybdenum grease
     *: Lithium based grease
3. Wipe off the excess grease.