CAN DEVICE ERROR CODE LIST FOR TFM

IMPORTANT: The CAN device error code is not shown on the display. Check it with the TFM.

MULTI-FUNCTION GRIP

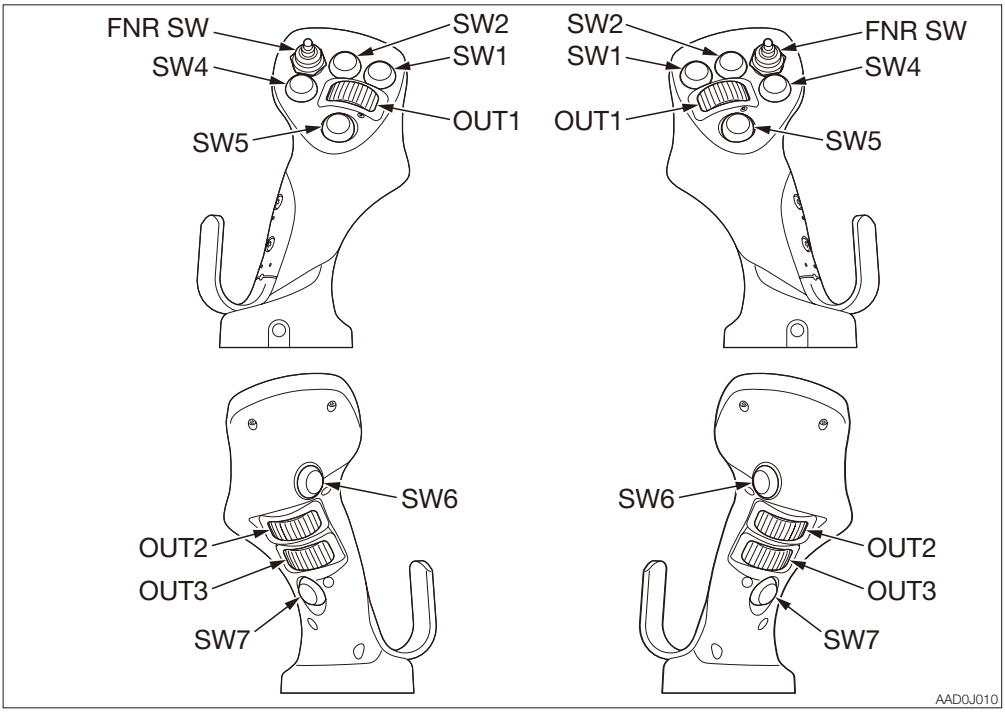

SPN	FMI	Input	Description
2662	3	OUT1	Failure: Voltage Above Normal/Voltage Too High
2662	4	OUT1	Failure: Voltage Below Normal/Voltage Too Low
2662	14	OUT1	Failure: Special Instruction/Redundant Input Failure
2663	3	OUT2	Failure: Voltage Above Normal/Voltage Too High
2663	4	OUT2	Failure: Voltage Below Normal/Voltage Too Low
2663	14	OUT2	Failure: Special Instruction/Redundant Input Failure
2664	3	OUT3	Failure: Voltage Above Normal/Voltage Too High
2664	4	OUT3	Failure: Voltage Below Normal/Voltage Too Low
2664	14	OUT3	Failure: Special Instruction/Redundant Input Failure
2685	14	SW7	Failure: Special Instruction/Redundant Input Failure
2686	14	SW6	Failure: Special Instruction/Redundant Input Failure
2687	14	SW5	Failure: Special Instruction/Redundant Input Failure
2688	14	SW4	Failure: Special Instruction/Redundant Input Failure
2689	14	SW3 or FNR	Failure: Special Instruction/Redundant Input Failure
2690	14	SW2	Failure: Special Instruction/Redundant Input Failure
2691	14	SW1	Failure: Special Instruction/Redundant Input Failure
2694	14	FNR Switch F	Failure: Special Instruction/Redundant Input Failure
2695	14	FNR Switch N	Failure: Special Instruction/Redundant Input Failure
2696	14	FNR Switch R	Failure: Special Instruction/Redundant Input Failure

SPN	FMI	Description
516096	31	Fault(s) detected by CPU1.
516097	31	CAN fault(s) detected by CPU1.
516098	31	Fault(s) detected by CPU2.
516099	31	CAN fault(s) detected by CPU2.
516100	31	Waiting for CPU2 after “power on” resulted in a timeout.
516101	31	SPI communication between CPU1 and CPU2 resulted in a timeout.

ELECTRONIC STEERING VALVE

Definitions and Abbreviates

AD	Analogue-to-Digital
AD1-AD3	Analogue Input 1-3 on PVED-CLS
AUX	Auxiliary
CAN	Controller Area Network
EEPROM	Electrically Erasable Programmable Read-Only Memory
EH	Electro-Hydraulic
EHi	Electro-Hydraulic Inline Valve
EHPS	Electro-Hydraulic Power Steering
FDA	Fault Detection Algorithm
FMI	Failure Mode Identifier
GPS	Global Positioning System and Danfoss “short call-name” for Auto-guidance
IMD	Internal Monitoring Disengage
LVDT	Linear Variable Differential Transformer
MMI	Man-Machine Interface
OSPCX	Orbital Steering Product - Including valve function and X-release
OSPE	Orbital Steering Product – Electro-Hydraulic
PVED-CLS	Proportional Valve Electronic Digital – Closed Loop Steering
SASA	Steering Angle Sensor - Absolute
SEHS	Safe Electro-Hydraulic Steering
SPN	Suspect Parameter Number
STW	Steering Wheel
SVC	Solenoid Valve Control
WAS	Wheel Angle Sensor

SPN	Signal Name	FMI
627	Vbat	1 - Data valid, but below normal operational range - Most severe level
		3 - Voltage above normal or short-circuit to high source
		4 - Voltage below normal or short-circuit to low source
628	Flash test	12 - Bad intelligent device or component
1557	RAM test	12 - Bad intelligent device or component
1562	Incompatible Bootloader	31 - Condition exists
1563	Software Mismatch	31 - Condition exists
298965	PSM task	11 - Unknown root-cause
298966	Program sequence monitoring	11 - Unknown root-cause
298967	CAN bus	0 - Data valid, but above normal operational range - Most severe level
		11 - Unknown root-cause
		12 - Bad intelligent device or component
		15 - Data valid, but above normal operating range - Least severe level
		19 - Received network data in error
298968	Interpolation	11 - Unknown root-cause
299001	I2C communication	12 - Bad intelligent device or component
299002	Variable truncation	11 - Unknown root-cause
299004	Division by zero	11 - Unknown root-cause
299005	Software Initialization	11 - Unknown root-cause
299023	Coils Supply Switch	12 - Bad intelligent device or component
		19 - Received network data in error
		2 - Data erratic, intermittent or incorrect
299029	EEPROM	12 - Bad intelligent device or component
520192	Analogue sensor connected to AD1	13 - Out of calibration
		25 - Signal crosscheck failed
		3 - Voltage above normal or short-circuit to high source
		4 - Voltage below normal or short-circuit to low source
520193	Analogue sensor connected to AD2	3 - Voltage above normal or short-circuit to high source
		4 - Voltage below normal or short-circuit to low source

CAN DEVICE ERROR CODE LIST FOR TFM

SPN	Signal Name	FMI
520195	Temperature Sensor	0 - Data valid, but above normal operational range - Most severe level
		1 - Data valid, but below normal operational range - Most severe level
		16 - Data valid, but above normal operating range - Moderately severe level
520197	Sensor_+5V	3 - Voltage above normal or short-circuit to high source
		4 - Voltage below normal or short-circuit to low source
520198	Cut-Off supply	3 - Voltage above normal or short-circuit to high source
		4 - Voltage below normal or short-circuit to low source
		5 - Current below normal or open circuit
		6 - Current above normal or grounded circuit
		8 - Abnormal frequency or pulse width or period
520199	SASA sensor	19 - Received network data in error
		2 - Data erratic, intermittent or incorrect
		22 - Message missing
		9 - Abnormal update rate
520200	Vehicle Speed sensor	19 - Received network data in error
		2 - Data erratic, intermittent or incorrect
		22 - Message missing
		9 - Abnormal update rate
520201	MMI	19 - Received network data in error
		2 - Data erratic, intermittent or incorrect
		22 - Message missing
		9 - Abnormal update rate
520202	Auxiliary steering device	19 - Received network data in error
		2 - Data erratic, intermittent or incorrect
		22 - Message missing
		9 - Abnormal update rate
520203	Vehicle speed triggered EH-steering shut-off (Safety function 3)	31 - Condition exists

SPN	Signal Name	FMI
520204	EH-main spool monitoring	1 - Data valid, but below normal operational range
		11 - Other failure mode
		18 - Data valid, but below normal operational range - Low severity INFO level
		23 - Unintended Steering
		28 - Not in neutral at Power-up
		7 - Mechanical system not responding or out of adjustment
520205	Fault Detection Algorithm Monitoring	23 - Unintended Steering
520206	Safe ON-Road Monitoring	2 - Data erratic, intermittent or incorrect
		22 - Message missing
		25 - Signal crosscheck failed
		30 - Stuck Closed
520207	Road switch resistance monitoring	2 - Data erratic, intermittent or incorrect
		22 - Message missing
		25 - Signal crosscheck failed
520208	Demanded safe state	31 - Condition exists
520209	Loop-back operation status message	19 - Received network data in error
		2 - Data erratic, intermittent or incorrect
		9 - Abnormal update rate
520210	Cut-off solenoid	19 - Received network data in error
		29 - Stuck Open
		30 - Stuck Closed
520211	Overvoltage supervisor	12 - Bad intelligent device or component
		19 - Received network data in error
520212	LVDT sinus signal	8 - Abnormal frequency or pulse width or period
520213	SPI Communication	11 - Unknown root-cause
		2 - Data erratic, intermittent or incorrect
520214	Flow command crosscheck	2 - Data erratic, intermittent or incorrect
		25 - Signal crosscheck failed
520215	Wheel angle crosscheck	25 - Signal crosscheck failed
520216	Vehicle Speed sensor speed crosscheck	25 - Signal crosscheck failed
520217	STW sensor Position crosscheck (SASA)	25 - Signal crosscheck failed

SPN	Signal Name	FMI
520218	Auxiliary steering device Steering angle crosscheck	25 - Signal crosscheck failed
520219	Executed steering device/program crosscheck (application state)	25 - Signal crosscheck failed
520220	STW sector CRC check for 1.98/2.02	2 - Data erratic, intermittent or incorrect
520224	MMI flag crosscheck	25 - Signal crosscheck failed
520225	EH-Main spool Position crosscheck	25 - Signal crosscheck failed
520227	STW sensor Speed crosscheck (SASA)	25 - Signal crosscheck failed
520228	WAS CAN sensor	13 - Out of calibration
		19 - Received network data in error
		2 - Data erratic, intermittent or incorrect
		22 - Message missing
		9 - Abnormal update rate
520229	Soft error	31 - Condition exists
520230	Auxiliary steering device Steering angle velocity crosscheck	25 - Signal crosscheck failed
520231	Auxiliary steering device Joystick position crosscheck	25 - Signal crosscheck failed
520232	EEPROM Hydraulic config	14 - Special instructions
		2 - Data erratic, intermittent or incorrect
520233	EEPROM SEHS FDA	14 - Special instructions
		2 - Data erratic, intermittent or incorrect
520234	EEPROM Valve calibration data	14 - Special instructions
		2 - Data erratic, intermittent or incorrect
520235	EEPROM CAN WAS Calibration data	14 - Special instructions
		2 - Data erratic, intermittent or incorrect
520236	EEPROM Analogue Sensor Calibration data	14 - Special instructions
		2 - Data erratic, intermittent or incorrect
520237	EEPROM Peripherals config	14 - Special instructions
		2 - Data erratic, intermittent or incorrect

SPN	Signal Name	FMI
520238	EEPROM SEHS Protocol data	14 - Special instructions
		2 - Data erratic, intermittent or incorrect
520239	EEPROM Internal monitoring	14 - Special instructions
		2 - Data erratic, intermittent or incorrect
520240	PVED-CLS Spare part	31 - Condition exists
520241	EEPROM Vehicle geometry	14 - Special instructions
		2 - Data erratic, intermittent or incorrect
520242	EEPROM GPS config	14 - Special instructions
		2 - Data erratic, intermittent or incorrect
520243	EEPROM STW config	14 - Special instructions
		2 - Data erratic, intermittent or incorrect
520244	EEPROM AUX config	14 - Special instructions
		2 - Data erratic, intermittent or incorrect
520245	EEPROM Auto-Calibration config sector	14 - Special instructions
		2 - Data erratic, intermittent or incorrect
520246	Invalid sensor configuration	31 - Condition exists
520247	Auxiliary steering device Joystick trim value crosscheck	25 - Signal crosscheck failed
520248	Auxiliary steering device Joystick enable signal crosscheck	25 - Signal crosscheck failed
520249	IMD status crosscheck	25 - Signal crosscheck failed
520577	SVC Parameters	2 - Data erratic, intermittent or incorrect
520579	EEPROM VPS data	14 - Special instructions
		2 - Data erratic, intermittent or incorrect
520582	+5V	2 - Data erratic, intermittent or incorrect
520583	LVDT calculation	2 - Data erratic, intermittent or incorrect
520585	Vref generation	2 - Data erratic, intermittent or incorrect
520586	GND level	3 - Voltage above normal or short-circuit to high source
520588	LVDT demo A	2 - Data erratic, intermittent or incorrect
520589	LVDT demo B	2 - Data erratic, intermittent or incorrect
520592	Too many errors	0 - Data valid, but above normal operational range - Most severe level

OTHER SYMPTOMS

For symptoms not included in the table below or if the problem persists after the proper remedies have been taken, consult your sales or service dealer.

Symptoms	Major causes	Remedies
Operating levers or pedals do not move smoothly	• Insufficient grease on the operating levers or pedals.	• Grease the levers and/or pedals. Refer to page 5-87.
Steering operation is not possible.	• Steering device is faulty	• Consult your sales or service dealer.
Operation of hoe attachment, dozer blade, auxiliary hydraulics, slewing or traveling is not possible.	• Safety lock lever is raised (locked)	• Lower (release) the safety lock lever. Refer to page 2-84.
	• Fuse is blown	• Replace the fuse. Refer to page 6-7.
Digging force is insufficient	• Hydraulic oil level too low	• Add to the specified level. Refer to page 5-26.
	• Hydraulic oil is not warm enough	• Perform the warm-up. Refer to pages 3-10 to 3-11.
	• Air cleaner is clogged	• Clean the air cleaner. Refer to page 5-28.
	• Hydraulic oil is not of suitable type	• Replace the hydraulic oil. Refer to page 5-75.
Traveling is not possible or not smooth	• Stones or foreign objects are stuck	• Remove the foreign object.
	• Blake pedal is locked	• Release the brake pedal lock. Refer to page 2-87.
	• Parking brake is activated	• Turn off the parking brake switch Refer to page 2-68. • Release the safety lock lever Refer to page 2-84.

Symptoms	Major causes	Remedies
Machine veers to the right/left	• Stones or foreign objects are stuck	• Remove the foreign object.
	• Tires have different air pressure in them.	• Make sure tires have the same air pressure. Refer to page 5-34.
Travel speed cannot be changed	• Fuse is blown	• Replace the fuse. Refer to page 6-7.
Slewing is not possible or not smooth	• Insufficient grease on slew bearing	• Grease the bearing. Refer to page 5-43.
Hydraulic oil temperature is too high	• Hydraulic oil level too low	• Add up to the specified level. Refer to page 5-26.
Starter motor turns but engine does not start	• Insufficient fuel	• Add fuel. Refer to page 5-26.
	• Air in fuel system	• Bleed air. Refer to page 6-13.
	• Water in fuel system	• Drain water. Refer to page 5-44.
	• Fuel is frozen.	• Warm the fuel pipe with hot water or wait until the ambient temperature becomes high.
	• Engine control system is faulty.	• Adjust or repair (ask your sales or service dealer).
	• Fuel line is faulty.	• Adjust or repair (ask your sales or service dealer).
	• Preheating device is faulty.	• Adjust or repair (ask your sales or service dealer).

Symptoms	Major causes	Remedies
Engine exhaust is white or bluish	• Excessive engine oil	• Adjust to the specified level. Refer to page 5-24.
	• Insufficient engine warm-up.	• Perform the warm-up operation. Refer to page 3-6.
	• Engine control system is faulty.	• Adjust or repair (ask your sales or service dealer).
	• Fuel line is faulty.	• Adjust or repair (ask your sales or service dealer).
	• Prolonged idling (approx. two hours or more)	• Increase the engine RPM and check for smoke.
	• Poor fuel	• Replace the fuel.
Engine exhaust is occasionally black	• Air cleaner is clogged	• Clean the air cleaner. Refer to page 5-28.
	• Engine control system is faulty.	• Adjust or repair (ask your sales or service dealer).
	• Fuel line is faulty.	• Adjust or repair (ask your sales or service dealer).
	• Clogging in the exhaust line.	• Adjust or repair (ask your sales or service dealer).
Irregular noise is produced from the engine (combustion or mechanical noise)	• Low quality fuel is being used	• Replace the fuel.
	• Engine is overheating	• Refer to “If the engine overheats” on page 6-3.
	• Damage inside the muffler	• Replace the muffler. For replacement, ask your sales or service dealer.

LOWERING THE BOOM TO THE GROUND

If the hoe attachment must be lowered to the ground while the engine is stopped, use the following procedure.

Perform this operation within 10 minutes after the engine stopping.

1. Sit at the operator's seat.
2. Turn the starter switch to the ON position.
3. Lower the safety lock lever to the unlock position.
4. Slowly push the operating lever forward to lower the boom.

TOWING

⚠ WARNING

When towing, serious injury or death could result, if performed incorrectly or the wire rope being used is inappropriate or not properly inspected.

- **It becomes dangerous if the wire rope breaks or becomes disengaged. Use a wire rope appropriate for the required tractive force.**
- **Do not use a wire rope that is kinked, twisted or otherwise damaged.**
- **Do not apply heavy loads abruptly to the wire rope.**
- **Wear safety gloves when handling the wire rope.**
- **Make sure there is an operator on the machine being towed as well as on the machine that is towing.**
- **Never tow on slopes.**
- **Do not let anyone come near to the wire rope while towing.**
- **The machine should be towed only when it gets stuck in mud.**
- **Be sure to use a towing truck with sufficient braking power.**

IMPORTANT: Release the parking brake before recovering a machine if its engine does not start or if the machine does not run. If not, the hydraulic devices could be damaged. Doing so could damage the hydraulic devices.

Release the parking brake

In case of hydraulic oil pressure failure or hydraulic motor failure, the emergency actuator disconnects the reduction gear clutch so that the emergency machine towing can be performed.

To ensure that a rigid towing rod and a tow-truck with sufficient braking power are used.
No servo-assisted steering - only manual steering with great force.

1. Depress the brake pedal all the way down to lock it.
2. Chock the wheels to secure the machine.

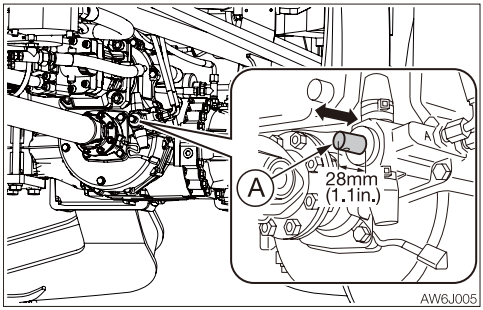

3. Move the transmission shaft (A) to and fro to set the gear to the neutral position. Insert a bar into the hole (8 dia.) on the tip of the shaft (A) and move it to and fro.

   Neutral position ....28mm (1.1 in.)

   ① ① .....17mm (0.66 in.)

   ② ② .....39mm (1.54 in.)

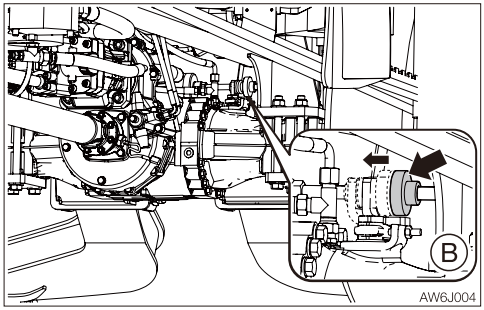

4. Forcibly release the parking brake (B).

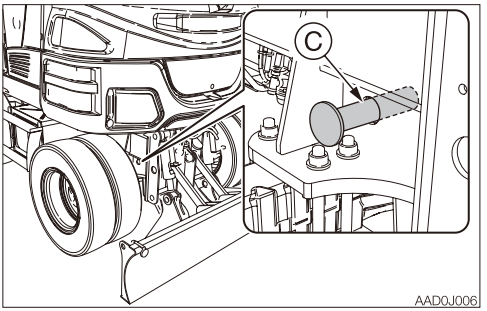

5. Insert the pipe from the outer hole of the lower frame.
   Special tool (C) part number:
   05692-00096

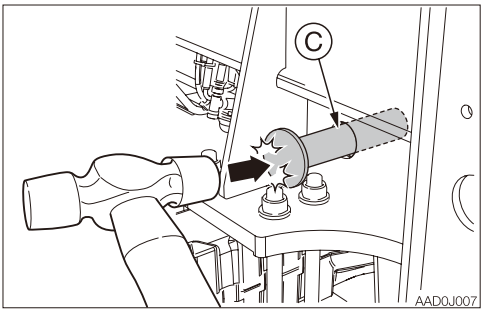

6. Hammer the tool toward the brake cylinder several times while supporting the special tool (C) by hand.

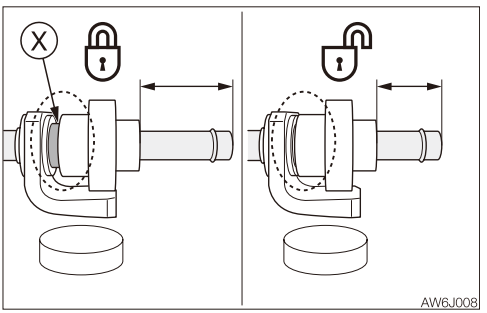

7. Once the brake is released, the shaft is pulled to clear the clearance (X).

Note: The released parking brake is returned to the original position once the engine is restarted.

Towing the machine

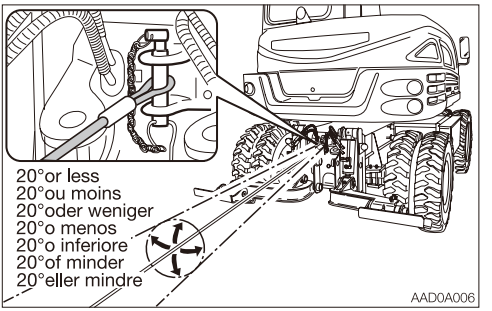

- Permissible forces: 176.4 kN (39655 lbf)

1. Attach the wire rope to the shackle.
2. Make sure that the wire rope is horizontal and is lined up straight with the travel frame.
3. Remove the chocks, and then release the brake lock.
4. Move the machine to tension the wire rope.
5. Move the machine slowly and tow.
   · Towing speed: 2 km/h (1.24 mph) or less
   · Towing distance: 5 km (3.1 miles) or less

IF THE CAB IS DAMAGED

⚠ WARNING

Immediately replace the damaged cab. Serious injury or death may occur if the machine is operated with damaged cab. Do not operate the machine until the replacement is complete. Do not try to repair the damaged cab by welding. Doing so could endanger the safety of the cab.

Cab part number: 05686-00492

SPECIFICATIONS



BASIC SPECIFICATIONS

Type			2-Piece boom
MASS			
Operating mass	kg (lb)	Machines with outriggers	10625(23425)
		Equipped with a rear blade	10225(22540)
Maximum operating mass**	kg (lb)		12000(26455)
PERFORMANCE			
Bucket capacity (Standard bucket)	m^3 (cu. ft.)	Heaped	0.245 (8.65)
		Struck	0.185 (6.53)
Slew speed	min^{-1} (rpm)		9.7 (9.7) 8.9 (8.9)****
Travel speed	km/h (mph)	Low-speed travel 1	0 to 5.6 (3.5) / 0 to 5.6 (3.5)*
		High-speed travel 1	0 to 15.6 (9.7) / 0 to 10.5 (6.5)*
		Low-speed travel 2	0 to 10.5 (6.5) / 0 to 10.5 (6.5)*
		High-speed travel 2	0 to 29.1 (18.1) / 0 to 20.0(12.4)*
Gradeability	(degrees)		35
ENGINE			
Manufacturer and model			DEUTZ TCD3.6L4
Rated output	Net (ISO 14396)	kW/min^{-1} (hp/rpm)	85/2200 (114/2200)
Displacement		ml (cu.in.)	3621 (221)
Amount of CO_2 emission***		g/kWh	690.7
Starter		V-kW	24 - 4.0
Alternator		V-kW	28 - 2.24
Battery (IEC 60095-1)		V-A·h	12 – 90 X 2
CCA		A	710

*: for Germany
**: This value is the maximum safe mass for operation specified by the manufacturer. Optional accessories can be added until the operating mass exceeds this value.
***: The amount of CO_2 emission refers to the value obtained by testing the parent engine representing the engine type (engine family member) being used; it shall not guarantee the performance of the machine.
****: Applicable machine models 195001187 or later

Unit:dB (A)

NOISE EMISSION		
DECLARED SINGLE-NUMBER NOISE EMISSION VALUES in accordance with ISO 4871*		
Sound power level (2000/14/EC)	Guaranteed sound power level	99
Emission sound pressure level at the operator's position**	Emission sound pressure level	76
Measured values and Uncertainties		
Sound power level (2000/14/EC)	Measured sound power level	98
	uncertainty	1
Emission sound pressure level at the operator's position**	Measured emission sound pressure level	73
	uncertainty	2

* : Declared single-number noise emission values are the sum of measured values and the associated uncertainty.
** : Values determined according to noise test code given in ISO 6396.

MACHINE DIMENSIONS

2-Piece boom (Two cylinders) (Equipped with a rear blade)

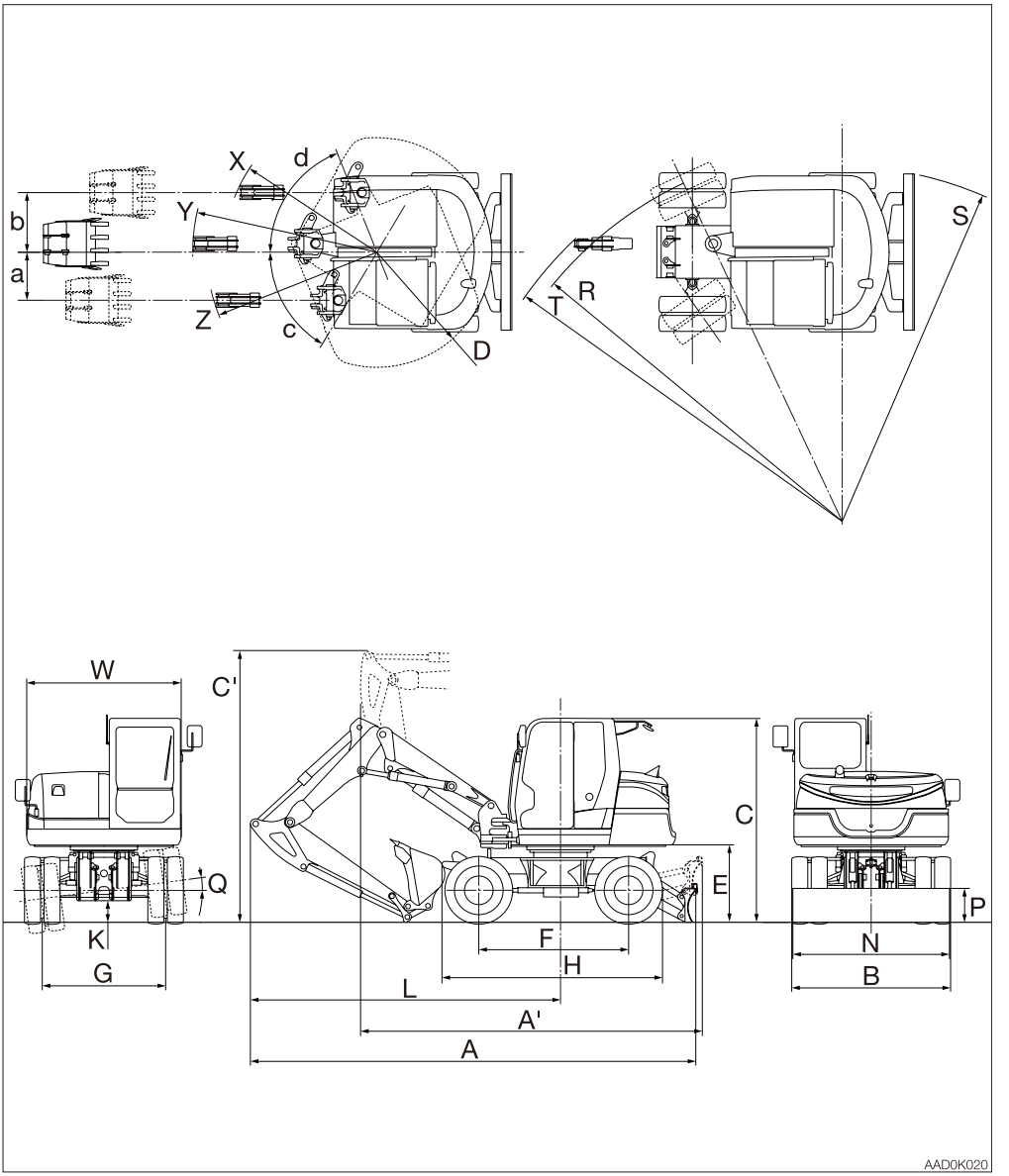

2-Piece boom (Two cylinders) (Equipped with a rear blade)

Unit: mm (inch)

	Item	2-Piece boom
A	Overall length	6555 (258.1)
A'	Overall length (Road travel posture)	5580 (219.7)
B	Overall width	2320 (91.3) 2380 (93.7)*
B'	Overall width (Equipped with mud guard)	2360 (92.9) 2410 (94.9)*
C	Overall height	3020 (118.9) 3055 (120.3)**
C'	Overall height (Road travel posture)	3975 (156.5)
D	Slew radius	1690 (66.5)
E	Clearance height under upperstructure	1115 (43.9)
F	Wheel base	2200 (86.6)
G	Tread	1810 (71.3)
H	Overall length of undercarriage	3230 (127.2)
K	Ground clearance of undercarriage	320 (12.6)
L	Front distance to axis of rotation	4550 (179.1)
N	Dozer blade width	2300 (90.6)
P	Dozer blade height	500 (19.7)
Q	Swing angle of axles	6.5°
Q'	Swing angle of axles (Equipped with mud guard)	3.5°
R	Minimum turning radius (Tire)	5725 (225.4) 3365 (132.5)***
S	Minimum turning radius (Dozer blade)	5470 (215.4) 3900 (153.5)***
T	Outside machine clearance radius	6290 (247.6) 4115 (162.0)***
W	Overall width of upperstructure	2270 (89.4)
X	Minimum radius of equipment at maximum front offset (Right)	2010 (79.1)
Y	Minimum radius of equipment and attachment	2445 (96.3)
Z	Minimum radius of equipment at maximum front offset (Left)	2255 (88.8)
a	Offset distance of bucket (right swing)	705 (27.8)
b	Offset distance of bucket (left swing)	875 (34.4)
c	Boom swing angle (Right)	59°
d	Boom swing angle (Left)	68°

*:Gapless tire specification
**:With roof guard
***:4WS mode

2-Piece boom (Two cylinders) (Machines with outriggers)

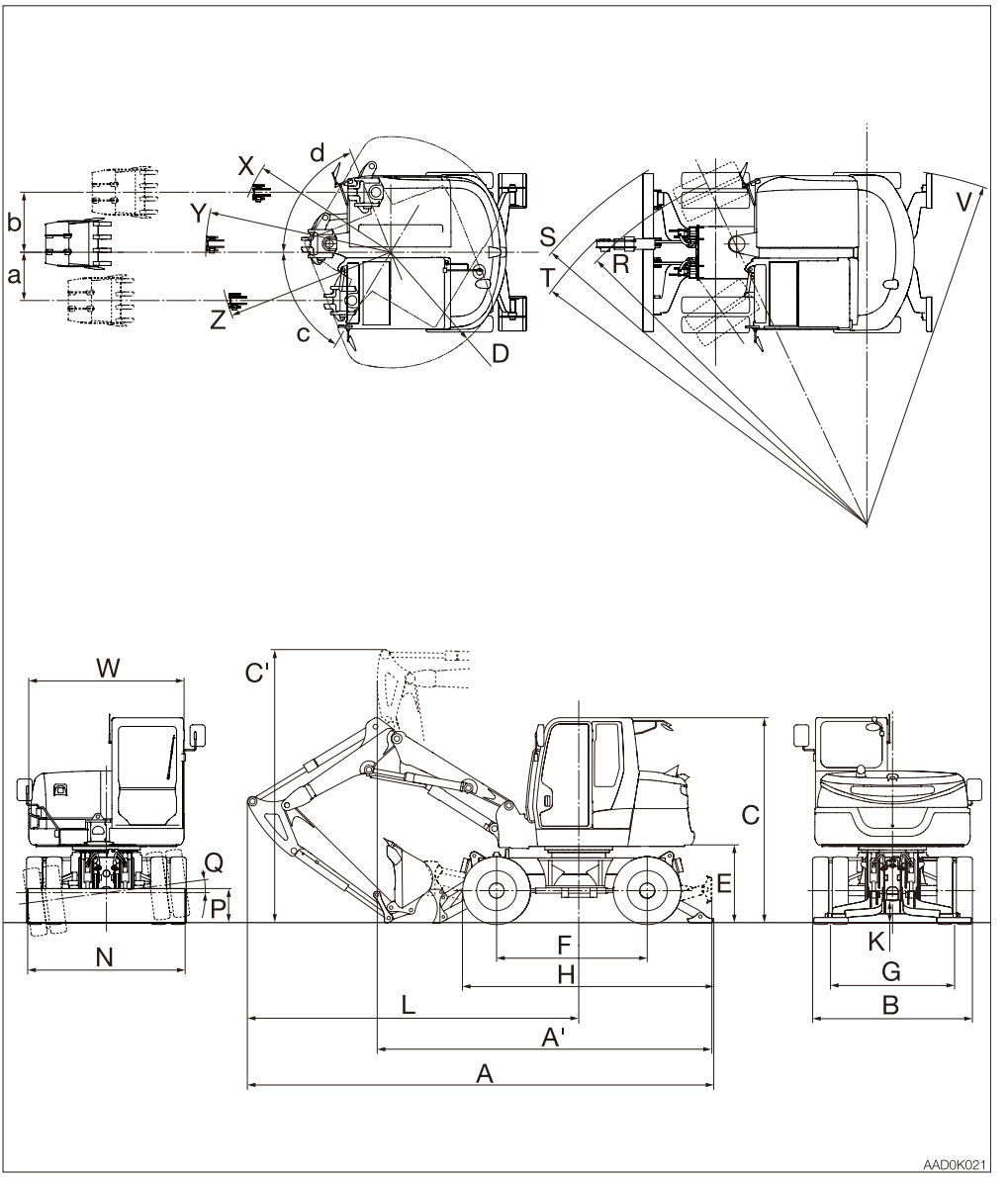

2-Piece boom (Two cylinders) (Machines with outriggers)

Unit: mm (inch)

	Item	2-Piece boom
A	Overall length	6790 (267.3)
A'	Overall length (Road travel posture)	5440 (214.2)
B	Overall width	2320 (91.3) 2380 (93.7)*
B'	Overall width (Equipped with mud guard)	2360 (92.9) 2410 (94.9)*
C	Overall height	3020 (118.9) 3055 (120.3)**
C'	Overall height (Road travel posture)	3975 (156.5)
D	Slew radius	1690 (66.5)
E	Clearance height under upperstructure	1115 (43.9)
F	Wheel base	2200 (86.6)
G	Tread	1810 (71.3)
H	Overall length of undercarriage	3675 (144.7)
K	Ground clearance of undercarriage	320 (12.6)
L	Front distance to axis of rotation	4815 (189.6)
N	Dozer blade width	2300 (90.6)
P	Dozer blade height	500 (19.7)
Q	Swing angle of axles	6.5°
Q'	Swing angle of axles (Equipped with mud guard)	3.5°
R	Minimum turning radius (Tire)	5725 (225.4) 3365 (132.5)***
S	Minimum turning radius (Dozer blade)	6280 (247.2) 3920 (154.3)***
T	Outside machine clearance radius	6290 (247.6) 4115 (162.0)***
V	Minimum turn radius (outrigger)	5450 (214.6) 3840 (151.2)***
W	Overall width of upperstructure	2270 (89.4)
X	Minimum radius of equipment at maximum front offset (Right)	2010 (79.1)
Y	Minimum radius of equipment and attachment	2445 (96.3)
Z	Minimum radius of equipment at maximum front offset (Left)	2255 (88.8)
a	Offset distance of bucket (right swing)	705 (27.8)
b	Offset distance of bucket (left swing)	875 (34.4)
c	Boom swing angle (Right)	59°
d	Boom swing angle (Left)	68°

*:Gapless tire specification **:With roof guard ***:4WS mode

2-Piece boom (One cylinder) (Equipped with a rear blade)

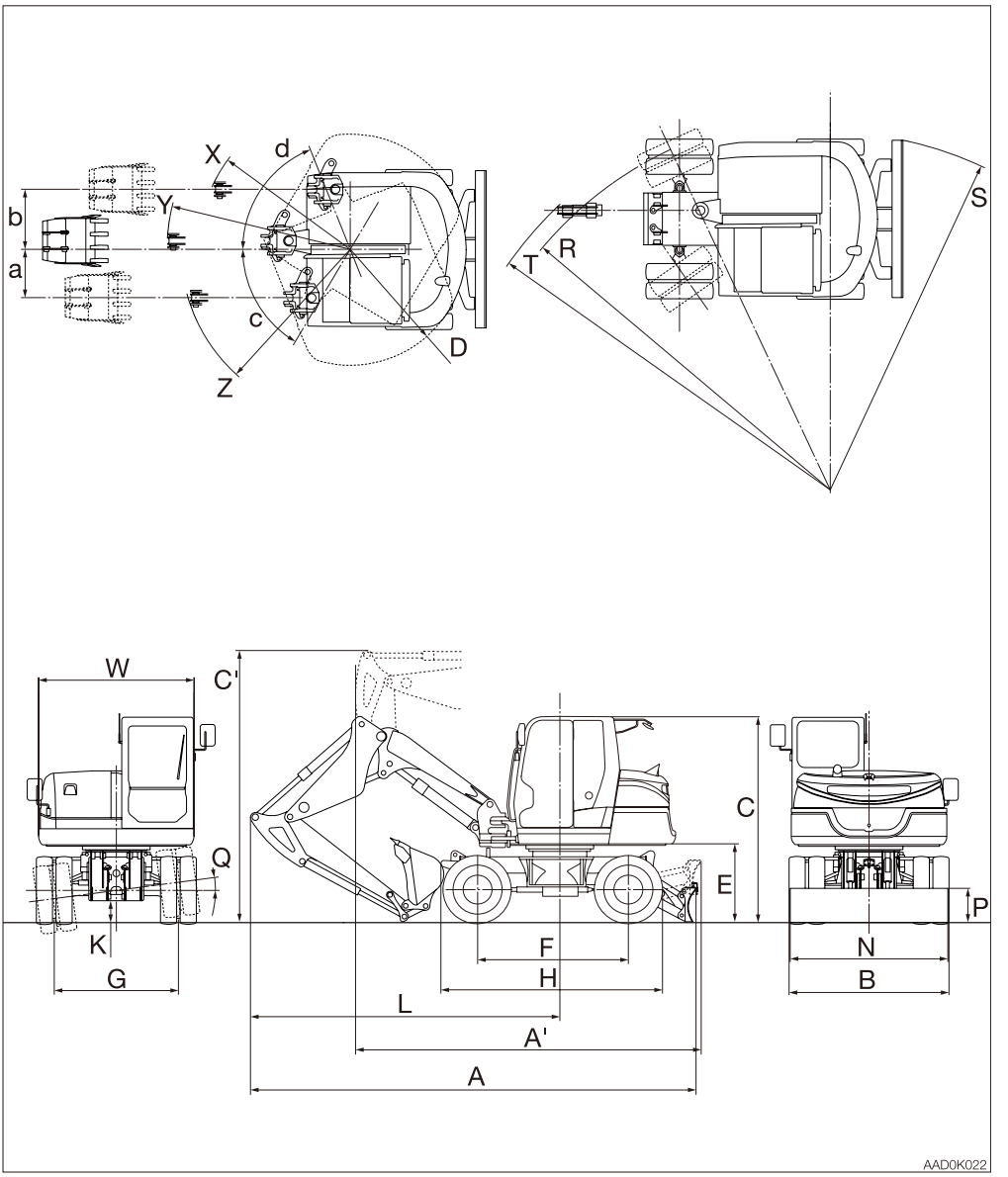

2-Piece boom (One cylinder) (Equipped with a rear blade)

Unit: mm (inch)

	Item	2-Piece boom
A	Overall length	6530 (257.1)
A'	Overall length (Road travel posture)	5065 (199.4)
B	Overall width	2320 (91.3) 2380 (93.7)*
B'	Overall width (Equipped with mud guard)	2360 (92.9) 2410 (94.9)*
C	Overall height	3020 (118.9) 3055 (120.3)**
C'	Overall height (Road travel posture)	4000 (157.5)
D	Slew radius	1690 (66.5)
E	Clearance height under upperstructure	1115 (43.9)
F	Wheel base	2200 (86.6)
G	Tread	1810 (71.3)
H	Overall length of undercarriage	3230 (127.2)
K	Ground clearance of undercarriage	320 (12.6)
L	Front distance to axis of rotation	4520 (178.0)
N	Dozer blade width	2300 (90.6)
P	Dozer blade height	500 (19.7)
Q	Swing angle of axles	6.5°
Q'	Swing angle of axles (Equipped with mud guard)	3.5°
R	Minimum turning radius (Tire)	5725 (225.4) 3365 (132.5)***
S	Minimum turning radius (Dozer blade)	5470 (215.4) 3905 (153.7)***
T	Outside machine clearance radius	5930 (233.5) 3695 (145.5)***
W	Overall width of upperstructure	2270 (89.4)
X	Minimum radius of equipment at maximum front offset (Right)	2215 (87.2)
Y	Minimum radius of equipment and attachment	2675 (105.3)
Z	Minimum radius of equipment at maximum front offset (Left)	2470 (97.2)
a	Offset distance of bucket (right swing)	705 (27.8)
b	Offset distance of bucket (left swing)	875 (34.4)
c	Boom swing angle (Right)	59°
d	Boom swing angle (Left)	68°

*:Gapless tire specification
**:With roof guard
***:4WS mode

2-Piece boom (One cylinder) (Machines with outriggers)

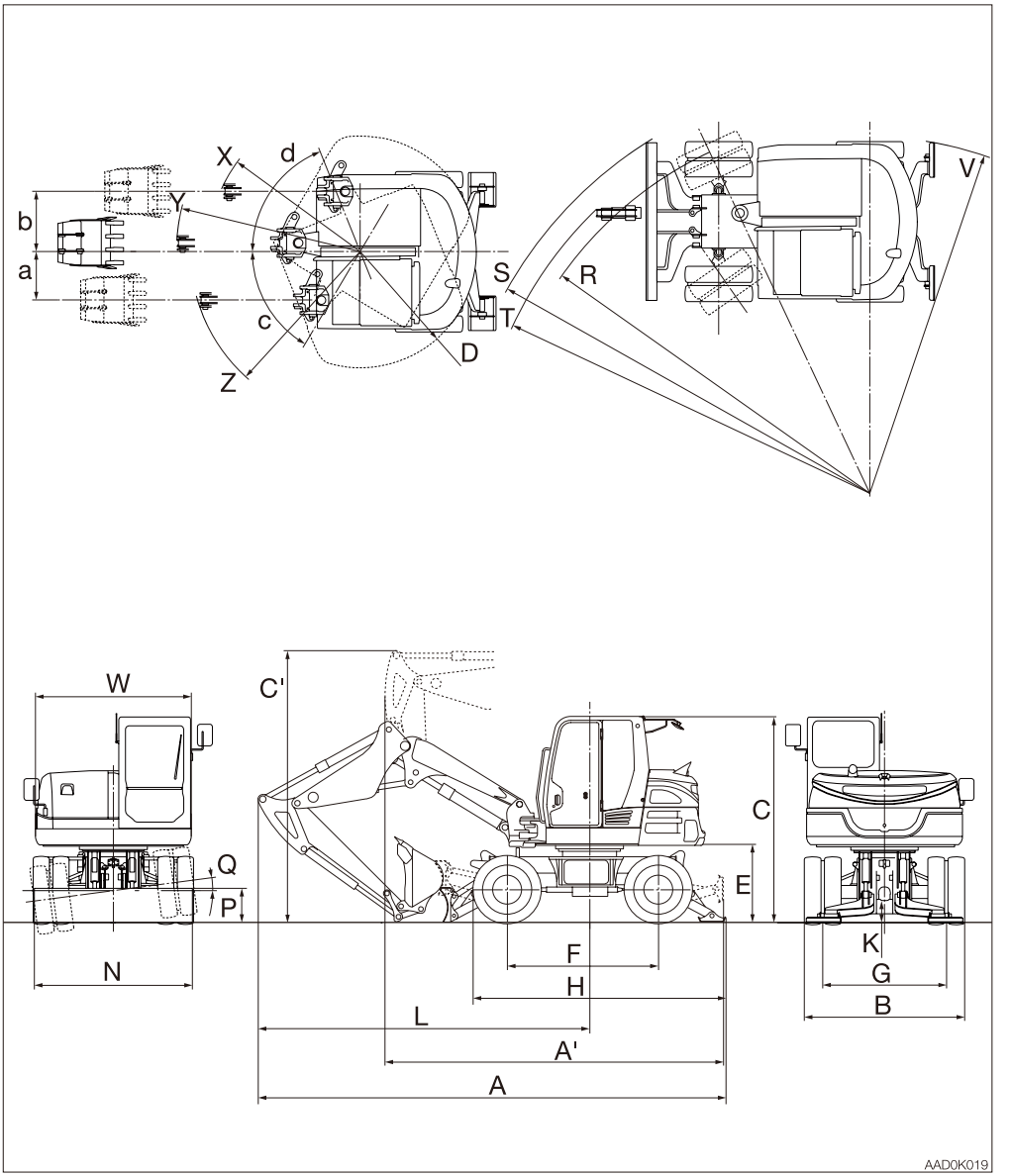

2-Piece boom (One cylinder) (Machines with outriggers)

Unit: mm (inch)

	Item	2-Piece boom
A	Overall length	6815 (268.3)
A'	Overall length (Road travel posture)	4925 (193.9)
B	Overall width	2320 (91.3) 2380 (93.7)*
B'	Overall width (Equipped with mud guard)	2360 (92.9) 2410 (94.9)*
C	Overall height	3020 (118.9) 3055 (120.3)**
C'	Overall height (Road travel posture)	4000 (157.5)
D	Slew radius	1690 (66.5)
E	Clearance height under upperstructure	1115 (43.9)
F	Wheel base	2200 (86.6)
G	Tread	1810 (71.3)
H	Overall length of undercarriage	3675 (144.7)
K	Ground clearance of undercarriage	320 (12.6)
L	Front distance to axis of rotation	4835 (190.4)
N	Dozer blade width	2300 (90.6)
P	Dozer blade height	500 (19.7)
Q	Swing angle of axles	6.5°
Q'	Swing angle of axles (Equipped with mud guard)	3.5°
R	Minimum turning radius (Tire)	5725 (225.4) 3365 (132.5)***
S	Minimum turning radius (Dozer blade)	6280 (247.2) 3920 (154.3)***
T	Outside machine clearance radius	5930 (233.5) 3695 (145.5)***
V	Minimum turn radius (outrigger)	5450 (214.6) 3840 (151.2)***
W	Overall width of upperstructure	2270 (89.4)
X	Minimum radius of equipment at maximum front offset (Right)	2215 (87.2)
Y	Minimum radius of equipment and attachment	2675 (105.3)
Z	Minimum radius of equipment at maximum front offset (Left)	2470 (97.2)
a	Offset distance of bucket (right swing)	705 (27.8)
b	Offset distance of bucket (left swing)	875 (34.4)
c	Boom swing angle (Right)	59°
d	Boom swing angle (Left)	68°

*:Gapless tire specification **:With roof guard ***:4WS mode

OPERATING RANGES

2-Piece boom (Two cylinders)

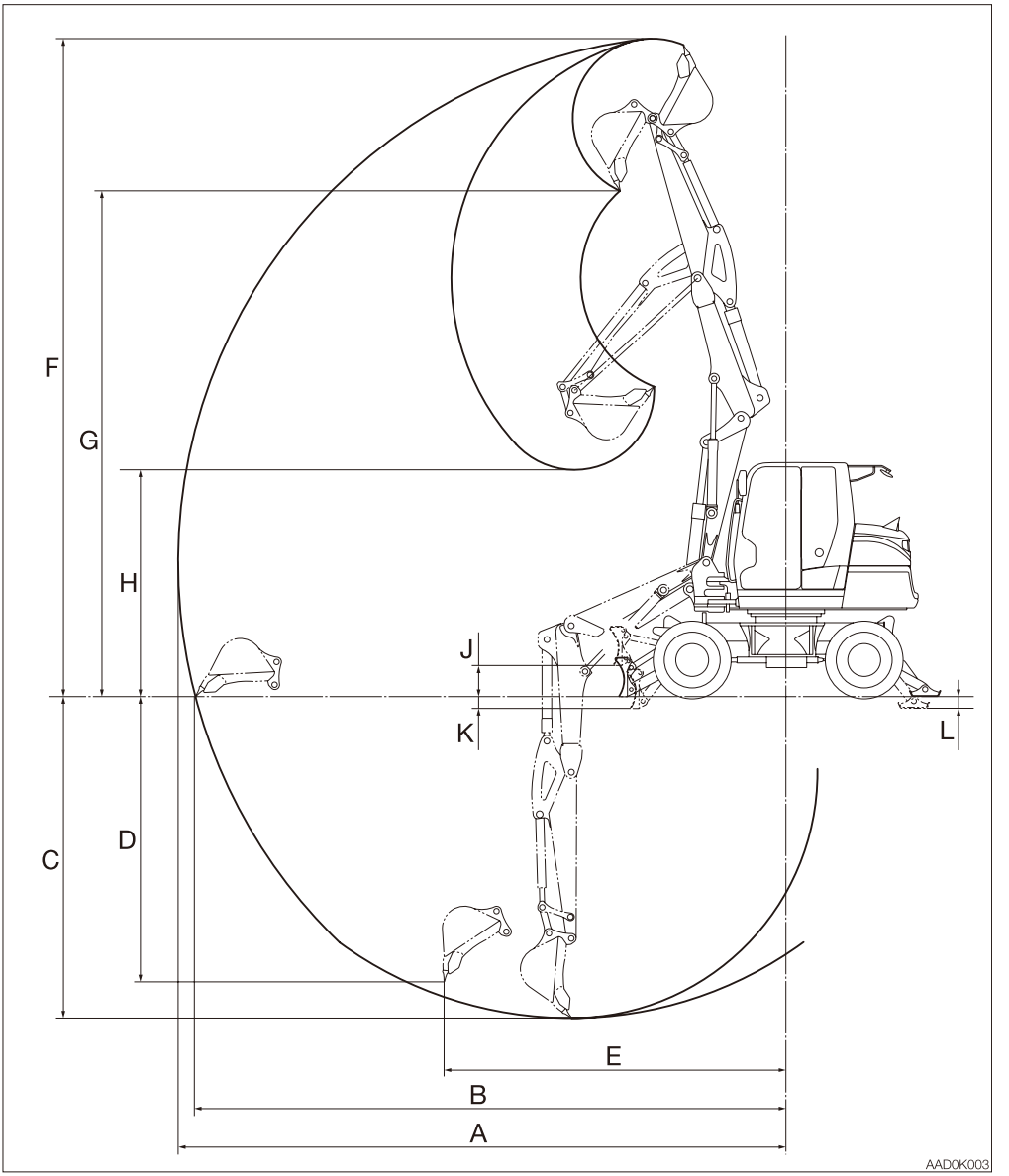

2-Piece boom (Two cylinders)

Unit: mm (inch)

	Item	2-Piece boom
A	Maximum reach	7675 (302.2)
B	Maximum reach at ground reference plane	7450 (293.3)
C	Maximum digging depth	4095 (161.2)
D	Maximum vertical digging depth	3525 (138.8)
E	Reach at maximum vertical digging depth	4775 (188.0)
F	Maximum height of cutting edge	8260 (325.2)
G	Maximum dumping height	6240 (245.7)
H	Minimum dumping height	2605 (102.6)
J	Dozer blade maximum lifting height	400 (15.7)
K	Dozer blade maximum lowering depth	150 (5.9)
L	Outrigger maximum lowering depth*	150 (5.9)

*: Machines with outriggers

2-Piece boom (One cylinder)

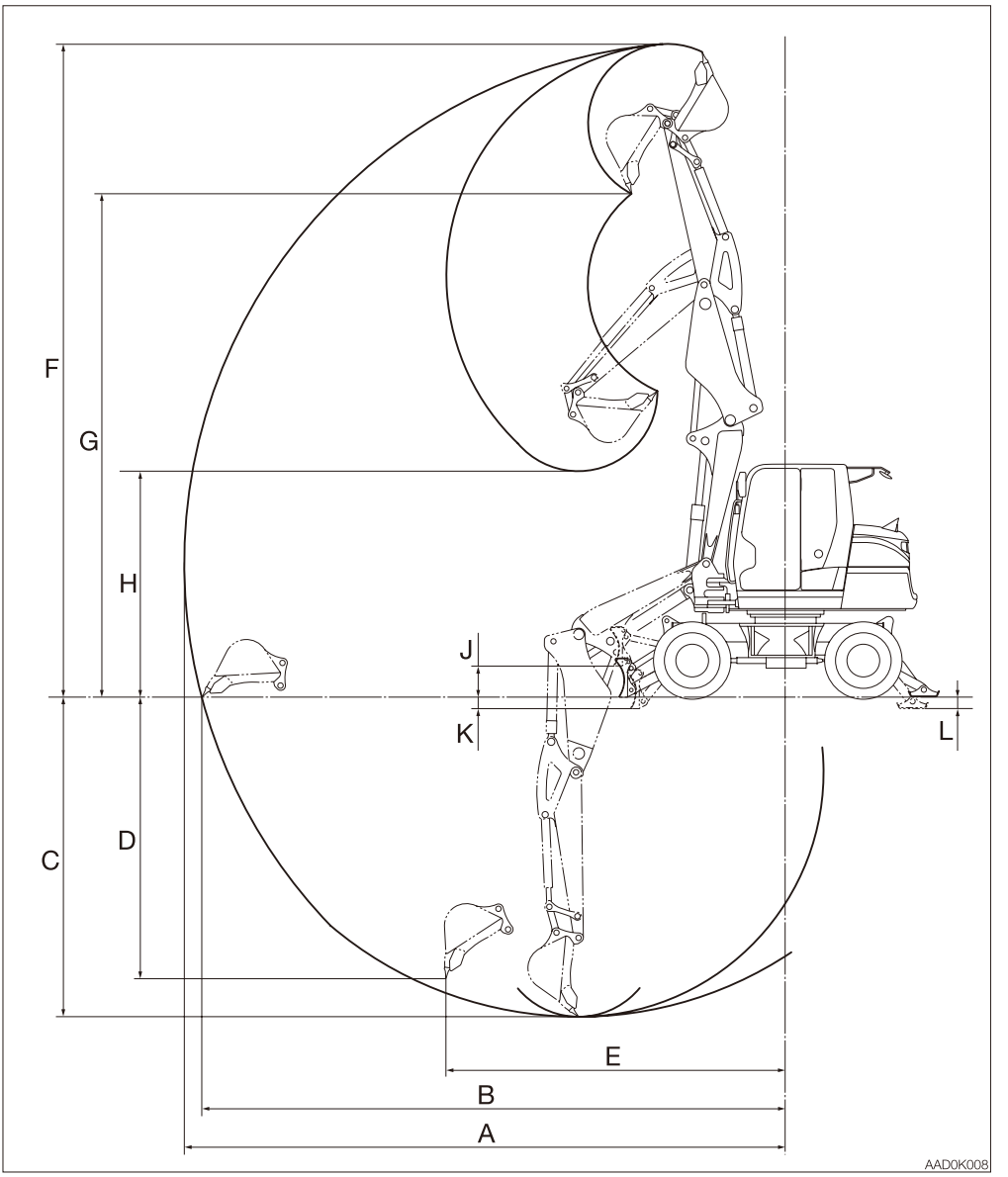

2-Piece boom (One cylinder)

Unit: mm (inch)

	Item	2-Piece boom
A	Maximum reach	7730 (304.3)
B	Maximum reach at ground reference plane	7510 (295.7)
C	Maximum digging depth	4115 (162.0)
D	Maximum vertical digging depth	3625 (142.7)
E	Reach at maximum vertical digging depth	4390 (172.8)
F	Maximum height of cutting edge	8400 (330.7)
G	Maximum dumping height	6475 (254.9)
H	Minimum dumping height	2905 (114.4)
J	Dozer blade maximum lifting height	400 (15.7)
K	Dozer blade maximum lowering depth	150 (5.9)
L	Outrigger maximum lowering depth*	150 (5.9)

*: Machines with outriggers

LIFTING CAPACITIES

When an excavator is used to lift loads in Europe, it must comply with EN 474-1: 2022.
Install the following devices, and then turn on the overload warning switch before starting the lifting operation:
- Lifting device
- Lifting safety device

The lifting safety device must include the emergency shut-off valves on the boom and on the arm.
For a 2-piece boom machine, an emergency shut-off valve must be installed on the first boom, the second boom and the arm, respectively.
If the blade is used as an outrigger when lifting loads, the blade cylinder must be equipped with an emergency shut-off valve. Refer to “Lifting safety device (If equipped)” on page 2-123.

Rated lift capacity chart

- The loads in the charts do not exceed 87% of hydraulic lift capacity or 75% of tipping load.
- Figures marked with an asterisk (*, ※) are hydraulically-limited capacities.
- The bucket mass is excluded.
- The mass of slings and any other lifting devices shall be deducted from the rated load to determine the net load that may be lifted.
- The load point is the bucket hinge pin.
- The bucket cylinder is fully extended.
- Unit: kg (lbs)

Lifting device (If equipped)

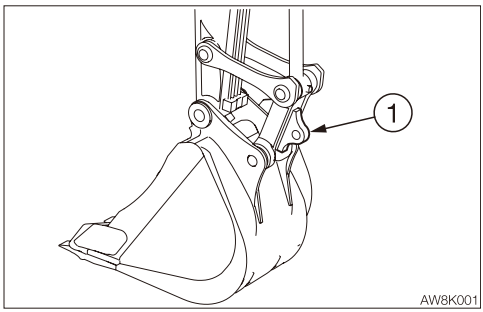

IMPORTANT: When a lifting operation is performed using a machine in Europe, you must use a machine equipped with a lifting device that complies with EN 474-1: 2022. Use a Takeuchi genuine lifting device (1).
If your machine is not equipped with our genuine lifting device (1), you must install an attachment that has a lifting device complying with EN 474-1: 2022.
When such an attachment is required, contact a Takeuchi sales or service dealer for advice.

When lifting loads, install the sling on the lifting device (1).

Load hooking system

A load hooking system must be provided with the following capabilities.
1. A system which can withstand two-and-a-half times the rated lift capacity no matter at what position the load is applied.
2. A system that poses no risk of the lifted load falling from the hooking device. For example, equipped with a hook slippage prevention device.
3. A system that poses no risk of the hooking system slipping from the hoe attachment.

Inspection before lifting loads

Before lifting loads, inspect the following items to ensure there is no abnormality:

- Inspect for any damage to the attachment, hose or lifting device.
- Confirm that the overload warning device operates.
  Turn on the overload warning switch, and then fully raise the boom. If the horn is sounded, the overload warning device is normal.

⚠ WARNING

- **Do not attempt to lift or hold any load that is greater than these rated values at their specified load radii and height.**
- **The rated lift capacities are based on the machine being level and situated on a firm supporting surface. For safe lifting, the operator is expected to make due allowance for the particular job conditions such as soft or uneven ground, non-level condition, load to the machine sides, hazardous conditions, experience of personnel, etc. The operator and other personnel should fully acquaint themselves with the operator's manual furnished by the manufacturer before operating this machine. When operating the machine, the safety rules of the equipment must also be followed.**
- **Do not travel while lifting a load; It is very dangerous.**
- **Do not lift loads when the boom is being swung to the right or left. Doing so could cause the machine to tip over.**

2-Piece boom (Two cylinders) (Equipped with a rear blade)

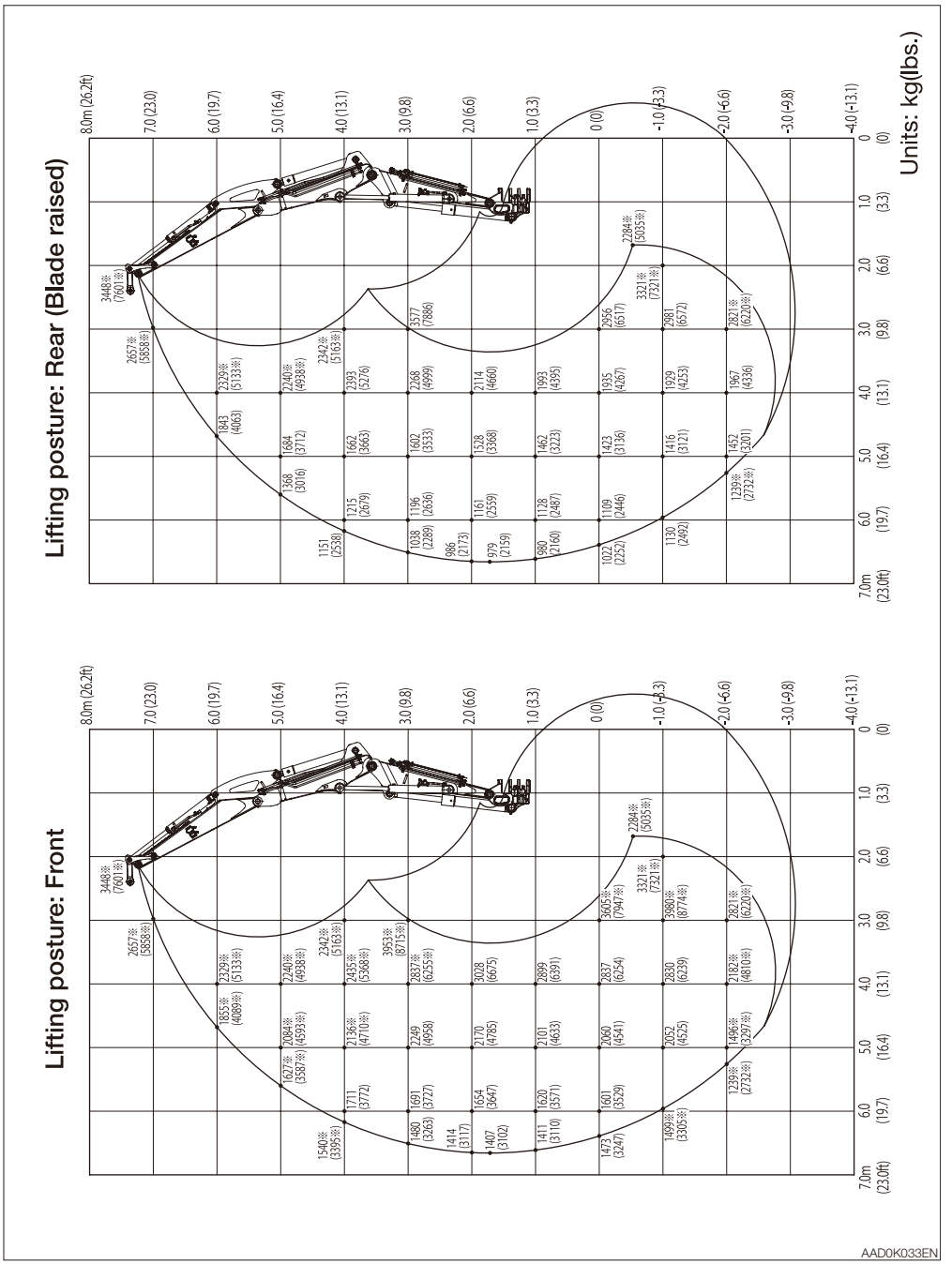

2-Piece boom (Two cylinders) (Equipped with a rear blade)

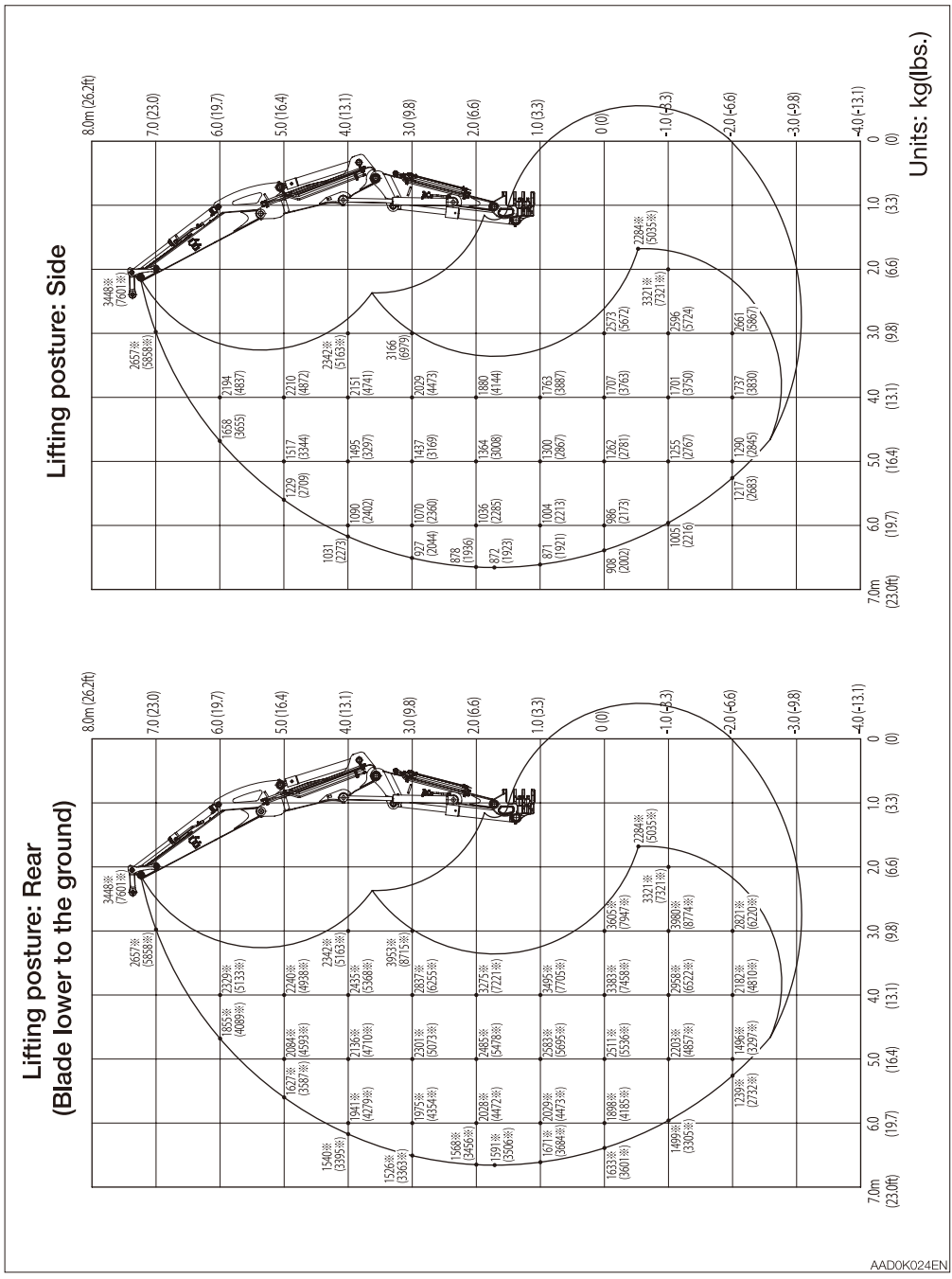

2-Piece boom (Two cylinders) (Machines with outriggers)

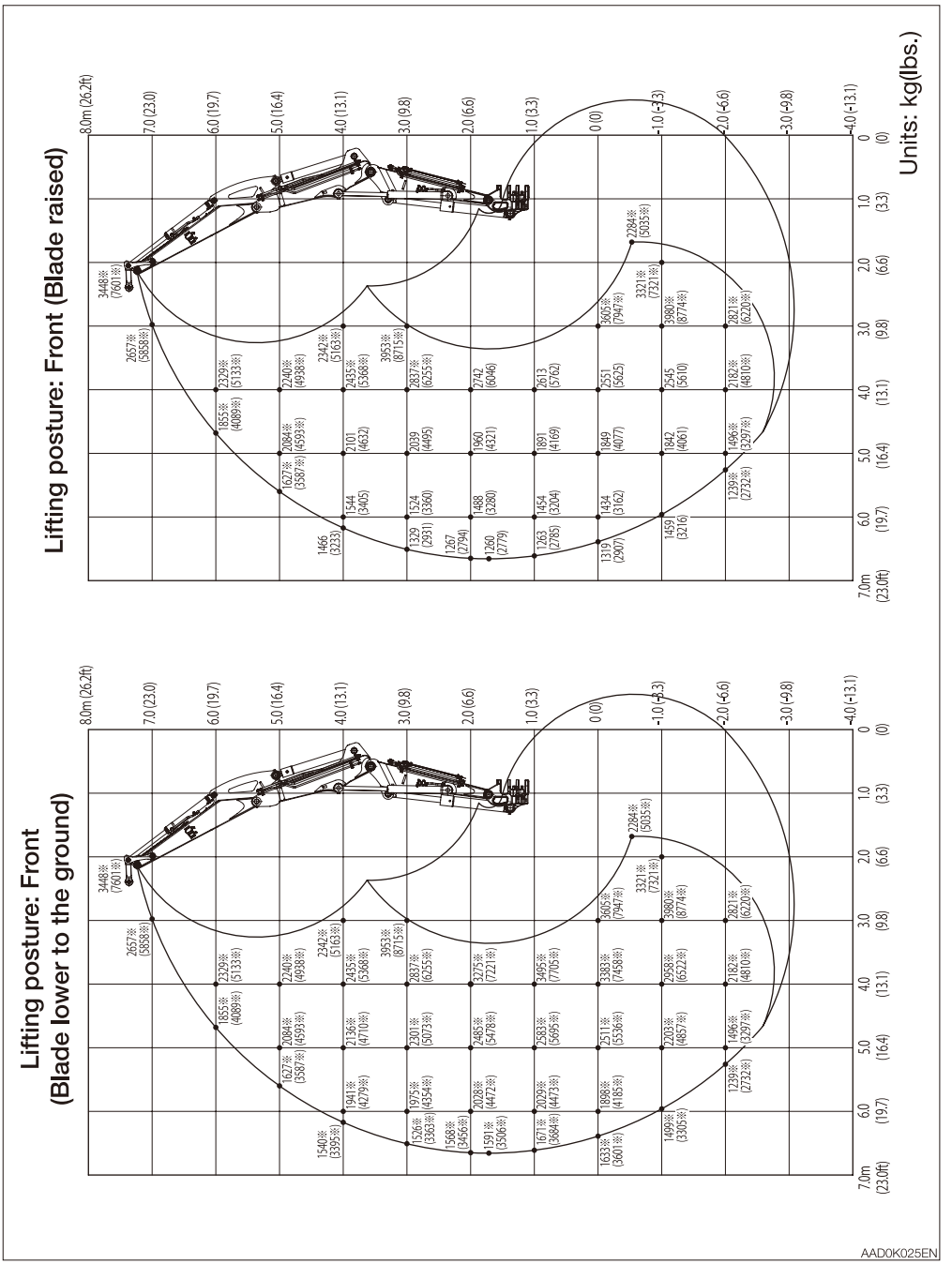

2-Piece boom (Two cylinders) (Machines with outriggers)

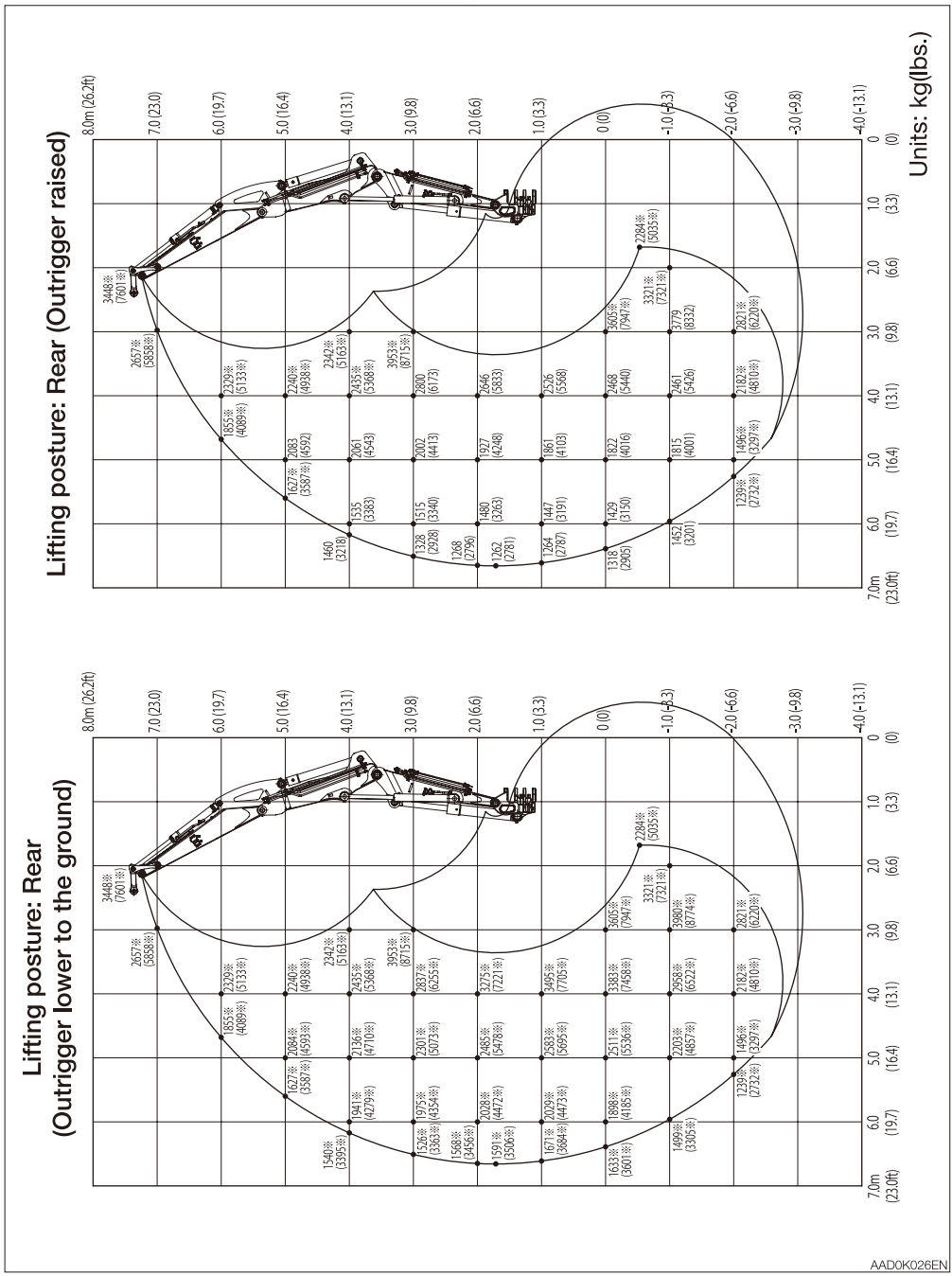

2-Piece boom (Two cylinders) (Machines with outriggers)

Units: kg(lbs.)

Lifting posture: Side

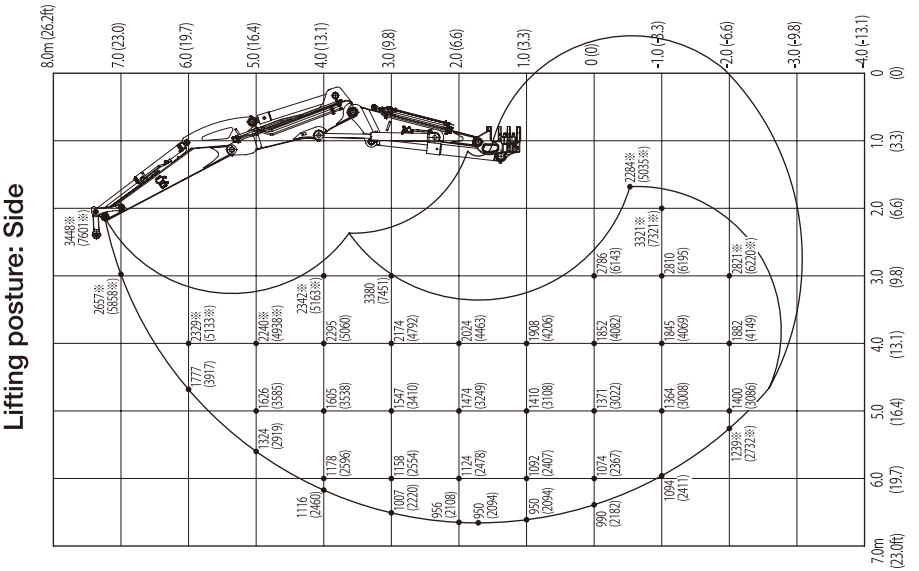

AAD0K027EN

2-Piece boom (One cylinder) (Equipped with a rear blade)

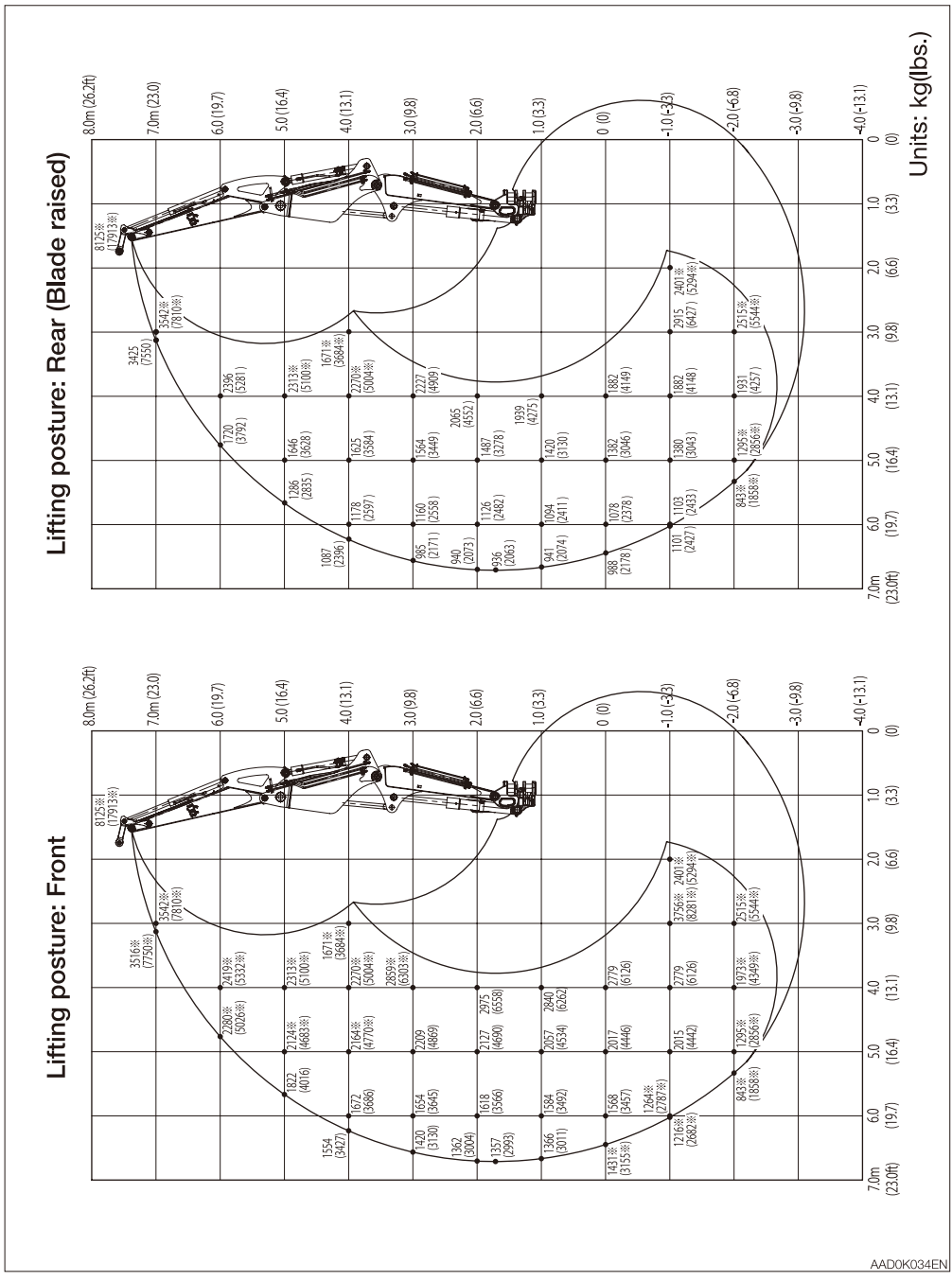

2-Piece boom (One cylinder) (Equipped with a rear blade)

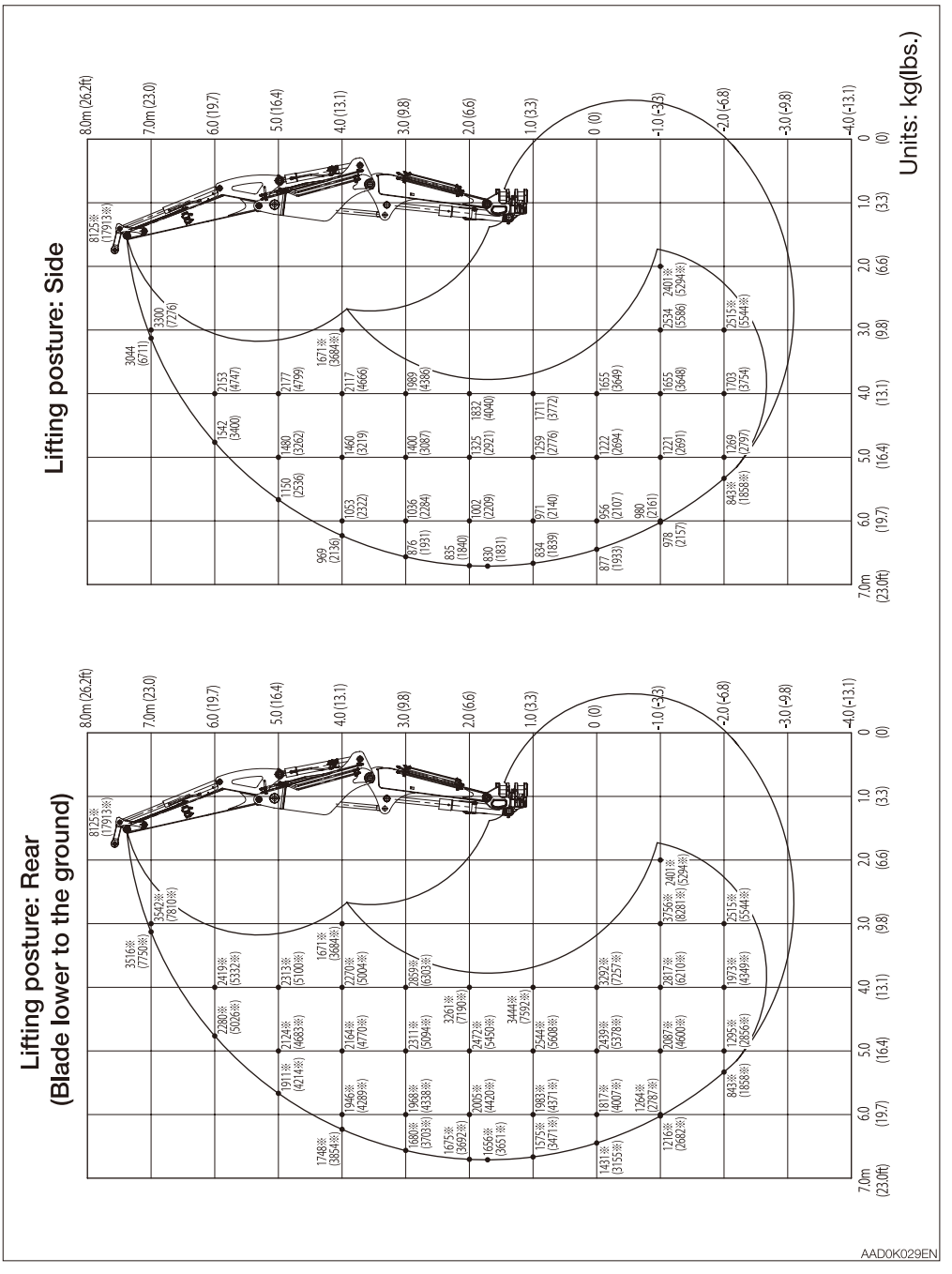

2-Piece boom (One cylinder) (Machines with outriggers)

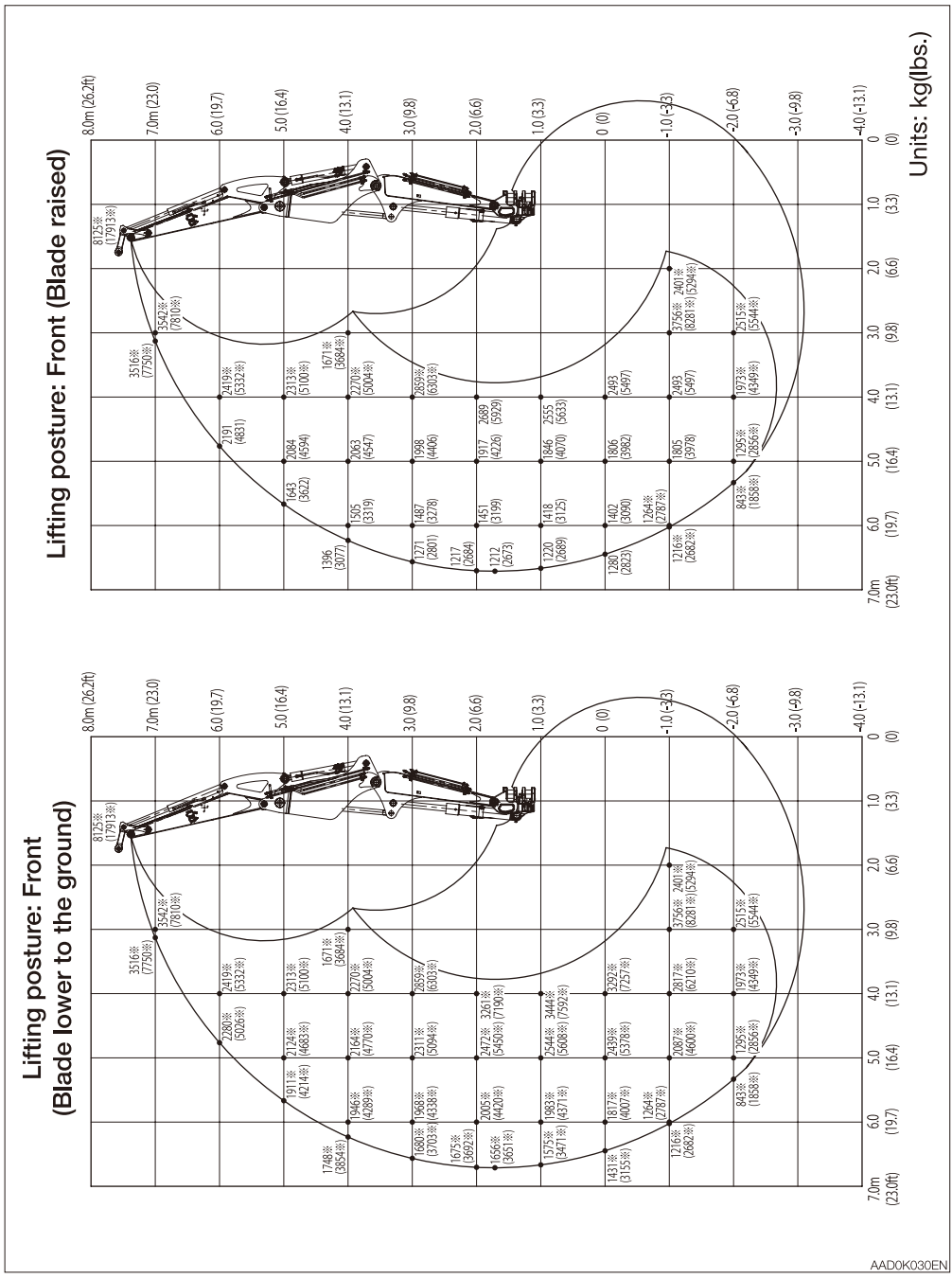

2-Piece boom (One cylinder) (Machines with outriggers)

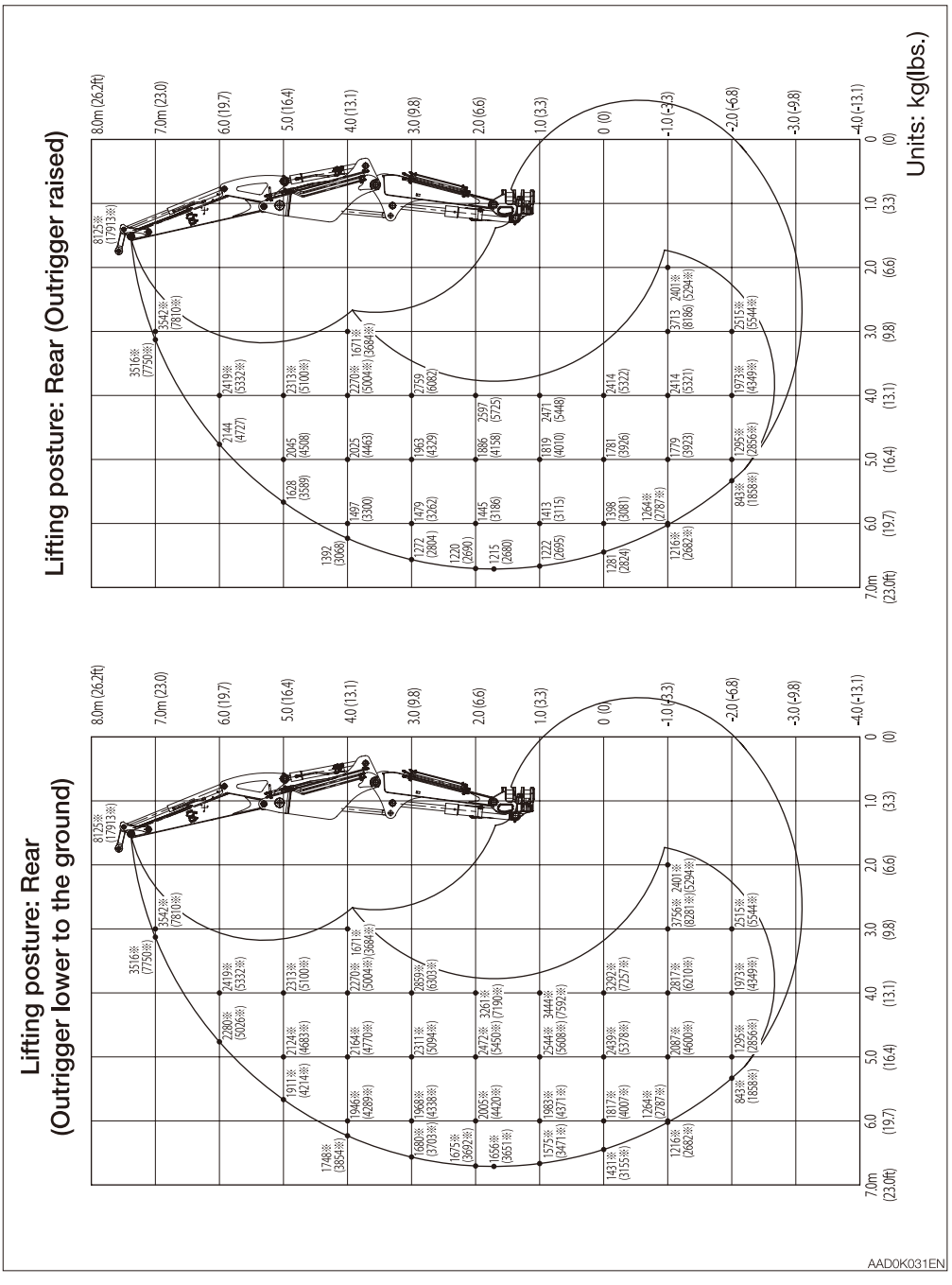

2-Piece boom (One cylinder) (Machines with outriggers)

Units: kg(lbs.)

Lifting posture: Side

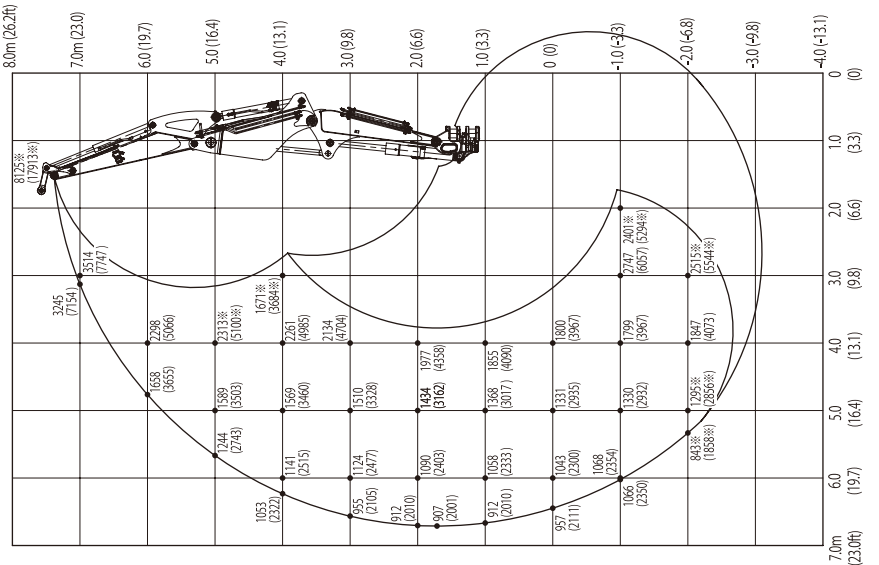

AAD0K035EN

OPTIONS

GENERAL PRECAUTIONS

SAFETY PRECAUTIONS

⚠ WARNING

When removing or installing an attachment or optional part, take the following precautions.

- Consult with Takeuchi before installing an optional attachment.
- Do not use any attachments not approved by Takeuchi. Doing so may cause safety problems. Or, it may adversely affect the machine's operation or service life.
- We will not be held responsible for any injuries, accidents or damage to its products caused by the use by a non-approved attachment.
- Select a firm, level work area. Also, be sure to park in a well ventilated place.
- Clear obstacles and dangerous objects, and clean up spilled fuel immediately.
- When hoisting, be sure to designate a person to act as a signalman. Follow the instructions of the signalman regarding the procedure and measures.
- When it is necessary to temporally place a heavy object or an attachment on the ground during removal or installation, be sure to place it in a stable position.
- Keep everyone out of the area when hoisting. There is a hazard of objects falling or contacting with people in the area.
- Use a crane to move heavy objects (25 kg (55 lb.) or greater).
- Before removing a heavy object, be sure to put a support to it. When lifting with a crane, pay attention to the center of gravity of the load to keep the machine in balance.
- Do not operate the machine while the load is lifted by a crane stand.
- Use the proper procedure when mounting a boom or arm; otherwise serious damage could result. Consult your sales or service dealer for help.

CAUTIONS WHEN INSTALLING ATTACHMENTS

Be sure to perform a test operation after an optional or other special attachment has been replaced. Inspect the hydraulic oil level and recharge it as necessary. Consult your sales or service dealer for detailed procedures on installing/removing attachments.

CAUTIONS WHEN OPERATING ATTACHMENTS

⚠ WARNING

Long attachments reduce stability of the machine. The machine may tip over if it loses the balance when traveling or slewing on slopes.
Never perform the operations listed below as they are extremely dangerous.

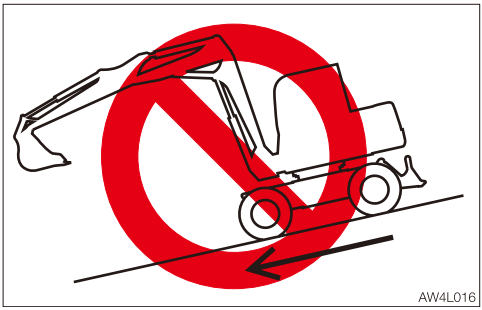

- Traveling down the slopes with the attachment raised



- Traveling across slopes

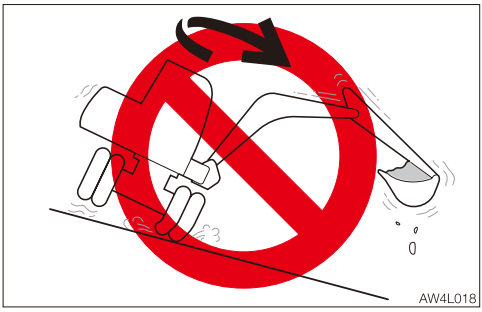

- Slewing on slopes
- If there is a heavy attachment is installed, the machine takes longer distance than usual to come to a complete stop when the stopping operation is performed. Carefully judge the distance so as not to bump into an object around the machine. Keep a safe distance from surrounding obstacles. When a heavy attachment is installed, natural drop (the gradual dropping of the attachment under its own weight when it is stopped in midair) increases.
- The machine can tip over more easily in the lateral direction than in the longitudinal direction.
  - Do not slew sideways with a heavy load at the how attachment. In particular, do not slew sideways on slopes.
  - The attachment is heavier for machines equipped with breakers or crushers than for machines equipped with the standard bucket. Do not operate such machines sideways, especially digging downhill.
- When a long arm is installed, the operating range increases. Carefully judge the distance so as not to bump into an object around the machine. Keep a safe distance from surrounding obstacles.

ATTACHMENT COMBINATION TABLE

The table below shows which bucket should be installed when the machine is using a standard arm (long arm). Select a proper bucket by following the table.

⚠ WARNING

- **Consult with Takeuchi before installing an optional attachment.**
- **Do not use any attachments not approved by Takeuchi. Doing so may cause safety problems. Or, it may adversely affect the machine's operation or service life.**
- **We will not be held responsible for any injuries, accidents or damage to its products caused by the use by a non-approved attachment.**
- **The swing stopper must be installed when a bucket wider than a 750W (standard) bucket is installed. Failure to do so may result in the bucket hitting the machine body.**

√ :Can be used.
Δ :Can be used only for light operations (digging and loading of dry and loose soil or mud)
— :Cannot be used.
Total bucket mass = Bucket mass + Heaped bucket load (specific gravity: 1.8)

Bucket	Rated capacity m^3 (cu.yd.)	Bucket cutting width mm (inch)	2-Piece boom
430W (no side cutter)	0.14 (0.18)	430 (16.9)	√
500 W	0.14 (0.18)	500 (19.7)	√
650 W	0.20 (0.26)	650 (25.6)	√
750 W (S.T.D.)	0.25 (0.33)	750 (29.5)	√
Total bucket mass= Within 657 kg (1448 lb.)		Within 750 (29.5)	√
Hydraulic Breaker (TKB-401)			—

SELECTING A LEVER PATTERN

The operating pattern of the left and right operating levers can be changed.

⚠ WARNING

Before starting the engine, check the selector to see which operating pattern the left and right operating levers are set.

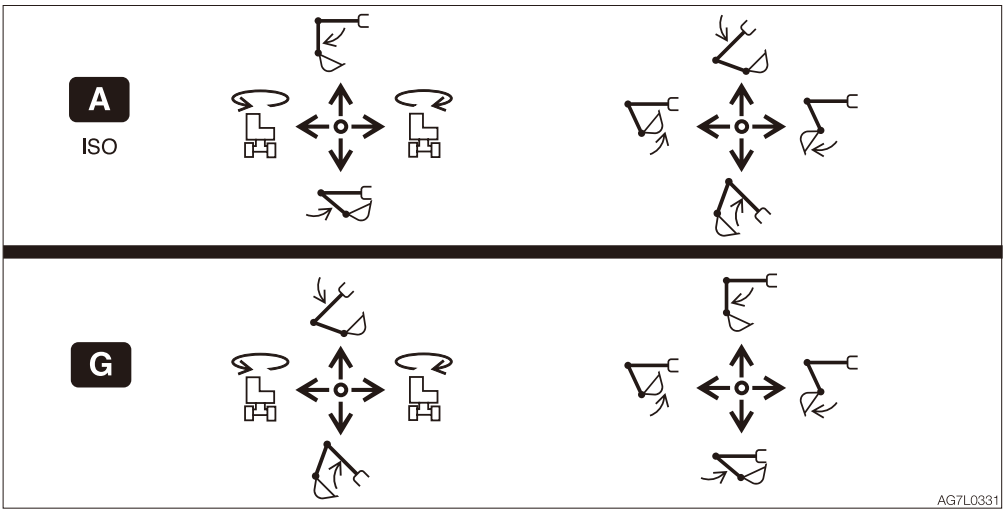

SWITCHING THE LEVER PATTERN

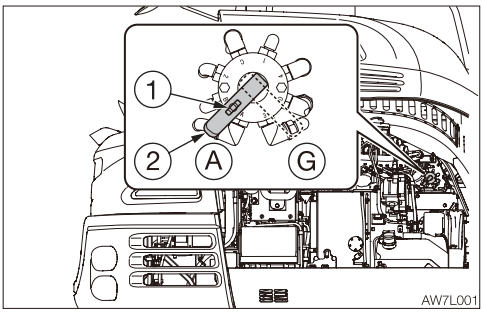

(A) : ISO pattern
(G) : G pattern

1. Park the machine on a flat and rigid ground, and stop the engine.
2. Open the right side cover.
3. Loosen the wing bolt (1).
4. Turn the selector valve lever (2) to change the pattern.
5. Tighten the wing bolt (1) and fasten the lever (2) in place.
6. Close the cover.
7. Confirm the lever pattern.

HYDRAULIC BREAKER

For handling of the breaker, read the hydraulic breaker's manual, provided separately.

IMPORTANT: When installing an attachment, make sure that it is appropriate for the machine being used. Contact your sales or service dealer for advice on selecting attachments.

CAUTIONS ON OPERATING

- Run the machine with 75% of the flow rate. Refer to "1. Auxiliary 1st flow rate setting" on page 2-49.

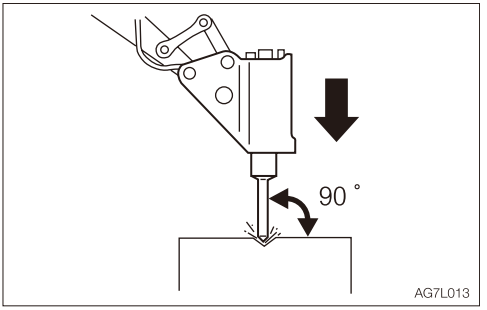

- Pound with the chisel pressed perpendicular to the surface to be pounded.
- When pounding, press the chisel properly against the object to be broken so as to avoid pounding the air.

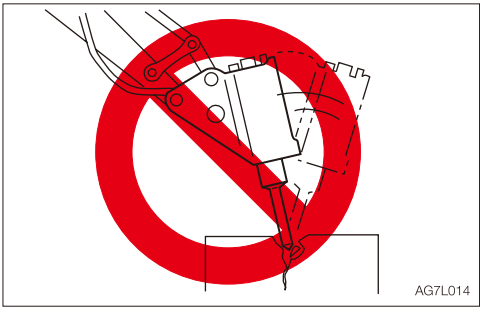

- Do not pry with the chisel or do not pry while pounding.
- Do not move the chisel while pounding.
- Do not pound continuously for over 30 seconds on the same surface.

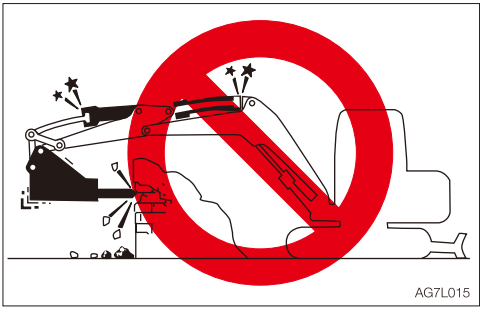

- Do not pound with the cylinder fully extended or retracted (at the stroke end). Leave a margin of at least 50mm(2 in).

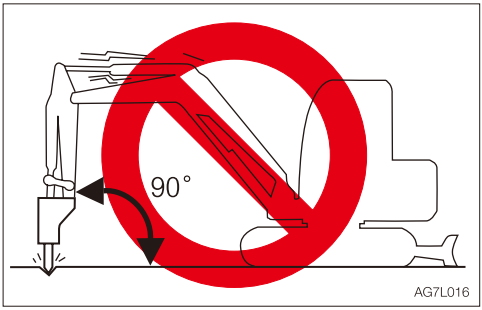

- Do not pound with the arm placed perpendicular to the ground surface.

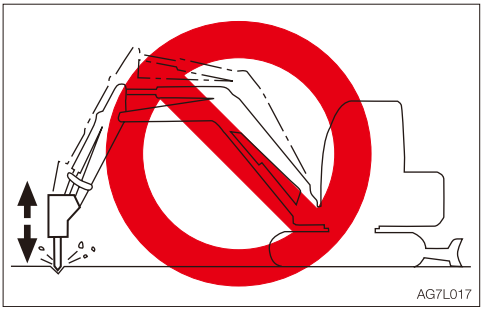

- Do not drop the breaker itself on the object to be broken in order to break it.
- Do not move objects to be broken or rocks with the breaker itself.
- Slew the machine occasionally to cool the engine.
- If a hydraulic hose is vibrating abnormally, nitrogen gas may be leaking from the accumulator. Ask for an inspection early.

REPLACING THE HYDRAULIC OIL REGULARLY

When a hydraulic breaker is used, the oil deteriorates more quickly than that used for a usual operation. Be sure to replace the hydraulic oil and the return filter elements.

- Failure to replace these in time can lead to damage to the machine and the breaker hydraulic system. To improve the service life of the hydraulic systems, be sure to replace the hydraulic oil and return filter element after the number of hours shown on the diagram below.
- When replacing the hydraulic oil, clean the suction strainer.

Replacement interval (hours)

Item	Hydraulic oil	Filter element
1st time	—	25
2nd time	—	100
Periodically	1200 (600)	200

When the breaker operating ratio is 100%.

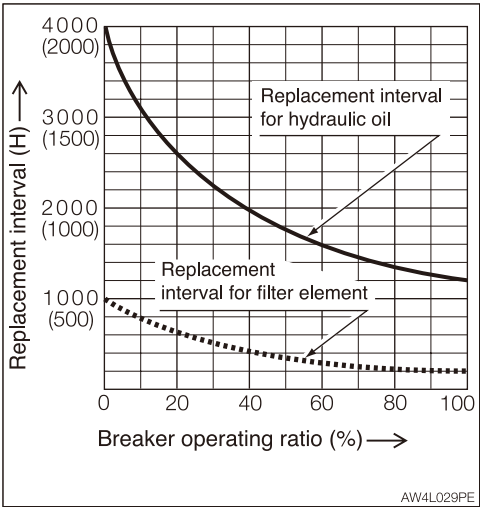

( ): When using conventional antiwear hydraulic oil.

OPTIONAL EQUIPMENT MASS

OPTION	
2 piece boom of 1adjust cylinder	-10 (-22)
With out Bucket	-180 (-397)
Emergency shutt-off valve (Arm, adjust)	15 (33)
3rd auxiliary hydraulic line	10 (22)
3rd auxiliary hydraulic line (Hard lock type)	15 (33)
3rd+4th auxilairy hydraulic	30 (66)
Outrigger	350 (772)
Guard, front	35 (77)
Guard, roof	45 (99)
4WS	120 (265)
Gapless tire	205 (452)
Mud guard (2WS, standard tire)	55 (121)
Mud guard (4WS, standard tire)	50 (110)
Mud guard (2WS, gapless tire)	75 (165)
Mud guard (4WS, gapless tire)	75 (165)

Units: kg (lb)

*: Mass of optional equipment is added to the standard machine mass.
*: This table only contains the optional equipment of ±10kg (±20lb).

BIODEGRADABLE OIL

Biodegradable oil is a new type of hydraulic oil that is decomposed into carbon dioxide and water by microorganisms in the soil and water. It is highly safe for living organisms and offers advantages in term of environmental protection.

- Recommended biodegradable oil: Mobile EAL Envirosyn 46H (an ester synthetic oil) and Panolin HLP Synth 46 (an ester synthetic oil).
  When replacing the mineral oil with biodegradable oil, use either of the above brand oil.
  Note that there are oils of other brands, even among ester synthetic oils, which may damage O-rings, packings and seals.
- When switching from a mineral oil to a biodegradable oil, the parking brake torque decreases by about 30%.

REPLACING THE HYDRAULIC OIL WITH BIODEGRADABLE OIL

- A mixture of mineral oil and biodegradable oil or a mixture of different brands of biodegradable oils will result in a decrease in performance of the hydraulic oil, biodegradability and safety. The inside of the hydraulic oil system must be flushed (cleaned) before replacing. The residual mineral oil in the machine should be about 2% or less, as complying with the ISO 15380.
- This operation is dangerous and requires experience. Ask a Takeuchi sales or service dealer for help.

Flushing

To be performed by a Takeuchi sales or service outlet

1. Drain the hydraulic oil (mineral oil) from the hydraulic oil tank and clean the inside of the tank and suction strainer.
   Refer to “Replacing the hydraulic oil and cleaning the suction strainer” on page 5-75.
2. Remove the cylinder hoses and drain the hydraulic oil (mineral oil) from inside the cylinders.
3. Supply new biodegradable oil to the hydraulic oil tank.
4. Bleed the air from the pump and cylinders and pressurize the hydraulic oil tank.
5. Operate the hydraulic devices for 30 minutes.
6. Drain the biodegradable oil from the tank and cylinders.
7. Replace the hydraulic oil return filter with a new filter.
8. Repeat steps 3 and 4.
9. Operate the hydraulic devices for 30 minutes.
10. Drain the biodegradable oil from the tank and cylinders.
11. Repeat steps 3 and 4.
12. Operate the hydraulic devices for 1 hour.
13. Drain the biodegradable oil from the tank and cylinders.
14. Replace the return filter with a new filter.
15. Repeat steps 3 and 4.
16. Operate the hydraulic devices, then check for oil leakage.

There is no need to flush the hydraulic oil system when switching from biodegradable to mineral hydraulic oil.

CAB OPTIONS

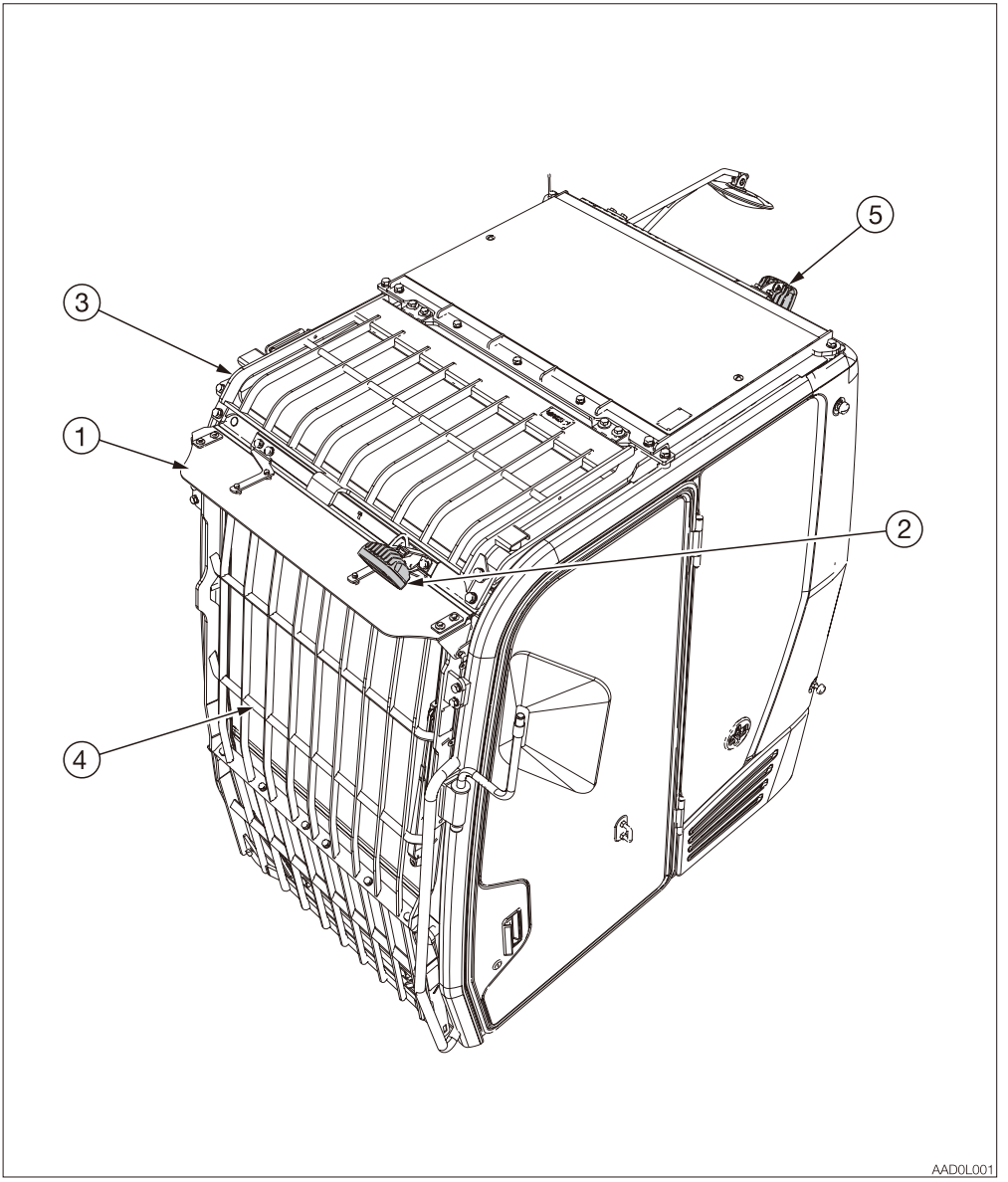

1. Rain guard
2. Front light
3. Roof guard (Level II: ISO 10262)
4. Front guard (Level II: ISO 10262)
5. Rear light

ROOF GUARD

⚠ WARNING

- **When opening the roof guard, be sure to work on the footing. You may get caught by the roof guard or fall off.**
- **After opening the roof guard, make sure the roof guard is securely locked with the stopper.**
- **After closing the roof guard, make sure it is securely fixed with the bolt.**

Open the roof guard to clean the ceiling window.

Opening

1. Park the machine on a firm, level work area.

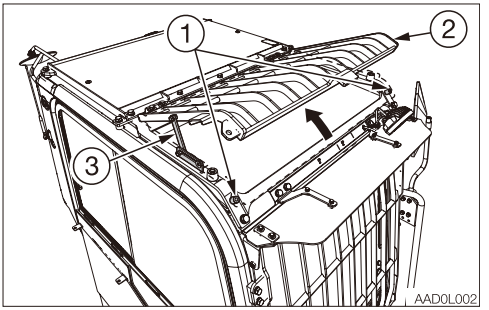

2. Remove the bolt (1) and lift the roof guard (2) until it stops.
3. Lower the roof guard (2) slowly and lock it with the stopper (3).

Closing

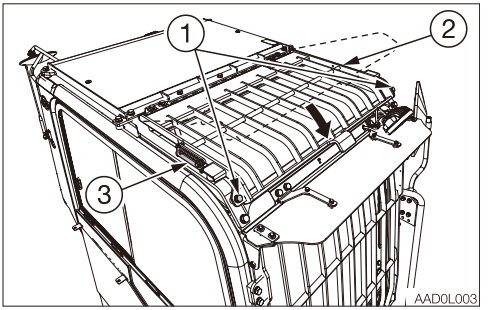

1. While lifting the roof guard (2), pull the stopper (3) forward and lower the roof guard (2).
2. Tighten the bolt (1) to fix the roof guard (2).

OPERATING LEVER SWITCH KIT 1

HORN BUTTON

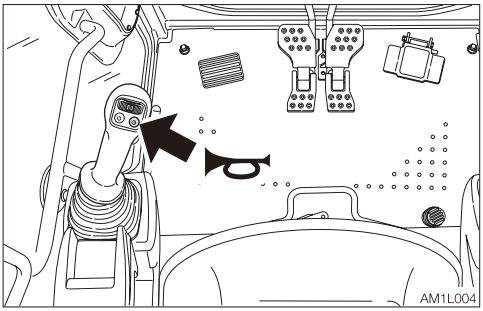

Press the button situated on the left operating lever to blow the horn.

DECELERATION BUTTON

⚠ WARNING

Before operating the deceleration button, set the operating lever to the neutral position and take your foot off the pedals. If the deceleration button is pressed while driving, the machine's operating speed will abruptly change to result in a dangerous situation.

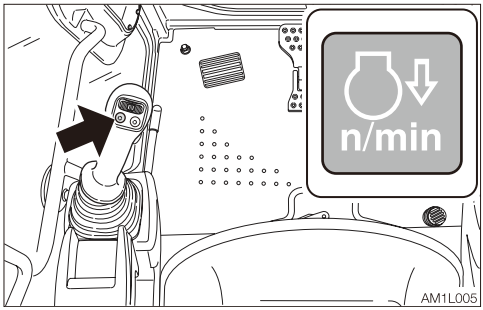

Press this button on the left operating lever to lower the engine speed to low idling. Press the button again to return to the engine speed set with the throttle controller. For safety reasons, it is designed that the deceleration function is activated to set the engine revolutions to low idling whenever the engine is started.
Cancel the deceleration mode by pressing the deceleration button as necessary.

Note: This deceleration button is capable of decreasing the engine speed and reducing the fuel consumption, with a simple operation, in a situation such as when little engine output is required and thus the operating or the travel levers are in neutral.

AUXILIARY 1ST SWITCHES

Auxiliary hydraulic buttons

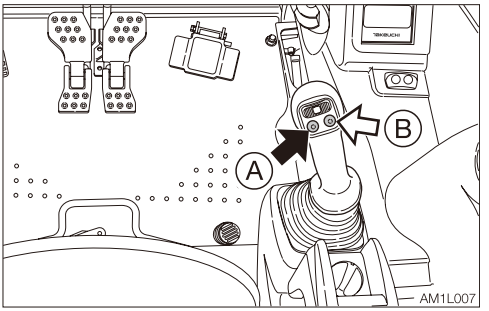

Press those buttons to control the flow of the oil in the first auxiliary hydraulic lines.

- Proportional control of the auxiliary hydraulic circuit is not possible.

(A).....Hydraulic oil flows to the left auxiliary line (a).

(B) .....Hydraulic oil flows to the right auxiliary line (b).

Slider switch (Proportional control)

Proportional control allows for slow-to-fast/ fast-to-slow movement of attachment. Example: If you move the slider switch half way, the attachment will move at approximately one-half the speed.

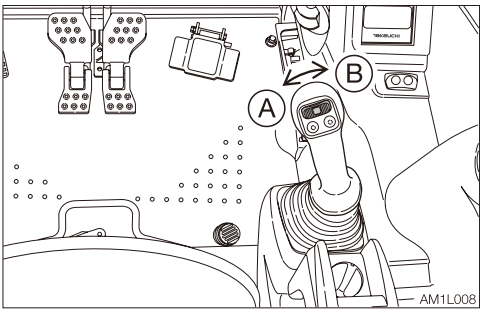

Move this switch to control the flow of the oil in the first auxiliary hydraulic lines.

(A).....Hydraulic oil flows to the left auxiliary line (a).

(B) .....Hydraulic oil flows to the right auxiliary line (b).

Refer to “Auxiliary hydraulic lines (If equipped)” on pages 2-114 to 2-119.

AUXILIARY 2ND/4TH SWITCH

Slider switch
(Proportional control)
Proportional control allows for slow-to-fast/ fast-to-slow movement of attachment.
Example: If you move the slider switch half way, the attachment will move at approximately one-half the speed.

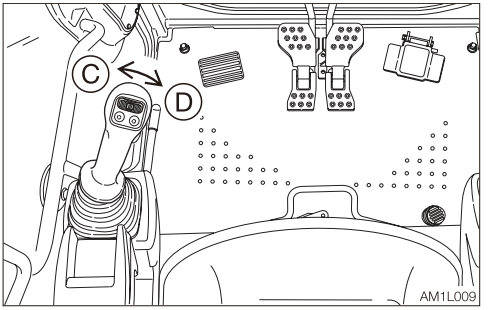

Move this switch to control the flow of the oil in the second auxiliary hydraulic lines.
(C): .....Hydraulic oil flows to the left auxiliary line (c).
(D): .....Hydraulic oil flows to the right auxiliary line (d).

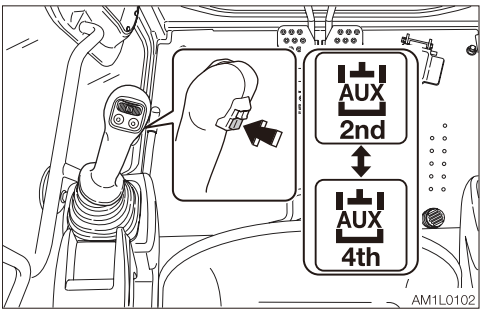

To use the auxiliary 4th hydraulic line, press the auxiliary 2/4 select button to change to the operation of the auxiliary 4th.
Refer to “Auxiliary hydraulic lines (If equipped)” on pages 2-114 to 2-119.

AUXILIARY 2/4 SELECT BUTTON

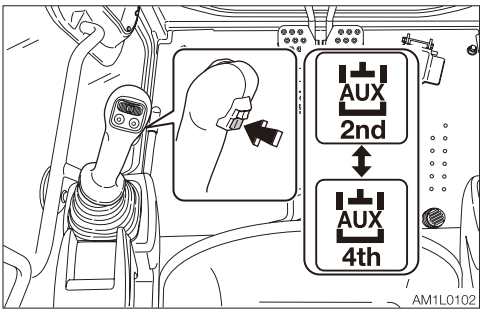

This switch is used to change from the second auxiliary operation to the fourth auxiliary operation.
Pressing this button displays the second auxiliary on the Multi-information display to indicate that the second auxiliary operation is enabled. Pressing this button again displays the auxiliary 4th on the Multi-information display to indicate that the auxiliary 4th operation is enabled.
The actual operation is performed with the auxiliary 2nd/4th switch (slider switch).

OPERATING LEVER SWITCH KIT 1

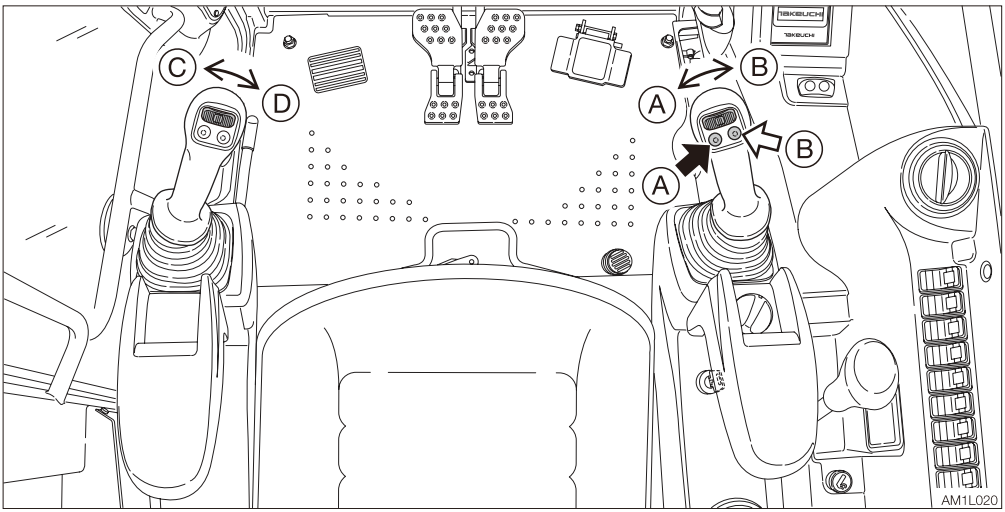

Operating

Press those buttons to control the flow of the oil in the first/second auxiliary hydraulic lines.

(A).....Hydraulic oil flows to left auxiliary line (a).

(B) .....Hydraulic oil flows to right auxiliary line (b).

(C) .....Hydraulic oil flows to left auxiliary line (c).

(D) .....Hydraulic oil flows to right auxiliary line (d).

Refer to “Auxiliary hydraulic lines (If equipped)” on pages 2-114 to 2-119.

Releasing the residual pressure

After the auxiliary hydraulic circuits have been used, pressure remains in the circuits. This is called the residual pressure. Release this residual pressure before disconnecting the lines.

Perform the residual pressure releasing within 10 minutes after the engine stopping.

1. Park the machine on a flat, rigid and safe ground.
2. Stop the engine.
3. Lower the safety lock lever to the unlocked position.
4. Turn the starter switch to the ON position.
5. Press the auxiliary hydraulic switches several times to release the residual pressure in the auxiliary hydraulic circuitry.

TRAVEL ALARM

The alarm sounds in the following cases.

Upperstructure position warning lamp	Forward travel	Reverse travel
Off		✓
On	✓	✓

If the alarm does not sound, the fuse may be blown. Inspect the fuses.

⚠ WARNING

If the fuse blows again soon after replacement, then the electric system is likely faulty. It may pose a fire hazard if not properly repaired. Contact your sales or service dealer for advice.

1. Turn the starter key to the OFF position to stop the engine.

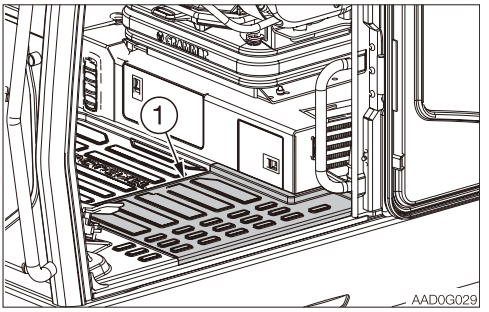

2. Remove the floor mat (1).

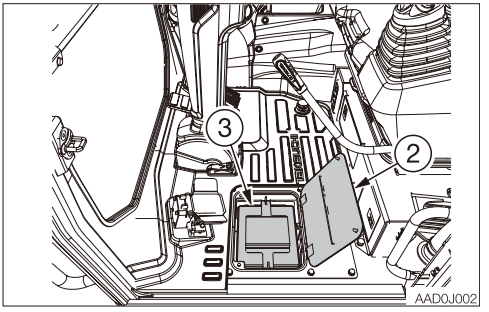

3. Open the cover (2).
4. Remove the fuse box cover (3).
5. Check for any blown fuses.

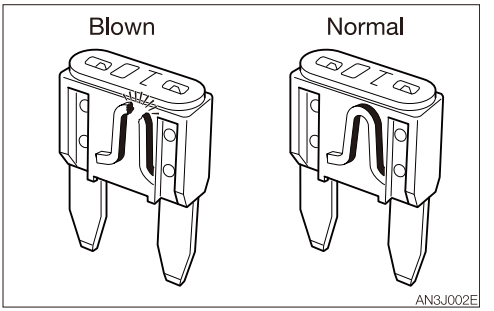

6. If a fuse is blown, replace it with a spare fuse of the same capacity.

Fuse layout and circuits protected

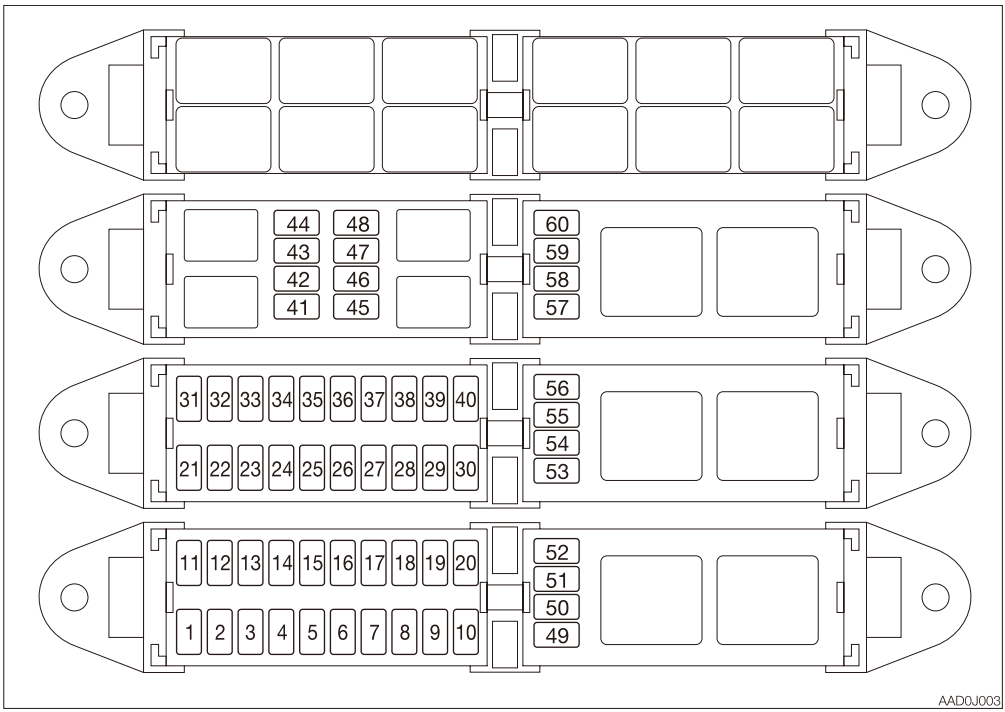

No.	Capacity	Symbol	Protected circuit	Fuse No.
1	30A		ECU	F101
2	30A		SCR controller	F102
3	10A		Feed pump	F103
4	10A		Refill switch	F104
5	3A		GPS	F105
6	25A		Main controller_Power supply, Travel alarm	F106
7	10A		Starter switch	F107
8	10A		Horn	F108
9	10A		Cab	F109
10	10A		Turn signal	F110
11	15A		Headlight	F111
12	10A		Position light	F112

No.	Capacity	Symbol	Protected circuit	Fuse No.
13	20A		Fuel supply pump	F113
14	5A	OPT (A)	Option (A)	F114
15	20A	OPT (B)	Option (B)	F115
16	5A	OPT (C)	Option (C)	F116
17	20A	OPT (D)	Option (D)	F117
18	10A		Urea tank	F118
19	10A	CTL (1)	Main controller	F119
20	5A		Glow signal	F120
21	10A		Beacon	F201
22	15A	CTL (DC2)	Controller (DC2)	F202
23	10A	CTL (QCM)	Controller (QCM)	F203
24	15A	OPT (1)	Option (1)	F204
25	15A	OPT (2)	Option (2)	F205
26	7.5A	OPT (E)	Option (E)	F206
27	5A	OPT (F)	Option (F)	F207
28	15A	OPT (G)	Option (G)	F208
29	5A	OPT (H)	Option (H)	F209
30	7.5A	OPT (I)	Option (I)	F210
31	10A		Wiper	F211
32	10A	CAB (ACC)	Cab (ACC)	F212
33	5A		Servo motor	F213
34	15A		Blower	F214
35	10A		Compressor	F215
36	10A	AUTO	Auto greasing	F216
37	20A		Seat suspension	F217
38	15A		Seat heater	F218
39	7.5A		Rear light	F219
40	-	-	-	F220
41	10A	(LEFT)	Headlight_Low (Left)	F301

No.	Capacity	Symbol	Protected circuit	Fuse No.
42	10A	(RIGHT)	Headlight_Low (Right)	F302
43	10A	(LEFT)	Headlight_High (Left)	F303
44	10A	(RIGHT)	Headlight_High (Right)	F304
45	5A		Front position light (inside headlight)	F305
46	5A	(LEFT)	Rear position light (Left)	F306
47	5A	(RIGHT)	Rear position light (Right)	F307
48	5A	(OPT)	ATT position light (Option)	F308
49	10A		Cluster	F501
50	5A*		Joystick steering	F502
51	15A	NOx	NOx sensor	F503
52	5A		Throttle valve	F504
53	15A	CTL (2)	Controller (2nd)	F601
54	15A	CTL (UC)	Controller (UC)	F602
55	15A		Working light	F603
56	-	-	-	F604
57	5A		Anti theft (ACC)	F701
58	10A		Lever lock	F702
59	-	-	-	F703
60	15A	OPT (24V)	Socket (24V)	F704

*: If equipped

TAKEUCHI SECURITY SYSTEM

The Takeuchi Security System is a system that allows only registered starter keys to be used for starting the engine.
The engine cannot be started with any unregistered or counterfeit starter keys. If a registered starter key is lost or stolen, you can set the system to delete the registered key information, so that the lost or stolen key cannot be used to start the engine. Although machine theft cannot be completely prevented, the system certainly helps reduce the risk of theft.

STARTER KEY

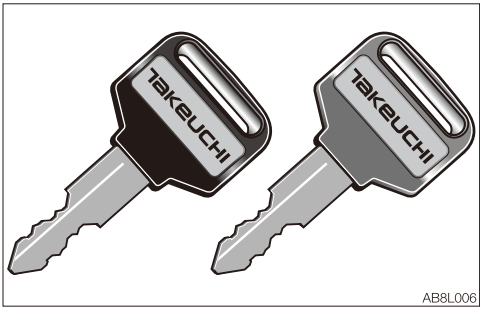

There are two types of starter key, red and black, which can be registered in the Takeuchi Security System.
The red key is the master key. The black key is the starting key.

STARTING THE ENGINE

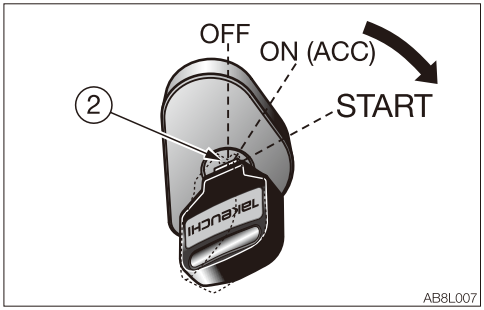

The engine can be started using the normal method with a registered BLACK key.
The engine cannot be started using the RED master key.
Refer to Chapter 3, “Starting and stopping the engine”.

If an attempt is made to start the engine with an unregistered key:

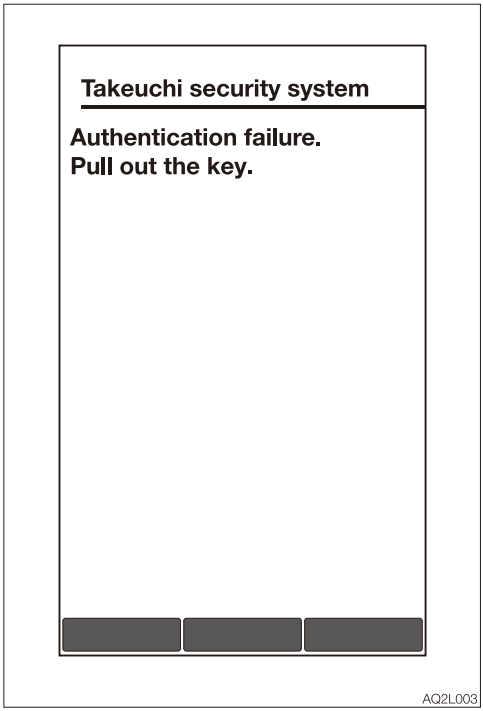

If an unregistered starter key is turned from the OFF to the ON (ACC) position, the message “Authentication failure” appears and the alarm starts sounding.
If this attempt is repeated five times in a row, the horn sounds for two minutes, and the engine cannot be started. The horn stops when the key is turned to the OFF position.

REGISTERING AND DELETING THE STARTER KEY

⚠ WARNING

- **Sit on the operator's seat.**
- **Raise the safety lock lever to the locked position.**
- **Clear all people from the machine and the area.**
- **Sound the horn to warn people around the machine.**

Registration may fail if the starter key is on a keyring or keychain; remove it before starting registration.
A malfunction could occur if multiple starter keys are brought near to the key cylinder. Be sure that no starter keys other than the correct key are near the key cylinder during registration.

Starter key registration procedure
For Steps 1 to 6 below, complete each step and proceed to the next one within five minutes. If no operation is performed for five minutes during this procedure, the system returns to the initial state.
From Step 7 onward, the system automatically ends the operation if no operation is performed for five minutes.

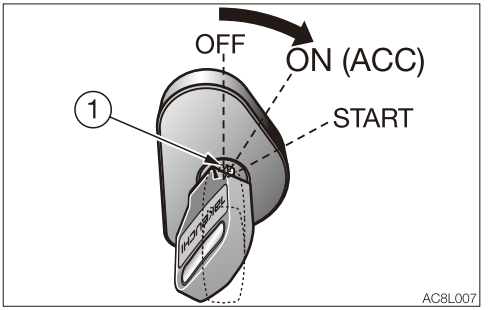

1. Insert the master key (1) into the starter switch and turn the key from the OFF to the ON (ACC) position.

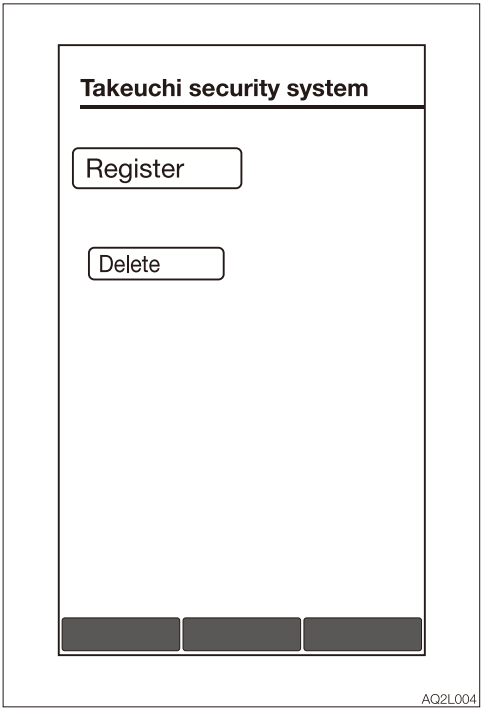

2. Select “Register”.

Touch operation
Tap the item to be selected.

Dial operation
Use the up/down of the dial to select the item, and then press the dial to confirm.
(The selected item is displayed enlarged.)

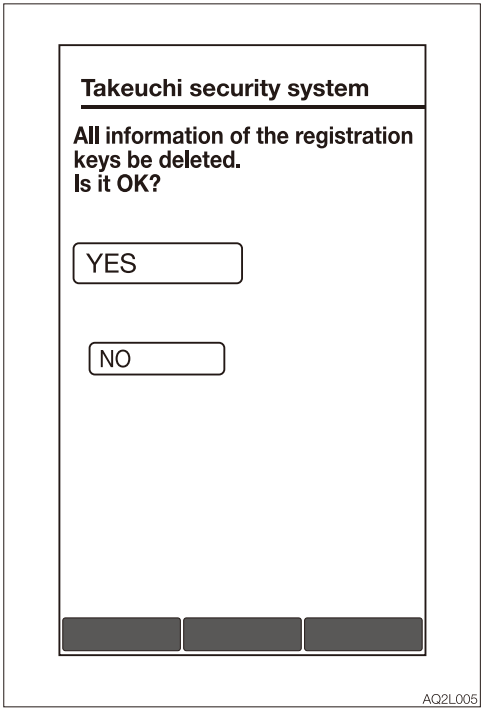

3. Select whether to delete all of the existing registration information on the starter key.

Touch operation
Tap the item to be selected.

Dial operation
Use the up/down of the dial to select the item, and then press the dial to confirm.
(The selected item is displayed enlarged.)

YES: All registration information on the starter key will be deleted; register a new key.
NO: A new starter key will be added to the existing registration information.

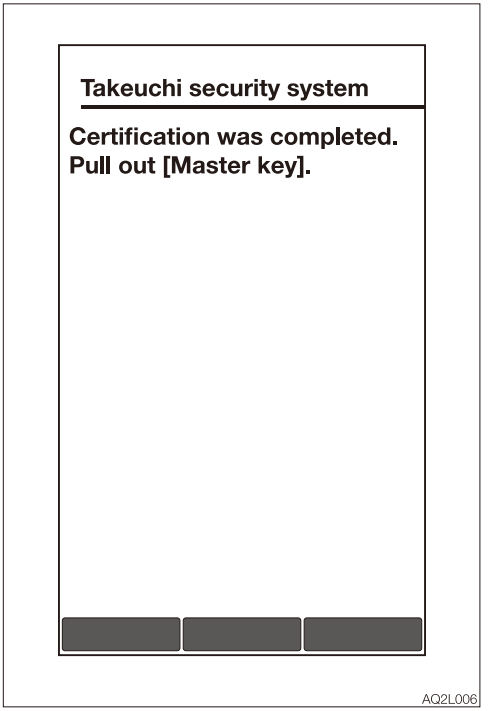

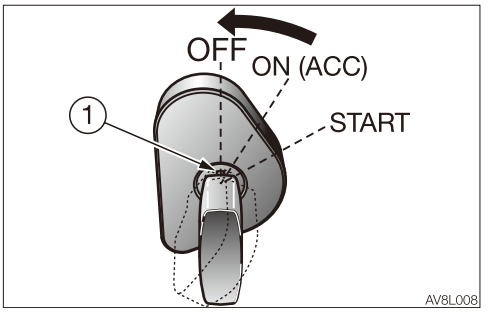

4. When the message “Certification was completed” appears on the LCD, turn the master key (1) from the ON (ACC) to the OFF position, and then remove it from the starter switch.
   Up to 13 starter keys can be registered.

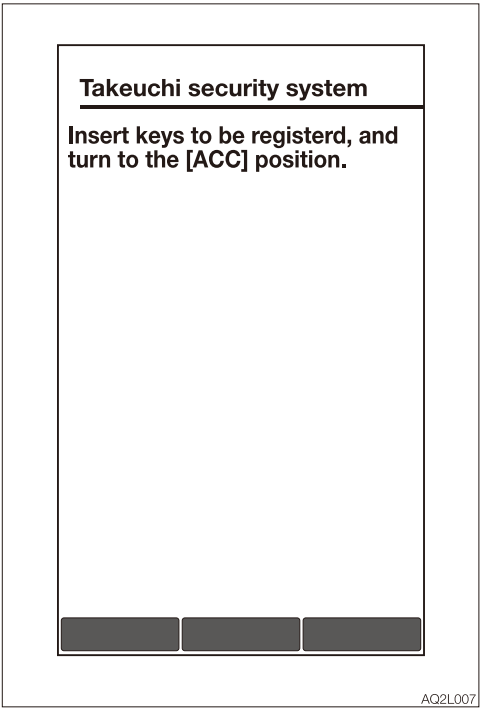

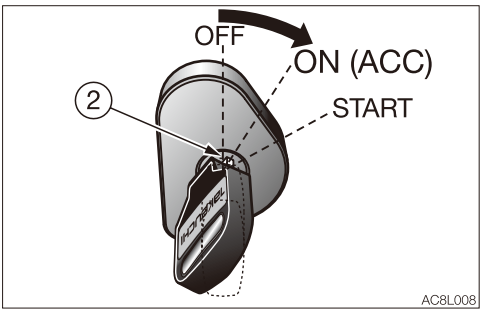

5. Insert the starter key (2) to be registered into the starter switch and turn the key from the OFF to the ON (ACC) position.

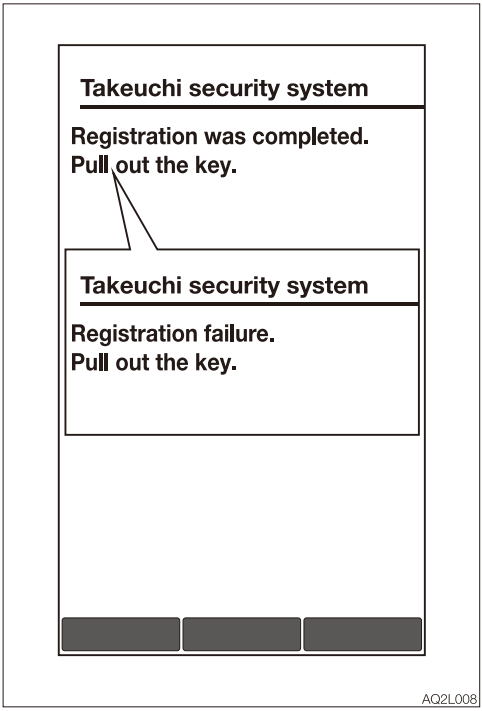

6. If the registration was successfully completed, the message “Registration was completed” appears. This means that the starter key (2) currently inserted has been registered.
   If the registration fails, the message “Registration failure” appears.

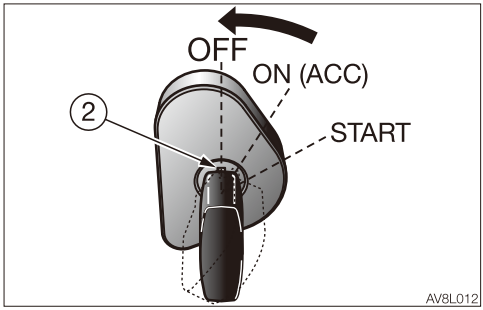

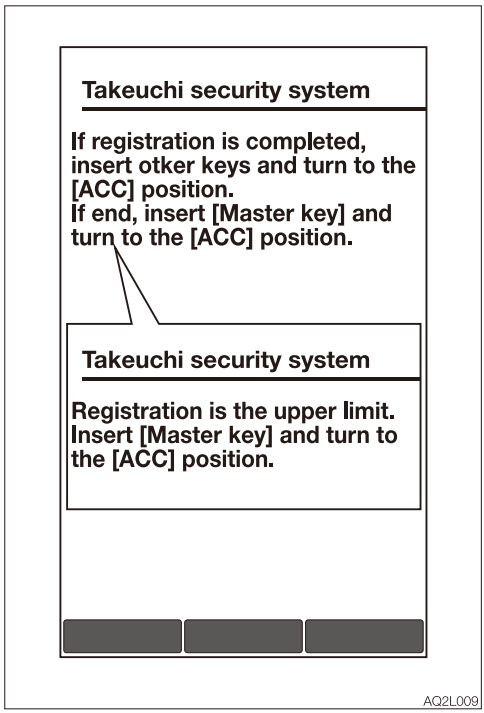

7. Turn the starter key (2) from the ON (ACC) to the OFF position, and then remove it from the starter switch.
   To continue registration, repeat the steps from Step 5.
   To end registration, proceed to Step 8.

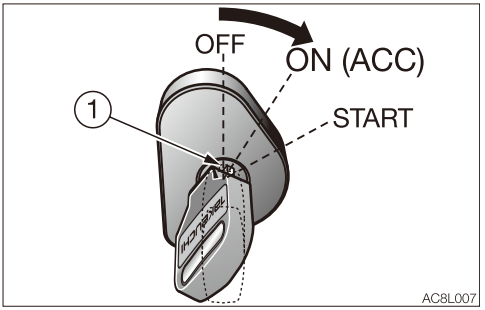

8. Insert the master key (1) into the starter switch and turn the key from the OFF to the ON (ACC) position. Or, wait for five minutes or more.

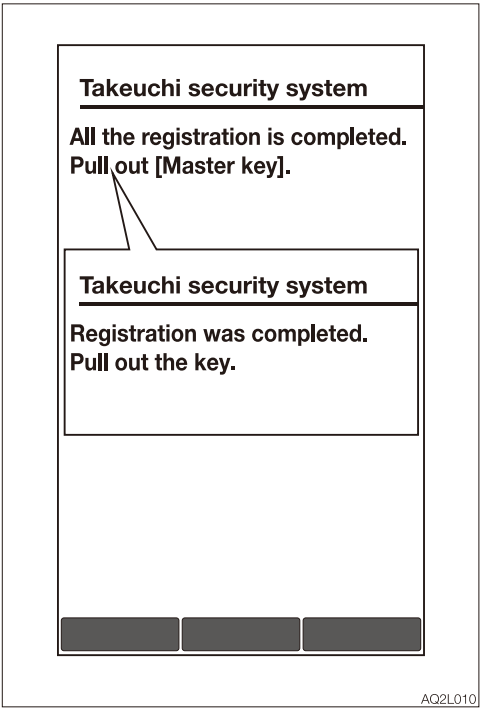

9. If any starter key has been registered, the message “All the registration is completed” appears. Turn the master key (1) from the ON (ACC) to the OFF position, and then remove it from the starter switch to complete the registration.
   If no starter key has been registered, the message “Registration failure” appears, and the registration information is returned to the initial state.

Deleting a registered starter key
The information of each registered starter key can be deleted to cancel its ability to start the engine.

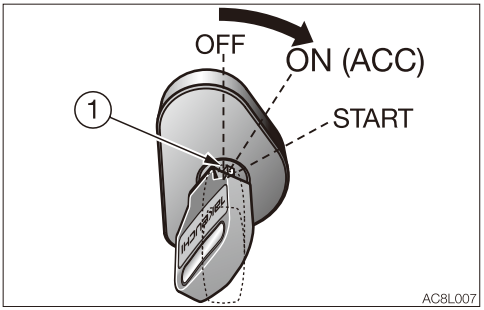

1. Insert the master key (1) into the starter switch and turn the key from the OFF to the ON (ACC) position.

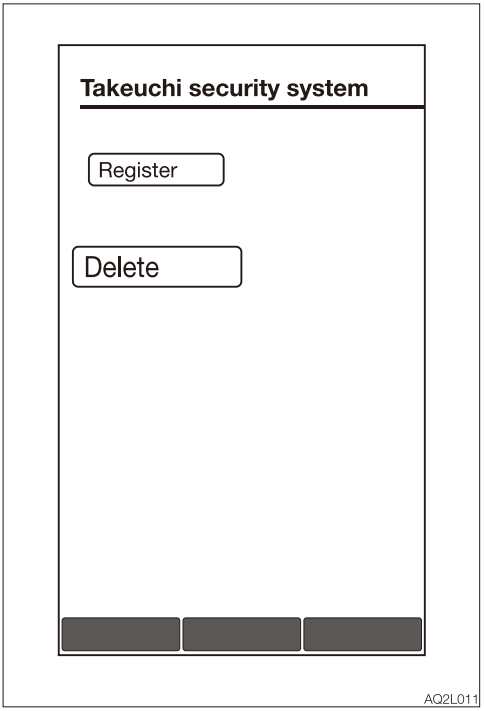

2. Select “Delete”.

Touch operation
Tap the item to be selected.

Dial operation
Use the up/down of the dial to select the item, and then press the dial to confirm. (The selected item is displayed enlarged.)

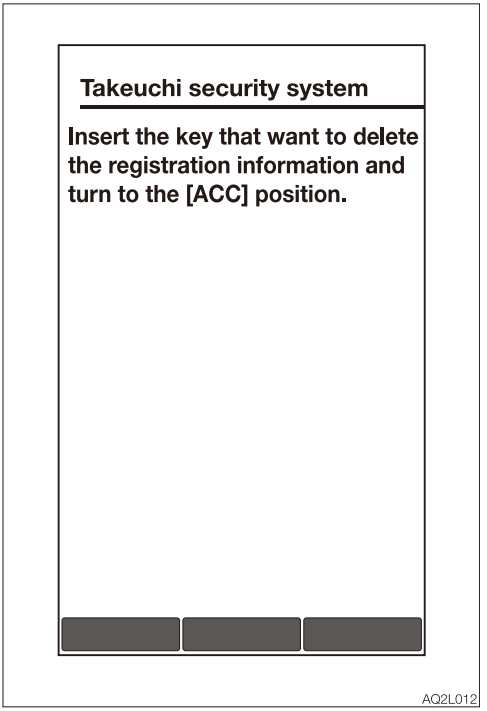

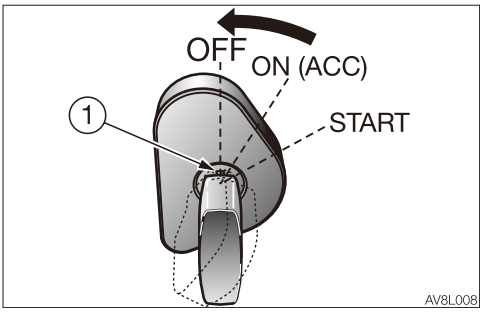

3. When the display shown as the illustration appears on the LCD, turn the master key (1) from the ON (ACC) to the OFF position, and then remove it from the starter switch.
   Note: If the registered key is lost and you want to delete all registration information, please refer to STEP 3 on page 8-25.

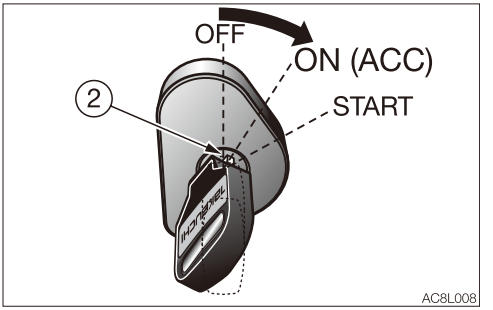

4. Insert the starter key (2) to be deleted into the starter switch and turn the key from the OFF to the ON (ACC) position.

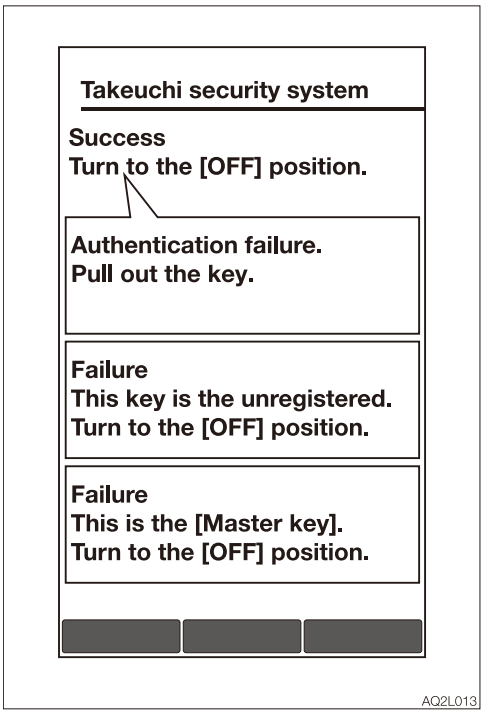

5. If the deletion is successful, the message “Success” appears. This means that the information registered for the starter key (2) currently inserted has been deleted.
   If the deletion fails, the message “Failure” or “Authentication failure” appears on the LCD. Remove the starter key, and then repeat the steps from Step 1 again.

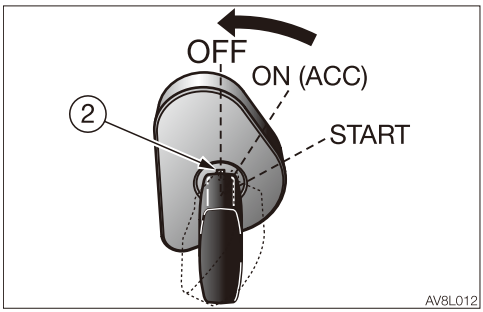

6. Turn the starter key (2) from the ON (ACC) to the OFF position, and then remove it from the starter switch.
   To continue deletion, repeat the steps from Step 1.

IF THE MASTER KEY IS LOST

If you lose your master key, contact your service or sales dealer for assistance.

COUNTRIES WHERE THE SYSTEM CAN BE USED

To use the Takeuchi Security System, “radio wave authentication” must be obtained in the country where the system is to be used. The system can be used in the countries listed below, as of January 2017. Do not use the system in other countries. For details on how to disable the system, please contact your service or sales dealer for assistance.

Countries where the system can be used:
Ireland, Italy, UK, Estonia, Austria, Holland, Cyprus, Greece, Croatia, Sweden, Spain, Slovakia, Slovenia, Czech, Denmark, Germany, Hungary, Finland, France, Bulgaria, Belgium, Poland, Portugal, Malta, Latvia, Lithuania, Rumania, Luxemburg, Iceland, Norway, Liechtenstein, Switzerland, Turkey

TAKEUCHI FLEET MANAGEMENT (TFM)

⚠ CAUTION

- **Never disassemble the TFM. It may cause injury or failure.**
- **Any damage to the TFM device or wire harness may cause damage to the device and surrounding equipment.**



- Takeuchi Fleet Management (TFM) is a system that manages machine position information, operation information, and machine status using a communication device installed in the machine.
- Machines that support TFM are equipped with communication devices and are labeled as above.
- A communication contract is required to use TFM. Please contact our sales service for information regarding the contract.

IMPORTANT:

- **The TFM equipment has been tested and found to comply with the limits for a Class A and Class B digital device, pursuant to part 15 of the FCC Rules. These limits are designed to provide reasonable protection against signal interference when the equipment is operated in a commercial environment. This equipment generates, uses, and can emit radio frequency energy and, if not installed and used in accordance with the instruction manual, may cause signal interference to radio communications.**
- **Operation of this equipment in a residential area may cause signal interference in which the user may be required to take additional steps to correct the interference. To correct any interference issue, move the TFM equipped machine away from the affected device, or, if possible; relocate the affected device away from the TFM equipped machine.**
- **The TFM device uses mobile communication. Therefore, it may not function properly in places where the signal is weak (buildings, tunnels, underground, etc.).**
- **The TFM device complies with the RF radiation exposure limits of the FCC Rules. The product is tested for a separation distance of 0 mm from human bodies. It is advised for those with specific sensitive conditions to avoid close device-body exposure.**
- **Please be aware that storing a machine long-term may result in the loss of communication from the TFM device if its internal battery is drained.**
- **The TFM device consumes a small amount of machine battery power even when the key is in the OFF position. For extended storage, see “Maintenance during extended storage period” on page 5-90.**

Specification

M7H (For Europe)

Frequency	Power
UMTS/HSPA:	
900 MHz	0.25 W
2100 MHz	0.25 W
GSM/GPRS:	
900 MHz	2 W
1800 MHz	1 W
GSM/EDGE:	
900 MHz	0.5 W
1800 MHz	0.4 W

M7L (For North America)

Frequency	Power
LTE Band:	
700 MHz	0.2 W
850 MHz	0.2 W
1700 MHz (AWS)	0.2 W
1900 MHz	0.2 W
UMTS Band:	
850 MHz	0.25 W
1900 MHz	0.25 W

M7MG

Frequency	Power
LTE Band:	
700 MHz	0.2 W
850 MHz	0.2 W
1700 MHz (AWS)	0.2 W
1900 MHz	0.2 W
UMTS Band:	
850 MHz	0.25 W
1900 MHz	0.25 W

MUD GUARD

IMPORTANT:

- **Do not work on the muddy area where the mud guard touches on the ground. The mud guard may get caught and being damaged.**
- **Be careful not to let the bucket hit the mud guard and fixture. Do not get on the mud guard.**

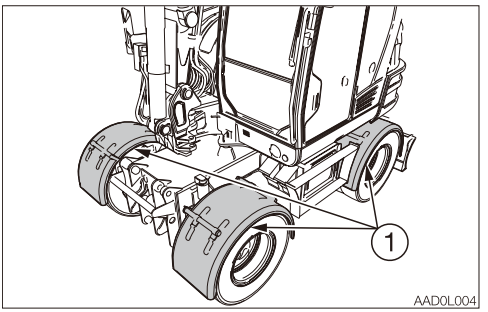

Install the mud guard (1) to prevent mud from attaching on the light and front glasses when spattering.

SERVICE PORT 4 (INDEPENDENT) WITH MULTI-FUNCTIONAL GRIPS

⚠ WARNING

Before starting operation, carefully check which operation pattern you are going to use. If the operation pattern is changed, change the operation decals affixed to the machine. Failure to do so could cause an accident due to misoperation.
Refer to “Operation decal” on page 8-38.

By using these multi-functional grips, you can operate the auxiliary 2nd and 4th at the same time without pressing the switching button between the 2nd and 4th, which is usually necessary for the system equipped with the auxiliary 4th. The operation pattern described below is the default pattern. This default pattern is set at the factory. To change the operation pattern, contact your sales or service dealer for advice.

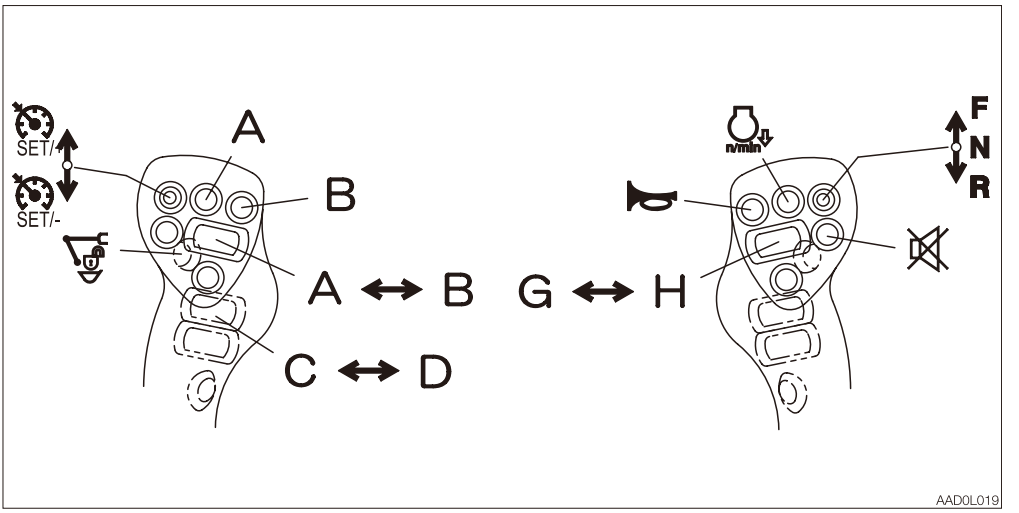

A	Auxiliary 1st hydraulic line (a) operation Refer to “Auxiliary 1st switches” on page 2-72.	B	Auxiliary 1st hydraulic line (b) operation Refer to “Auxiliary 1st switches” on page 2-72.
C	Auxiliary 2nd hydraulic line (c) operation Refer to “Auxiliary 2nd/4th switch (If equipped)” on page 2-73.	D	Auxiliary 2nd hydraulic line (d) operation Refer to “Auxiliary 2nd/4th switch (If equipped)” on page 2-73.
G	Auxiliary 4th hydraulic line (g) operation Refer to “Auxiliary 2nd/4th switch (If equipped)” on page 2-73.	H	Auxiliary 4th hydraulic line (h) operation Refer to “Auxiliary 2nd/4th switch (If equipped)” on page 2-73.
	Auxiliary 3rd hydraulic line operation Refer to “Third auxiliary hydraulic switch and button (If equipped)” on page 2-118.		Deceleration operation Refer to “Deceleration button” on page 2-70.
	Second boom raise operation. Refer to “Boom swing/second boom pedal”on page 2-89.		Second boom lower operation. Refer to “Boom swing/second boom pedal”on page 2-89.
	Blade lower operation. Refer to “Blade lever” on page 2-90.		Blade raise operation. Refer to “Blade lever” on page 2-90.
	Radio mute operation. Refer to “Radio” on page 2-102.		Tiltrotator operation.
	Tiltrotator operation.		Tiltrotator operation.
	Tiltrotator operation.		

OPERATION DECAL

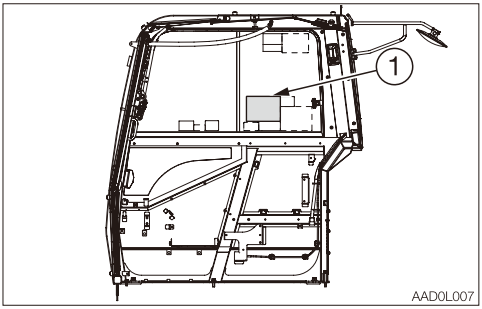

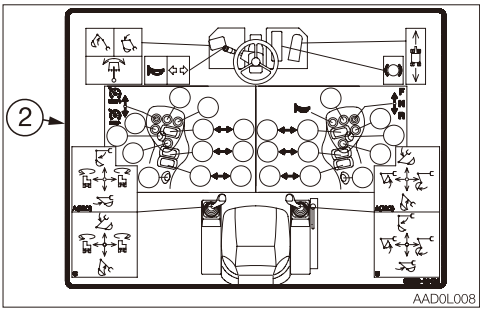

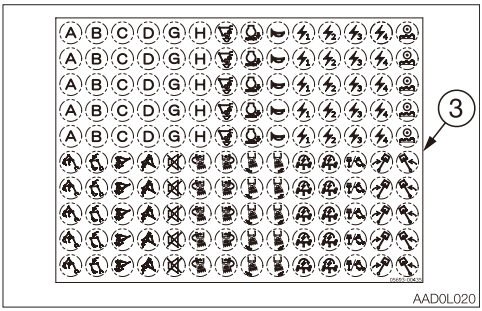

If the operation pattern is changed, the operation decal (1) must be changed. Create the new operation decals using the decal kit (2, 3). According to the operation pattern set, stick the symbols (3) onto the base decals (2). To purchase a decal kit (2, 3), contact your sales or service dealer.

Operation decal (2)
Parts No.: 05693-00436

Symbols (3)
Parts No.: 05693-00435

JOYSTICK STEERING

⚠ WARNING

Check the direction of the undercarriage before working. Remember that when the steering device (1) is at the rear of the operator's seat, the steering wheel must be operated in the opposite direction from when the steering device (1) is at the front.

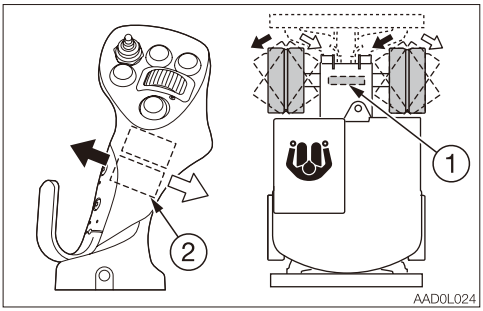

When the joystick steering function is enabled, the steering can be performed with the slider switch (2) on the left control lever. The steering operation and attachment control can be performed at the same time with this function, and the working efficiency is improved.

Note:
The joystick steering function is enabled in the conditions below.
- Engine is running
- Safety lock lever is in the unlock position
- Gear 1
- Joystick steering switch is ON

ENABLE FUNCTION

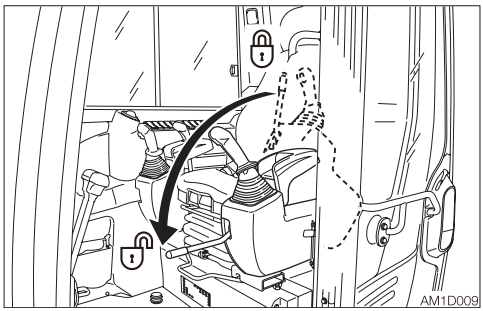

1. Fully lower the safety lock lever to the unlock position while the engine is running.

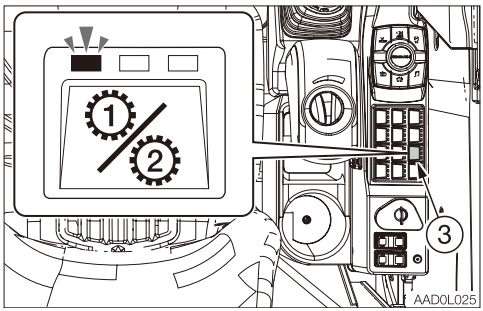

2. Press the gear shift switch (3) to select Gear 1.

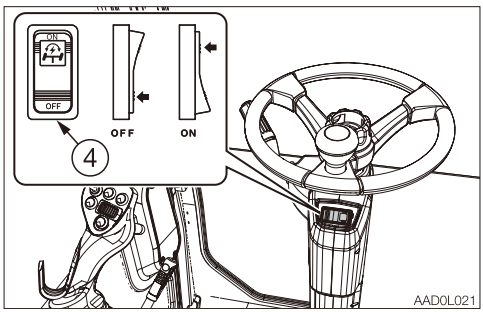

3. Turn on the joystick steering switch (4).

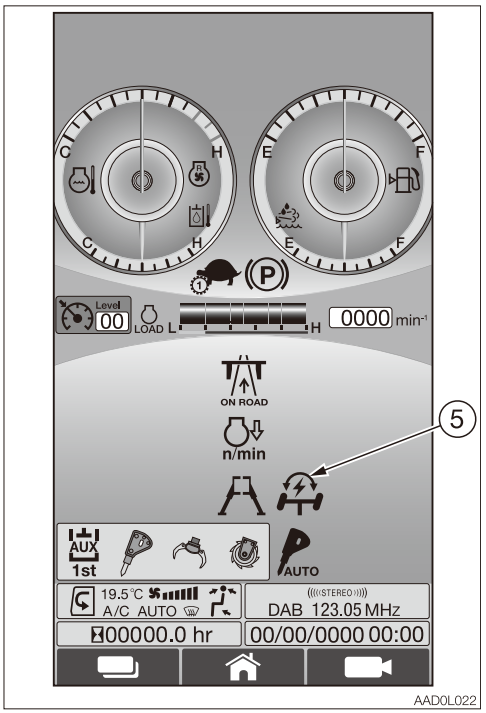

4. The joystick steering function is enabled, and the multi-information display indicator lamp (5) changes from gray to green.

Indicator

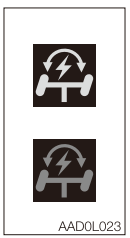

..... Function disabled (Gray)

..... Function enabled (Green)

First Published June 2022
Sixteenth Published January 2026

AAD0EN015

OPERATOR'S MANUAL

TB395W Hydraulic excavator

Edited and issued by TAKEUCHI MFG. CO., LTD.

ZTR Control Systems, LLC

955 Green Valley Road
London, Ontario, N6N 1E4
Tel: 1-519-452-1233
FAX: 1-519-452-7764

www.ztr.com
info@ztr.com

April 5, 2019

RE: M7H

To whom it may concern,

This letter is to confirm that ZTR product **M7H** sufficiently demonstrate compliance to CE and the Radio Equipment Directives (RED). The M7H satisfies all the technical regulations applicable to the product within the scope of Council Directives 2014/53/EU, 2015/35/EU and 2014/30/EU. The following tests were completed successfully.

EN 60950-1: 2006+A11: 2009+A1: 2010+A12: 2011+A2: 2013
EN62311:2008
ETSI EN 300 328 V2.1.1 (2016-05)
ETSI EN 303 413 V1.1.1 (2017-06)
Draft ETSI EN 301 489-52 V1.1.0 (2016-11)
Draft ETSI EN 301 489-17 V3.2.0 (2017-03)
Draft ETSI EN 301 489-1 V2.2.0 (2017-03)
Draft ETSI EN 301 489-19 V2.1.0 (2017-03)
EN 55032: 2015
ETSI EN 301 511 V12.5.1 (2017-03)
ETSI EN 301 908-1 V11.1.1 (2016-07)
ETSI EN 301 908-2 V11.1.2 (2017-08)

(Title(s) of regulations, standards, etc.)

All essential radio test suites have been carried out.

The tests were carried out by a notarized 3rd party certification lab MiCOM Labs inc.

This Declaration of Conformity is issued under the sole responsibility of ZTR Control Systems (or the manufacturer).

Please direct any test results questions or concern to ZTR's Engineering Group for clarification.

Regards,

Brent Horne
Director of Product Development
ZTR Control Systems

Trackunit Aps
Gasvaerksvej 24 4.sal, 9000 Aalborg, Denmark
www.trackunit.com

EU declaration of conformity

Hereby, Trackunit Aps declares that the radio equipment type **Trackunit M7MG** complies with the essential requirements of Directive 2014/53/EU.

3.1 (a) protection of health and safety of persons and of domestic animals and the protection of property, including the objectives with respect to safety requirements set out in Directive 2014/35/EU

Standard used: EN 62368-1:2020+A11:2020
EN 62311:2020
EN 62133-2:2012

3.1 (b) adequate level of electromagnetic compatibility as set out in Directive 2014/30/EU

Standard used: EN 301 489-1 V2.2.3
EN 301 489-17 V3.2.4
EN 301 489-19 V2.2.0
EN 301 489-52 V1.2.1

3.2 the equipment is so constructed that it both effectively uses and supports the efficient use of radio spectrum in order to avoid harmful interference.

Spectrum used:	Bluetooth:	2,402 – 2,480 GHz,	Max. 10 dBm EIRP
	Positioning:	1,559 – 1,610 GHz,	Receive only
	Cellular 4G:	B1, B3, B5, B8, B20, B28,	Max. 27 dBm EIRP
	Cellular 2G:	GSM/GPRS/EDGE; 900 / 1800	Max. 33 dBm EIRP

Standard used: EN 300 328 V2.2.2
EN 303 413 V1.2.1
EN 301 511 V12.5.1
EN 301 908-1 V13.1.1
EN 301 908-13 V13.1.1

Complies with the essential requirements of Directive 2011/65/EU and Directive 2015/863/EU on the Restriction of use of certain Hazardous Substances (RoHS 3).

Complies with the essential requirements of the Regulation 1907/2006/EC regarding Registration, Evaluation, Authorization and Restriction of Chemicals (REACh).

Complies with Directive 2012/19/EU on Waste Electrical and Electronic Equipment (WEEE).

Signed for and on behalf of Trackunit Aps
Aalborg, 01 December 2022

DocuSigned by:
Søren Brogaard
DBFCD953D519425...

Søren Brogaard, CEO

ASAHI DENSO

6-2-1 Somejidai, Hamakita-ku, Hamamatsu, Shizuoka 434-0046, Japan

EU DECLARATION of CONFORMITY (DoC)

This declaration of conformity is issued under the sole responsibility of the manufacturer:

Name:	ASAHI DENSO CO.,LTD
Address:	6-2-1 Somejidai, Hamakita-ku, Hamamatsu, Shizuoka, 434-0046 Japan

We declare that the DoC is issued under our sole responsibility and belongs to the following product.

Object of the declaration:

Product Name	Immobilizer
Model Name	CZ156
Accessories	N/A

The object of the declaration described above is in conformity with the relevant Union harmonization legislation:

Radio Equipment (RE) Directive (2014/53/EU)

The following harmonized standards and technical specifications have been applied:

Health & Safety (Article 3.1(a)):	EN 60065: 2014
EMC (Article 3.1(b)):	EN 301 489-1 V2.1.1 EN 301 489-3 V2.1.1 (Final draft)
Radio Spectrum (Article 3.2):	EN 300 330 V2.1.1

Japan, Shizuoka	May 29, 2017	Tomohiro Yaguchi
Place of Issue:	Date of Issue:	Tomohiro Yaguchi Section chief Engineering Department

ASAHI DENSO
6-2-1 Somejidai, Hamakita-ku, Hamamatsu, Shizuoka 434-0046, Japan

UK DECLARATION of CONFORMITY (DoC)

This declaration of conformity is issued under the sole responsibility of the manufacturer:

Name:	ASAHI DENSO CO.,LTD.
Address:	6-2-1 Somejidai, Hamakita-ku, Hamamatsu, Shizuoka, 434-0046 Japan

We declare that the DoC is issued under our sole responsibility and belongs to the following product.

Object of the declaration:

Product Name	Immobilizer
Model Name	CZ156
Accessories	N/A

The object of the declaration described above is in conformity with the relevant statutory requirements:

STATUTORY INSTRUMENTS 2017 No. 1206 TELECOMMUNICATIONS (The Radio Equipment Regulations 2017)

The following designated standards and technical specifications have been applied:

Health & Safety (Regulation 6.1(a)):	EN 62368-1: 2014
EMC (Regulation 6.1(b)):	EN 301 489-1 V2.1.1 EN 301 489-3 V2.1.1 (Final draft)
Radio Spectrum (Regulation 6.2):	EN 300 330 V2.1.1

Signed for and on behalf of:

Shizuoka, Japan	September 8, 2021	Tomohiro Yaguchi
Place of Issue:	Date of Issue:	Tomohiro Yaguchi Section chief Engineering Department

Declaration of Conformity

We herewith declare that the following named machine, based on its conception and design, and in the form brought into service is in accordance with the relevant, basic safety and health requirements of the following EU directives. In case of any alteration of the machine not coordinated with us, this certificate loses its validity.

Designation of the machine	Hydraulic Excavator
Manufacturer	TAKEUCHI MFG. CO., LTD 205 Uwadaira, Sakaki-machi, Hanishina-gun, Nagano 389-0605, Japan

Model	TB395W
Engine type	C5VI85EV (e1*2016/1628*2016/1628EV5/D*0188*Δ)
Engine performance	85 kW @ 2200 rpm

The machine is in accordance with the requirements of EU directives:

1) Machine Directive: 2006/42/EC and appendix
2) Electromagnetic Compatibility-Regulation: 2014/30/EU and appendix.
3) Noise Directive: 2000/14/EC (Evaluation procedure according to appendix VI), 2005/88/EC and appendices.
4) Regulations on engine emissions: Regulation (EU) 2016/1628, as last amended by Regulation 2016/1628.

Harmonized norms: EN474-1:2022, EN474-5:2022

Compiler of the technical files:
Romain Loffredi
Takeuchi France S.A.S.
Parc d'Activités des Béthunes
3, avenue de la Mare 95310 SAINT OUEN L'AUMONE,
CS 29258 – SOA

Issued in Sakaki, Japan
Toshiya Takeuchi, President

Declaration of Conformity

We herewith declare that we take full responsibility that the following named machine, based on its conception and design, and in the form brought into service is compliant with the relevant, basic safety and health requirements of the following (UK) enactments. In case of any alteration of the machine not coordinated with us, this certificate loses its validity.

Designation of the machine	Hydraulic Excavator
Manufacturer	TAKEUCHI MFG. CO., LTD 205 Uwadaira, Sakaki-machi, Hanishina-gun, Nagano 389-0605, Japan

Model	TB395W
Engine type	C5VI85EV (e1*2016/1628*2016/1628EV5/D*0188*Δ)
Engine performance	85 kW @ 2200 rpm

The machine is compliant with the following UK enactments:

1) Supply of Machinery (Safety) Regulations 2008 (S.I. 2008/1597)
2) Electromagnetic Compatibility Regulations 2016 (S.I. 2016/1091)
3) Noise Emission in the Environment by Equipment for use Outdoors Regulations 2001 (S.I. 2001/1701)

And the Designated Standards referred to and adopted therein and particularly EN474-1:2022, EN474-5:2022

Compiler of the technical files:
Daniel Bryning (Product Manager)
TAKEUCHI MFG. (UK) Ltd.
Unit E2B, John Boyd Dunlop Drive
Kingsway Business Park Rochdale OL16 4NG

Issued in Sakaki, Japan
Toshiya Takeuchi, President