OPERATOR'S MANUAL

Original instructions

TCR50-2

Serial No. 305400002~

Book No. AAA0EN013

OENTCR50-2_4-XN

CRAWLER DUMPER

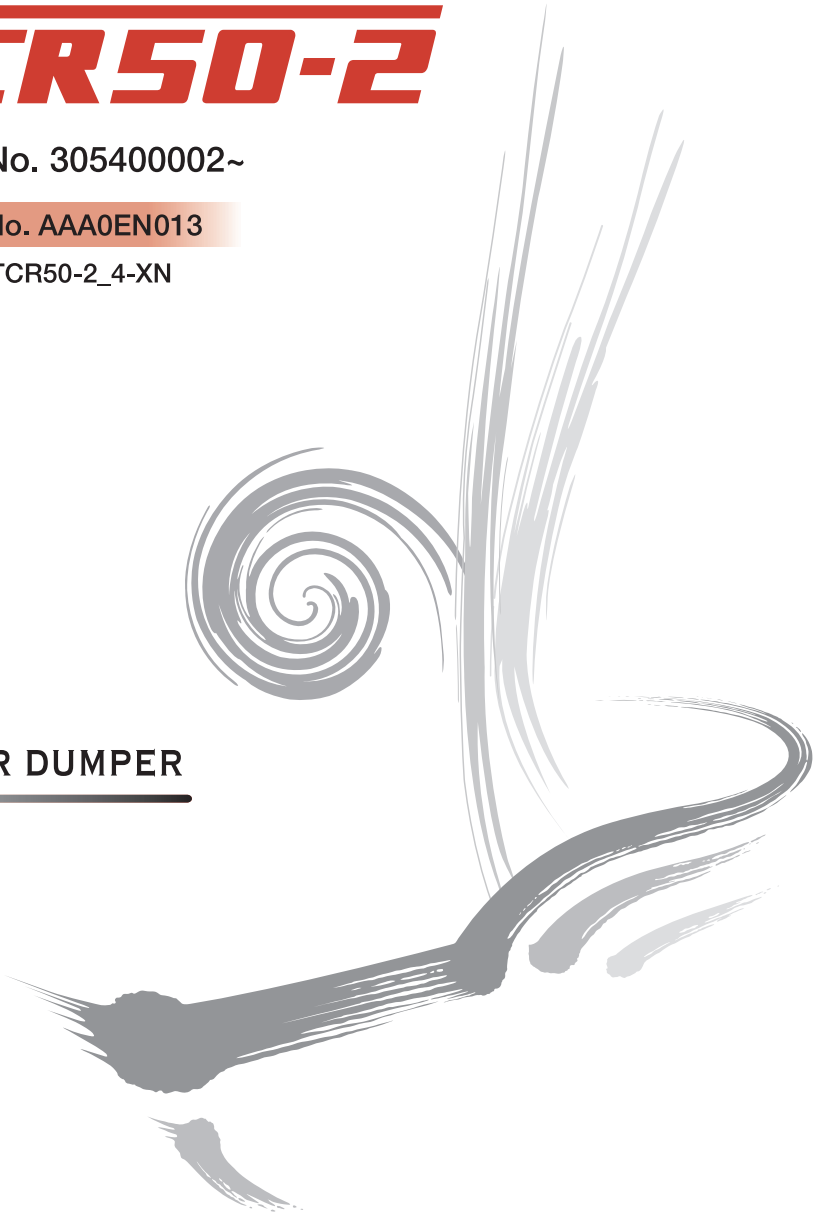

TAKEUCHI

WARNING Read and understand these instructions.
Failure to do so can cause injury or death.

07192-00008

SAFETY ALERT SYMBOL



This symbol represents the safety alert. The message that follows the symbol contains important information about safety.
Read and understand the message to avoid personal injury or death.

It is the owner or employer's responsibility to fully instruct each operator in the proper and safe operation of all equipment. All persons using this machine should thoroughly familiarize themselves with the contents of this manual.

All operators must be instructed on the proper functions of this machine before running the machine.

Learn and practice correct use of the machine controls in a safe, clear area before operating this machine on a job site.

⚠ WARNING

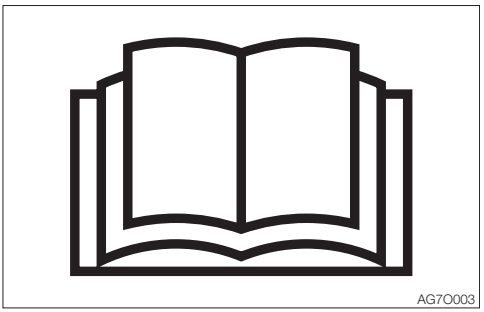

Improper operation, inspection and maintenance of this machine can cause injury or death.
Read and understand this manual before performing any operation, inspection or maintenance on this machine.

Always store this manual near at hand preferably on the machine itself. If it should be lost or damaged, immediately order a new one from your Takeuchi dealer.
When transferring ownership of this machine, be sure to hand this manual to the next owner.

Takeuchi supplies machines complying with the local regulations and standards of the country of export. If your machine has been purchased in another country or from a person or company of another country, it may not have the safety devices or safety standards required for use in your country. Should you have any question about whether your machine complies with the regulations and standards of your country, contact a Takeuchi dealer.

SIGNAL WORDS

Safety messages appearing in this manual and on machine decals are identified by the words “DANGER”, “WARNING” and “CAUTION”. These signal words mean the following:

⚠ DANGER

DANGER indicates a hazard with a high level of risk which, if not avoided, will result in death or serious injury.

⚠ WARNING

WARNING indicates a hazard with a medium level of risk which, if not avoided, could result in death or serious injury.

⚠ CAUTION

CAUTION indicates a hazard with a low level of risk which, if not avoided, could result in minor moderate injury.

IMPORTANT: The word IMPORTANT is used to alert operators and maintenance personnel about situations which could result in damage to the machine and its components.

It is impossible to foresee every possible circumstance that might involve a potential hazard. The warnings in this manual or on the machine can not cover all possible contingencies. You must exercise all due care and follow normal safety procedures when operating the machine so as to ensure that no damage occurs to the machine, its operators or other persons.

INTRODUCTION

FOREWORD

This manual describes operation, inspection and maintenance of the machine, as well as safety instructions to be heeded during these operations.
If you have any questions about the machine, please contact a Takeuchi sales or service outlet.

- Some details in this manual may differ from those provided in the machine you are using.
- Please note that the information and specifications in this manual are subject to change without prior notice.

MANUAL STORAGE COMPARTMENT

A compartment for storing this manual is provided at the position shown on the diagram below.

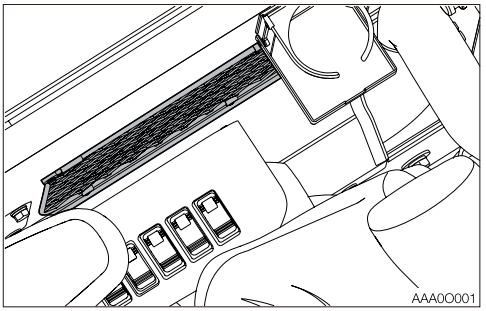

SERIAL NUMBERS

IMPORTANT: Do not remove the machine name plate with the serial number. Check the serial numbers of the machine and engine and write them down in the spaces below.

Machine number:

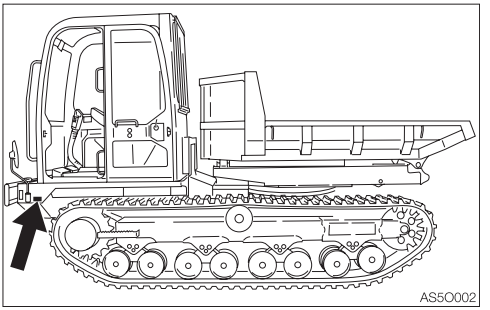

Engine number:

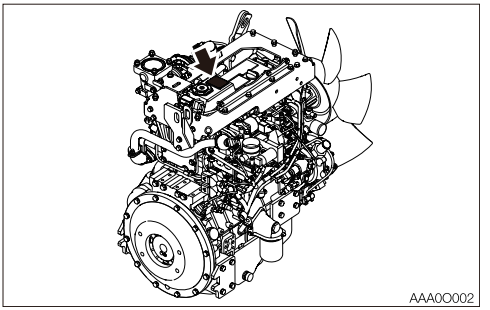

FRONT, REAR, LEFT AND RIGHT

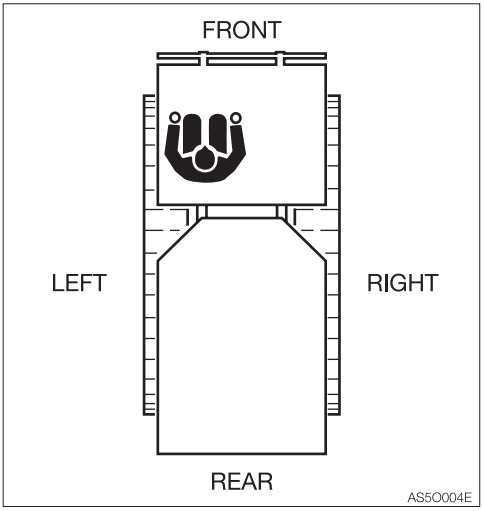

This manual refers the front, rear, left and right of the machine as seen when sitting in the operator's seat.

DESIGNATED OPERATIONS

Use this machine primarily for the following operations:
- Hauling over rough terrain

FEATURES

- Hydrostatic drive system
- Safety structure cab with ROPS/FOPS
- Engine emergency stop system
- Dump body with 90-degree right/left swing
- Low engine noise and exhaust emissions

BREAK-IN PERIOD

When the machine is new, operate the machine for the first 100 hours (as indicated on the hour meter) by following the instructions below.
Using a new machine without a break-in period will lead to quicker deterioration of machine performance and may shorten the machine's service life.
- Sufficiently warm up the engine and hydraulic oil.
- Avoid heavy loads and rapid operations. Operate with a load of about 80% the maximum load.
- Do not abruptly start up, accelerate, change directions, or stop unless necessary.

NOTES ON READING THIS MANUAL

Please note that the descriptions and diagrams included in this manual may not be applicable to your machine.
The numbers used in the illustration are with circles around them. The same numbers appear between the parentheses in the text. (Example: ① → (1))

Symbols used in this manual
The symbols used in this manual have the following meanings.
⃠, ✕ ..... Prohibition
..... Lock
..... Unlock

ABBREVIATION USED IN THIS MANUAL

The abbreviations used in this manual are described below.

DPF ..... Diesel Particulate Filter
PM ..... Particulate Matter
SCR ..... Selective Catalytic Reduction
DEF ..... Diesel Exhaust Fluid
AdBlue® . Registered trademark of the Verband der Automobilindustrie e.V. in Germany.
ECU ..... Engine Control Unit
DQC ..... DEUTZ Quality Class

CONTENTS

Introduction 0-2

Machine description 0-3

Safety 1-1

General precautions 1-2
Precautions when preparing 1-11
Precautions when starting 1-14
Precautions when operating 1-16
Precautions when stopping 1-24
Precautions when transporting 1-25
Precautions on maintenance 1-26
Safety signs (decals) 1-37

Controls 2-1

Names of components 2-2
Covers 2-4
- Ignition key 2-4
- Fuel filler port 2-4
- DEF/AdBlue® refill port 2-5
- Engine hood 2-6
- Side cover (tool box) 2-7
- Battery cover 2-8
- Dump body prop 2-8

Cab 2-9
- Cab door 2-9
- Emergency exit 2-9
- Front window 2-10
- Lower front window 2-11
- Side window 2-12
- Sun visor (if equipped) 2-12
- Emergency hammer (optional) 2-12

Seat and seat belt 2-13
- Seat 2-13
- Seat belt 2-15

Multi-information display 2-16
- Home screen 2-16
- Warning lamps 2-17
- Indicators 2-20
- Screen control key 2-24
- Screen navigation 2-26
- Switching images 2-30

Switches 2-31
- Ignition switch 2-31
- Engine shutdown switch 2-31
- Throttle controller 2-31
- Horn button 2-32
- Deceleration button 2-32
- Turn signal buttons 2-32
- Travel speed button 2-33
- Automatic deceleration switch 2-33
- DPF manual regeneration/inhibit select switch 2-34
- Parking brake switch 2-36
- Working light switch 2-36
- Front wiper switch 2-37
- Washer switch 2-37
- Beacon lamp switch (If equipped) 2-37
- Rear wiper/Washer switch 2-38

Levers and Pedals 2-39
- Safety lock lever 2-39
- Control levers 2-39
- Throttle pedal 2-40

Accessories 2-41
- Air conditioner (If equipped) 2-41
- Heater (If equipped) 2-47
- Cup holder 2-48
- Power supply socket 2-48
- External power socket 2-49
- Interior light 2-49
- Radio (Digital Audio Broadcasting not supported) 2-50
- Radio (Digital Audio Broadcasting supported) 2-62
- Fuel Supply Pump (if equipped) 2-74
- Rear light (if equipped) 2-74
- Mirrors 2-75
- Camera 2-76
- Auto camera mode 2-77

Operation 3-1

Before starting operation 3-2
- Getting on or off the machine 3-2
- Walk-around inspection 3-2
- Daily inspection 3-2

Starting and stopping the engine 3-3
- Before starting the engine 3-3
- Starting the Engine 3-4
- Warming up the engine 3-5
- Stopping the engine 3-5

Operating the machine 3-6
- Lever pattern 3-6
- Warming up the machine (hydraulic oil) 3-8
- Inspection after warm-up 3-9
- Traveling the machine 3-10
- Stopping travel 3-12
- Operating the dump body 3-13

Operating procedures 3-14
- Cautions on operating 3-14

Precautions on using the machine in water 3-15
Precautions when traveling on slopes 3-16
Operations possible with this machine..... 3-17
Parking the machine..... 3-18
Parking..... 3-18
Inspection and checks after stopping the engine..... 3-19
Handling in cold climates..... 3-20
Preparing for cold climates 3-20
Cautions after operations..... 3-20
After the cold climate..... 3-20
Handling rubber tracks 3-21
Prohibitions..... 3-21
Cautions..... 3-22
Preventing the rubber tracks from coming off 3-22
Handling the engine..... 3-24
Prohibitions..... 3-24
Cautions..... 3-24
Diesel fuel..... 3-24

Transport 4-1

Loading and unloading 4-2
Hoisting the machine..... 4-3
Securing the machine..... 4-5

Maintenance.....5-1

General..... 5-2
Maintenance overview 5-2
Cautions on maintenance 5-2
Service data 5-4
Fuel and lubricant table..... 5-4
Handling of DEF/AdBlue® 5-8
List of consumables..... 5-9
List of tools (If equipped)..... 5-10
List of tightening torques 5-11
Safety-critical parts..... 5-12
Maintenance list..... 5-14
Walk-around inspection 5-16
Inspecting by opening the engine hood and covers..... 5-16
Inspecting by walking around the machine..... 5-17
Inspecting while sitting in the operator's seat..... 5-17
Daily inspection (every 10 hours)..... 5-18
Inspecting and replenishing the coolant 5-18
Inspecting and replenishing the engine oil 5-19
Inspecting the water separator 5-20
Inspecting the fuel level..... 5-20
Inspecting the hydraulic oil tank level and replenishing 5-21
Lubricating the dump body and track rollers..... 5-23
Checking the DEF/AdBlue® level and refilling 5-24
After the initial 50 hours (only for new machines)..... 5-27
Replacing the hydraulic oil return filter 5-27
Replacing the pilot line filter..... 5-28
Inspecting and adjusting the fan belt.. 5-29
Inspecting and adjusting the compressor belt (Air conditioner)..... 5-31
Every 50 hours 5-33
Inspecting the track tension..... 5-33
Inspecting the battery fluid level and replenishing 5-34
After the initial 250 hours (only for new machines)..... 5-36
Replacing the travel motor gear oil..... 5-36
Every 250 hours 5-37
Inspecting and adjusting the fan belt.. 5-37
Inspecting and adjusting the compressor belt (Air conditioner)..... 5-37
Draining the water from the fuel tank.. 5-38
Cleaning the air cleaner 5-39
Cleaning the radiator fins and the oil cooler fins..... 5-41
Cleaning the condenser (Air conditioner)..... 5-41
Cleaning the air filters (Air conditioner/ Heater) 5-42
Inspecting the refrigerant (gas) level (Air conditioner)..... 5-43
Lubricating the swing bearing 5-45
Every 500 hours 5-46
Replacing the pilot line filter..... 5-46
Replacing the engine oil and the oil filter 5-46
Replacing the fuel filter..... 5-48
Replacing the water separator filter.... 5-49
Inspecting the slew pinion gear..... 5-49
Replacing the air cleaner element 5-50
Every 1000 hours 5-51
Replacing the hydraulic oil return filter 5-51

Replacing the travel motor gear oil..... 5-51
Replacing the hydraulic oil and cleaning the suction strainer 5-52
Inspecting and adjusting the engine valve clearance..... 5-54
Inspecting the radiator cap 5-54
Every 1500 hours 5-55
Inspecting the crankcase breather system 5-55
Every 2000 hours 5-56
Cleaning the engine cooling system... 5-56
Every 3000 hours 5-58
Inspecting the ECU and related sensors and actuators 5-58
Inspecting the turbocharger (blow wash as necessary) 5-58
Inspecting the DPF and DOC..... 5-58
Inspecting the operation of the air intake throttle valve 5-58
Inspecting the SCR catalyst and related sensors and actuators..... 5-58
Inspecting and replacing the supply module main filter 5-58
Inspecting and cleaning the fuel injector 5-58
When required..... 5-59
Inspecting and replenishing the windshield washer fluid..... 5-59
Lubricating the levers..... 5-59
Draining the water from the water separator..... 5-60
Inspecting and cleaning the DPF soot filter..... 5-60
Inspecting the rubber tracks 5-61
Replacing the rubber tracks..... 5-62
Every 2 years..... 5-64
Replacing the receiver dryer..... 5-64
Maintenance during extended storage period..... 5-65

Troubleshooting 6-1

Symptoms that are not malfunctions 6-2
If the engine overheats..... 6-3
If the battery goes dead..... 6-4
If a fuse blows 6-6
Inspecting and replacing the fuse..... 6-6
Restarting after adding fuel..... 6-12
Bleeding air from the fuel system 6-12
Restarting when the DEF/AdBlue® level is low or the tank is empty 6-13
If a warning lamp flashes 6-14
Vehicle error code list..... 6-16
Engine error code list..... 6-18
Other symptoms..... 6-30
Towing..... 6-33
Lowering the dump body..... 6-34
If the cab is damaged..... 6-35
Exhaust gas control system error..... 6-36
Error code list 6-36
NOx control diagnostic system (NCD) 6-37
Particulate control diagnostic system (PCD) 6-37
Limiting the engine output..... 6-38
Output limitation performed by inducement due to an abnormality detected in the SCR system 6-41
Output limitation performed by inducement due to decreased DEF/AdBlue® tank level 6-44

Specifications 7-1

Basic Specifications..... 7-2
Machine dimensions..... 7-4
Operating ranges..... 7-6

Options 8-1

General precautions 8-2
Safety precautions..... 8-2
Cautions when installing attachments .. 8-2
Precautions when operating attachments 8-3
Optional equipment mass..... 8-4
Takeuchi Security System..... 8-5
Ignition key 8-5
Starting the engine..... 8-5
Registering and deleting the ignition key 8-6
If the master key is lost 8-12
Countries where the system can be used 8-12
Takeuchi Fleet Management (TFM)..... 8-14

REVISION HISTORY

When checking the revision history, refer to the book code (1) on the cover page.

Example:
O EN TB216_E-X b

- Revision history (A to Z, a to z)
- Model code
- Language
- Type
  - O: Operator's Manual
  - W: Workshop Manual

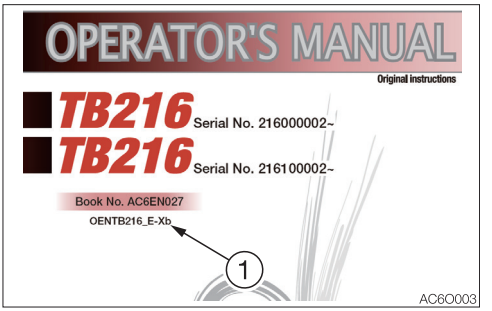

Revision history	Date	Description	Importance
L	05/2024	Changed:	
		Precautions on maintenance 1-26	High
		Replacing the water separator filter..... 5-49	High
		Declaration of Conformity 8-20	High
M	08/2024	Changed:	
		Safety signs (decals) 1-37	High
		Covers..... 2-4	High
		Cab 2-9	High
		Hoisting the machine 4-3	High
		Securing the machine 4-5	High
		Service data 5-4	High
		Basic Specifications..... 7-2	High
		Declaration of Conformity 8-20	High
N	01/2025	Changed:	
		Radio (Digital Audio Broadcasting not supported).. 2-50	High
		Radio (Digital Audio Broadcasting supported)..... 2-62	High

SAFETY



GENERAL PRECAUTIONS

It is your responsibility to observe all pertinent laws and regulations and to follow the manufacture's instructions on machine operation, inspection and maintenance.

Virtually all accidents occur as the result of a failure to observe basic safety rules and precautions.
Most accidents can be prevented by identifying the potentially hazardous situations beforehand.
Read and understand all safety messages which describe how to prevent accidents.
Do not operate the machine until you are sure that you have gained a proper understanding of its operation, inspection and maintenance.

Observe all safety rules

- Operation, inspection and maintenance of this machine must be performed only by a trained and qualified person.
- All rules, regulations, precautions and safety procedures must be understood and followed when performing operation, inspection and maintenance of this machine.
- Do not perform any operation, inspection and maintenance of this machine when under the adverse influence of alcohol, drugs, medication, fatigue or insufficient sleep.

When a problem is found on the machine

If any problem (noise, vibration, smell, disorder of instrument, smoke, oil leak or wrong indication of alarm and panel, etc.) is detected during the operation or inspection and maintenance of the machine, please inform the administrator and take proper actions. Do not operate the machine until the trouble is cleared.

Operating temperature range

To maintain the performance of machine and to prevent it from early wear, observe the following operating conditions.

- Do not operate the machine if the ambient temperature is higher than +45°C (+113°F) or lower than –15°C (+5°F).
  - If operated at an ambient temperature of higher than +45°C (+113°F), the engine may overheat and cause the engine oil to degrade. Also, the hydraulic oil may become very hot, causing damage to the hydraulic equipment.
  - If operated at an ambient temperature of lower than –15°C (+5°F), the parts made of rubber such as gaskets may get hardened to cause an early wear or damage to the machine.
  - If the machine is to be used outside the ambient temperature range described above, consult your sales or a service dealer.

Prohibition of mining operation

This machine does not comply with the mining operation standards. Never use this machine on the mining job site.

Wear appropriate clothing and protective equipment

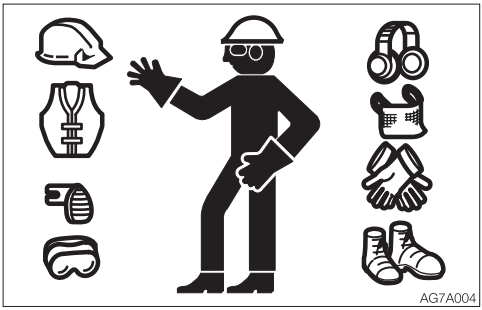

- Do not wear loose clothing or any accessory that can catch on controls or in moving parts.
- Do not wear oily or fuel stained clothing that can easily catch fire.
- Wear a hard hat, safety shoes, safety glasses, filter mask, heavy gloves, ear protection and other protective equipment as required by job conditions. Wear required appropriate equipment such as safety glasses and filter mask when using grinders, hammers or compressed air, as metal fragments or other objects can fly and cause serious injury.
- Use hearing protection when operating the machine. Loud prolonged noise can cause hearing impairments, even the total loss of hearing.

Install a fire extinguisher and first aid kit

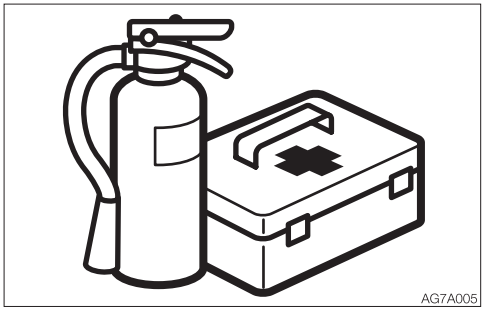

Be prepared for fire and accidents

- Install an extinguisher and a first aid kit, and learn how to use them.
- Lean how to fight a fire and how to deal with accidents.
- Know how to contact emergency assistance and make a list of emergency contacts.

Never remove safety equipment

- Make sure all protective guards, covers, cab and doors are in place and secured. Repair or replace damaged parts before operating the machine.
- Know how to use the safety lock lever, seat belt, dump body prop and other safety equipment and use them properly.
- Never remove any safety equipment except for servicing. Keep all safety equipment in good operating condition.

Use a signal person and a flag person

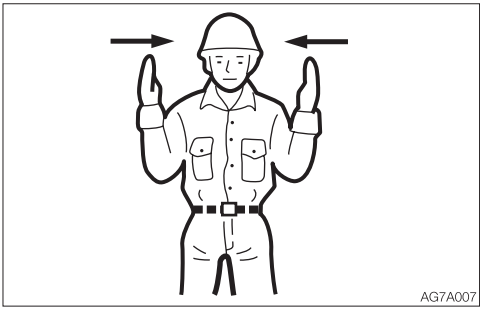

Learn how to use the hand signals required for particular jobs and make sure who has the responsibility for signaling.

- All personnel must fully understand all the signals.
- The operator must respond to signals only from the appointed signal person, but must obey a stop signal at any time from anyone.
- The signal person must stand in a clearly visible location when giving signals.

Cautions when standing up from or leaving the operator's seat

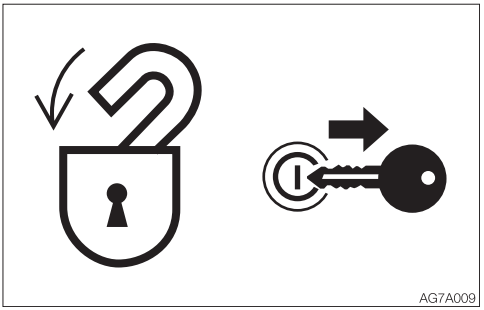

- Before standing up from the operator's seat to open/close the window, remove/install the lower window or adjust the operator's seat, lower the dump body all the way, raise the safety lock lever to engage the lock and stop the engine. If any control is accidentally touched when the safety lock lever is lowered (unlocked), the machine will suddenly move and cause serious injury or death. If it is absolutely necessary to leave the raised dump body unattended, be sure to engage the dump body prop to prevent the dump body from dropping.
- Be careful not to touch the operating levers when raising or lowering the safety lock lever.
- Before leaving the operator's seat, fully lower the dump body, raise the safety lock lever to engage the lock and stop the engine. Also, be sure to remove the key, lock the door and covers, take the key with you and store it in a specified place.

Avoid fire and explosion hazards



Keep flames away from fuel, oil, grease and antifreeze. Fuel is particularly flammable and dangerous.

- When handling these combustible materials, keep lit cigarettes, matches, lighters and other flames or sources of flames away.
- Do not smoke or permit open flames while handling fuel or working on the fuel system.
- Do not leave the location while refilling with fuel or oil.
- Never remove the fuel cap or add fuel when the engine is running or still hot. Also, do not spill the fuel on the hot surface of the machine or the component of the electric system.
- Clean up spilled fuel or oil immediately.
- Check for fuel, oil leak. Stop all leaks and clean the machine before operating.
- When operating with grinder or welding, move inflammables to a safe place.
- Do not cut or weld on pipes or tubes that contain flammable fluids. Clean thoroughly with nonflammable solvent before cutting or welding.
- Remove all trash or debris from the machine. Make sure that oily rags or other flammable material are not stored on the machine.
- Handle all solvents and dry chemicals (foam type fire extinguisher) according to procedures identified on manufacturer's containers. Work in a well-ventilated area.
- Never use fuel for cleaning purposes. Always use a nonflammable solvent.
- When handling the fuel, washing oil or paint, open the door and windows to ventilate thoroughly.
- Store all flammable fluids and materials in a safe and well-ventilated place.
- The short circuit of the electric system may cause the fire. Check for any loosened connections or damage to the wires every day. Retighten the loosened connector and wire clamp. Fix or change the damaged wire.
- Fire from the pipes:
  Make sure that the clamps, guards and cushions of the hoses and tubes are securely fixed. If not, hoses or tubes may be damaged due to vibration or contact with other parts during operation. This can cause the high-pressure oil to spurt out, resulting in the fire or injury.
- Do not perform the DPF regeneration if the machine is surrounded by flammable items such as plants, trees, dry grass, wastepaper, oil and waste tires. There is a risk of fire due to the high-temperature exhaust gas emitted from the DPF.
  DPF: Diesel Particulate Filter

Fire prevention



When working in a certain environment, it is impossible to prevent combustible debris from collecting in the machine. This debris, in itself, may cause a fire; however, when mixed with fuel, oil or grease in a hot or confined place, the danger of fire is greatly increased. The following fire prevention guidelines should be used to supplement the operator's fire prevention efforts. In no case should the guidelines be used, or assumed, as replacements for diligent operator efforts at preventing fires (that include regular schedule of cleaning and inspecting the machine as conditions require).

The following guidelines will help to keep your equipment up and running efficiently and keep the risk of fire to a minimum.

1. Maintain a CHARGED fire extinguisher on or near the machine at all times and KNOW HOW TO USE IT.
2. Remove debris and blow out dust regularly from side air intake areas, engine radiator, hydraulic oil cooler, air conditioning condenser core to prevent overheating of the engine and hydraulics and to maintain efficient operation of the machine.
3. Blow off all accumulated debris near hot engine exhaust components (turbocharger and exhaust manifold as well as exhaust pipes and muffler) at the completion of each work shift or more frequently when working in severe conditions where large amounts of combustible debris are present. Engine exhaust systems provide numerous small pockets where flammable debris can gather. Even small accumulations close to hot exhaust components can ignite and smolder.
4. Clean out all accumulated debris (twigs, pine needles, branches, bark, leaves, saw dust, small wood chips) and any other combustible materials from the under covers inside the machine or the lower machine structure, as well as from areas in proximity to the engine, fuel and hydraulic oil systems, after the completion of each work shift or more frequently.
5. Inspect the machine regularly for any signs of diesel fuel or hydraulic system leakage. Check for worn or damaged fuel or hydraulic lines before starting up any equipment.
6. Clean up any grease, diesel fuel, hydraulic and lubricating oil accumulation and spillage immediately.
7. Steam clean the areas of engine and the under covers at least once a month or more frequently when working in sever conditions where large amounts of combustible debris are present.
8. Use only nonflammable solutions for cleaning the machine and components.
9. Inspect the exhaust system daily for any signs of leakage. Check for worn, cracked, broken or damaged pipes or muffler. Also check for missing or damaged bolts or clamps. Should any exhaust leaks or defective parts be found, repairs must be made immediately. Engine exhaust leaks can cause fires. Do not operate the machine until the exhaust leak is repaired.

10. During daily operation of the machine, the occurrence of exhaust leaks are usually accompanied by a change or increase in engine exhaust noise levels. These audible warnings cannot be ignored. Should any exhaust leaks occur during operation, the machine must be shut down immediately and not put back to work until the necessary repairs have been completed.
11. Before starting repair work, such as welding, the surrounding area should be cleaned and a fire extinguisher should be close by.
12. Do not use the machine on top of or to push piles of burning timber. A machine fire will likely result.

What to do to prepare for a machine fire

- Prevent the fire from happening in the first place by ensuring that all machine systems are frequently inspected and always well maintained.
- Ensure that any hand held fire extinguishers are charged and in working order. Fire extinguishers require routine care. Follow the manufacturer's instructions for inspection and maintenance shown on the label of the fire extinguisher and in the extinguisher manufacturer's manual.
- Ensure that you follow all national, state / provincial and local regulations dealing with fire fighting in effect in your specific geographic region.
- Ensure that all information necessary for you to immediately contact all sources of help (local fire department, etc) in the event of a fire emergency is recorded and readily available at all times.

What to do if a machine fire occurs

If operating the machine when a fire occurs:

1. Fully lower the dump body.
2. Shut the engine off.
3. Exit the machine. Call for help. Be certain to report a fire immediately.
4. At all times ensure your own personal safety and the safety of anyone that may be in the area. Approach any fire with extreme caution. All fires can be very dangerous and life threatening.

Before deciding to fight the fire, be certain that:

1. The fire is small and not rapidly spreading.
2. There is always a clear, safe escape route.
3. You have received training in the use of the available fire extinguishing devices and are confident that you can operate them effectively.

- Be aware that engine coolant, diesel fuel or hydraulic hoses could fail during a fire. If this happens, hot coolant, fuel or oil could possibly be ignited by the fire.
- If in any doubt about whether or not to fight the fire ? DON'T. Instead stand well clear of the fire and wait for help to arrive.

- Use the **PASS** method. This is the most effective use of a fire extinguisher.
  - **P**ull the pin at the top of the extinguisher that keeps the handle from being pressed. Break the plastic seal as the pin is pulled.
  - **A**im the nozzle at the base of the fire. Do not aim the nozzle at the flames. In order to put out the fire, you must extinguish the fuel, not the flames. Hose nozzles are often clipped to the extinguisher body. Release the hose before taking aim.
  - **S**queeze the handle to release the pressurized extinguishing agent. The handle can be released at any time to stop the discharge.
  - **S**weep from side to side at the base of the fire until the fire is completely out or the fire extinguisher is empty.
- Only if you can safely do so, open the access panels to the machine in the area of the fire.
- Failing all attempts to access the machine compartment, discharge the extinguisher through the mesh or any available openings on the machine.
- Ensure that the machine and all components have cooled down sufficiently after a fire so that re-ignition does not occur.
- Remain in the area until help arrives.

What to do after a machine fire has occurred

- Before returning the machine to work.
  1. Ensure that the cause of the fire is determined and all appropriate repairs are completed.
  2. Ensure that all extinguishers used in fighting the fire are replaced or recharged.
- Notify your equipment dealer and/or Takeuchi Manufacturing.

Exhaust fumes from the engine are poisonous

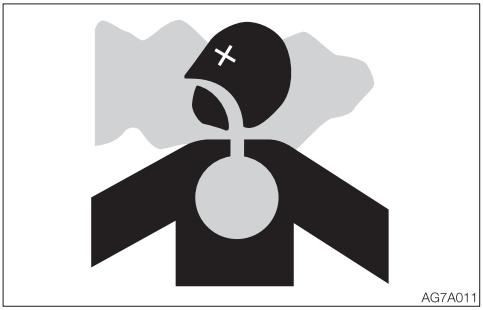

- Do not operate the engine in an enclosed area without adequate ventilation.
- If natural ventilation is not possible, install ventilators, fans, exhaust extension pipes or other venting devices.
- Do not perform the DPF regeneration in poorly-ventilated indoor spaces, as smoke could be generated during the DPF regeneration or carbon monoxide poisoning could result.
- Ammonia not held by the SCR catalyst could be discharged into the exhaust gas. Be careful of the potential ammonia odor when the system is excessively operated.

Handling asbestos dust

Inhaling asbestos dust can cause lung cancer. When handling the materials which may contain asbestos, take the following precautions:

- Never use compressed air for cleaning.
- Avoid brushing or grinding parts containing asbestos.
- For clean up, use a vacuum equipped with a high efficiency particulate air filter (HEPA).
- Wear the stipulated respirator if there is no other way to control the dust. When working indoors, install a ventilation system with a macromolecular filter.
- Do not allow unauthorized personnel in the work area while working.
- Follow the rules and environmental standard applicable to the work area.

Be careful not to get crushed or cut

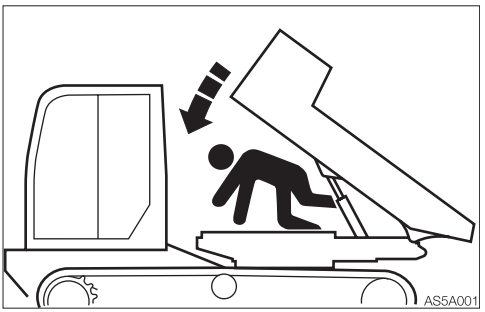

Never put your hands, feet or other parts of your body between the dump body and the machine body or between the cylinder and the dump body. The sizes of these gaps change when the dump body moves, and a person could suffer severe injury or death.

Using optional products

- Consult with Takeuchi before installing optional attachments. Depending on the type of attachments or the combination of them, the attachment may come into contact with the operator's compartment or the other parts of the machine. Make sure that the optional attachment installed is not contacted with other parts before use.
- Do not use attachments that have not been approved by Takeuchi. Doing so may compromise safety or adversely affect the machine's operation or service life.
- Takeuchi will not be held responsible for any injuries, accidents or damage to its products caused by the use by a non-approved attachment.

Never modify the machine

Unauthorized modifications to this machine can cause injury or death. Never make unauthorized modifications to any part of this machine.
If you modify or alter the configuration of the machine in a way which results in a restriction of the operator's field of vision, a new risk assessment will need to be performed. If this becomes necessary, contact your Takeuchi service or sales dealer.

PRECAUTIONS WHEN PREPARING

Know the work area

Before starting operation, know the working area condition to ensure safe operation.

- Inspect the topography and ground condition of the working area, or the structure of the building when working indoors, and take the safety precautions as necessary.

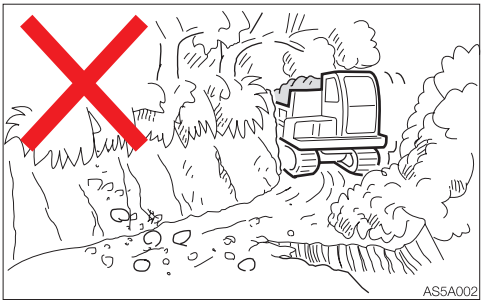

- Be sure to avoid all hazards and obstructions such as ditches, trees, cliffs, overhead electrical wires, or places where there is a danger of falling rocks or landslides.
- When working on roads, be sure to consider the safety of pedestrians and vehicles.
  - Use a flag person and/or a signal.
  - Fence off the working area and keep off unauthorized persons.
- When working in water or crossing shallow streams or creeks, check the depth of the water, the solidity of the ground and the water flow speed beforehand.
  Refer to “Cautions on operating” for further instructions.

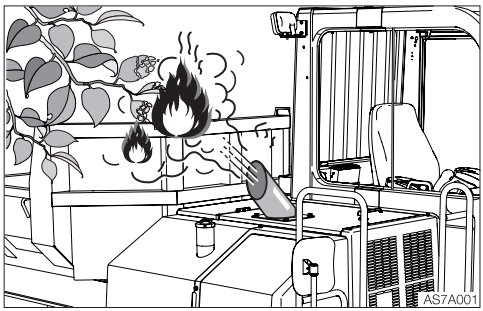

- Do not perform the DPF regeneration if the machine is surrounded by flammable items such as plants, trees, dry grass, wastepaper, oil and waste tires. There is a risk of fire due to the high-temperature exhaust gas emitted from the DPF.
  DPF: Diesel Particulate Filter
- The DPF may automatically perform the regeneration while the engine is left running. Make sure that there are no flammable items around the DPF and the exhaust line, and also that the engine hood is closed to prevent fire. Be careful not to burn yourself on the high-temperature exhaust gas.
- Do not perform the DPF regeneration in poorly-ventilated indoor spaces, as smoke could be generated during the DPF regeneration or carbon monoxide poisoning could result.

Check the strength of the bridge

When traveling over a bridge or a structure, check the permissible load. If the strength is insufficient, reinforce the bridge or the structure.

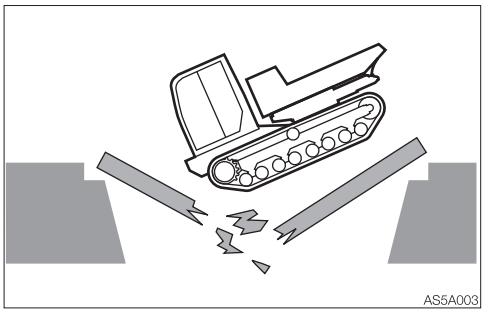

Always keep the machine clean

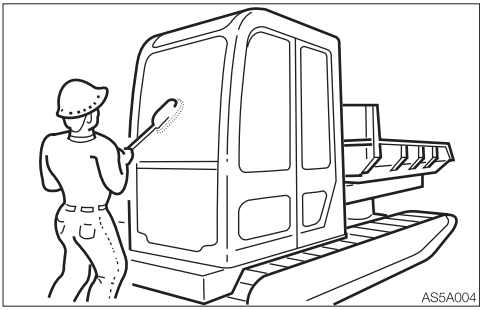

- Clean windows, mirrors and lights to ensure good visibility.
  Adjust the mirror to the best position for the operator to see the rear view (blind spot) from the operator's seat.
- Wipe off any oil, grease, mud, snow or ice, to prevent accidents due to slipping.
- Remove all loose objects and unnecessary devices from the machine.
- Remove any dirt, oil or grease from the engine area to prevent fires.
- Clean around the operator's seat and remove any unnecessary object from the machine.

Perform inspection and maintenance every day

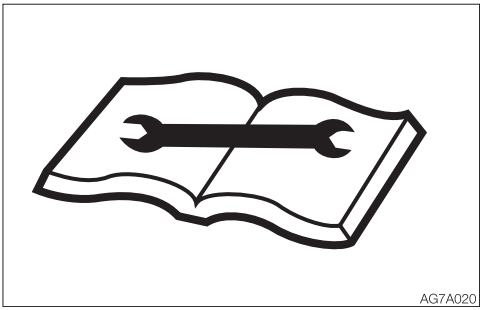

Failure to identify or repair the irregularities or damage on machine can lead to accidents.

- Before operating, perform the specified inspection and make prompt repairs where necessary.
- If a failure occurs and the operation becomes impossible or the engine fails, immediately stop the machine by following the shutdown procedure, and keep machine securely parked until the malfunction is corrected.

Cautions in the operator's compartment

- Remove mud and grease from shoe soles before entering the operator's compartment.
  Pedaling the machine with the shoes with mud and grease will cause a slip accident.
- Do not leave the parts or tools around the operator's seat.
- Do not leave any plastic bottles in the operator's compartment or attach any suction cups on the window glass. The plastic bottle or suction cup act as a lens and can cause fire.
- Do not use the mobile phone during traveling or working.
- Do not bring combustibles or explosives into the operator's compartment.
- After smoking, be sure to tightly close the lid of the ashtray to put out the match or cigarette.
- Do not leave the cigarette lighter in the operator's compartment. When the room temperature rises, the lighter may explore.

Emergency exit

Front window (excluding machines with a front guard)

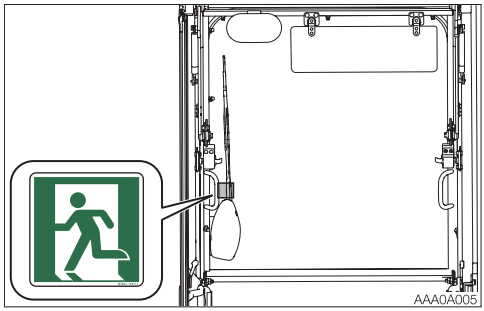

If you should become trapped inside the cab, open the front window to get out.

Emergency hammer (optional)

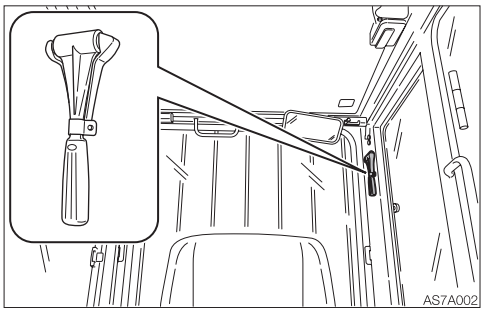

An emergency hammer is installed to be used to escape from the cab in an emergency. When escaping, break the windows with the hammer.

- When breaking the window pane with a hammer, take great care not to injure yourself with the broken glass pieces.
- Remove the glass pieces from the window sill so as not to cut yourself when evacuating. Broken glass will fall from the window, so be careful of your footing and do not slip on the glass.

PRECAUTIONS WHEN STARTING

Support your weight in a three point secure stance when getting on/off the machine

- Do not jump on or down from the machine. Never attempt to get on or off the moving machine.
- When getting on or off the cab, first fully open the door to the locked position and check that it does not move.


AG7A022

- Climb up/down the steps facing the machine and holding the handrail to support your weight in a three point secure stance (hand and feet).
- Never use the safety lock lever or control levers as hand holds.

Before starting the machine, ask any unauthorized personnel to leave the area

Do not start the engine until you are sure it is safe to start the machine by checking the following items.

- Walk around the machine and warn the person who is servicing the machine or is walking near the machine. Do not start the machine until you are certain that no one is around the machine.



AG7A023PE

- Check if there is a “DO NOT OPERATE” alert sign or similar sign is on the cab door, controls or ignition switch. If there is one, do not start the engine or touch any levers.
- Sound the horn to warn people around the machine.

Sit in the operator’s seat and start the engine

- Adjust the seat to securely latch it.

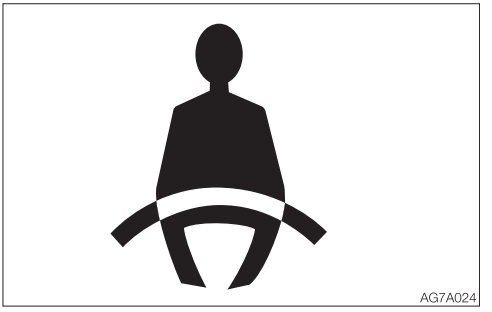
AG7A024

- Fasten the seat belt.
- Check if the parking brake is on and the control levers are in the neutral position.
- Check if the safety lock lever is in the lock position.
- Make sure that no one is near the machine.
- Start and operate the machine only from the operator’s seat.
- Never attempt to start the engine by shorting across the starter terminals.

Starting with jumper cables

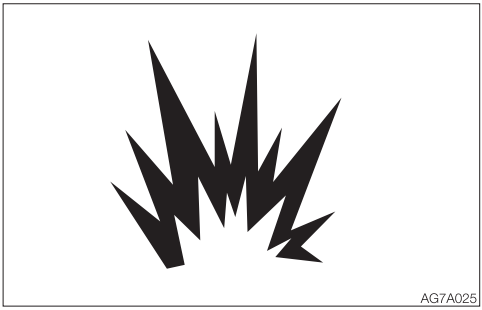

Use jumper cables only in the recommended manner. Improper use of jumper cables can result in battery explosion or unexpected machine motion.
Refer to “If the battery goes dead” for further instructions.

After starting the engine

After starting the engine, perform the operations and checks described below in a safe place with no persons or obstacles in the area. If any malfunction is found, follow the shutdown procedure and report the malfunction.

- Warm up the engine and hydraulic oil.
- Check if all gauges and warning devices are properly working.
- Check for any noises.
- Test the engine speed control.
- Operate each control to ensure they are properly working.

In cold climates

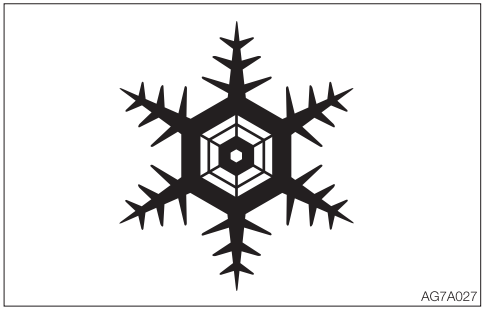

- Be careful of slippery conditions on freezing ground, steps and hand holds.
- In severe cold climates, do not touch any metal parts of the machine with bare hands. The skin will freeze to the metal, resulting in severe injury.
- Do not use ether or starting fluid on this engine. The starting fluids can cause explosion and serious injury or death.
- Warm up the engine and hydraulic oil. If the levers are operated without warming, the machine will not react or move promptly or properly, resulting in accident.

PRECAUTIONS WHEN OPERATING

Ensure good visibility

Check the field of view before operating the machine.

- When working in dark places, turn on the machine's working lights and headlights and additional lighting equipment installed, as necessary.
- When visibility is poor due to bad weather (fog, snow, rain or a cloud of dust), stop operating the machine and wait until visibility improves.
- Clean the windows, mirrors, lights and camera to ensure good visibility. Adjust the mirror and camera to the best positions so that the operator can see the rear view (blind spots) from the operator's seat.
- Unauthorized machine modifications or installation of unapproved attachments could impair the visibility. The operator's field of view must conform to ISO 5006.

Do not permit riders on the machine



Do not allow anyone to ride on any part of the machine at any time while traveling or operating.

Operate the machine only from the operator's seat

When operating any lever or switch, always do it while sitting in the operator's seat. Failure to do so may be very dangerous.

Check if the work area is safe and secure before operation

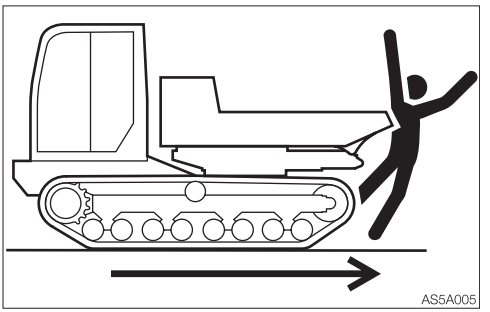

- Confirm the performance limits of the machine.
- Use a signal person at road shoulders, narrow places or where your vision is obstructed.
- Never allow anyone to enter the machine's swing radius and path.
- Signal your intention to move by sounding the horn.
- There is a blind spot in the rear of the machine. Before traveling in reverse, check that the area is safe and clear.

Precautions on traveling and turning

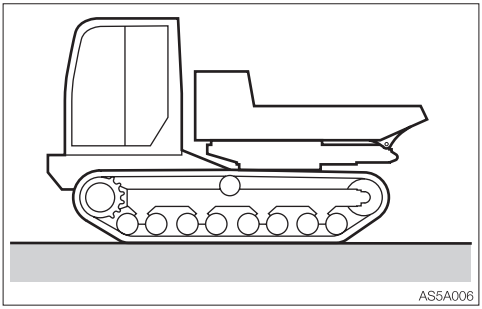
AS5A006

- Do not travel while the dump body is being swung or raised. Doing so is dangerous because it causes the machine to become unstable. Fully lower the dump body and make it parallel to the main frame.
- Avoid sudden starting, stopping and turning. Otherwise, the loaded material could be shifted to cause the machine to lose its balance, or the structures in the surrounding area could be damaged by the material fallen from the dump body.
- Do not raise the safety lock lever while traveling. Doing so is dangerous; the parking brake will be activated and the machine will stop abruptly.
- Do not switch off the ignition switch while traveling. Doing so is dangerous; the machine will stop abruptly.
- Before traveling in reverse, visually check if the rear view is clear. Failure to do so could result in contact with a worker or obstacle.
- When hauling materials or when traveling over rough terrain or slippery road surface, slow down the travel speed and drive carefully.

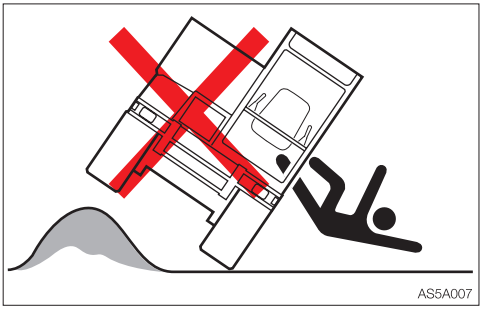
AS5A007

- Avoid crossing over obstacles whenever possible. If you must do so, try to go over the obstacle at a right angle to it at a low speed. Never cross obstacles which will tilt the machine to an angle of 10° or greater.

Precautions when traveling on slopes

When traveling on slopes, do it carefully so that the machine does not tip (roll) over or slide.

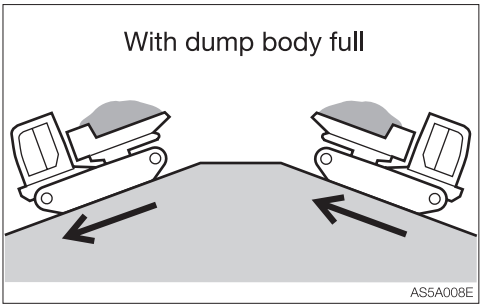

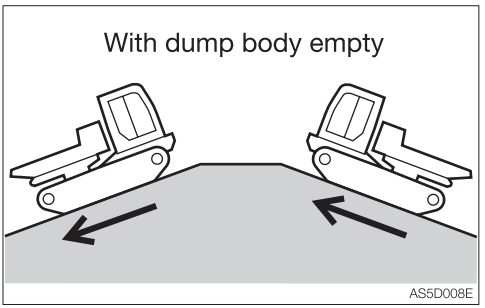

When traveling on slopes of 15 degrees or more, position the heavier end of the machine (front or back, whichever is heavier) pointing up the slope.

- Never travel on slopes that are too steep for the machine to maintain its stability. Note that in reality, the machine's performance decreases on slopes due to its poor working condition.
- When traveling on slopes or grades, drive slowly in 1st (low) speed. Especially on down slopes, slow down the engine speed and limit the stroke length of the left control lever to less than half. Going down a slope at high speed may lead to loss of control.
- Braking abruptly on slopes could result in the machine losing its balance and tipping over.

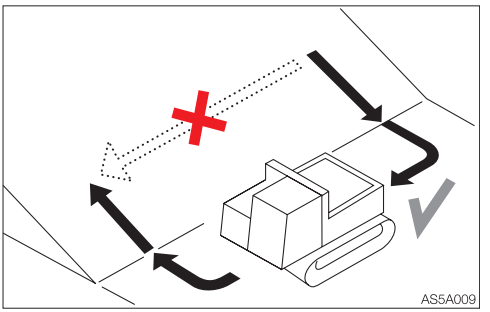

- Do not change directions on slopes or traverse slopes. First return to a flat surface, and then take an alternative path.
- The machine may slip sideways even on a slight slope if the ground is covered with grass or dead leaves, or when traveling on a wet metal plate or frozen surfaces. Make sure the machine is never positioned sideways on slopes.
- If the machine is stalled on the slope, return each control lever to the neutral position before restarting the engine.

Operate the machine on snow or ice with extra care

- When traveling on snow or on frozen surfaces, drive at a low speed and avoid starting, stopping or changing directions abruptly.
- In the snowy area, the road shoulder and objects placed beside the road are buried in the snow and cannot be seen. There is a hazard of the machine tipping over or hitting covered objects, so always carry out operations carefully.
- If the machine enters deep snow, there is a hazard that it may tip over or become buried in the snow.
  Be careful not to drive beyond the road shoulder or to get trapped in a snow drift.
- With frozen ground surfaces, the ground becomes soft when the temperature rises, and this may cause the machine to tip over, resulting in an operator trapped inside the machine.

Take care when handling unstable loads

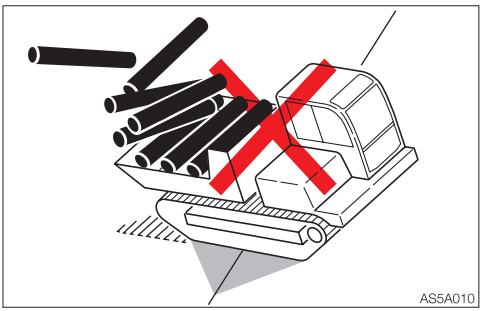

Unstable load such as round items, cylindrical items and stacked plates may fall from the dump body. When handling unstable load, be sure to secure it for hauling.

Precautions when loading material

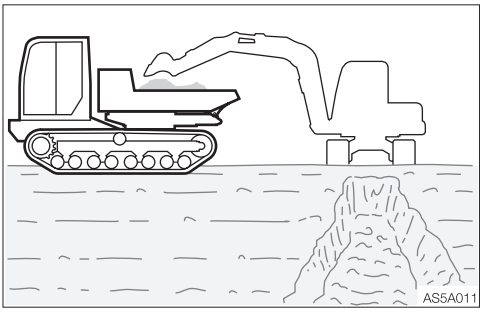

When loading earth or sand, make sure that the machine operator is safe. Do not load material on slopes. Do it only on a firm ground.
Improper loading is dangerous, as it could cause the machine to tip over or result in the load shifting.

- Do not exceed the maximum loading capacity (3700 kg, 8155 lb).
- Load the material so that it is evenly distributed in the dump body.
- Be sure to properly secure the unstable load onto the dump body.

Precautions when dumping

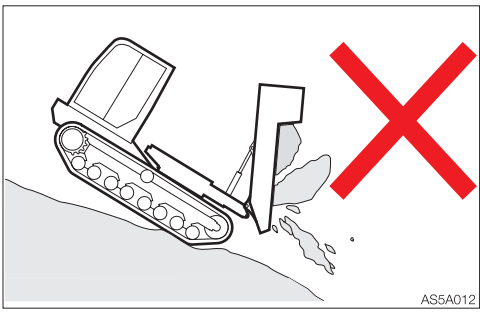

Do not perform the following dumping operations. The machine may tip over due to the shift of the center of gravity.

- Dumping on slopes or bumpy terrain
- Dumping while swing the dump body
- Dumping while traveling

Keep a safe distance from the overhead high-voltage cables

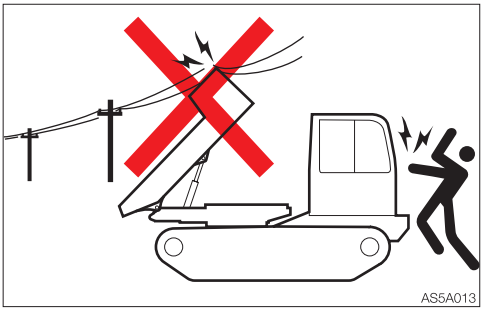

Never bring any part of the machine or loaded material to near to the high voltage cables unless all safety precautions required by the local and national authorities have been installed. If a person comes near to the machine that is discharging sparks or located near to or in contact with the power source, there is a hazard of electric shock and death.

- Always maintain a safe distance between the machine and the high-voltage electric cable.
- Check with the local power company about safe operating procedure before starting operations.
- Consider all cables to be high-voltage cables and treat all cables as energized even though it is known or believed that the power is shut off and the cables are visibly grounded.
- Use a signal person to give warning if the machine approaches too close to the high-voltage electric cables.
- Caution all personnel in the work area not to come close to the machine or the loaded material.

Watch out for hazardous working conditions

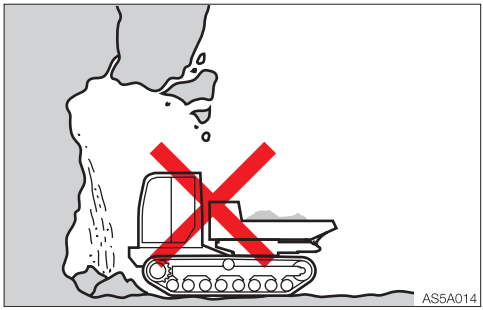

- Never operate the machine under the cliff. Doing so is dangerous as it could cause landslides.
- Do not operate in places where there is a danger of falling rocks.
- Do not come close to unstable grounds (cliffs, road shoulders, deep ditches). If the ground should collapse under the weight or vibration of the machine, there is a hazard that the machine may fall or tip over.
  - Remember that the soil after heavy rain or blasting is weak.
  - The ground of top of the embankment and of the circumferences of the excavated ditches are also weak.

Travel in narrow or crowded places

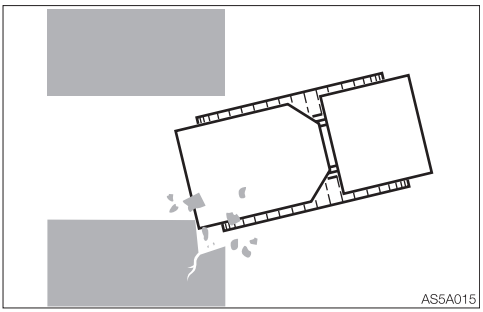

When traveling in narrow sites, crowded places or indoors, operate the machine while carefully looking around the area and maintaining the safe speed to avoid contact accidents.

Precautions when passing through tunnels or going under bridges

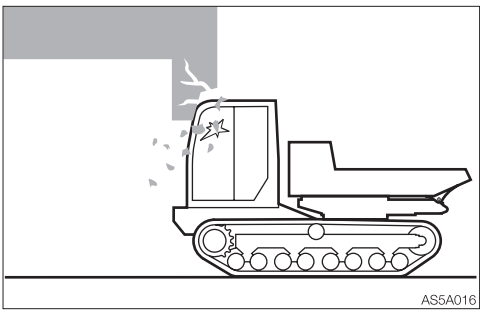

Check the height limit and width limit of tunnels and bridges beforehand to avoid the machine from contact with the ceiling or walls. If contacted, it could result in a serious accident.

Do not enter areas where there is soft ground.

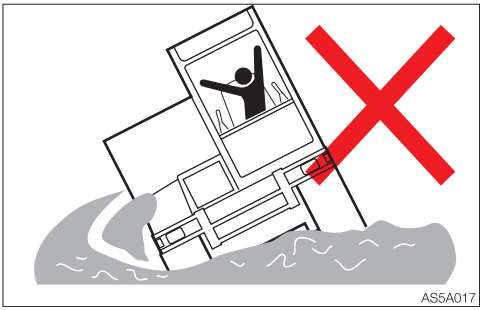

Driving on the soft ground could cause the machine to tilt under its own weight, resulting in a machine tipping over or sinking into the ground.
Do not drive on soft surface such as a back-filled ground.

Do not come close to unstable grounds

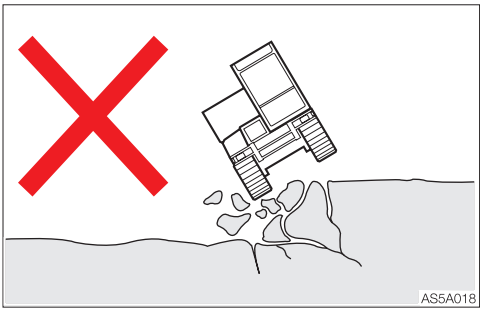

Working on unstable grounds is dangerous because the machine is likely to tip over.

- Avoid coming close to cliffs, road shoulders and ditches because they are surrounded by soft ground.
- Take care when working over the embankment/mound; the weight or the vibration of the machine could cause the embankment/mound to collapse or the machine to suddenly tilt over.
- Remember that the soil after heavy rain or blasting is weak.

Be careful with flying objects

This machine is not equipped with protective equipment to protect the operator from flying objects. Do not use this machine in places where there are risks of the operator being hit by flying objects.

Cautions when towing

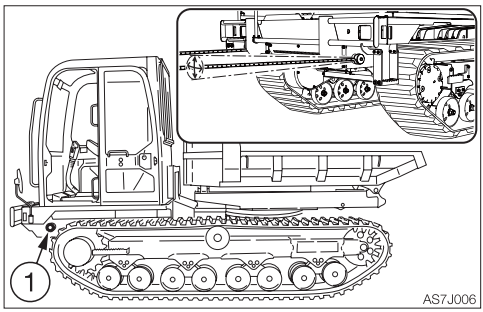

When towing, serious injury or death could result, if performed incorrectly or the wire rope being used is inappropriate or not properly inspected.

- Do not tow using only a towing hook or hole on one side.
- It becomes dangerous if the wire rope breaks or becomes disengaged. Use a wire rope appropriate for the required tractive force.
- Do not use a wire rope that is kinked, twisted or otherwise damaged.
- Do not apply heavy loads abruptly to the wire rope.
- Wear safety gloves when handling the wire rope.
- Make sure there is an operator on the machine being towed as well as on the machine that is towing.
- Never tow on slopes.
- Do not let anyone come near to the wire rope while towing.

Refer to “Towing” for further instructions.

PRECAUTIONS WHEN STOPPING

Park safely

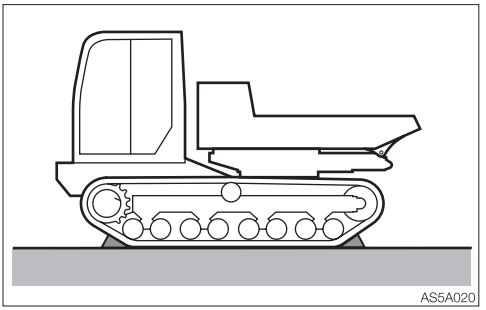

- Park the machine on a flat, rigid and safe ground. Set the parking brake.

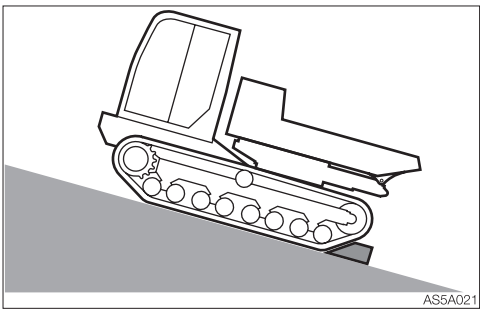

If you must park on a slope or incline, park the machine securely and block the movement of the machine.

- When parking on a street, use barriers, caution signs, lights, etc., so that the machine can easily be seen even at night to avoid collision with other vehicles.
- Before leaving the operator's seat, raise the safety lock lever to engage the lock and stop the engine.

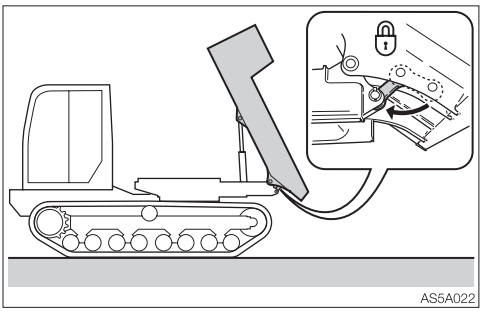

- Do not leave the machine while the dump body is being raised. If it is absolutely necessary to leave the raised dump body unattended, be sure to engage the dump body prop to prevent the dump body from dropping.

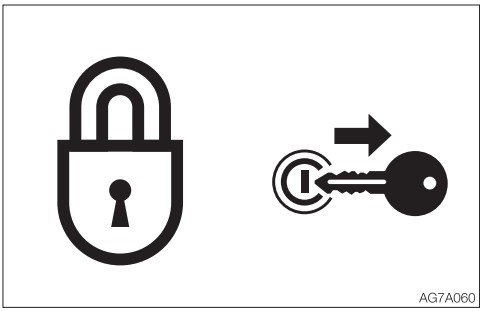

- Before leaving the machine, do the followings:
  1. Fully lower the dump body and make it parallel to the main frame.
  2. Raise the safety lock lever to the lock position.
  3. Stop the engine and remove the ignition key.
  4. Lock the cab and covers and take the key with you.

PRECAUTIONS WHEN TRANSPORTING

Load/unload the machine safely

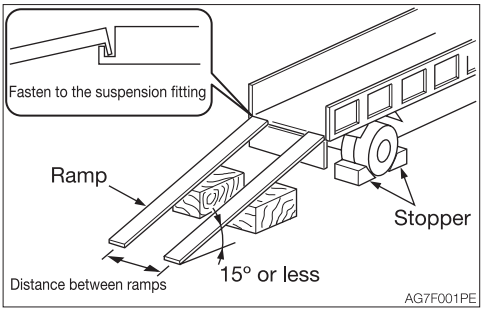

The machine may roll or tip over or fall while being loaded or unloaded. Take the following precautions:

- Select a firm, level surface and keep sufficient distance from road shoulders.
- Secure the ramps of adequate strength and size to the truck bed. The slope of the ramps must not exceed 15°. If the rumps are bowed down too low, support them with poles or blocks.
- Keep the truck bed and loading ramps clean of oil, soil, ice, snow, and other materials to prevent the machine from sliding sideways. Clean the tracks.
- Chock the transporter wheels to prevent movement.
- When being loaded or unloaded, travel slowly in 1st (low) gear by following the signal from the signal person.
- Never change courses on the ramp. If it is necessary, move down from the ramps, change the course and then get on the ramps again.
- Do not swing or raise the dump body on the ramps. The machine may tip over.
- When raising the dump body on the truck bed, do it slowly as the footing should be unstable.
- Lock the cab door after being loaded, if applicable. Otherwise, the door may open during transport.
- Chock the tracks and secure the machine to the truck bed with wire rope or chain.

Hoist the machine safely

- Know and use correct crane signals.
- Check the hoisting equipment for damaged or missing parts on a daily basis and replace as necessary.
- When hoisting, use a wire rope capable of lifting the machine mass.
- Hoist the machine in such a manner described in the procedure below. Do not do it in any other manner, as it may result in the machine losing its balance.
  Refer to “Hoisting the machine” for further instructions.
- Do not hoist the machine with an operator on it.
- When hoisting, hoist slowly so that the machine does not tip.
- Keep everyone out of the area when hoisting. Do not move the machine over the heads of the persons.

Transport the machine safely

- Know and follow the applicable safety rules, vehicle code and traffic laws when transporting the machine.
- Select the best transport route by considering the length, width, height and weight of the truck with the machine loaded on it.
- Never abruptly start or stop or run at a high speed at the sharp curves during transport. Doing so will move or lose the balance of the loaded machine.

PRECAUTIONS ON MAINTENANCE

Display a “DO NOT OPERATE” alert sign

Severe injury could result if an unauthorized person should start the engine or touch controls during inspection or maintenance.

- Before performing maintenance, stop the engine and remove the ignition key which will be kept by the maintenance personnel.



- Display a “DO NOT OPERATE” alert sign on easy-to-see locations such as the ignition switch or control levers.

Use the correct tools

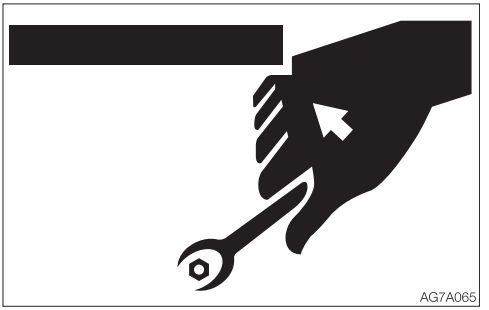

Do not use damaged or weakened tools or tools designed for other purposes. Use tools appropriate for the work involved.

Replace safety-critical parts periodically

- Replace fuel hoses periodically. Fuel hoses wear out over time, even if they do not show any symptom of wear.
- Regardless of the replacement schedule, replace immediately if a symptom of wear is found.
  Refer to “List of safety-critical parts” for further details.

Explosionproof lighting



To prevent an ignition or explosion, use explosion-proof lights when inspecting fuel, oil, coolant or battery fluid. Otherwise, explosion could result causing serious injury or death.

Prohibit access by unauthorized persons

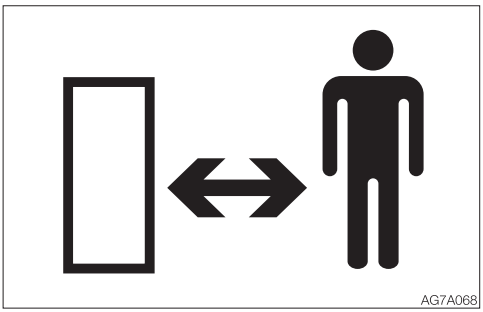

Do not allow unauthorized personnel in the work area while working. Be careful when grinding, welding or using a hammer. You could be injured by flying debris from the machine.

Prepare work area

- Select a firm, level work area. Make sure there is adequate light and, if indoors, ventilation.
- Clear obstacles and dangerous objects. Eliminate slippery areas.

Cautions on working on top of the machine



- Before performing maintenance on the top of the machine, clean the place you will work on and observe the following to prevent falling.
  - Do not spill oil or grease.
  - Do not leave tools scattered around.
  - Watch your step when walking.
- Never jump down from the machine. Use the steps and handrails when climbing up and down the machine, and always support your body at three points with your hands and feet.
- Do not stand on the track and perform maintenance work. Doing so is dangerous because of the unsteady foothold. Use the work bench.

Always keep the machine clean

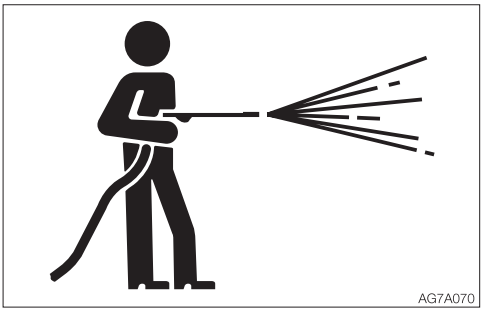

- Clean the machine before performing maintenance.
- Stop the engine before washing the machine. Cover the electrical parts so that water cannot enter. Water on electrical parts could cause short-circuits or malfunctions. Do not use water or steam to wash the battery, electronic control components, sensors, connectors or the operator's compartment.

Stop the engine before performing maintenance

- Avoid lubrication or mechanical adjustments while the machine is moving or while the engine is running when the machine is not moving.
- If maintenance must be performed with the engine running, always work as a two person team communicating each other.
  - One person must sit in the operator's seat so that he/she can immediately stop the engine when necessary. He/she must take care not to touch the lever or pedal unless necessary.
  - The one who performs maintenance must make sure to keep his/her body or clothing away from the moving part of the machine.

Stay clear of the moving parts

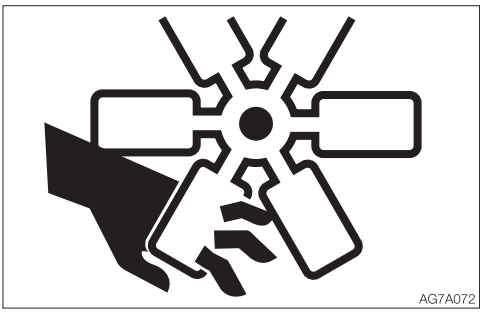
AG7A072

- Stay clear of all rotating and moving parts. If a hand or tool becomes trapped in the rotating or moving part, serious injury or death could result.
- If a tool or other objects is dropped or inserted in the fan or fan belt, it will be flown or cut in pieces. Do not drop or insert anything in the fan or fan belt.

Firmly secure the machine or any component that may fall


AG7A073

- Before performing maintenance or repairs under the machine, lower the dump body completely.
- Chock the tracks.
- If you must work under the raised machine or its components, always use the dump body prop, wood blocks, jack-stands or other rigid and stable supports to keep the machine or its components raised. Never get under the machine or its components if they are not sufficiently supported. This procedure is especially important when working on hydraulic cylinders.
- The support device provided on the machine is designed assuming that there is no load. Remove the load before using the support device.

Precautions when raising the dump body

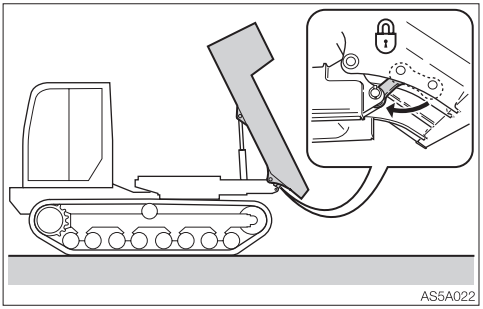

- If you must work under the raised dump body, be sure to engage the dump body prop to prevent the dump body from dropping. Never position yourself under the dump body without making sure that it is securely supported.
- Disconnecting or loosening any faulty hydraulic line, hose, fitting or component could cause the dump body to fall.
- Repair or replace the dump body prop if it is damaged or any part is missing. Failure to do so may cause the dump body to fall, resulting in a serious injury or death.

Secure the engine hood or covers when opened.

Be sure to secure the engine hood or covers when they are left open. Do not leave the engine hood or cover open on a windy day or if the machine is parked on a slope.

Place heavy objects in a stable position

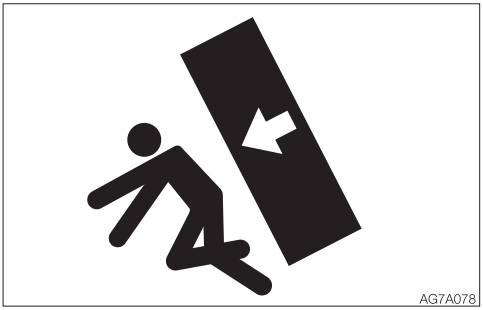

When it is necessary to temporally place a heavy machine part or an attachment on the ground during removal or installation, be sure to place it in a stable position. Keep unauthorized persons from the storage place for such object.

Cautions when refueling



- Do not smoke or permit open flames while fueling or near fueling operations.
- Never remove the fuel cap or add fuel when the engine is running or still hot. Do not spill fuel on the hot surface of the machine.
- Fill the fuel tank in a well ventilated place.
- Do not fill the fuel tank to capacity. Allow room for oil expansion.
- Clean up spilled fuel immediately.
- Securely tighten the fuel filler cap. If the fuel cap is lost, replace it only with the genuine cap. Use of a non-approved cap without proper venting may result in pressurization of the tank.
- Never use fuel for cleaning.
- Use the correct grade of fuel for the operating season.

Handling of hoses

Oil leak or fuel leak can cause a fire.

- Do not twist, bend or hit the hoses.
- Never use twisted, bent or cracked pipes, tubes or hoses; otherwise, they may burst.
- Retighten loose connection.

Be careful with hot and pressurized components

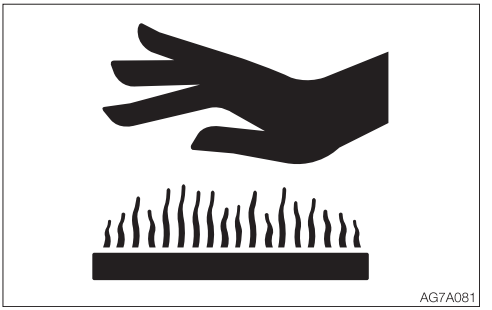

Stop the engine and allow the machine to cool down before performing maintenance.

- The engine, muffler, radiator, hydraulic lines, sliding parts and many other parts of the machine are hot immediately after the engine is stopped. Touching these parts will cause burns.
- The engine coolant, hydraulic oil and other oils are also hot and under high pressure. Be careful not to touch the hydraulic oil when loosening the cap or plug. Working on the machine under these conditions could result in burns or injuries due to the hot oil spurting out.

Be careful with hot cooling systems

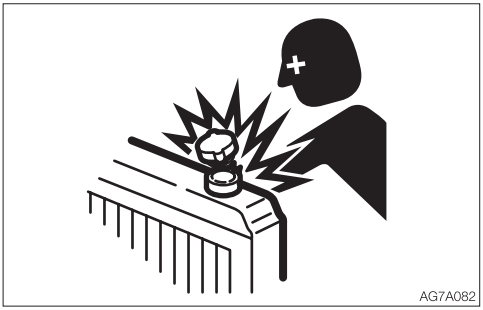

Do not remove the radiator cap or the drain plug when the cooling water is hot. Stop the engine and wait until the engine and the cooling water cool. Then, slowly loosen the radiator cap to release the internal pressure and remove it.

Be careful with oil internal pressure

Pressure is maintained in the hydraulic circuit long after the engine has been shut down.

- Completely relieve the internal pressure before performing maintenance work.

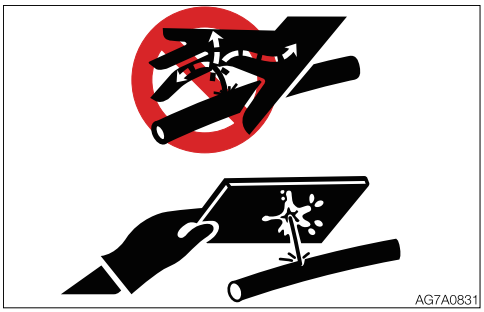

- The hydraulic oil is high enough pressure to penetrate the skin or eyes and cause serious injury, blindness or death. Remember that the hydraulic oil escaping from a small hole is almost invisible. When checking for leaks, wear protective goggle and thick gloves, and use a paperboard or plywood to keep your skin from oil spurting.
  If oil penetrates the skin, it must be surgically removed within a few hours by a doctor familiar with this type of injury.

Release pressure before working on the hydraulic system

Oil may spurt out if caps or filters are removed or pipes are disconnected before releasing the pressure in the hydraulic system.

- When removing plugs or screws, or when disconnecting hoses, stand to the side and loosen them slowly to gradually release the internal pressure before removing.
- Oil or plug may spurt out according to the pressure in the travel motor case. Loosen the plug slowly and release the internal pressure.

Be careful with debris when the hammer is being used

When using a hammer, pins may fly out or metal particles may be scattered. This may lead to serious injury.

- If hard metal parts such as pins and bearings are hit with a hammer, wear protective gear such as safety goggles and gloves.
- When hitting pins, always check that there is no one in the surrounding area.

Cautions when servicing the air conditioner

If the refrigerant comes in contact with eyes, it damages your eyesight. If the refrigerant comes in contact with skin, it may cause frostbite. Never touch the refrigerant.

Disconnect the battery wiring



- Disconnect the battery wiring before working on the electrical system or doing electric welding. Disconnect the negative (–) battery cable first. When reconnecting, connect the negative (–) battery cable last.
- The SCR system operates for up to 10 minutes after the ignition switch is turned to the OFF position.
  When removing the batteries or electrical connectors for inspection or maintenance, wait for at least 10 minutes after the ignition switch is turned to the OFF position. Otherwise, the system could fail.

Use caution when handling batteries

- Do not allow persons (such as children) to come into contact with the product unless they fully understand the handling methods and risks.
- Batteries contain sulfuric acid which will damage the eyes or skin in case of contact.
  - If eye contact occurs, flush immediately with clean water and get prompt medical attention.
  - If accidentally swallowed, drink large quantities of water or milk and call a physician immediately.
  - If acid contacts skin or clothing, wash off immediately with a lot of water.
- Wear protective goggle and gloves when working with batteries.
- Batteries generate flammable hydrogen gas which may explode. Keep away from flame, sparks, fire or lighted cigarettes.
- When checking the level of the battery fluid, use a flashlight.
- Be sure to stop the engine by turning off the ignition switch before inspecting or handling the battery.
- Be careful not to let metal tools or any metal objects come into contact with the battery terminals and cause a short circuit.
- Loose battery terminals may result in sparks. Be sure to fasten terminals tightly.
- Make sure the battery caps are tightened securely.
- Do not charge a battery or jump-start the engine if the battery is frozen; otherwise it may explode. Warm the frozen battery to 15°C (60°F) before use.
- Do not use the battery when the fluid level is below the lower level limit. Doing so will hasten the deterioration of the internal portions of the battery and shorten the battery life. It also can cause rupturing (explosion).
- Do not add the distilled water above the upper level limit. Doing so could cause the fluid to leak. This fluid can cause skin damage if contacted, or can cause the machine components to corrode.
- Use a dampened cloth to clean around the fluid level line and check the fluid level. Do not clean with a dry cloth; otherwise it could cause static electricity to build up, resulting in ignition or explosion.

Precautions for handling DEF/AdBlue®

DEF/AdBlue® is a colorless, transparent, odorless and non-hazardous aqueous solution (32.5% urea, 67.5% water, freezes at –11°C), and is harmless to the human body. In very rare cases, however, inflammation could occur in some people, and proper actions should be taken as follows.

- If skin contact occurs, flush with water. If there are changes in the skin condition or if there is pain, immediately seek medical attention.
- If accidentally swallowed, drink one or two glasses of water or milk and immediately seek medical attention.
- If eye contact occurs, immediately flush with a large amount of clean water and seek medical attention.
- Although DEF/AdBlue® itself is a noninflammable liquid, a pungent odor may be produced if heated in a fire. In case of fire, immediately evacuate the area and go to a safe place.
- Do not use expired DEF/AdBlue® solution (including solution left in the tank) stored for a long period. Doing so could cause ammonia slip, degraded NOx conversion efficiency or device damage.
- When handling DEF/AdBlue®, do not use anything such as cotton work gloves whose fibers could get into the solution. Doing so could cause clogging of the DEF/AdBlue® filter or urea deposit at the DM injection port.

Periodically replace the safety-critical parts

- To use the machine safely for a longer period, periodically add oil and perform inspection and maintenance. To improving the safely, replace the safety-critical parts like hoses and seat belts periodically. Refer to “Safety-critical parts to be replaced periodically” for further details.
- The “Safety-critical parts to be replaced periodically” are the parts which deteriorate, wear and fatigue after repeated use and whose properties change over time. While these characters of these parts could cause serious physical or personal damage, judging the remaining life of these part are difficult from external inspection or the feeling when operating.
- Replace the “Safety-critical parts to be replaced periodically” if any defect is found from external inspection, even when they have not reached the time specified interval.

Jump starting with booster cables

- When starting the engine using the booster cables, be sure to connect the cables in the proper order described below. Wrongly connected cables can result in sparking and battery explosion.
  - Do not allow the “machine in trouble” and “rescue machine” to touch each other.
  - Do not allow the positive (+) and negative (–) clips of the booster cables to touch each other or to come in contact with the machine.
  - When connecting, attach the positive booster cable to the positive (+) terminals first. When disconnecting, remove the negative cable from the negative (–) terminal (ground) first.
  - Be sure to connect the clips securely.
  - Connect the last clip of the booster cable to a point as far away from the battery as possible.
- Always wear the protective goggle and gloves when starting the engine by using the booster cables.
- Use the booster cables and clips of a size suited to the capacity of battery. Do not use damaged or corroded booster cables and clips.
- Be sure that the battery of the “rescue machine” has the same capacity as the battery of the “machine in trouble”.

Have a Takeuchi service agent repair welding

If welding must be performed, make sure that it is done by a qualified person in a properly equipped workplace. To prevent any part from breaking down or being damaged due to overcurrent or sparks, observe the following.

- Disconnect the wiring from the battery before doing electric welding.
- Do not continuously apply 200 V or more.
- The earth ground must be connected within one meter from the welding section. Do not connect the earth ground near to an electronically controlled device/ instrument or connectors.
- Make sure that there are no seals or bearings between the welding section and the earth ground.
- Do not connect the earth ground around the pins in the dump body or hydraulic cylinders.
- When welding is to be done on the machine body, disconnect the connectors for the electronically controlled devices before working.

Vibrations operators are subject to

According to the results of the tests conducted to determine the vibrations transmitted to the operator by the machine, the upper limbs are subjected to vibrations lower than 2.5 m/s^2(8.2 ft/s^2) while the seated part of the body is subjected to vibrations lower than 0.5 m/s^2 (1.64 ft/s^2).

Checks after maintenance

- Gradually increase the engine speed from a low idle to maximum speed and check that there is no oil or water leaking from the serviced parts.
- Operate each control lever and check that the machine is operating properly.

Disposing of wastes



- Always collect oil that is drained from the machine in containers. Improperly disposed waste oil can cause environmental harm.
- Follow appropriate laws and regulations when disposing of harmful objects such as oil, fuel, coolant, solvent, DEF/AdBlue®, filters and batteries.
- When disposing of a machine that is no longer usable, dispose of it in accordance with the latest national and local regulations applicable at the time.

Handling of poisonous chemicals

Poisonous chemicals will cause serious injury if directly contacted.
Poisonous chemistry used in this machine includes grease, battery solution, coolant, DEF/AdBlue®, paint and adhesive agent.
Handle the poisonous chemicals properly with care.

SAFETY SIGNS (DECALS)

For the safety of the operator and the personnel working around the site, safety signs (decals) are placed at certain locations on the machine as shown below. Walk around the machine with this manual, and check the content and location of these safety signs. Review these signs and the operating instructions in this manual with your machine operators.

- Keep the signs clean and legible. If any of the safety labels is peeling or damaged and becomes difficult to read, replace it with a new one. Please include your product serial number when ordering a new sign from the Takeuchi service agent.
- When a part/unit to which a safety sign is attached is replenished, a new sign must be attached to the new part/unit.

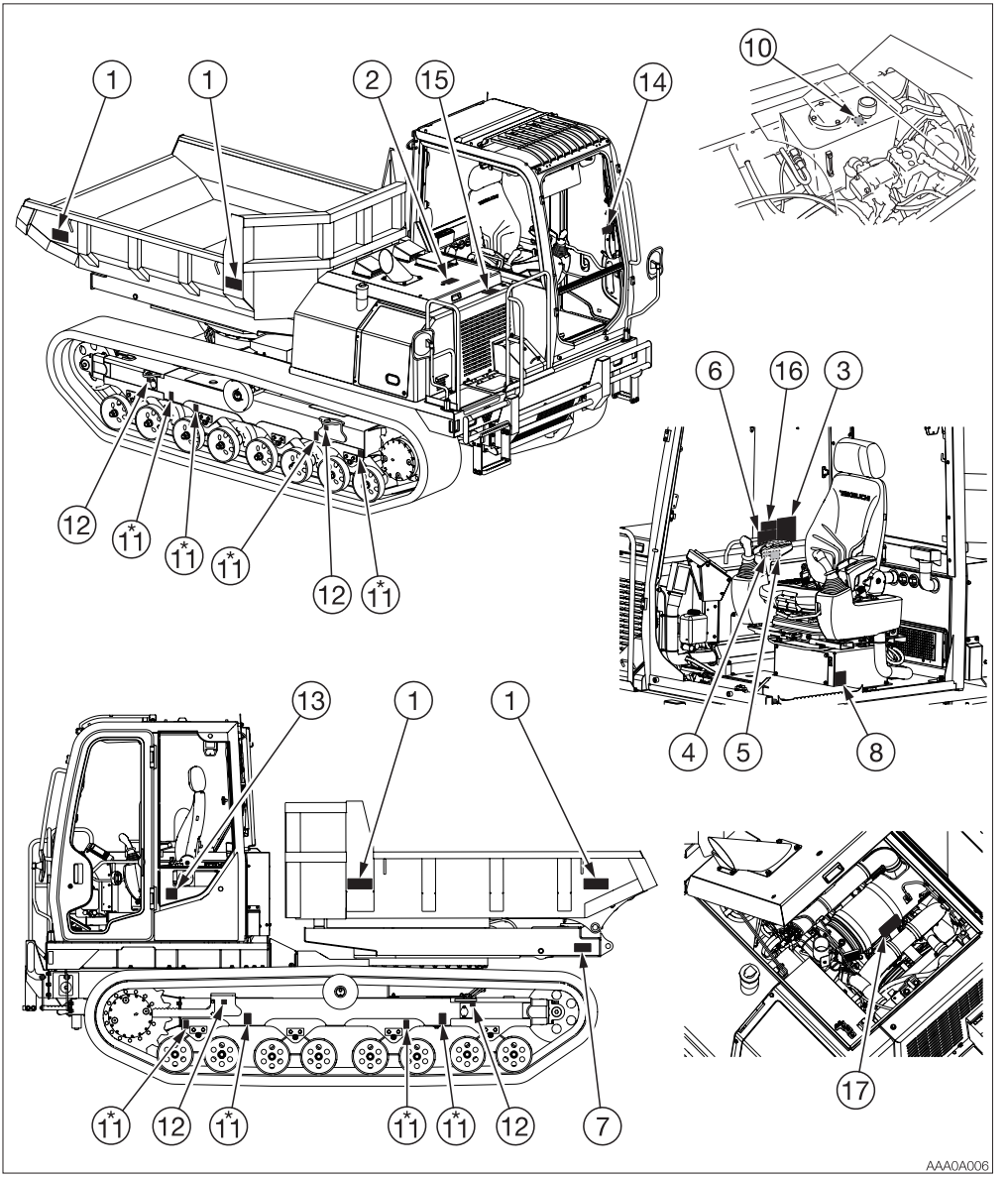
1
1
2
15
14
10
6
16
3
12
*11
*11
*11
12
*11
4
5
8
13
1
1
*11
12
*11
*11
*11
12
7
17
AAA0A006

* : If equipped

1. No.05793-00011
Safety Distance
Do not get near or stand within the machine working area.

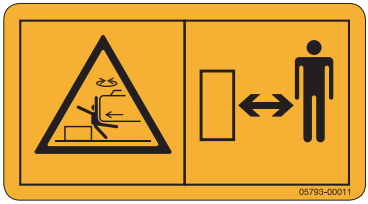

2. No.03793-66006
Hazard of rotating parts.
Turn off before inspection and maintenance.



4. No.08710-80515



5. No.08710-83006



7. No.08740-30104

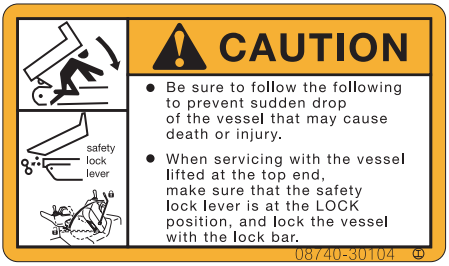

3. No.08740-30107

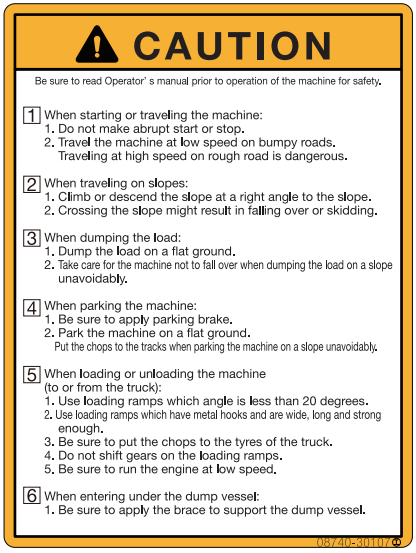

6. No.08740-30101

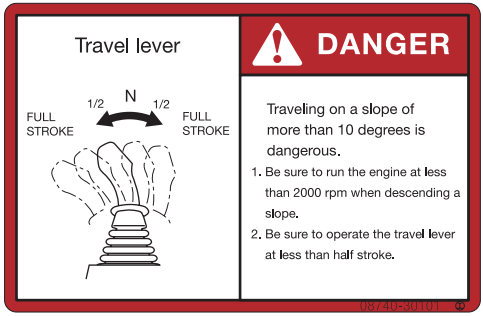

8. No.03993-00400
Position of Fire extinguisher

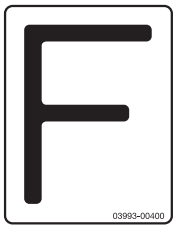

AAA0A007EN

9. No.03593-06600
Diesel Fuel



10. No.03593-06700
Hydraulic oil



11. No.03993-00500
Position of Hoisting



12. No.08810-31549
Tie down point



13. No.05793-00035
Noise Outside the Cab (If equipped)
This value indicates the noise level outside the machine and refers to the noise perceived by the persons who are in the vicinity of the work area.



14. No.03993-00052
Position of Emergency Exit



15. No.08820-31135



Sign indicates a burn hazard from spurting hot water or oil if radiator or hydraulic tank is uncapped while hot.
Allow radiator or hydraulic tank to cool before removing cap.

16. No.05693-00090

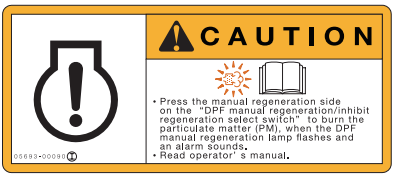

17. No.07193-00023



Sign indicates a burn hazard from touching heated parts, such as engine, pump, or muffler during or right after operation.
Never touch when hot.

AAA0A008EN

CONTROLS



NAMES OF COMPONENTS

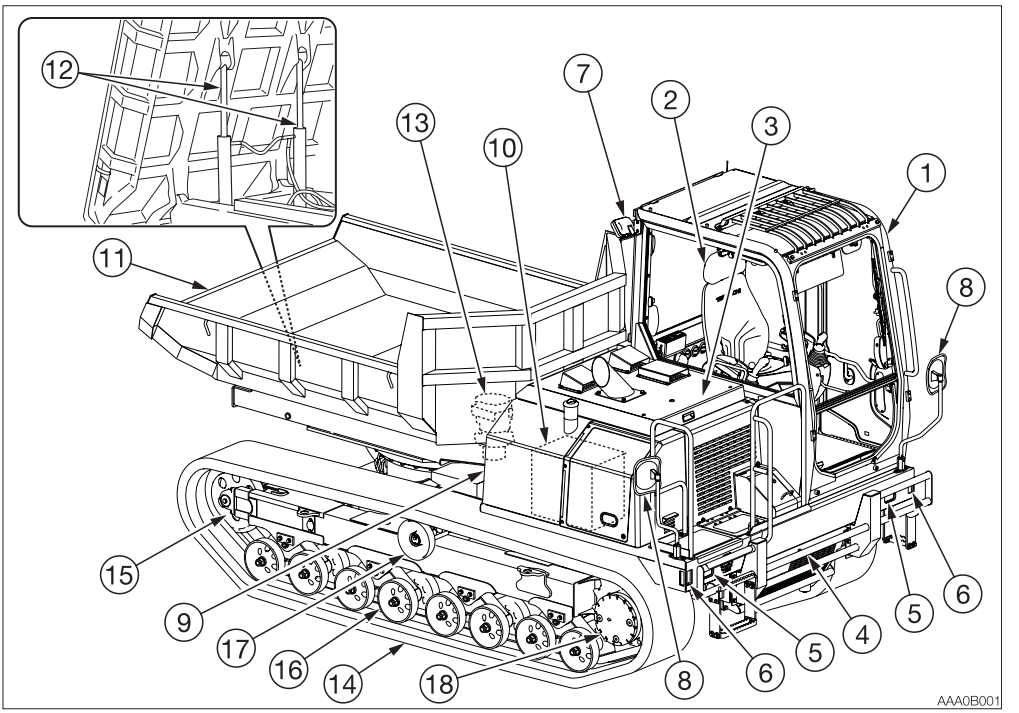

1. Cab
2. Seat
3. Engine hood
4. Bumper
5. Front light
6. Turn signal light
7. Rear light*
8. Rear view mirror
9. Fuel tank
10. Hydraulic oil tank
11. Dump body
12. Dump cylinder
13. Swing motor
14. Rubber track
15. Idler
16. Track roller
17. Carrier roller
18. Travel motor

*: Subject to the specifications or optional products selected

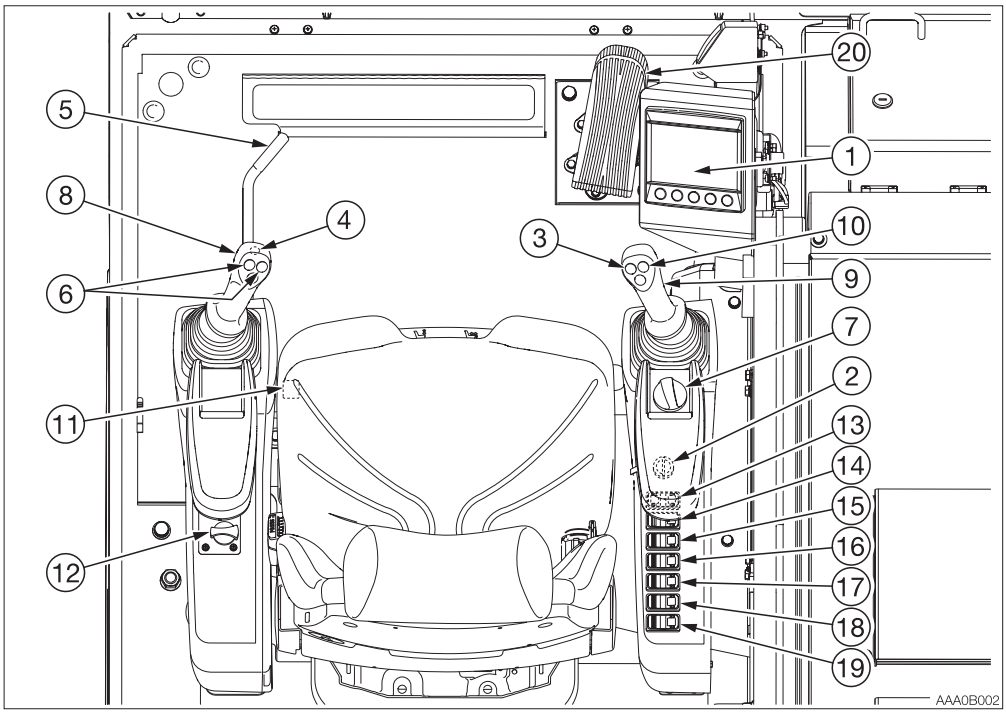

1. Multi-information display
2. Ignition switch
3. Horn button
4. Travel speed button
5. Safety lock lever
6. Turn signal buttons
7. Throttle controller
8. Left control lever
9. Right control lever
10. Deceleration button
11. Engine shutdown switch
12. Air conditioner control panel*/Heater control panel*
13. DPF manual regeneration/inhibit select switch
14. Parking brake switch
15. Working light switch
16. Front wiper switch
17. Washer switch
18. Beacon lamp switch*
19. Rear wiper/Washer switch
20. Throttle pedal

*: Subject to the specifications or optional products selected

COVERS

IGNITION KEY

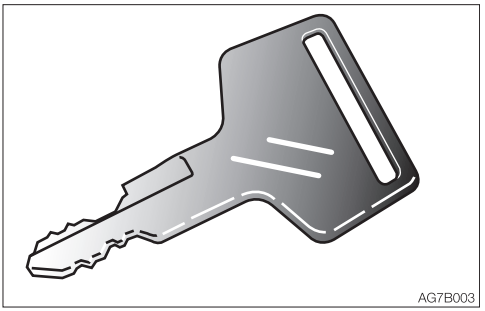

The ignition key is used to start and stop the engine, as well as to lock and unlock the following components:

- Fuel filler cap
- Cab door
- Engine hood
- Covers

FUEL FILLER PORT

⚠ WARNING

- **Do not smoke and keep away from heat or flame while filling the fuel tank.**
- **Fill the fuel tank in a well ventilated place, with the engine turned off.**
- **Clean up spilled fuel immediately.**
- **Do not fill the fuel tank to capacity. Allow room for oil expansion.**
- **Securely tighten the fuel filler cap.**

Opening

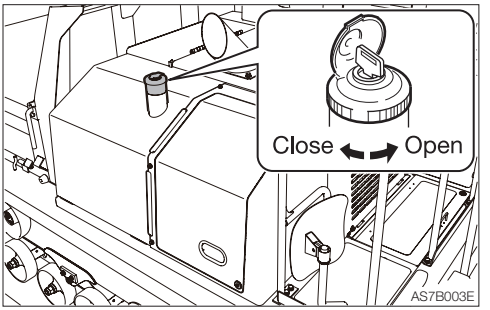

1. Open the cover, insert the key and turn it counterclockwise to unlock the cap.
2. Turn the fuel filler cap counterclockwise and remove it.

Closing

1. Install the fuel filler cap to the fuel filler port, and then turn the cap clockwise to close it.
2. Lock the fuel filler cap.

Fuel filler cap (if equipped)

This fuel filler cap complies with the UN ECE Regulation No. 34 and is equipped with a fuel leak prevention mechanism.

Opening

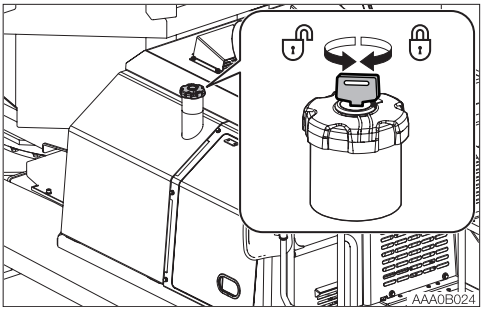

1. Insert the key and turn it 90 degrees counterclockwise to release the lock.
2. Remove the fuel filler cap.

Closing

1. Install the fuel filler cap on the fuel filler port.
2. Turn the key 90 degrees clockwise to engage the lock.

DEF/ADBLUE® REFILL PORT

⚠ WARNING

- When removing the cap from the DEF/AdBlue® tank, take care not to inhale steam.
- Do not put anything else other than DEF/AdBlue® solution in the DEF/AdBlue® tank. Putting liquids, particularly light oil or gasoline, in the tank could cause a fire or damage the SCR system. If this is accidentally done, contact a Takeuchi service dealer.

⚠ CAUTION

- DEF/AdBlue® is a colorless, transparent, odorless and non-hazardous aqueous solution (32.5% urea, 67.5% water, freezes at –11°C), and is harmless to the human body. In very rare cases, however, inflammation could occur in some people, and thus proper actions should be taken as follows.
- If skin contact occurs, flush with water. If there are changes in the skin condition or if there is pain, immediately seek medical attention.
- If accidentally swallowed, drink one or two glasses of water or milk and immediately seek medical attention.
- If eye contact occurs, immediately flush with a large amount of clean water and seek medical attention.

IMPORTANT

- Do not use expired DEF/AdBlue® solution (including solution left in the tank) stored for a long period. Doing so could cause ammonia slip, degraded NOx conversion efficiency or device damage.
- When handling DEF/AdBlue®, do not use anything such as cotton work gloves whose fibers could get into the solution. Doing so could cause clogging of the DEF/AdBlue® filter or urea deposit at the DM injection port.

Opening

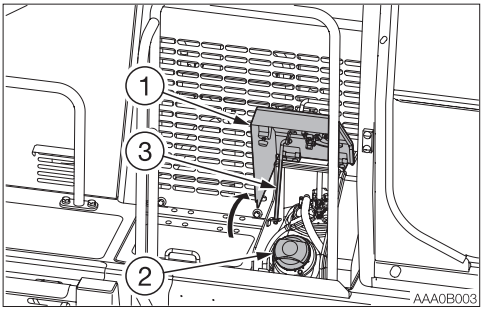

1. Insert the ignition key and turn it counterclockwise to unlock the DEF/AdBlue® tank cover (1).
2. Open the DEF/AdBlue® tank cover (1) until it stops.
3. Lower the stay (3) while supporting the DEF/AdBlue® tank cover, and then insert the stay (3) into the stay holder to secure the DEF/AdBlue® tank cover.
4. Turn the DEF/AdBlue® tank cap (2) counterclockwise and remove it.

Closing

1. Install the DEF/AdBlue® tank cap (2) on the refill port, and then turn the cap clockwise to close.
2. Support the DEF/AdBlue® tank cover (1) by hand, and then release the stay (3) to return it to the original position.
3. Close the DEF/AdBlue® tank cover (1) and press it down until a click is heard.
4. Insert the ignition key and turn it clockwise to lock the DEF/AdBlue® tank cover (1).

ENGINE HOOD

⚠ WARNING

- **Before opening the engine hood, be sure to stop the engine. If a hand or tool becomes trapped in the rotating or moving part, serious injury could result.**
- **Be sure to secure the engine hood before working under the engine hood. Do not leave the engine hood or cover open on a windy day or if the machine is parked on a slope.**
- **When opening or closing the engine hood, be careful not to get your hands or other parts of your body caught by it.**
- **Before performing maintenance on the top of the machine, clean the place you will work on and observe the following to prevent falling.**
  - **Do not spill oil or grease.**
  - **Do not leave tools scattered around.**
  - **Watch your step when walking.**
- **Never jump down from the machine. Use the steps and handrails when climbing up and down the machine, and always support your body at three points with your hands and feet.**

Opening

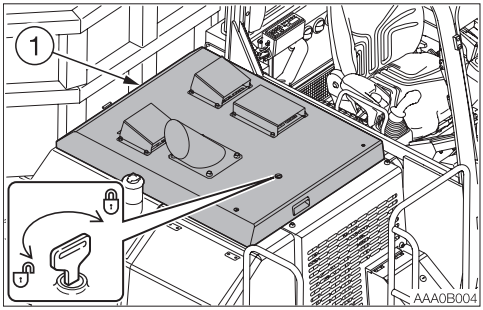

1. Insert the ignition key and turn it counterclockwise to unlock the engine hood (1).
2. Open the engine hood (1) until it stops.

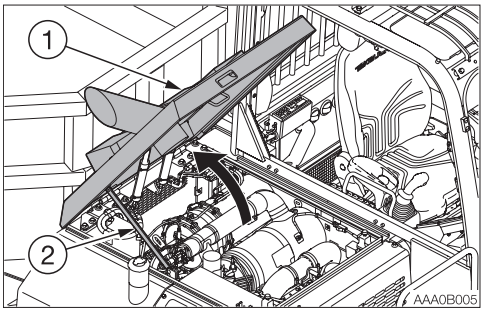

3. Raise the stay (2) and insert it into the stay holder to support the engine hood (1).

Closing

1. Support the engine hood (1) by hand, and then release the stay (2) to return it to the original position.
2. Close the engine hood (1) and press down the edge of it until a click is heard.
3. Insert the ignition key and turn it clockwise to lock the engine hood (1).

SIDE COVER (TOOL BOX)

⚠ CAUTION

- **When opening the side cover, open it all the way to the position where it is securely stopped.**
- **When opening or closing the side cover, be careful not to get your hands or other parts of your body caught by the cover.**

The grease gun and the tools are stored under the cover.

Opening

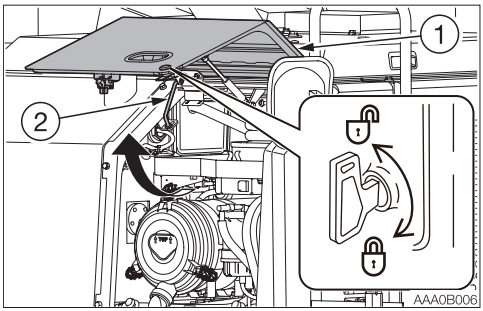

1. Insert the ignition key and turn it counterclockwise to unlock the side cover (1).
2. Open the side cover (1) until it stops.
3. Lower the stay (2) and insert it into the stay holder to support the side cover.

Closing

1. Support the side cover (1) by hand, and then release the stay (2) to return it to the original position.
2. Close the side cover (1).
3. Insert the ignition key and turn it clockwise to lock the side cover (1).

BATTERY COVER

⚠ CAUTION

- **When opening the battery cover, open it all the way to the position where it is securely stopped.**
- **When opening or closing the battery cover, be careful not to get your hands or other parts of your body caught by the cover.**

Perform the maintenance of the battery and the fusible links.

Opening

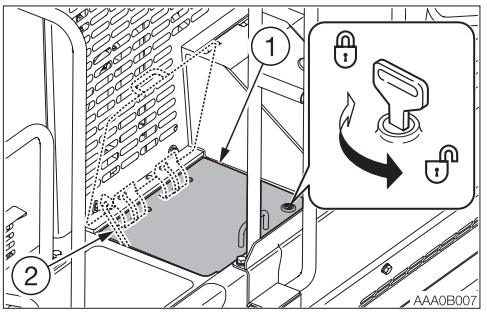

1. Insert the ignition key and turn it counterclockwise to unlock the battery cover (1).
2. Open the battery cover (1) until it stops.

Closing

1. Support the battery cover (1) by hand, and then release the stay (2).
2. Close the battery cover (1).
3. Insert the ignition key and turn it clockwise to lock the battery cover (1).

DUMP BODY PROP

⚠ WARNING

If you must work under the raised dump body, be sure to engage the dump body prop to prevent the dump body from dropping. Never position yourself under the dump body without making sure that it is securely supported.

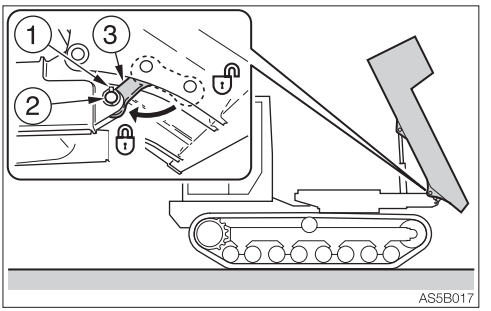

Engaging the dump body prop

1. Fully raise the dump body.
2. Raise the safety lock lever to the lock position and stop the engine.
3. Pull up the ring and disengage the lock pin (1), and then remove the pin (2).
4. Pull the disconnected end of the prop (3) toward the lock hole, and then insert the pin (2) into the lock hole.
5. Attach the lock pin (1) and push down the ring.

Disengaging the dump body prop

1. Move the right control lever to raise the dump body.
2. Disengage the dump body prop (3) and put it back in place.

CAB

CAB DOOR

⚠ WARNING

When getting on or off the cab, first open the door all the way until it is secured in the catch and check that it does not move.

Open the door fully and press it against the catch at the back of the door to secure it in place.
The door must be locked when getting on or off the machine and while in operation.

Locking and unlocking

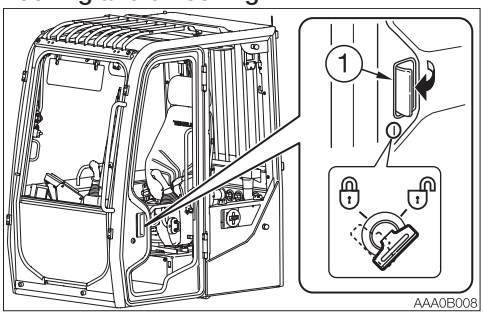

Insert the ignition key and turn it.

Opening

1. Pull the knob (1) towards you and open the door.

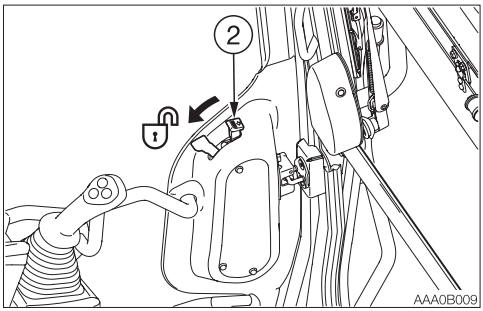

To open the door from inside the cab, pull the lever (2) toward you.

2. Open the door fully and press it against the cab to secure it in place.

Closing

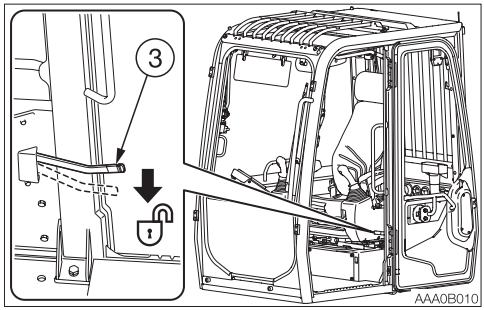

1. Push the release lever (3) downward.
2. Close the released door.

EMERGENCY EXIT

Front window (excluding machines with a front guard)

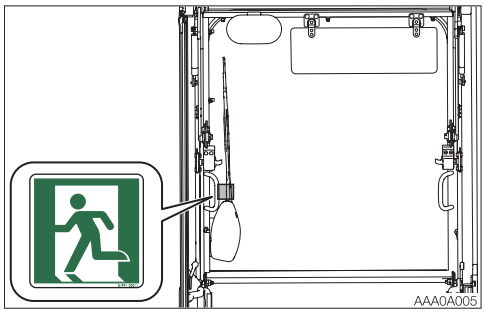

If you should become trapped inside the cab, open the front window to get out.

FRONT WINDOW

⚠ WARNING

- **Grasp the handles firmly with both hands when opening and closing the front window. Your head or hands may get caught if it slips from your hands.**
- **When the front window is opened or closed, it will come close to the head. Be careful that the window does not strike the head.**
- **When you open the front window, be sure to lock it in place with the lock pins on the left and right sides. The window may fall if it is not locked in place.**

Opening

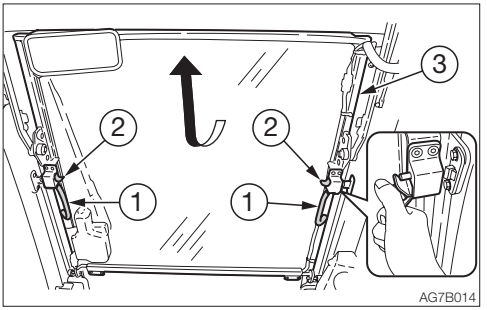

1. Park on a level surface and stop the engine.
2. Set the safety lock lever to the locked position.
3. Grasp the left and right handles (1) and press the knobs (2) with your thumb to release the lock.
4. Pull the front window (3) toward you and lift while doing so.

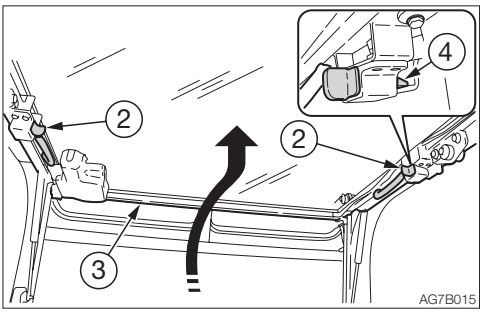

5. Release your thumb from the knobs (2) and then lift the front window (3) fully and lock the front window with lock pin (4).

Closing

⚠ WARNING

When closing the front window slowly so as not to hit your head. Lowering the window abruptly may result injury or damage the front window.

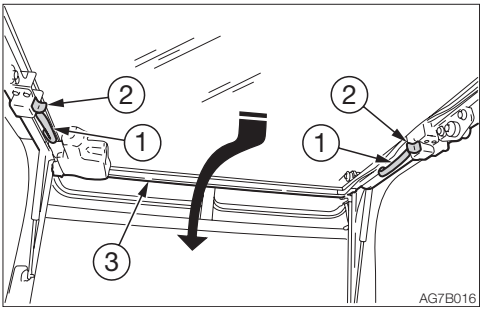

1. Grasp the left and right handles (1) and press the knobs (2) with your thumb to release the lock.
2. Pull down the front window (3) and while doing so, slide it to the front and slowly lower it.

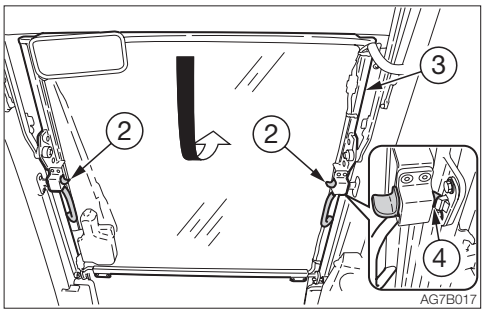

3. Release your thumb from the knobs (2) and then press the front window toward front and lock the front window with lock pin (4).

LOWER FRONT WINDOW

Removing

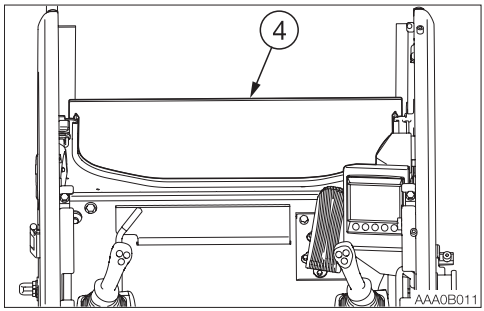

1. Open the front window and stow it in the ceiling.
2. Slowly lift the lower front window (4).

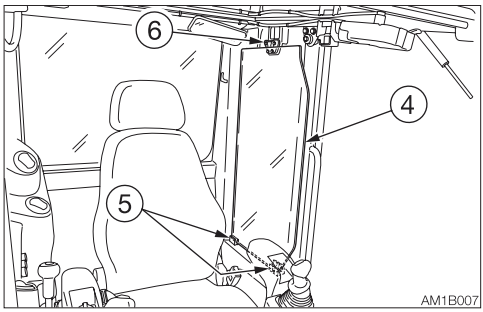

3. Hold the window in a vertical position (the bottom of the window should be in front of you), place it through the guide (5) on the left side of the cab, and then secure it with the support (6).

SIDE WINDOW

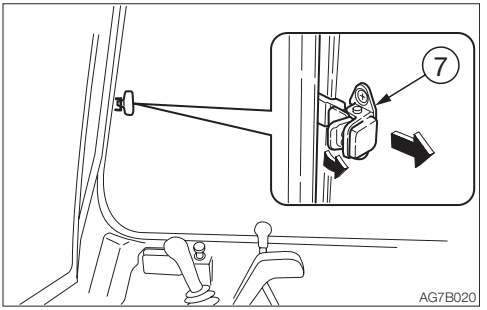

1. Grasp the catch (7), unlock it and open the side window.
2. To close the side window, close it until a click is heard.

SUN VISOR (IF EQUIPPED)

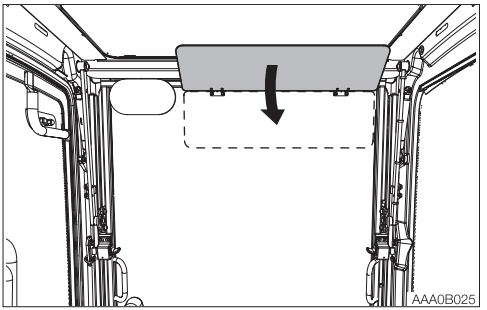

Use this device when the sunlight from the front is dazzling.

EMERGENCY HAMMER (OPTIONAL)

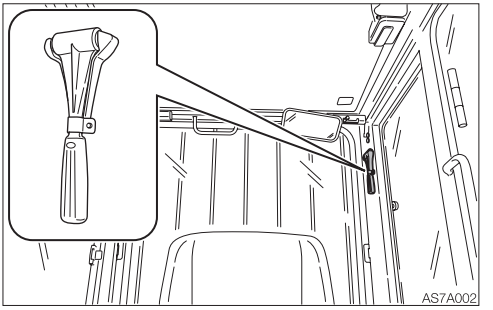

An emergency hammer is installed to be used to escape from the cab in an emergency. When escaping, break the windows with the hammer.

- When breaking the window pane with a hammer, take great care not to injure yourself with the broken glass pieces.
- Remove the glass pieces from the window sill so as not to cut yourself when evacuating. Broken glass will fall from the window, so be careful of your footing and do not slip on the glass.

SEAT AND SEAT BELT

SEAT

⚠ WARNING

- **Adjust and secure the seat.**
- **Do not make any adjustments while operating the machine.**
- **Do not set the backrest to its maximum reclining position and slide the seat backwards at the same time. Doing so may damage the rear window or cause injury.**
- **Remember that the backrest returns to the forward position abruptly due to the spring force.**

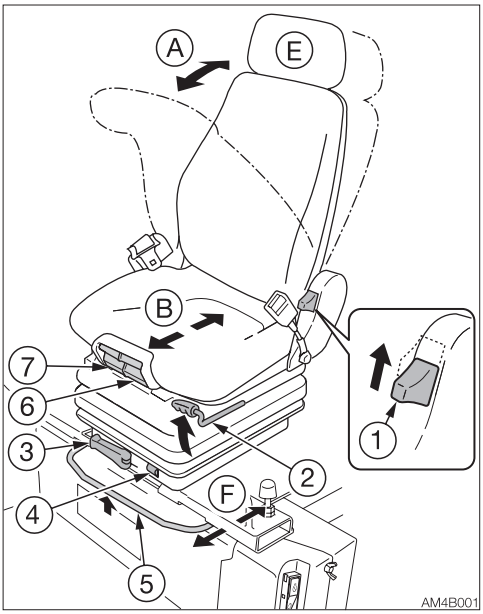

(A) Adjusting the backrest angle

1. Sit up and sit back in the seat.
2. Pull up the lever (1), recline the backrest by using the spring force. Release the lever (1) at the desired angle to secure the backrest.

(B) Fore-and-aft adjustment

1. Pull up the lever (2) and slide the seat backward or forward to the desired position for operation of machine.
2. Release the lever (2) at the desired position to secure the seat.
   Adjustment range: 15 positions, in 150 mm (5.9 in.)

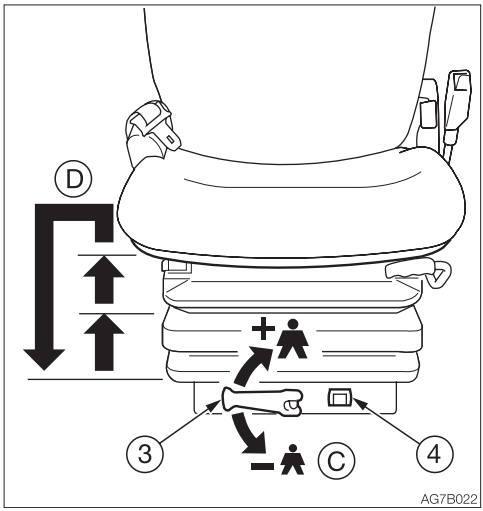

(C) Adjusting according to operator's weight

1. Turn the handle (3) until the scale (4) indicates the weight of operator.
   Adjustment range: 50 to 130 kg (110 to 287 lbs)

(D) Adjusting the height of the seat

Upward

1. Lift the seat to first or second position click-stop.
   Adjustment ranges: 2 positions, in 60 mm (2.36 in.)

Downward

1. First lift the seat to highest position, then the seat can be lowered to lowest position.

(E) Adjusting the headrest (Option)

The headrest (E) can be moved upward or downward.

1. Grab the headrest (E) with both hands, and move upward or downward to the desired position.

(F) Adjusting the operating lever stand

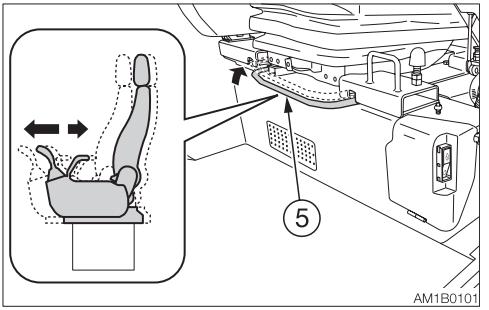

1. Pull up the lever (5) and slide the lever stand (seat).
2. Release the lever (5) at the desired angle to secure the lever stand (seat).
   Adjustment range: 9 positions, in 90 mm (3.5 in.)

(G) Adjusting the seat pan angle

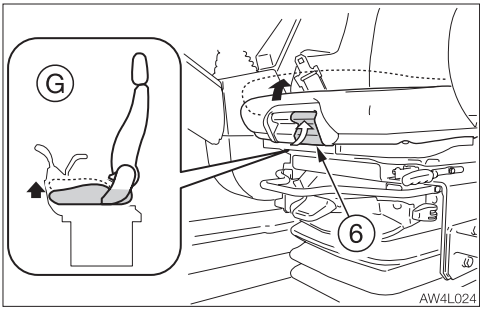

The angle of the seat pan can be individually adjusted.

To adjust, lift the left side handle (6). Use the pressure applied to the seat to set the seat pan to the desired angle.

(H) Adjusting the seat depth

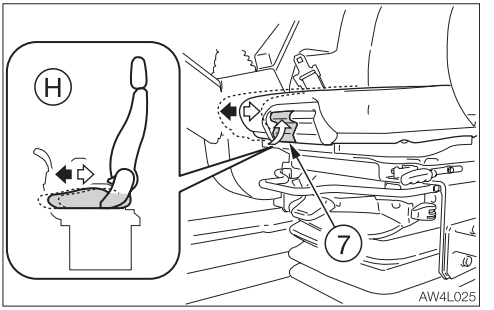

The depth of the seat pan can be individually adjusted.

To adjust, lift the right side handle (7). Move the seat cushion forward or backward until the desired seat depth is obtained.

SEAT BELT

⚠ WARNING

Be sure to fasten the seat belt securely before starting the engine.

Fastening the seat belt

1. Adjust the seat to the desired position for operation, sit upright and sit back in the seat.
2. Pull the seat belt to the desired length.

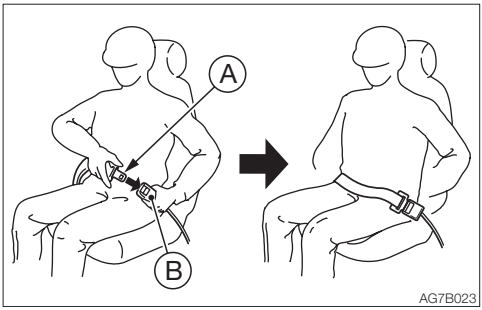

3. Make sure that the belt is not twisted and then insert the tongue plate (A) into the buckle (B) of the seat belt until you hear a clicking sound as it locks in place.
4. Check if the belt is securely locked by pulling it, and arrange the belt around your waist.

Releasing the seat belt

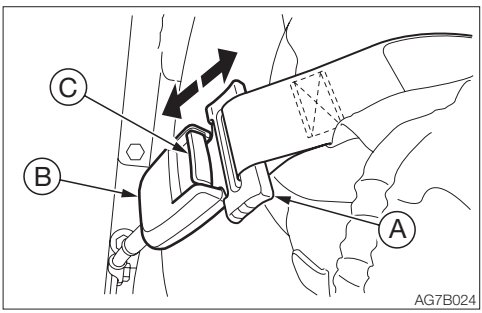

1. Grasp the tongue plate (A) and press the button (C) on the buckle (B).
   The seat belt retracts back into its original position.

MULTI-INFORMATION DISPLAY

HOME SCREEN

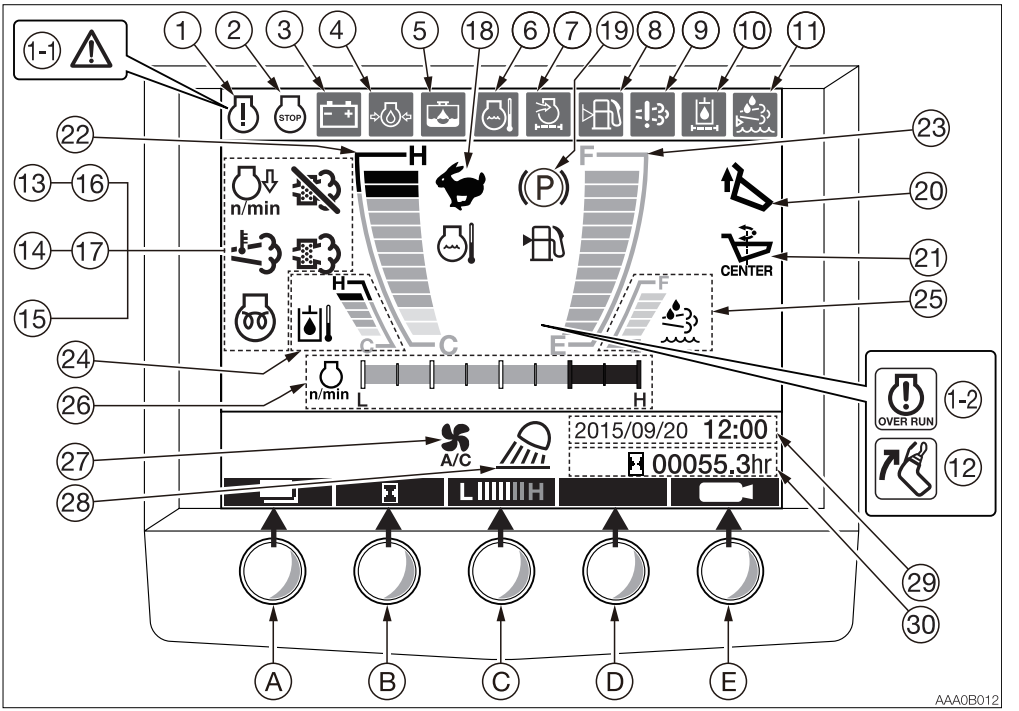

For explanation purposes, all lamps on the screen image above are in the lit condition. This screen image is different from that of the real operation. If a warning is displayed, the corresponding symbol appears at the center of the display for approx. three seconds. If a function is selected, the corresponding symbol appears at the center of the display for approx. one second.

When the ignition switch is set to ON, the battery charge warning lamp and the engine oil pressure warning lamp first appear enlarged, and then turn on with an alarm at their original locations. The machine system is normal if the lamps turn off after the engine is started.

WARNING LAMPS

IMPORTANT: If a warning lamp flashes and an alarm is sounded, immediately stop all operations and check the corresponding component.
Refer to “If a warning lamp flashes” on pages 6-14 and 6-15.

1. ECU error warning lamp
This warning lamp flashes if the Electronic Control Unit (ECU) detects an engine problem while the ignition switch is in the ON position. The problem detected is recorded as an ECU error.
Refer to “Engine error code list” on pages 6-18 to 6-29.

1-1. Vehicle and engine emergency lamp
If there is a problem with the machine, this lamp is displayed enlarged for three seconds, and then flashes with an alarm sounding. Go to “Error code display” from the Menu screen, get the vehicle or engine error code number, and consult your sales or service dealer referring to the “Vehicle error code list” or “Engine error code list” in this manual.
Refer to “Menu screen” on page 2-26.
Refer to “Error code display” on page 2-29.
Refer to “Vehicle error code list” on pages 6-16 and 6-17.
Refer to “Engine error code list” on pages 6-18 to 6-29.

1-2. Overrun warning indicator

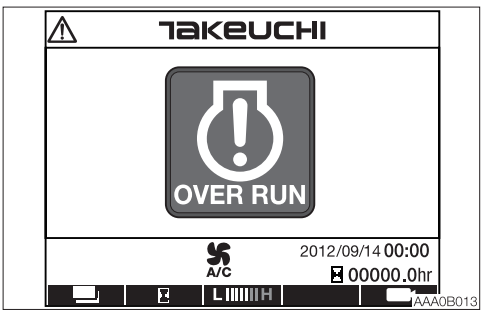

If the engine revolution becomes too high to cause the engine to overrun, the overrun warning indicator and the vehicle and engine emergency lamp are in turn displayed enlarged and the buzzer sounds. After the vehicle and engine emergency lamp is displayed enlarged, the cluster screen is as shown in the figure. If the engine revolution is further increased, the buzzer sound changes from intermittent to continuous. The main cause of overrun could be that the machine is descending slopes at high speed or that the overloaded machine is descending the slopes. If the indicator appears on the LCD, stop the machine and observe the following procedures.
- Move to a more gentle slope to descend.
- Keep the low speed by minimizing the travel lever inclination angle.
- Travel with the accelerator dial set to the half throttle or less.
- The machine may be overloaded. Reduce the load and travel.

2. Engine stop request warning lamp
While the ignition switch is ON, if a serious engine problem occurs and thus immediate engine stop is required, this warning lamp starts flashing. Immediately stop the engine and inspect the problem.

3. Battery charge warning lamp
This lamp flashes and an alarm is sounded if a problem rises in the charging system while the engine is running.

4. Engine oil pressure warning lamp
This lamp flashes and an alarm is sounded if the lubricant oil pressure abnormally low while the engine is running.

5. Water separator warning lamp
This lamp flashes and an alarm is sounded if the water is detected within the water separator while the ignition switch is in the ON position.

6. Coolant temperature warning lamp
This lamp flashes and an alarm is sounded if the engine coolant temperature becomes abnormally high while the engine is running.

7. Air cleaner warning lamp
This lamp flashes and an alarm is sounded if the air cleaner filter is clogged while the engine is running.

8. Fuel level warning lamp
This lamp flashes when the fuel level is low while the ignition switch is in the ON position.

9. SCR system/NCD warning lamp

· SCR system warning lamp
If an abnormality, such as failure to inject DEF/AdBlue® solution or degradation of the solution, is detected in the SCR system while the engine is running, this lamp either lights up or flashes and the buzzer sounds.

Lamp light-up conditions
The lamp lights up if the above-mentioned abnormality occurs, and remains lit until the engine running time reaches 3 hours and 40 minutes unless the abnormality is corrected. If another abnormality occurs within 40 hours of engine running time after the last abnormality is corrected, the lamp lights up again and remains lit for less than 10 minutes. Note that this new abnormality may be different from the previous one. The engine RPM and fuel injection amount are not limited, but depending on the abnormality, they may be limited to protect the engine system. If this happens, immediately correct the abnormality

Lamp flashing conditions
If the abnormality is not corrected within the engine running time of 3 hours and 40 minutes, the lamp starts flashing and keeps flashing until the end of the engine running time of 4 hours unless the abnormality is corrected. If another abnormality occurs between the time that the abnormality (flashing) is corrected (light off) and the time that the engine running time reaches 40 hours, the lamp starts flashing again and keeps flashing for 10 to 30 minutes. At this time, the engine RPM is limited to the maximum torque rotation speed + 200 min^{-1} and the fuel injection amount is limited to 50%. If the engine running time exceeds 4 hours from the time the abnormality occurred, or if the engine running time exceeds 30 minutes from the time the reoccurred abnormality was corrected, the engine RPM is limited to low idle and the fuel injection amount is limited to 50%. If this happens, immediately correct the abnormality.

· NCD warning lamp
RED:This lamp flashes and an alarm is sounded if the NOx control detects any error.
NCD: NOx Control Diagnostic system

10. Pilot line filter warning lamp

This lamp flashes and an alarm is sounded if the pilot line filter for the hydraulic oil is clogged while the engine is running. This lamp may flash immediately after the engine is started in cold weather. This is not a malfunction. The lamp will turn off as the engine warms up.

11. DEF/AdBlue® level warning lamp

If the level of DEF/AdBlue® substantially decreases while the engine is running, this lamp either lights up or flashes and the buzzer sounds.

Lamp light-up conditions

The lamp lights up if the level of the DEF/AdBlue® level meter decreases to 10% or less. The engine RPM and fuel injection amount are not limited, but DEF/AdBlue® must be added immediately.

Lamp flashing conditions

If the DEF/AdBlue® level is decreased to 0%, the warning lamp flashes and the fuel injection amount is limited to 75%. If the DEF/AdBlue® level in the fuel tank is zero (unable to draw up DEF/AdBlue®), the engine RPM is limited to low idle and the fuel injection amount is limited to 50%. If this happens, immediately add DEF/AdBlue®.

Note: The Selective Catalytic Reduction (SCR) system is a system to reduce NOx emissions into the atmosphere, by spraying the DEF/AdBlue® solution (reduction agent) into the exhaust gas.

12. Safety start warning lamp

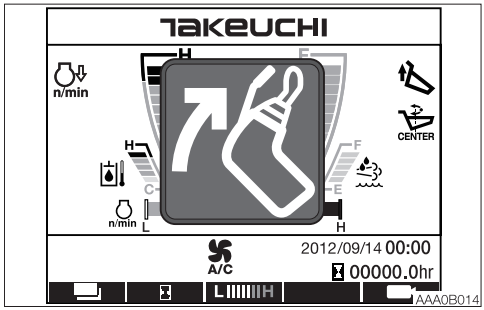

This lamp appears enlarged on the display and the buzzer sounds if the engine is started when the safety lock lever is in the unlock position. The engine cannot be started. First, set the safety lock lever to the lock position, and then start the engine.

INDICATORS

13. Deceleration indicator lamp

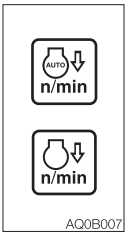

..... Automatic deceleration mode

..... Deceleration mode

Automatic deceleration mode
When the ignition switch is turned to ON, this lamp turns on to indicate that the engine is in the automatic deceleration mode.
The engine speed automatically drops to low idle (deceleration mode) four seconds after the control levers are set to neutral, to reduce fuel consumption. Moving the control levers will cause the speed to return to the original engine speed.

Deceleration mode
This lamp turns on when the deceleration button is pressed. The lamp lights up to indicate that the engine is in the deceleration mode at low idling speed (1200 rpm).
Refer to “Deceleration button” on page 2-32.

14. Exhaust temperature warning indicator lamp

This indicator lights up to warn if the exhaust temperature is abnormally increased. Check for any flammable items around the exhaust piping.

15. Glow indicator lamp

This indicator lamp turns off when the engine preheating is completed.

16. DPF auto regeneration/inhibit indicator lamp

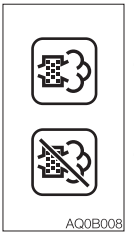

..... DPF auto regeneration under way

..... DPF auto regeneration inhibit

DPF auto regeneration under way
The DPF regeneration is automatically performed by the engine, when certain criteria are met. The operator only has to check the display.

DPF auto regeneration inhibit
The DPF manual regeneration inhibit symbol appears on the display when the DPF manual regeneration under way or the DPF auto regeneration under way is cancelled.
Refer to “DPF manual regeneration/ inhibit select switch” on page 2-34.

17. DPF manual regeneration under way/ regeneration promoting/DPF manual regeneration error indicator lamp
The indicator starts flashing and an alarm starts sounding, if the accumulated PM exceeds the limited amount on the DPF. Immediately perform the manual DPF regeneration.
Refer to “DPF manual regeneration/ inhibit select switch” on page 2-34.

Note: When the DPF manual regeneration is started, there may be a case that the symbol corresponding to the error source is repeatedly displayed, resulting in DPF manual regeneration error. This problem will disappear after a while. If it continues for more than 15 minutes, contact your sales or service dealer for repair.

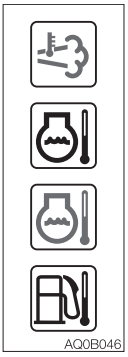

..... Exhaust temperature is too low.

..... Orange: Water temperature is too high.

..... Blue: Water temperature is too low.

..... Fuel temperature is too high.

18. Travel speed indicator lamp

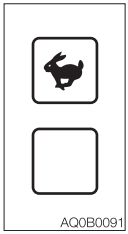

..... High-speed travel

..... Low-speed travel

This lamp turns on when the travel speed button is set to the 2nd (high) speed.

19. Parking brake indicator lamp
This lamp turns on when the parking brake switch is pressed.

20. Dump body raising indicator lamp

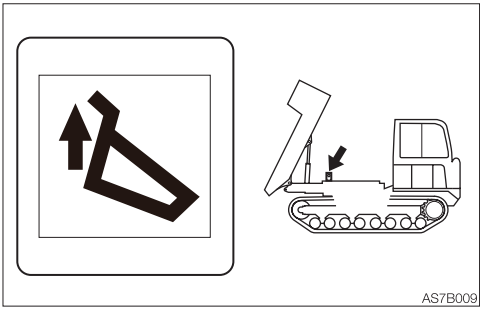

This lamp lights up when the dump body is raised and moves out of the sensor's range. It goes out when the dump body is lowered all the way down.

21. Dump body alignment indicator lamp

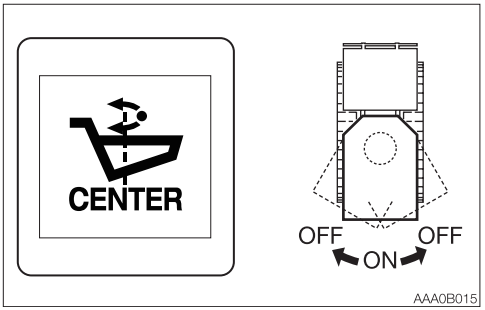

This lamp lights up when the orientation of the dump body is parallel to the main frame. The lamp goes out when the dump body swings to the left or right.

22. Water temperature gauge

Indicates the temperature of the engine coolant water. The indicator level must be within the green range during machine operation. The red range indicates overheating.

23. Fuel gauge

Indicates the amount of fuel in the tank. Be sure to fill up the tank before running out of fuel.

24. Hydraulic oil thermometer

This instrument indicates the temperature of the hydraulic oil. The level must be within the green range during machine operation.
The red range indicates overheating.
This symbol flashes if the hydraulic oil temperature becomes abnormally high while the engine is running.

25. DEF/AdBlue® level indicator

This meter Indicates the amount of the DEF/AdBlue® solution remaining.
Be sure to refill the tank in good time before running out of DEF/AdBlue®.

26. Engine load factor indicator

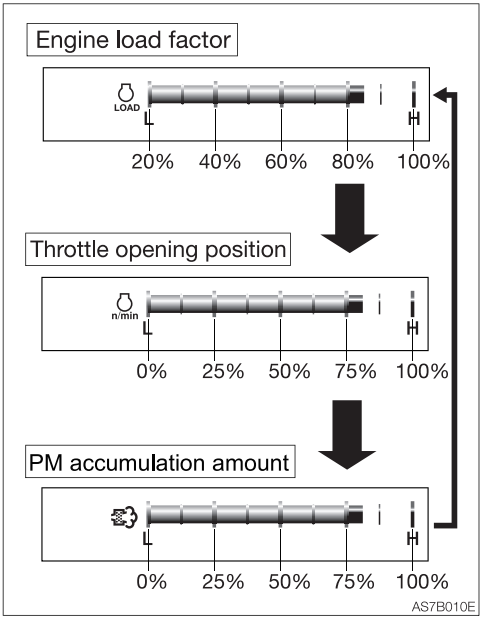

This gauge displays the load condition of the work. When the gauge is in the green range, the work load is light to medium. When the gauge is in the red range (75% or more), the work load is high. When the button (C) (Bar meter key) is pressed in a normal screen, the display changes in the following order: the engine load factor, throttle opening position and PM accumulation amount indicator.
Note: The machine is not faulty if the gauge is in the red range. Operating the machine with the gauge being in the green range is energy-saving and will help conserve the global environment.

- The throttle opening position is displayed if there is a change in the throttle opening position.

27. Air conditioner indicator lamp (If equipped)

Lights up while the air conditioner is operating.

28. Working lights indicator lamp

Lights up when the working light is turned on.

29. Date and time indicator

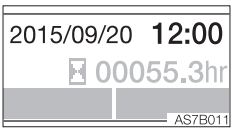

Displays the date and time set.
Refer to “Date and time setting” on page 2-28.

30. Hour meter/Trip meter

• Hour meter

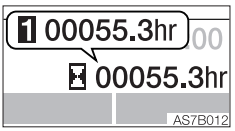

Displays the total engine running time in hours.
The rightmost digit indicates tenths of hours (6 minutes).
Set the inspection and maintenance intervals according to the time displayed on the hour meter.

• Trip meter

Three patterns of desired operating hours can be displayed.
Refer to “Trip meter setting” on page 2-27.

SCREEN CONTROL KEY

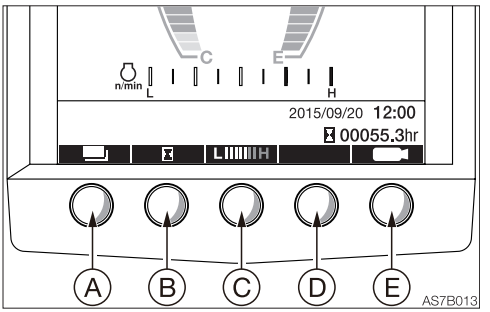

Note: Do not press the symbol keys on the display. The LCD could be damaged if the symbol keys are pressed hard. For actual operation, press the push button keys located at the bottom of the screen.

A. Menu key

Use this key to switch between the Home screen and the Menu screen. This key is also used to cancel changes made in each setting. The screen returns to the Home screen if this key is pressed in the information screen.

B. Hour meter key

This hour meter symbol is displayed in the initial screen. Pressing this key changes the meter display in the following order: the trip meter 1, trip meter 2, trip meter 3 and hour meter.

Down (↓) key
Use this key to move the cursor ▶ downward and to decrease the value in each setting. Press and hold this key for one second to rapidly decrease the value.

C. Bar meter key

This bar meter symbol is displayed in the initial screen. Pressing the key changes the meter display in the following order: the engine load factor, throttle opening position and PM accumulation amount.

Up (↑) key
Use this key to move the cursor ▶ upward and to increase the value in each setting. Press and hold this key for one second to rapidly increase the value.

D. Enter key

Use this key to confirm or execute the setting made by each key.
To clear the trip meter being displayed, press and hold this key for three seconds.

E. Camera image key

⚠ WARNING

Do not look at the images produced by the camera when traveling in reverse. Move in reverse while visually looking at the direction of travel.

Since the camera is installed at the back of the dump body, the screen can be used to check the position or condition of dumping, as well as to display the rear view image.

Note: When the screen is used as a rear view monitor while traveling, make sure that the dump body is parallel to the main frame and the dump body alignment indicator lamp is on. It is dangerous to use the monitor when the dump body is swinged.

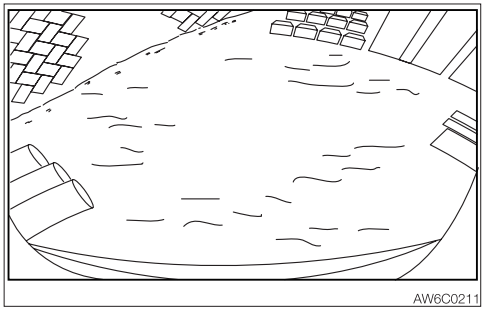

1. Press the Camera key in the Main screen to display the images taken by the rear camera.
2. Press the Camera key again or other key to return to the Main screen.

SCREEN NAVIGATION

• Menu screen

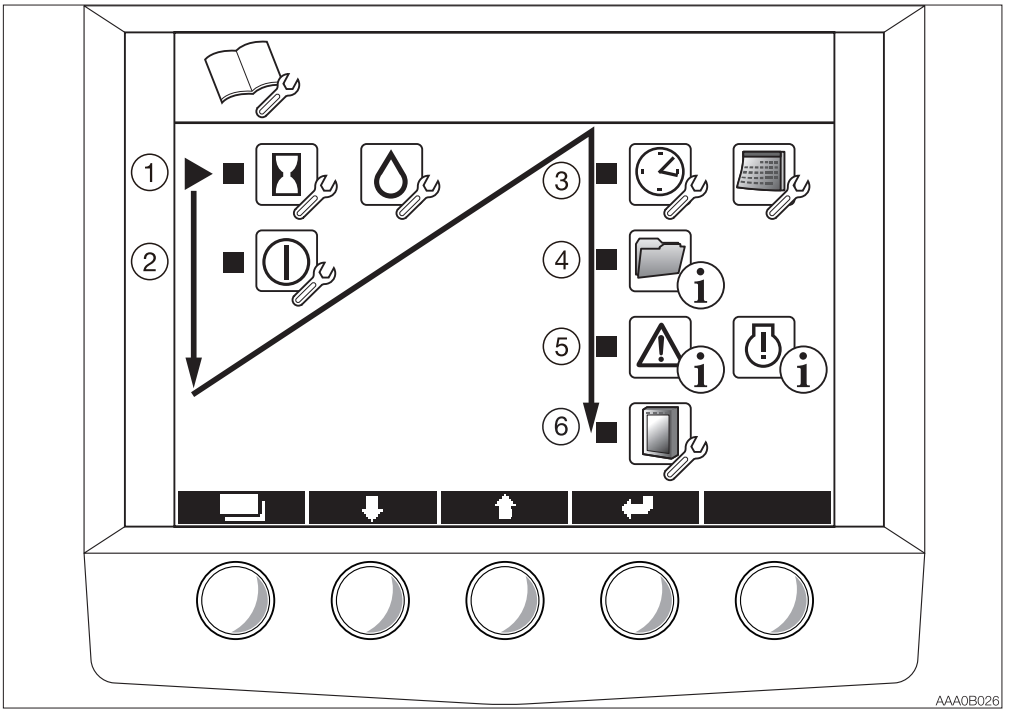

Press the Menu key to go the Menu screen while in the Home screen.

(1) Trip meter setting
(2) ON/OFF setting
(3) Date and time setting
(4) Data display
(5) Error code display
(6) LCD setting
Move the cursor ▶ with the Up (↑) or Down (↓) key to go to the desired item to be set, and then press the Enter key to confirm. To return to the Menu screen, press the Menu key.
The wrench symbol indicates the “setting is possible state” and the (i) mark indicates information only.

(1) TRIP METER SETTING

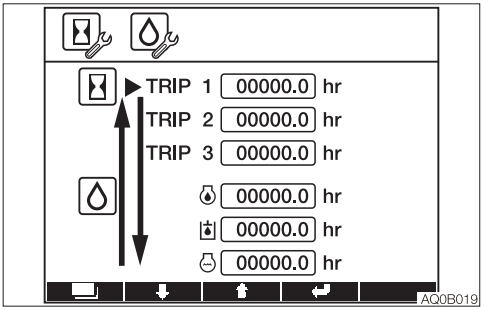

Six patterns of desired operating hours can be set.
To start setting, press the Enter key. The value flashes while being set.
Up (↑) key: Increases the value or moves the cursor ▶ upward. Rapidly increases the value when pressed and held for one second.
Down (↓) key: Decreases the value or moves the cursor ▶ downward. Rapidly decreases the value when pressed and held for one second.
Enter key: Confirms setting
Menu key: Cancels setting or returns to the Menu screen.
Pressing and holding the Enter key for three seconds clears the trip meter pointed by the cursor.

(2) ON/OFF SETTING

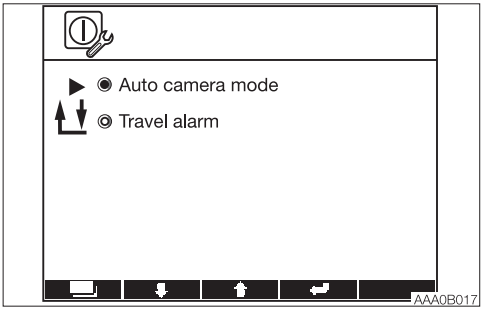

The auto camera mode and the travel alarm can be set to ON or OFF.
To return to the machine setting screen, press the Menu key.
Use the Up (↑) or Down (↓) key to move the cursor ▶, and then press the Enter key to turn on or off the blue circle.
Blue circle is lit: ON
Blue circle is off: OFF

(3) DATE AND TIME SETTING

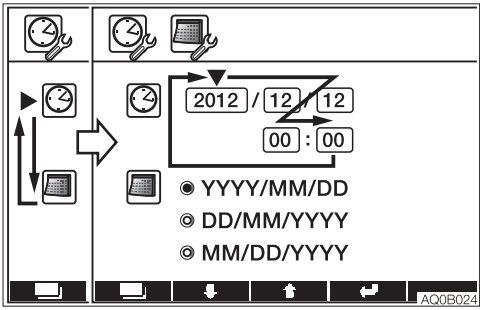

The year, month, date, hour and minute can be set. (Effective year range: 2010 to 2099)

- Move the cursor ▶ to the clock symbol, and then press the Enter key. The cursor ▼ will be shifted to the place for setting the year.
  Press the Enter key again, and then enter the year. (The year display keeps flashing during editing.)
  Press the Enter key to confirm. The month, date, hour and minute can be set using the same procedure for the year.
- Move the cursor ▶ to the calendar symbol, and then press the Enter key to change the format of “Year-Month-Date” to “Date-Month-Year” or “Month-Date-Year”.
  Refer to the trip meter setting for the key operation.

(4) DATA DISPLAY

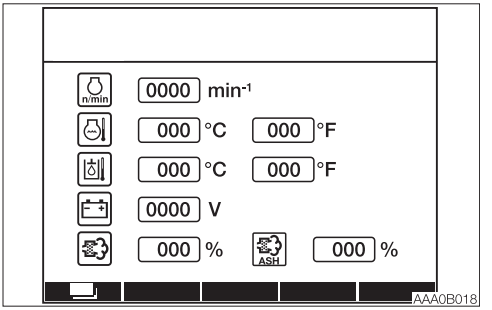

Displays various data. The setting cannot be changed.

Display items

- Engine RPM
- Coolant temperature
- Hydraulic oil temperature
- Battery voltage
- PM accumulation amount
- Ash accumulation amount

Note: For the data item not applicable to this machine, N/A is displayed.

(5) ERROR CODE DISPLAY

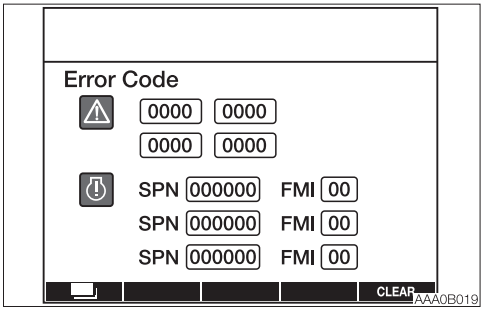

⚠.....Vehicle error code
Displays four error codes, with the latest code in the upper left.
Refer to “Vehicle error code list” on pages 6-16 to 6-17.

.....ECU error code
Engine Control Unit (ECU) error code
Displays three error codes, with the latest code at the top.
Refer to “Engine error code list” on pages 6-18 to 6-29.

IMPORTANT: If an error code appears, immediately stop the operation and contact a Takeuchi sales or service outlet for help.

(6) LCD SETTING

- **Background color setting**

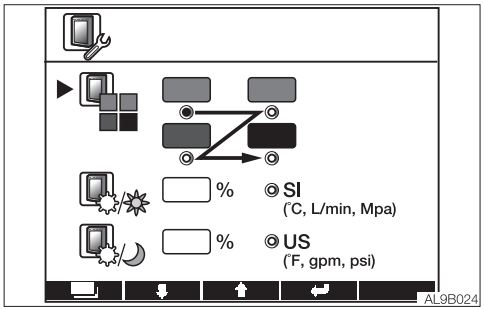

Move the cursor ▶ to the background color symbol, and then press the Enter key. The blue flashing light moves from blue gray to gray, blue and black, in this order. Move the blue flashing light to the desired color position, and then press the Enter key to confirm.
The background color can be changed in this screen, regardless of mode (day or night).

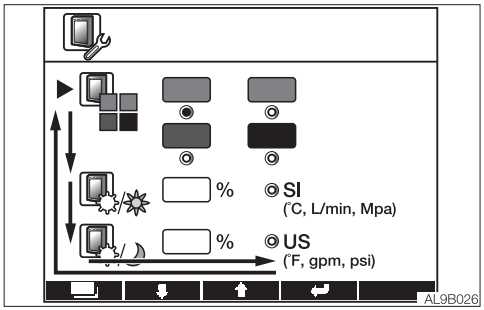

- **The brightness of the LCD is set to between 0 and 100%.**
The brightness changes each time the adjustment is made.
While in the day (night) mode, adjustment is possible only for the brightness set to the night (day) mode.
Refer to the trip meter setting for the key operation.

• **Unit setting**
Switch between SI unit and US units. Move the blue flashing light to the desired unit position, and then press the Enter key to confirm.

Menu key: returns to the Menu screen. Pressing the Menu key again returns to the Home screen.

SWITCHING IMAGES

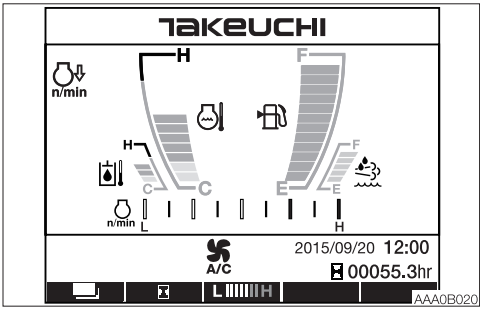

• **Changing the background color (day/night)**

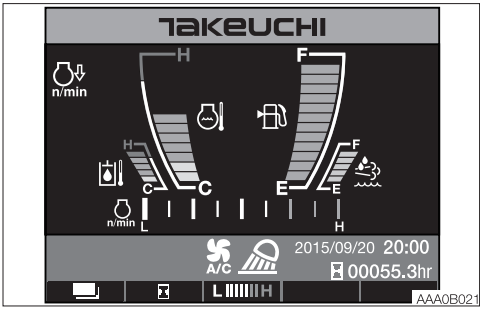

Turn on the light switch on any screen to decrease the display brightness and to enter the “evening mode”.

SWITCHES

IGNITION SWITCH

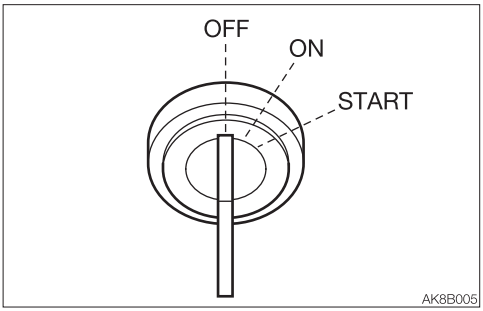

IMPORTANT: Do not repeatedly switch the key from OFF to ON and ON to OFF over a short period. Doing so will cause engine breakdown.

OFF ..... Position for stopping the engine and inserting or removing the key.
ON ..... Position in which the engine is running. At this position, all the electrical equipment is functional. When the coolant temperature is too low, the engine is automatically preheated.
START ..... Position for starting the engine. When the key is released, the switch automatically returns to the ON position.

ENGINE SHUTDOWN SWITCH

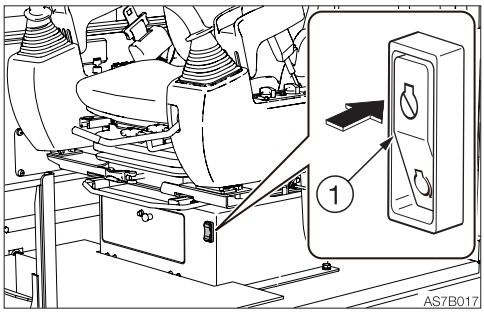

This switch is used to shutdown the engine if it fails to stop, due to machine failure or breakage, when the ignition switch is set to the OFF position.
1. Press the switch (1).
2. After use, reset the switch (1).

THROTTLE CONTROLLER

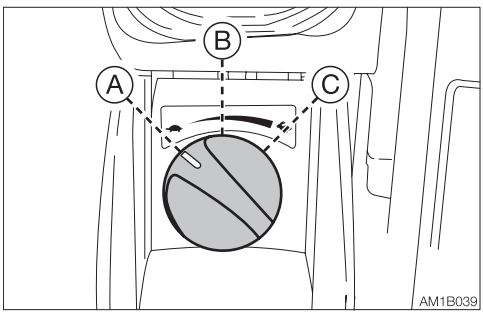

This dial controls the engine speed.
(A).....Low idling
(B) .....Medium speed
(C) .....Maximum speed

HORN BUTTON

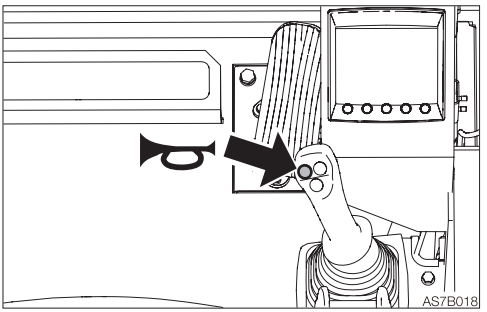

Press the button situated on the right operating lever to blow the horn.

DECELERATION BUTTON

⚠ WARNING

Before operating the deceleration button, set the operating lever to the neutral position and take your foot off the pedals. If the deceleration button is pressed while driving, the machine's operating speed will abruptly change to result in a dangerous situation.

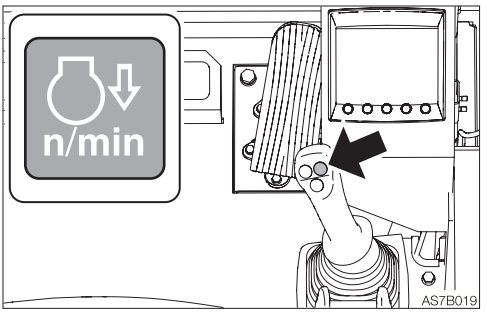

Press this button on the right operating lever to lower the engine speed to low idling. Press the button again to return to the engine speed set with the throttle controller. For safety reasons, it is designed that the deceleration function is activated to set the engine revolutions to low idling whenever the engine is started.
Cancel the deceleration mode by pressing the deceleration button as necessary.

Note: This deceleration button is capable of decreasing the engine speed and reducing the fuel consumption, with a simple operation, in a situation such as when little engine output is required and thus the operating or the travel levers are in neutral.

TURN SIGNAL BUTTONS

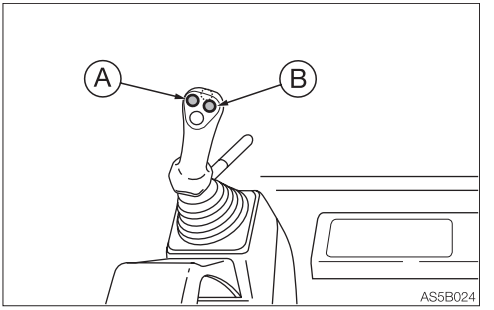

The turn signal starts flashing and an alarm is sounded once any of the buttons is pressed.
(A).....Left turn lights
(B) .....Right turn lights

TRAVEL SPEED BUTTON

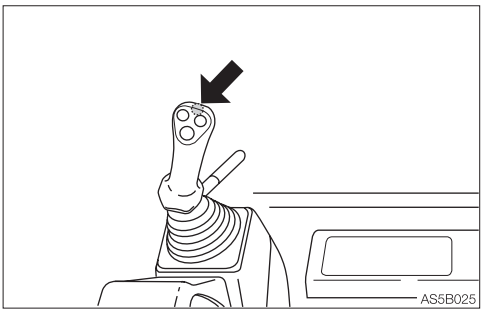

Press this button to set the travel speed to 2nd (high) speed. Press it again to return to 1st (low) speed.

AUTOMATIC DECELERATION SWITCH

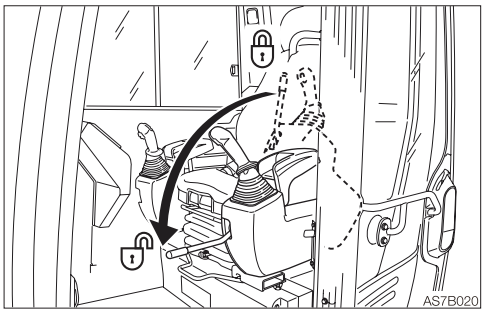

When the safety lock lever is lowered to the unlock position, the deceleration lamp in the multi-information display flashes. This flashing stops when the deceleration function starts working, and the lamp remains lit while in the deceleration mode. The engine speed automatically drops to low idle (deceleration mode) four seconds after the control levers are set to neutral, to reduce fuel consumption. Moving the control levers will cause the speed to return to the original engine speed.

DPF MANUAL REGENERATION/INHIBIT SELECT SWITCH

⚠ WARNING

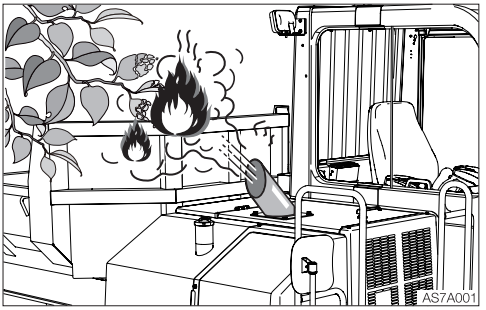

- The DPF and the exhaust gas emitted from the exhaust line can be very hot while the engine is running or the regeneration is under way, as well as immediately after the engine is stopped. Be careful not to accidentally touch them; doing so could cause burns.
- Do not perform the DPF regeneration if the machine is surrounded by flammable items such as plants, trees, dry grass, wastepaper, oil and waste tires. There is a risk of fire due to the high-temperature exhaust gas emitted from the DPF.
- Do not perform the DPF regeneration in poorly-ventilated indoor spaces, as smoke could be generated during the DPF regeneration or carbon monoxide poisoning could result.
- Do not perform regeneration when the engine hood is open. There is a risk of fire due to the high-temperature exhaust gas emitted from the DPF.

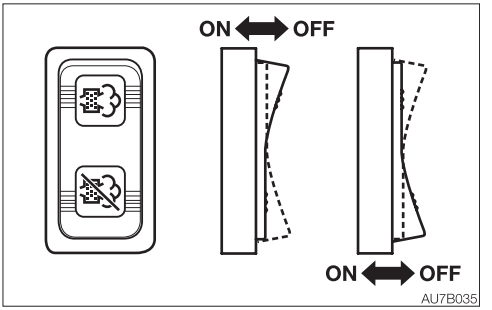

IMPORTANT: Press the manual regeneration side on the DPF manual regeneration/inhibit select switch to burn the particulate matter (PM), when the DPF manual regeneration lamp flashes and an alarm sounds. If the machine continues to be operated without performing the manual regeneration, the engine power will decrease and eventually the engine will stop running. The ECM warning display will also flash if the DPF needs to be repaired. A number appears on the engine error code screen. Refer to the "Engine error code list" and contact a Takeuchi sales or service dealer for repair.

- **DPF manual regeneration**
  When the DPF manual regeneration symbol on the display starts flashing and an alarm starts sounding, perform the DPF manual regeneration by following the procedure below.
  1. Park the machine in a safe place where there is no fire hazard.
  2. Raise the safety lock lever to the lock position.
     · Do not lower the safety lock lever and move the control levers during regeneration. Doing so interrupts the regeneration.
  3. Decrease the engine speed to low idling.
  4. Press and hold the manual regeneration side on the DPF manual regeneration/ inhibit select switch.

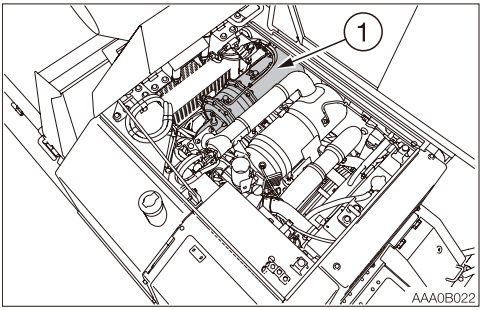

5. The manual regeneration symbol stops flashing and remains lit to indicate that the engine RPM is automatically increased and the DPF (1) regeneration (PM burning) has started.
6. Release the switch. Do not leave the machine during regeneration.
   It takes approximately 25 to 30 minutes, depending on the ambient temperature, to complete the regeneration operation.
7. The manual regeneration symbol goes off to indicate the end of manual regeneration.

Note:
- Since the exhaust gas is cleaned through the catalyst fitted inside the DPF, it has a smell different from that of the conventional diesel engine.
- In some cases smoke may be emitted from the tail pipe while the DPF regeneration is being performed. This is not a failure; it is due to burning of the particulate matter (PM).
- It is normal that a sound is produced when the DPF regeneration is started or completed; This is to adjust the air-intake throttle and EGR opening position.
- In some cases the noise associated with the DPF regeneration operation or cancel operation may change; this is not a failure.
- The DPF manual regeneration can be completed faster while the machine engine is warm rather than cold. Note that the manual regeneration does not start unless the coolant temperature is higher than a set value. The coolant temperature may increase while manual regeneration is being performed.
- Since the DPF regeneration is designed to work only when the accumulated particulate matter (PM) in the filter exceeds a certain amount, it will not start otherwise, even if you attempt to perform manual regeneration.

- **DPF regeneration inhibit (cancel)**
  To cancel the DPF regeneration currently being processed (manual or auto), press the regeneration inhibit symbol side.
  The DPF regeneration inhibit symbol appears on the display, and the regeneration operation must be performed again. Start the manual regeneration procedure from Step (1) above, as soon as possible. Do not press the DPF regeneration inhibit switch unless there is a risk of fire.
  To cancel, press the switch again. Turning the ignition switch to OFF will also cancel the operation.
  Refer to “DPF auto regeneration/inhibit indicator lamp” on page 2-20 and “DPF manual regeneration under way/ regeneration promoting/DPF manual regeneration error indicator lamp” on page 2-21.

PARKING BRAKE SWITCH

⚠ WARNING

It is dangerous to press this button while traveling, as it causes the machine to stop abruptly. It may also damage the travel motors. Do not press this button while traveling except in emergency.

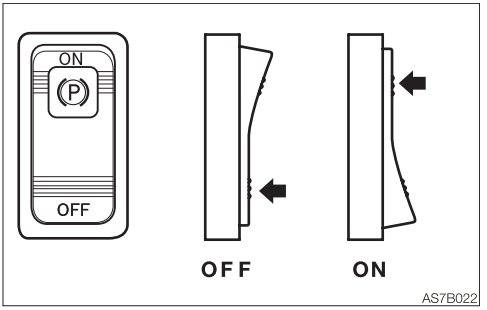

Pressing this button will light up the indicator and activate the parking brake.
ON .....Forced activation of the parking brake
OFF ....Automatic activation of the parking brake.
Even when this button is OFF, the parking brake is automatically activated when the machine stops traveling.

WORKING LIGHT SWITCH

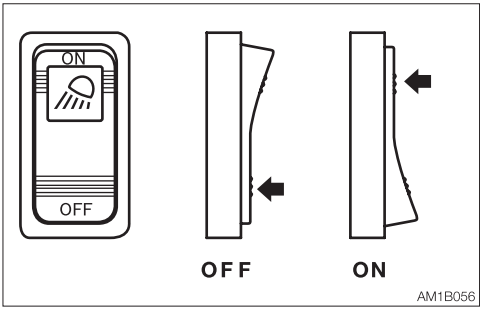

When this switch is turned while the ignition switch is at ON, the lights turn on as follows:

OFF ....Off
ON .....Switch lamps, front light will be lit.

FRONT WIPER SWITCH

IMPORTANT: If no washer fluid is discharged, do not operate the washer. Doing so may damage the pump.
IMPORTANT: Operating the wiper with no moisture on the windshield will scratch the glass. Use water or washer fluid when operating the wiper.
IMPORTANT: In cold climates, the wiper blade may freeze to the glass. Operating the wiper forcibly may damage the wiper motor.

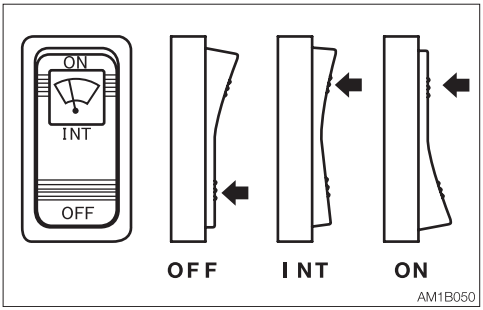

OFF ....Off
INT .....Intermittence operation
ON .....Continuous operation

WASHER SWITCH

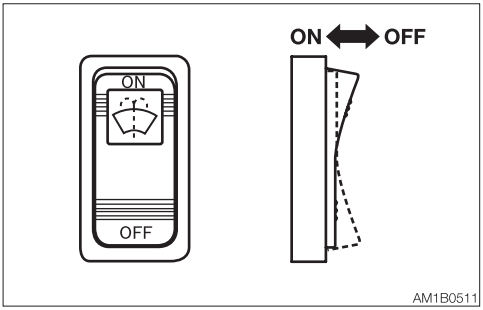

ON .....Pressing the ON side of the switch causes the washer to spray washer fluid. To stop spraying, release the switch.

BEACON LAMP SWITCH (IF EQUIPPED)

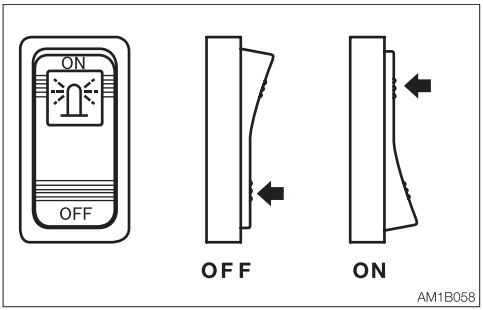

When this switch is turned on while the ignition switch is at ON, the lamp turns on as follows:
OFF ....Off
ON .....Beacon lamp is lit

REAR WIPER/WASHER SWITCH

IMPORTANT: If no washer fluid is discharged, do not operate the washer. Doing so may damage the pump.
IMPORTANT: Operating the wiper with no moisture on the windshield will scratch the glass. Use water or washer fluid when operating the wiper.
IMPORTANT: In cold climates, the wiper blade may freeze to the glass. Operating the wiper forcibly may damage the wiper motor.

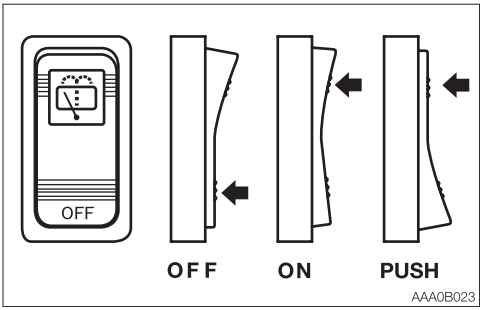

OFF ..... Off
ON ..... Wiper operates
PUSH .... Sprays washer fluid when pressed. Stops when released.

LEVERS AND PEDALS

SAFETY LOCK LEVER

⚠ WARNING

- **Before standing up from the operator's seat to open/close the window, remove/install the lower window or adjust the operator's seat, lower the dump body all the way, raise the safety lock lever to engage the lock and stop the engine. If any control is accidentally touched when the safety lock lever is lowered (unlocked), the machine will suddenly move and cause serious injury or death.**
- **Be careful not to touch the operating levers when raising or lowering the safety lock lever.**
- **Before leaving the operator's seat, fully lower the dump body, raise the safety lock lever to engage the lock and stop the engine. Also, be sure to remove the key, lock the cab, fuel filler cap and covers, take the key with you and store it in a specified place.**

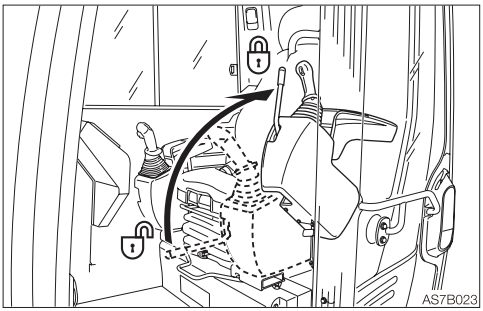

This device is for locking the dump body and travel operation.
When the lever is raised, the lever stand springs up to lock the lever.

Safety start function

When the lever is in the unlock position, the engine cannot be started.

CONTROL LEVERS

⚠ WARNING

Before starting operation, carefully check which lever pattern you are going to use.

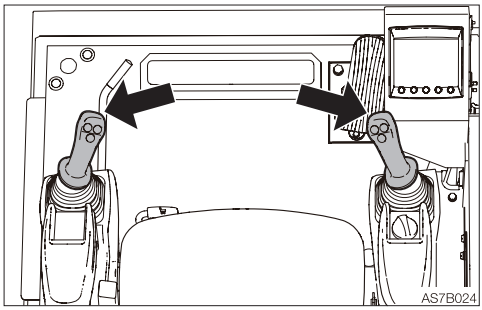

Right control lever

Use this lever to operate the dump body.
Refer to "Lever pattern" on page 3-6.
Refer to "Operating the dump body" on page 3-13.

Left control lever

Use this lever to move forward and in reverse and to change directions.
Refer to "Lever pattern" on page 3-6.
Refer to "Traveling the machine" on page 3-10.

THROTTLE PEDAL

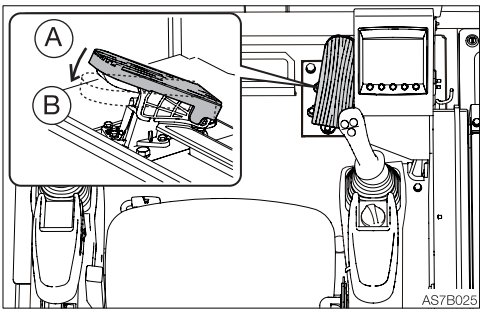

Releasing the pedal will return to the engine speed set with the throttle controller.
(A).....Low idling
(B) .....Maximum speed

ACCESSORIES

AIR CONDITIONER (IF EQUIPPED)

CAUTIONS ON USE

Ventilate periodically

- When using the air conditioner over an extended period of time, open the windows about once each hour to let in fresh air.
- Your eyes may become irritated if you smoke while using the air conditioner. If this happens, open the windows to let in fresh air. Smoking particularly irritates the eyes when the air conditioner is being used. Since the humidity in the cab drops, the cornea becomes dry.
- If the outside air is dirty, set the air conditioner to the circulation mode.

Always maintain good visibility

Working with dirty windows or fogged windows restricts visibility and is dangerous. Always clean dirt and moisture off the windows before working.

- The windows tend to get foggy when the humidity is high. If this happens, turn on the air conditioner to use outside air and the defroster to get rid of the fog.
- If the air conditioner is set to high when using the defroster, the difference between the external and internal temperatures increases, resulting in frost on the outside of the windows. If this happens, either turn the air conditioner off or turn the temperature control dial clockwise to increase the internal temperature.
- Mist may blow out of the air outlets. This is not a malfunction. When moist air passes through the evaporator on the air conditioner unit, water particles in the air freeze and are emitted as mist.

Do not overcool

For health reasons, the air inside the cab should be kept at a temperature at which you feel a little cool when entering the cab from outside (a difference of 5 to 6°C (9 to 11°F)). Remember to adjust the temperature properly.

Do not turn on the air conditioner until the engine is started

To avoid placing an excessive load on the compressor, wait until the engine is started and is running smoothly before turning on the air conditioner.

Let hot air out first

If the machine has been parked in the sun, open the windows and door to let the hot air out of the cab before using the air conditioner.

Caution on refrigerant (gas)

If the refrigerant comes in contact with skin or eyes, it may cause frostbite or eye damage. Never touch the refrigerant or loosen the parts on the cooling circuit.
If the refrigerant gas leaks, keep flames away.

Off-season inspection

Even off season, run the air conditioner for 3 to 5 minutes at least once a week to maintain oil in the various parts of the compressor.

NAMES OF COMPONENTS

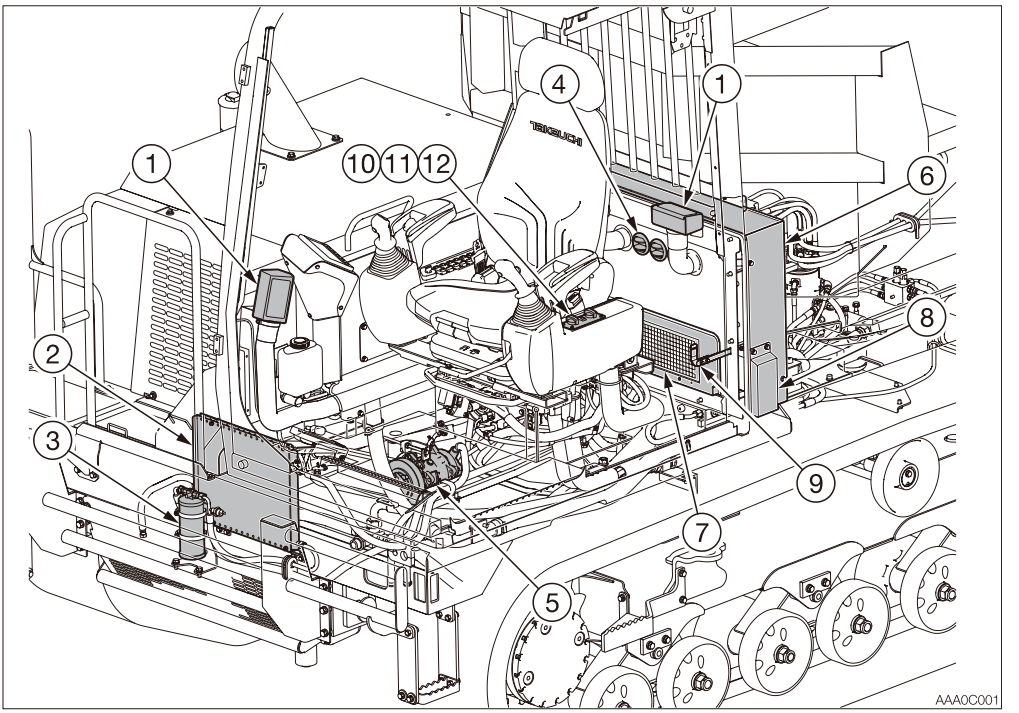

1. Defroster
2. Condenser
3. Receiver dryer
4. Outlets
5. Compressor
6. Air conditioner unit
7. Circulation filter
8. Ventilation filter
9. Ventilation/Circulation select lever

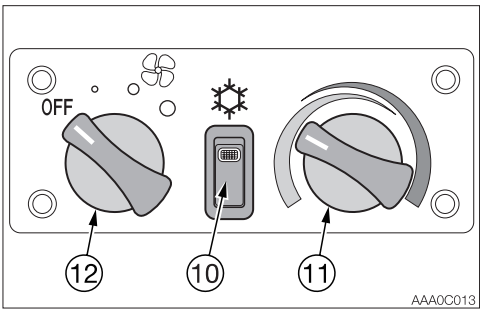

Control panel

10. Air conditioner switch
11. Temperature control dial
12. Fan dial

Air conditioner switch

IMPORTANT: To avoid placing an excessive load on the compressor, wait until the engine is started and is running smoothly before turning on the air conditioner.

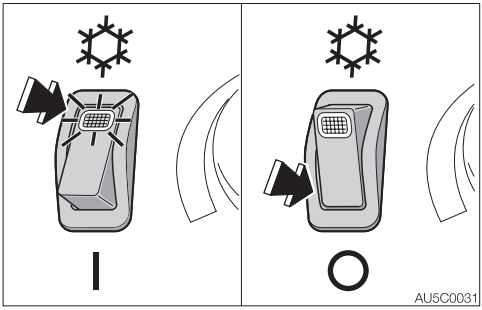

Use this switch to turn on or off the cooling/dehumidifying function. When this switch is pressed while the engine is running with the fan dial set to ON, the lamp lights up and the cooling/dehumidifying function is turned on. Press this switch again or turn the fan dial to OFF to turn off the cooling/dehumidifying function.
Lamp is off ..... OFF
Lamp is on ..... ON
Note: To prevent leakage of refrigerant gas from the compressor's seal, operate the air conditioner at least once a week, regardless of the season.
Note: The air conditioner will not function if the temperature in the cab is low (3°C (38°F) or lower).

Fan dial

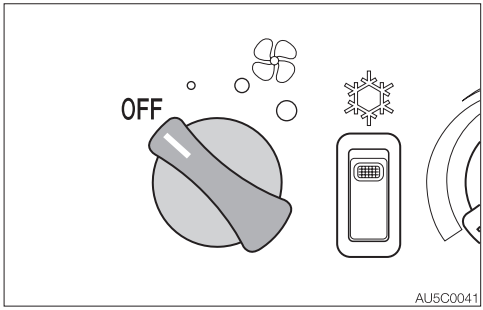

Use this dial to select the fan speed from the three levels. Turning this dial to the OFF position turns off the air conditioner.
OFF ....Turning off the fan and the air conditioner.
∘ .....Low
○ .....Medium
◯ .....High

Temperature control dial

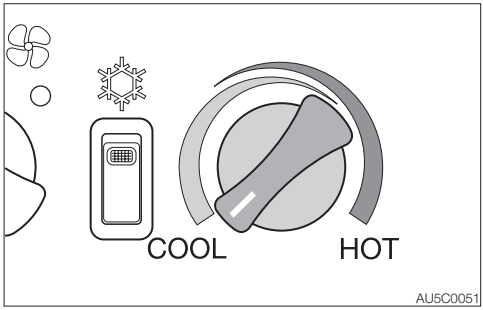

Use this dial to adjust the air temperature.
COOL..... Decreases the temperature
HOT ..... Increases the temperature
Note: No warm air is emitted if the temperature of the engine coolant is low.

Outlets

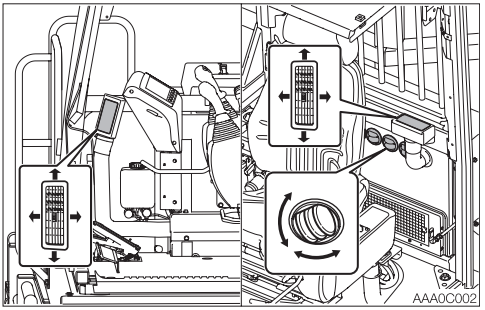

Move the louvers up or down or left or right to adjust the air flow direction and volume.

Ventilation/Circulation select lever

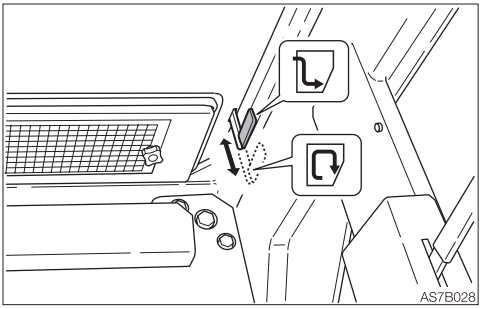

Use this lever to select between Ventilation and Circulation.

⟲ ..... Circulation
- Cool or heat the cab quickly
- When external air is dirty

⟲ ..... Ventilation
- Lets in fresh air
- Removes frosting from the windows
- Ventilates while cooling or heating

Operation

Dehumidifying and Heating (in cold climates or when the humidity is high)

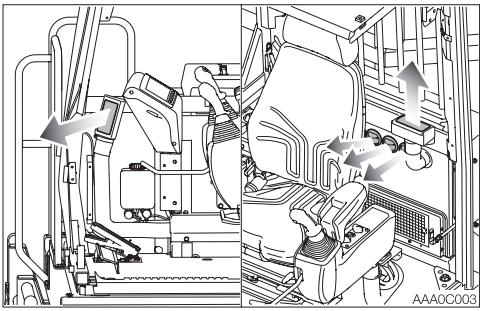

Arrange the foot outlets and the defroster so that they are directed to the front window. Let the dehumidified warm air blow on the front window, to prevent frosting.

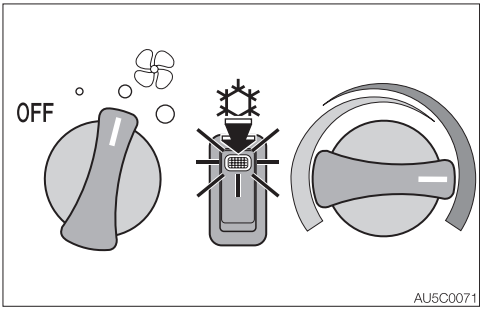

1. Set the desired temperature by turning the temperature control dial to between the center and the right end (HOT).
2. Set the fan dial to the desired position.

Cooling

⚠ CAUTION

- **When the air conditioner is set to the circulation mode, the air in the cab gradually becomes dirty. Switch to the "ventilation" to ventilate once a comfortable temperature is obtained.**
- **Excessive cooling can be harmful to your health. It is best to keep the air inside the cab only about 5 to 6°C (9 to 11°F) cooler than the outside air.**

Note: If the machine has been parked in the sun, open the windows and door to let the hot air out of the cab before using the air conditioner.

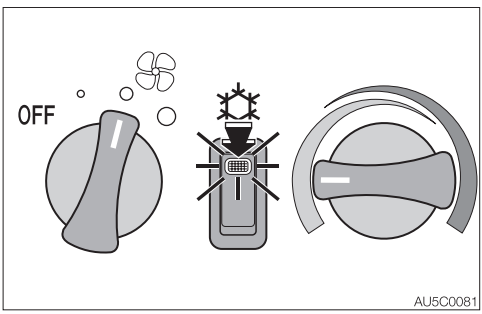

1. Set the fan outlet to the desired position.
2. Set the desired temperature by turning the temperature control dial to between the center and the left end (COOL).
3. Set the fan dial to the desired position.

Quick cooling

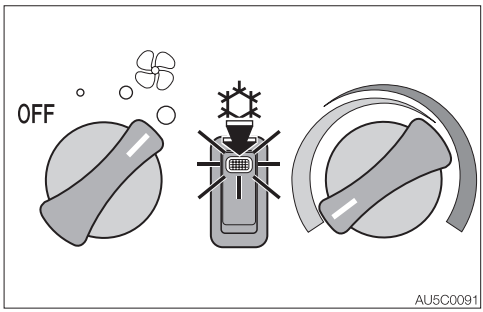

1. Set the fan outlet to the desired position.
2. Set the desired temperature by turning the temperature control dial to between the center and the left end (COOL).
3. Turn the fan dial to "High".
4. Move the Ventilation/Circulation select lever to the right to select "Circulation".

Heating

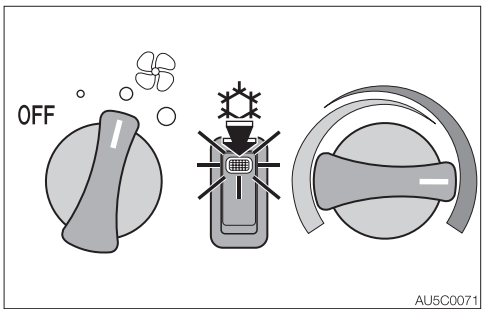

1. Arrange the outlet louvers so that air can be directed to the feet.
2. Set the fan dial to the desired position.
3. Set the desired temperature by turning the temperature control dial to between the center and the right end (HOT).
   For the highest temperature, turn the dial all the way to the right.
4. Turn the fan dial to the OFF position to turn off heating.

Defrosting or defogging the windows
Note: If the air conditioner fan is set to High when using the defroster, the difference between the external and internal temperatures increases, resulting in frost on the outside of the windows. If this happens, either turn off the air conditioner or turn the temperature control dial clockwise to increase the internal temperature.

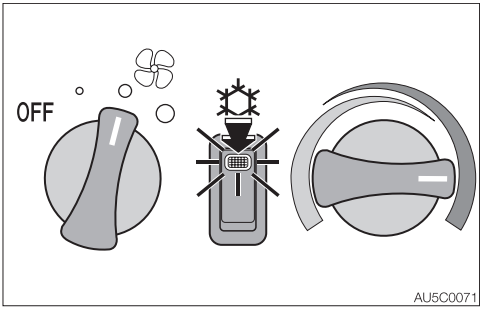

1. Set the desired temperature by turning the temperature control dial to between the center and the right end (HOT).
2. Set the fan dial to the desired position.
3. Move the Ventilation/Circulation select lever to the left to select “Ventilation”.
4. Arrange the foot and defroster outlets so that they are directed to the front window.

HEATER (IF EQUIPPED)

⚠ WARNING

- **Always be sure to allow sufficient ventilation.**
- **Do not place combustible or explosive objects near the air outlets.**

Control panel

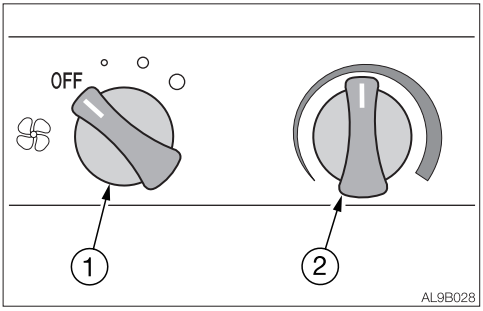

1. Fan dial
2. Temperature control dial

Fan dial

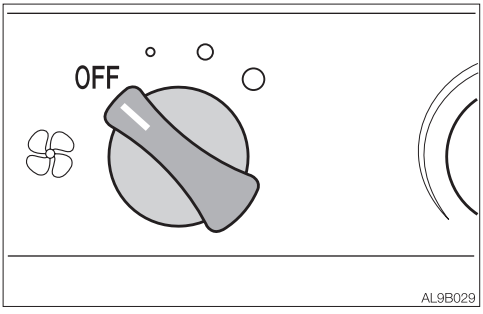

Use this dial to select the fun speed from the three levels.
OFF ....Off
∘ .....Low
○ .....Medium
◯ .....High

Temperature control dial

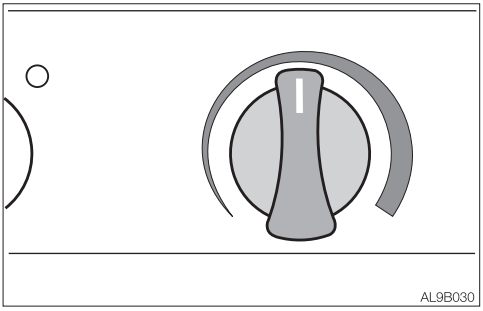

Use this dial to adjust the air temperature.
Counterclockwise
.....Decreases the temperature
Clockwise.....Increases the temperature
Note: No warm air is emitted if the temperature of the engine coolant is low.

Ventilation/Circulation select lever

Refer to “Ventilation/Circulation select lever” on page 2-44.

Outlets

Refer to “Outlets” on page 2-44.

Filters

Clean the filters immediately after operating in dusty places.
If the filters are clogged, the air flow is reduced and a booming sound is heard from the heater unit.
Refer to “Cleaning the air filters (Air conditioner/ Heater)” on page 5-42.

CUP HOLDER

⚠ CAUTION

- **Drinks may be spilled due to vibration when the machine is operating or traveling. Be particularly careful not to burn yourself with hot drinks.**
- **Note that the cigarette lighter or other electric parts may be damaged if drinks are spilled on them.**

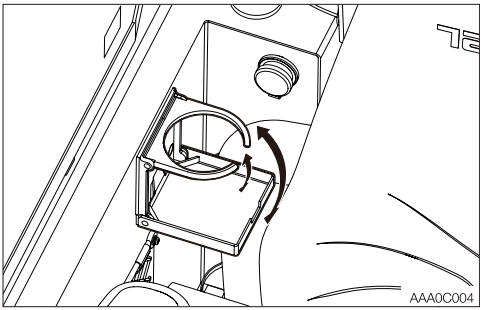

Pull out the cup holder towards you to use it.
Push in the holder for storage after use.

POWER SUPPLY SOCKET

⚠ WARNING

Use only those electric products which comply with the specifications of this socket.

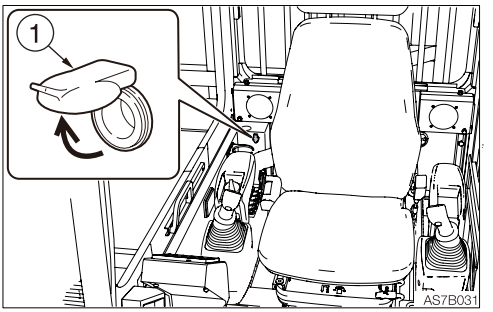

This socket is used to supply power to the devices inside the machine. When using, be careful not to exceed 12 V/ 5A.
To use, open the cap (1).

EXTERNAL POWER SOCKET

⚠ WARNING

Use only those electric products which comply with the specifications of this socket.

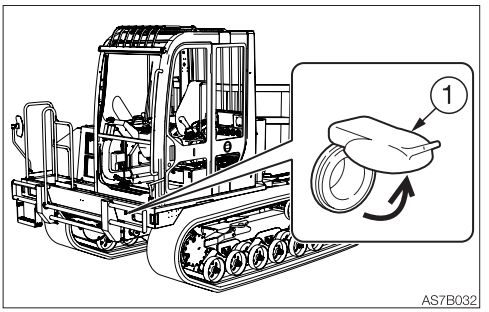

This socket is used to supply power to the devices outside the machine. When using, be careful not to exceed 12 V/ 5A.
After use, pull out the plug and close the cap (1).

INTERIOR LIGHT

IMPORTANT: The battery capacity decreases if the interior light is left on for a long time when the engine is stopped.

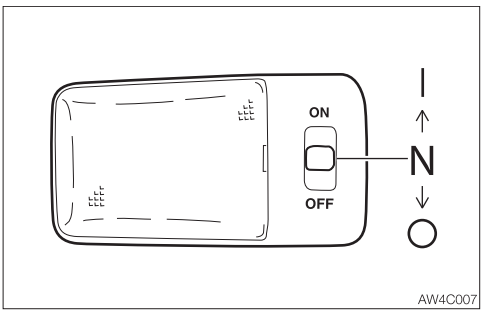

O.....Remains off all the time.
I.....Lights up all the time.

RADIO (DIGITAL AUDIO BROADCASTING NOT SUPPORTED)

The type of radio installed varies depending on the machine.
Check which type of radio is installed and refer to the applicable page.
Refer to “Radio (Digital Audio Broadcasting not supported)” on page 2-50.
Refer to “Radio (Digital Audio Broadcasting supported)” on page 2-62.

CAUTIONS ON USE

- **To ensure safe operation of the machine, always be sure to keep the volume of the radio down to a level where you can easily hear sounds from outside the machine.**
- **Do not use the radio for a long time when the engine is stopped. Doing so will drain the battery and make it difficult or impossible to restart the engine.**
- **Be careful not to allow water or other liquids to come into contact with the radio. Otherwise, it may result in malfunction.**

NAMES OF COMPONENTS

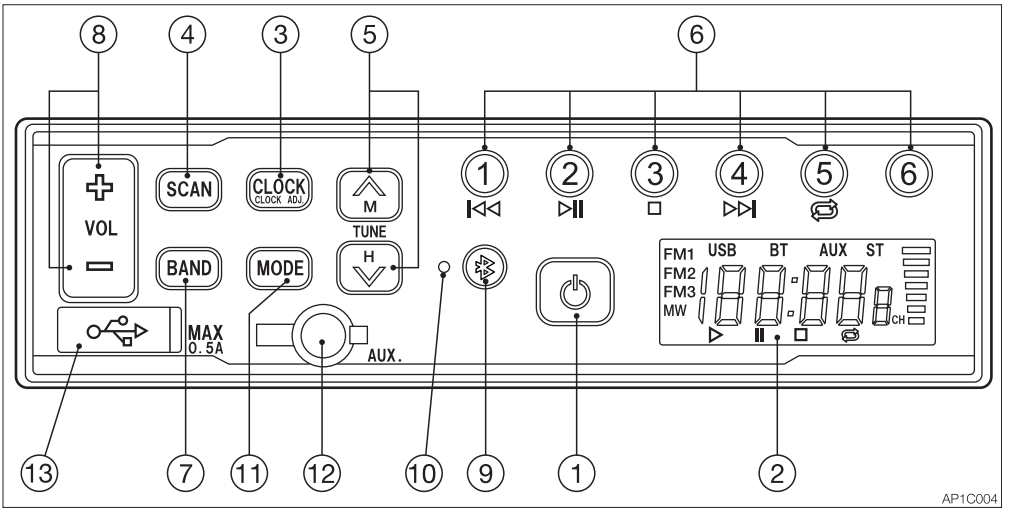

(1) POWER button
Use this button to turn on or off the radio.

(2) LCD
<Home screen>

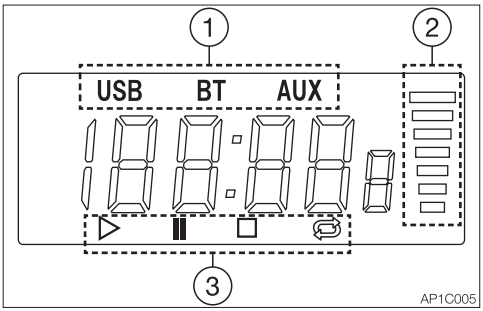

(1) Operation mode
USB: USB audio mode
BT: Bluetooth mode
AUX: Auxiliary in mode
(2) Volume level
(3) Audio control (For USB audio or Bluetooth mode only)

<Radio mode screen>

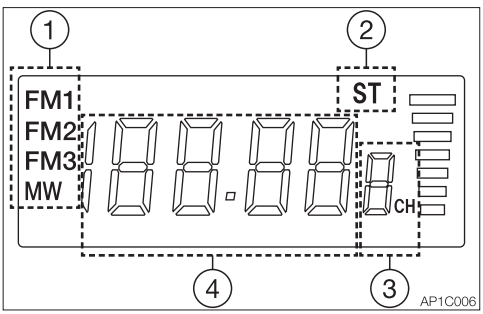

(1) Radio band display
FM1, FM2 FM3: FM band (Six stations can be preset to each band.)
MW: AM band
(2) Stereo display
Turns on when receiving stereo.
(3) Preset station
(4) Display of frequency/clock

Displays the time/the receiving frequency and the operation mode.

(3) Clock button (CLOCK)
Pressing this button changes the display to the clock. Pressing the button again displays the frequency. If the button is not pressed for three seconds, the display returns to the frequency. Pressing and holding the button enters the clock setting mode.

(4) Auto store/Auto seek station (SCAN)
Press this button to automatically assign receivable radio stations to preset buttons (1 to 6).

(5) Tuning button (TUNE ⏶ ⏷)
Press and hold this button (TUNE ⏶ or TUNE ⏷) for two seconds or more to start seeking the receivable stations. The seeking stops when a station is found. To cancel tuning halfway, press the button again.
Pressing the TUNE ⏶ button starts seeking stations with higher frequency.
Pressing the TUNE ⏷ button starts seeking stations with lower frequency.

(6) Preset buttons (1 to 6) (PRESET STATION)
Each button can store three FM stations (FM1, FM2, FM3) and one MW (AM) station.

(7) Band button (BAND)
Pressing this button changes the band from FM1 to FM2, FM3 and MW (AM), in this order.

(8) Volume control button (VOL ✙ ▭)
Press the VOL ✙ button to increase the volume and the VOL ▭ button to decrease the volume.

(9) Bluetooth button (B)
Press this button to connect to the already paired and most recently connected Bluetooth-enabled device.

(10) Bluetooth LED
Lights up when a Bluetooth-enabled device is connected. Flashes while in the pairing standby mode.

(11) Operation mode select button (MODE)
Pressing this button changes the operation mode from FM or MW (AM) to Bluetooth, USB and AUX, in this order.

(12) Auxiliary input jack (AUX)
Open the rubber cap and connect to an earphone jack of a smartphone or portable audio player with a commercially available stereo mini-plug (3.5 mm) cable. Be sure that jack is closed with the rubber cap when not in use.

(13) USB jack
Open the rubber cap and connect to a USB flash drive with a commercially available USB extension cable.
Be sure that jack is closed with the rubber cap when not in use.

Setting the clock

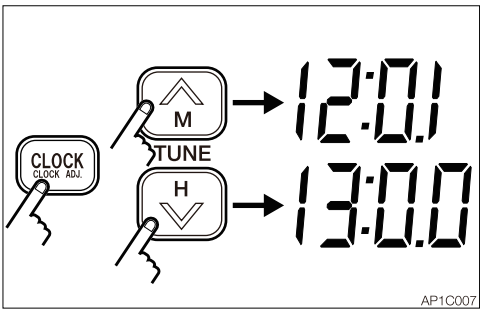

1. Press and hold the CLOCK button for at least two seconds to enter the clock setting mode. (The time display starts flashing.)
2. Use the tune ⏶M button to set the minute. Use the tune ⏷H button to set the hour.
3. Press the CLOCK button again to return to the clock display.

Playing the radio

1. Select the band, FM or MW (AM) by pressing the BAND button.
2. Select the station with the preset button or the tuning button.
3. Adjust the volume with the VOL (− or +) button.

Seeking stations (auto)

Press and hold the TUNE ∧ button for two seconds or one to start seeking stations in the higher frequencies direction. Press and hold the TUNE ∨ button for two seconds or more to start seeking stations in the lower frequencies direction. The radio will stop seeking when it finds a receivable station and start playing.

Manual tuning

Press the TUNE ∧ button to increase the frequency by one step. Press the TUNE ∨ button to decrease the frequency by one step.

Presetting stations

1. Press the BAND button to select a band (MW (AM) or FM), and then select the desired station.
2. To assign the selected station to a preset button, press and hold the button to be assigned for three seconds or more. The number of the preset button appears on the LCD to indicate that it is stored in the preset memory.
3. For more stations to preset, repeat the steps 1 and 2 above.
   - Each preset button (1 to 6) can store three FM stations (FM1, FM2, FM3) and one MW (AM) station.

Auto storing stations (SCAN)

Press the SCAN button while playing the radio. The radio automatically starts seeking the receivable stations in the band currently selected and assign each preset button (1 to 6) a station.

Note: The previous stations stored will be cleared (cancelled) by the auto storing. If the station stored in the preset button is not desirable, try to preset the station manually.

Playing back audio content stored on a USB flash drive

To enter the USB playback mode, first insert the USB flash drive while playing the radio and then press the MODE button. (The LCD changes to the time display and "USB" appears on the LCD.)

When playing back audio content stored on the USB drive, the following operations are available using the buttons (1) to (5).

(1) **Backward (⏮) button**
Moves one track backward and starts playing back from the beginning of it.

(2) **Playback/Pause (⏯) button**
Pauses playback when pressed during playback. When pressed again, starts playback from the point where the playback was paused.

(3) **Stop (⏹) button**
Stops playback when pressed during playback. When the Play/Pause button is pressed, the unit starts playing back the stopped track from the beginning.

(4) **Forward (⏭) button**
Moves one track forward and starts playing back from the beginning of it. Pressing and holding the button will fast forward the current track.

(5) **Repeat (🔁) button**
When pressed during playback, the unit repeats the current track.
To cancel repeating, press the button again.

Notes:

- When in the USB playback mode, do not insert or remove the USB drive.
- ESPERIA makes no warranty that the unit is compatible with every USB storage device.
- To connect the USB flash drive to the unit, use a commercially available USB extension cable.
- Do not connect any device other than a USB flash drive. The USB jack cannot be used to charge a device such as a smartphone.
- Please be advised that ESPERIA bears no responsibility for any damage to or loss of data on the USB drive arising from the use of the unit.

Using the Bluetooth wireless technology

You can use your Bluetooth-enabled mobile phone or audio device by connecting it to the unit.

When a mobile phone is connected, incoming calls will be announced.

Note: Since the unit is not equipped with a microphone, the unit cannot be used for phone calls.

To use the Bluetooth device, certain profiles must be able to interpreted.

The unit is compatible with the following profiles:

Incoming mobile phone call
HFP (Hands-Free Profile)

Bluetooth audio
A2DP (Advanced Audio Profile)
AVRCP (Audio Video Remote Control Profile)
Note: The Bluetooth® word mark and logos are owned by the Bluetooth SIG, Inc. and any use of such marks by ESPERIA is under license.

Pairing a Bluetooth-enabled device
When pairing the unit with a Bluetooth device for the first time, you have to pair with each other.
Once pairing is done, the unit and the paired Bluetooth device can recognize each other.

Note: Before pairing with the unit, turn on the Bluetooth feature on the Bluetooth device. Refer to the instruction manual of the Bluetooth device for further instructions.

1. Press the MODE button to switch to the Bluetooth mode.
2. Turn on the Bluetooth feature on the Bluetooth-enabled device.
3. Press and hold the Bluetooth button until two short beeps are heard, indicating the unit has entered the paring standby mode.
4. Select “CAR RADIO” on the Bluetooth-enabled device.

Note: Only one Bluetooth-enabled device can be paired and used at a time. To use a different device, follow the steps 1 to 4 for pairing again.
Note: At power-up, the unit automatically reconnects to the device most recently connected. When you leave the machine, cancel pairing by pressing and holding the Bluetooth button until two short beeps are heard, to avoid misconnection.

Playing back audio content stored on a Bluetooth-enabled device
When a Bluetooth-enabled device has been paired with the unit, check if the Bluetooth LED is lit, and then press the MODE button to enter the Bluetooth mode.
While the Bluetooth device is connected, the following operations are available using the buttons (1) to (5).

(1) Backward (⏮) button
Starts playing back from the beginning of the track currently playing. Pressing and holding the button will skip backward to the desired track.

(2) Playback/Pause (⏯) button
Pauses playback when pressed during playback. When pressed again, starts playback from the point where the playback was paused.

(3) Stop (⏹) button
Stops the currently playing audio.

(4) Forward (⏭) button
Moves one track forward and starts playing back from the beginning of it.

(5) Repeat (🔁) button
Disabled in the Bluetooth mode.

Note: If no sound is heard from the unit, check to see that the output destination of the music from the Bluetooth device is set to “CAR RADIO”.

Receiving an incoming call on the Bluetooth-enabled device

If a Bluetooth-enabled device has been connected, the unit enters the standby mode and waits for a call. When an incoming call arrives, “CALL” appears on the display, the volume of the car stereo is set to mute and the ringtone is heard from the speaker.

Auxiliary input (AUX)

- Connect a portable audio player and listen to your favorite music.
- Plug a stereo mini plug (3.5 mm) into the AUX-IN jack on the radio.
- Press the MODE button and select “AUX” to switch to the AUX mode. (The “AUX” display appears on the LCD and the frequency display is changed to the time display.)
- To return to the radio, press the MODE button again.
- When connecting, adjust the sound volume level of the audio player so that it is same as that of the radio.
- The sound volume can be adjusted with the volume control buttons on the unit.
- Do not connect a device with a larger output compared with a portable audio player.

Resetting the radio

If there is a problem such as display of incorrect frequency or failure in selecting, reset the unit by pressing the POWER button while pressing the Bluetooth button [B]. (In this case, the preset memory stations and clock are cleared.)

If you cannot reset the unit, please contact your sale or service dealer for help.

SPECIFICATIONS

Power source: .....12/24 VDC (negative ground)
Max. power consumption: .....2 A or less (at max. volume, 24 V)
Max. output power: ..16 W + 16 W (4Ω)
Rated output power: 14 W + 14 W (10% distortion, 4Ω)
Dimensions:.....178 (W) x 50 (H) x 91 (D) mm (without projections)
Receiving frequency: MW (AM) 530 to 1710 kHz (North, Central and South America), 522 to 1629 kHz (Japan, China), 531 to 1602 kHz (Europe)
FM 87.9 to 108 MHz (North, Central and South America), 76 to 95 MHz (Japan), 87.5 to 95 MHz (China, Europe)
Practical sensitivity: ..MW (AM) 20 µV (S/N 20 dB)
FM 3 µV (S/N 30 dB)
S/N ratio:.....FM 50 dB
AUX IN: .....Stereo mini jack (3.5 mm); max. input, 1 V; rated input, 90 mV
Bluetooth standard: ..Ver. 2.1 + EDR
Output:.....Class 2 (max. communication range 10 m)
Receiving frequency: 2.4 to 2.48 GHz
Supported profile:.....HFP V 1.5, A2DP V 1.2, AVRCP V 1.0
USB standard:.....USB 2.0/1.0
Supported file
• MP3: .....MPEG 1/2/2.5 .....Audio Layer 2/3
• WMA: .....Windows Media ™ Audio
Supported format: ....FAT16/FAT32 file system
Max. output power: ..0.5 A

Note: The appearance and specifications are subject to change for improvement without prior notice.

TROUBLESHOOTING

For symptoms not included in the table below or if the problem persists after the proper remedies have been taken, consult your sales or service dealer.

General

Symptoms	Major causes	Remedies
Radio does not operate or the display is inaccurate when the button is pressed.	• CPU malfunction due to noises, etc.	• Reset the unit by referring to "Resetting the radio". Note that once reset, all settings are cleared; set the unit again.

Radio

Symptoms	Major causes	Remedies
Sound is noisy.	• Incorrect frequency for the station	• Tune to the correct frequency for the station.
	• Antenna (pillar antenna) is not extended.	• Be sure to extend the pillar antenna when using the radio.
	• Antenna is not grounded or properly installed.	• Consult your sales or service dealer for help.
	• The antenna is not connected to the power supply	• The power supply must be connected to the antenna with a built-in booster. For details on the connection, contact your sales or service dealer.
Unrealistic frequency is displayed.	• CPU malfunction due to noise, etc.	• Reset the unit by referring to "Resetting the radio". Note that once reset, all settings are cleared; set the unit again.

USB

Symptoms	Major causes	Remedies
No sound is heard.	• The USB flash drive has no MP3/WMA files.	• Write the MP3/WMA files correctly on the USB flash drive.
	• The files on the drive are not MP3/WMA.	• Use the MP3/WMA files properly encoded.
Sound skipping occurs. Noises are heard.	• The MP3/WMA files are not properly encoded.	• Use the MP3/WMA files properly encoded.
A USB device is not recognized.	• The USB flash drive is damaged.	• Replace the USB flash drive with a new one.
	• The USB connector is not properly connected.	• Disconnect the USB connector from the unit, and then reconnect it.
	• The USB flash drive is not formatted to FAT32/16.	• Format the USB flash drive to FAT32/FAT16, and then rewrite the MP3/WMA file. Be sure to back up the files on the drive before formatting it.

Bluetooth

Symptoms	Major causes	Remedies
A Bluetooth device cannot be connected.	• The Bluetooth device is not connected.	• Some Bluetooth devices require longer time for connection and cannot be reconnected automatically. Check if the Bluetooth button is lit. If it does not turn on after a while, re-pair the device by referring to “Pairing a Bluetooth-enabled device”.
	• Another Bluetooth device is connected.	• If another Bluetooth device is connected, re-pair the device by referring to “Pairing a Bluetooth-enabled device”.
A Bluetooth device cannot be remote controlled.	• The AVRCP profile is not connected.	• Remove all Bluetooth devices connected to the Bluetooth-enabled device, and then re-pair the device by referring to “Pairing a Bluetooth-enabled device”.
	• The connection link between the unit and the device may be corrupted.	• Pair the Bluetooth device again with the unit by referring to “Pairing a Bluetooth-enabled device”.
	• AVRCP is not supported	• Check the profiles supported by the Bluetooth-enabled device.

Bluetooth

Symptoms	Major causes	Remedies
No sound is heard from the Bluetooth audio.	• The volume on the Bluetooth-enabled device is too low.	• The volume of the Bluetooth audio playback is dependent on the volume level set on the Bluetooth device Set the volume on the Bluetooth device to a proper level.
	• Output destination of the Bluetooth device is not set to “CAR RADIO”.	• Make sure that the Bluetooth device’s output destination for music, etc. is set to “CAR RADIO”.
Phone function is not available.	• The radio (Digital Audio Broadcasting not supported) does not support phone calls using Bluetooth. Some types of mobile phone may connect to the unit using the call profile.	• Change the microphone setting from the unit to the mobile phone microphone by referring to the instruction manual of the mobile phone being used.
The Bluetooth audio is interrupted after receiving an incoming call.	• Some mobile phones cannot resume the Bluetooth audio after a phone call interruption.	• After the phone call, re-pair the mobile phone with the unit by referring to “Pairing a Bluetooth-enabled device”.

Regional limitation

To use a Bluetooth-equipped radio, “radio wave authentication” must be obtained in the country where the radio is to be used.
It can be used in the countries listed below, as of August 2017. To use it in other countries, please contact your service or sales dealer for assistance.

Countries where a Bluetooth-equipped radio can be used
Ireland, Italy, UK, Estonia, Austria, Holland, Cyprus, Greece, Croatia, Sweden, Spain, Slovakia, Slovenia, Czech, Denmark, Germany, Hungary, Finland, France, Bulgaria, Belgium, Poland, Portugal, Malta, Latvia, Lithuania, Rumania, Luxemburg, Iceland, Norway, Liechtenstein, Switzerland, Turkey, USA, Canada, Japan

RADIO (DIGITAL AUDIO BROADCASTING SUPPORTED)

The type of radio installed varies depending on the machine.
Check which type of radio is installed and refer to the applicable page.
Refer to “Radio (Digital Audio Broadcasting not supported)” on page 2-50.
Refer to “Radio (Digital Audio Broadcasting supported)” on page 2-62.

CAUTIONS ON USE

- **To ensure safe operation of the machine, always be sure to keep the volume of the radio down to a level where you can easily hear sounds from outside the machine.**
- **Do not use the radio for a long time when the engine is stopped. Doing so will drain the battery and make it difficult or impossible to restart the engine.**
- **Be careful not to allow water or other liquids to come into contact with the radio. Otherwise, it may result in malfunction.**

NAMES OF COMPONENTS

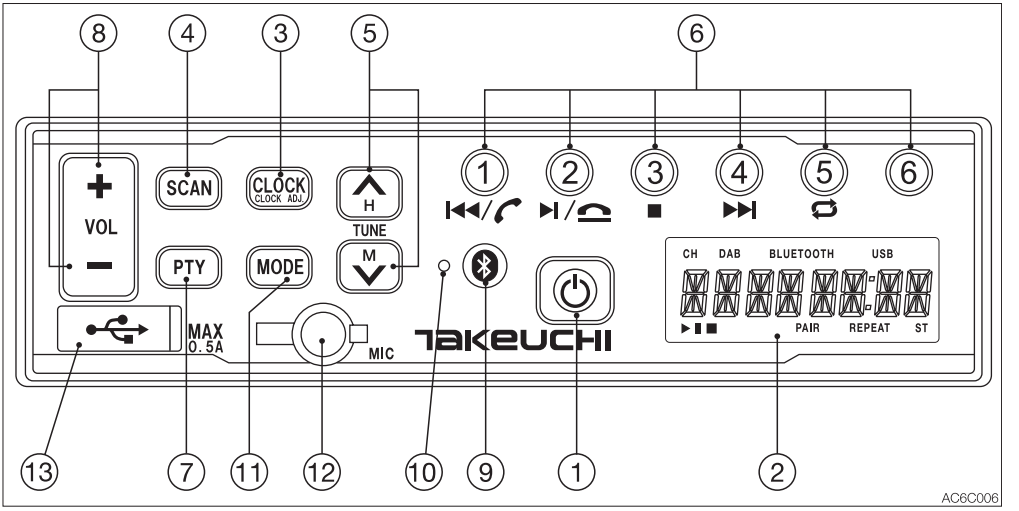

(1) POWER button
Use this button to turn on or off the radio.

(2) LCD
Home screen

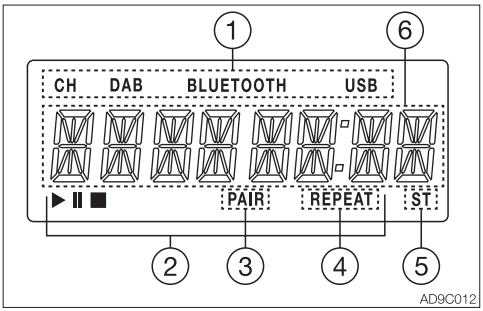

(1) Operation mode
CH: Radio mode
DAB: DAB mode
BLUETOOTH: Bluetooth mode
USB: USB mode
(2) Audio control (for USB or Bluetooth mode only)
(3) Bluetooth paired
(4) Only when the USB mode is set
(5) FM stereo reception
(6) Radio mode, Frequency, Preset Station/ Volume/Clock/Text

(3) Clock button (CLOCK/CLOCK ADJ.)
Press this button while playing the radio to display the clock. Press the button again to display the frequency.
Pressing and holding this button for at least two seconds displays ADJ and makes the time flash on the LCD, indicating that the unit is in the clock adjustment mode.
Press this button in the DAB mode to change the LCD display as follows:
Clock → CH frequency → CH list

(4) Auto store/Auto seek station (SCAN)
Press this button to automatically assign receivable radio stations to preset buttons (1 to 6).

(5) Tuning button (TUNE ⏶ ⏷)
Press and hold this button (TUNE ⏶ or TUNE ⏷) for two seconds or more to start seeking the receivable stations. The seeking stops when a station is found. To cancel tuning halfway, press the button again.
Pressing the TUNE ⏶ button starts seeking stations with higher frequency.
Pressing the TUNE ⏷ button starts seeking stations with lower frequency.

(6) Preset buttons (1 to 6) (PRESET STATION)
One FM and one MW (AM) station can be stored in each button.

(7) Program type button (PTY)
Press the PTY button in the DAB mode to display the currently received service component label, service label and PTY information.
Service component label → Service label → PTY

(8) Volume control button (VOL ✚ ▭)
Press the VOL ✚ button to increase the volume and the VOL ▭ button to decrease the volume.

(9) Bluetooth button (ⓑ)
Press this button to connect to the already paired and most recently connected Bluetooth-enabled device.

(10)Bluetooth LED
Lights up when a Bluetooth device is connected and turns off when disconnected. Flashes while searching for a Bluetooth device.

(11)Operation mode select button (MODE)
Pressing this button changes the operation mode in order: FM → MW (AM) → DAB →Bluetooth → USB.

(12)Microphone input jack (MIC)
Open the rubber cap and connect a commercial microphone (3.5 mm dia.). Be sure to close the jack with the rubber cap when not in use.

(13)USB jack
Open the rubber cap and connect to a USB flash drive with a commercially available USB extension cable.
Be sure to close the jack with the rubber cap when not in use.

Setting the clock

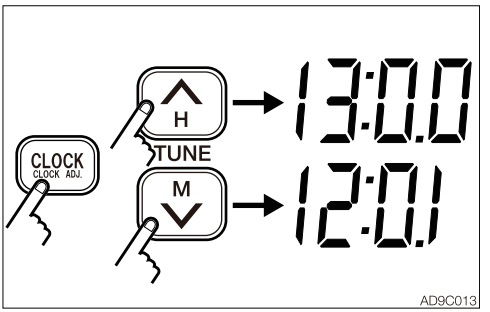

1. Press and hold the clock (CLOCK/CLOCK ADJ.) button for at least two seconds. ADJ appears on the LCD and the time starts flashing to indicate that the unit has entered the clock adjustment mode.
2. Use the [⌃H] button to set the hours and the [⌄M] button to set the minutes.
3. Press the clock (CLOCK/CLOCK ADJ.) button again to return to the clock display (frequency in the radio mode).

Playing DAB/DAB+

Digital audio broadcasting (DAB) is one of the digital radio broadcasting systems available today.
It delivers digital quality sound without annoying interference and signal distortion. It can also transmit text and data.

1. Select DAB by using the MODE button.
2. Press the SCAN button to automatically start seeking receivable stations and assign a station to each preset button (1 to 6).
3. Select the desired station by using any of the buttons: 1 to 6, [⏶] and [⏷].

Clock Display, DAB/DAB+ PTY

Press the PTY button to display the currently received service component label, service label and PTY information. Press the [CLOCK] button to display the clock, CH frequency and CH list.

Playing the radio

1. Select the band, FM or MW (AM) by pressing the MODE button.
2. Select the station with the preset button or the tuning button.
3. Adjust the volume with the VOL (− or +) button.

Seeking stations (auto)

Press and hold the TUNE ⏶ button for two seconds or more to start seeking stations in the higher frequency direction. Press and hold the TUNE ⏷ button for two seconds or more to start seeking stations in the lower frequency direction. The radio will stop seeking when it finds a receivable station and start playing.

Manual tuning

Press the TUNE ⏶ button to increase the frequency by one step. Press the TUNE ⏷ button to decrease the frequency by one step.

Presetting stations

1. Press the MODE button to select a band (MW (AM) or FM), and then select the desired station.
2. To assign the selected station to a preset button, press and hold the button to be assigned for three seconds or more. The number of the preset button appears on the LCD to indicate that it is stored in the preset memory.
3. To preset more stations, repeat steps 1 and 2 above.
   - One FM and one MW (AM) station can be stored in each button.

Auto storing stations (SCAN)

Press the SCAN button while playing the radio. The radio automatically starts seeking the receivable stations in the band currently selected and assigns a station to each preset button (1 to 6).
Note: The previous stations stored will be cleared (cancelled) by the auto storing. If the station stored in a preset button is not wanted, try to preset the station manually.

Playing back audio content stored on a USB flash drive

To enter the USB playback mode, first insert a USB flash drive while playing the radio and then press the MODE button. (The LCD changes to the time display and “USB” appears on the LCD.)

When playing back audio content stored on the USB drive, the following operations are available using buttons (1) to (5).

(1) Backward (⏮) button

Moves one track backward and starts playing it back from the beginning.

(2) Playback/Pause (⏯) button

Pauses playback when pressed during playback. When pressed again, starts playback from the point where the playback was paused.

(3) Stop (⏹) button

Stops playback when pressed during playback. When the Play/Pause button is pressed, the unit starts playing back the stopped track from the beginning.

(4) Forward (⏭) button

Moves one track forward and starts playing it back from the beginning. Pressing and holding the button will fast forward the current track.

(5) Repeat (🔁) button

When pressed during playback, the unit repeats the current track.

To cancel repeating, press the button again.

Notes:

- Do not insert or remove the USB flash drive while in the USB playback mode.
- ESPERIA makes no warranty that the unit is compatible with every USB storage device.
- Use a commercial USB extension cable to connect a USB flash drive to the unit. If you have no extension cable, use a short-type USB flash drive.
- Do not connect any device other than a USB flash drive. The USB jack cannot be used to charge a device such as a smartphone.
- Please note that ESPERIA bears no responsibility for any damage to or loss of data on the USB drive arising from the use of the unit.
- A USB flash drive supports compressed audio formats such as MPEG-1 audio layer 3 (MP3, up to 192 kbps) and Windows Media Audio (WMA).

Using Bluetooth wireless technology

You can use your Bluetooth-enabled mobile phone or audio device by connecting it by Bluetooth to the unit.

When a mobile phone is connected, incoming calls will be announced.

To use a Bluetooth device, certain profiles must be able to be interpreted.

The unit is compatible with the following profiles:

Incoming mobile phone call
HFP (Hands-Free Profile)

Bluetooth audio
A2DP (Advanced Audio Profile)
AVRCP (Audio Video Remote Control Profile)
Note: The Bluetooth® word mark and logos are owned by the Bluetooth SIG, Inc. and any use of such marks by ESPERIA is under license.

Pairing a Bluetooth-enabled device
The unit must be paired with a Bluetooth-enabled device for the first time.
Once pairing is done, the unit and the paired Bluetooth device can recognize each other.
Note: Before pairing with the unit, turn on the Bluetooth feature on the Bluetooth device. Refer to the instruction manual of the Bluetooth device for further instructions.

1. Press the MODE button to switch to the Bluetooth mode.
2. Turn on the Bluetooth feature on the Bluetooth-enabled device.
3. Press and hold the Bluetooth button until two short beeps are heard, indicating the unit has entered the pairing standby mode.
4. Select “CAR RADIO 2” on the Bluetooth-enabled-device.
5. The Bluetooth LED lights up or PAIR appears on the LCD to indicate that the pairing is complete.
6. If the pairing fails, cancel it by pressing and holding the [ⓑ] button until a beep sound is heard, and then pair the device again.

Note: Only one Bluetooth-enabled device can be paired and used at a time. To use a different device, follow steps 1 to 6 for pairing again.
Note: At power-up, the unit automatically reconnects to the device most recently connected. When you leave the machine, cancel pairing by pressing and holding the Bluetooth button until two short beeps are heard, to avoid misconnection.

Playing back audio content stored on a Bluetooth-enabled device
When a Bluetooth-enabled device has been paired with the unit (the Bluetooth LED is lit or PAIR is displayed on the LCD), press the MODE button to enter the Bluetooth mode. When the Bluetooth device is connected, use buttons (1), (2) and (4) to control the playback.

(1) Backward (⏮) button
Starts playing back from the beginning of the track currently playing. Pressing and holding the button will skip backward to the desired track.

(2) Playback/Pause (⏯) button
Pauses playback when pressed during playback. When pressed again, starts playback from the point where the playback was paused.

(4) Forward (⏭) button
Moves one track forward and starts playing it back from the beginning.

Note: The backward, playback and forward operations may not be available depending on the type of your mobile phone.
Note: If no sound is heard from the unit, check that the output destination of the music from the Bluetooth device is set to “CAR RADIO 2”.

Hands-free calling with a Bluetooth-enabled device
If a Bluetooth-enabled device has been connected, the unit enters the standby mode and waits for a call. When an incoming call arrives, “CALL IN” appears on the display, the volume of the car stereo is set to mute and the ringtone is heard from the speaker.

1. Press the start call [ ] button to answer the call.
2. Press the end call [ ] button to end the call.

Note: This unit does not guarantee connectivity between all types of mobile phones.
Note: This unit has no internal microphone for calling; please have your microphone ready.
Note: Depending on the type of mobile phone, it may not be possible to operate the unit when a call arrives, sound may not be heard, or calls may not be available.
Note: After connecting to a mobile phone, calls may not be possible if the phone is set to “Prioritize Bluetooth-enabled device”.
Note: We recommend that you perform a test call before use.

Selecting the reception area
1. Press and hold both the SCAN and the CLOCK/CLOCK ADJ. buttons for at least two seconds.
2. AREA SEL appears on the LCD.
3. Press the preset buttons (1 to 5) to display a different area on the LCD.
4. When the desired area appears, press the preset button 6 to confirm the reception area.

Area	DAB	Preset button
Japan	No	1
USA	No	2
Europe	Yes	3
Asia, Oceania	No	4
Asia, Oceania	Yes	5

Resetting the radio
If you experience problems such as buttons not working or the frequency display being incorrect, reset the unit.
Hold down Bluetooth button ( ) and press POWER button.

Note: In this case the preset memory station, the clock will be cleared.

If the device cannot be reset by the procedure above, reset it forcibly as follows.

1. Turn the starter switch to OFF.
2. Remove the fuse (Fuse No. F7).
   Refer to “Fuse layout and circuits protected” on page 6-8.
3. Wait for 10 seconds, and install the fuse to its initial position.

SPECIFICATIONS

Power source: .....12/24 VDC (negative ground)
Max. power consumption: .....2.0 A (at max. volume, 28.8 VDC)
Max. output power: ..16 W + 16 W (4Ω, 28.8 VDC)
Rated output power: 14 W + 14 W (1 kHz, 10%, 4Ω, 28.8 VDC)
Dimensions:.....178 (W) x 48 (H) x 100 (D) mm
DAB section
Receiving frequency range: .....174.928 to 239.200 MHz
FM section
Receiving frequency range: .....87.5 to 108.0 MHz (EU), 87.9 to 108 MHz (USA)
Usable sensitivity: .....12 dBµV
S/N Ratio:.....60 dB
MW section
Receiving frequency range: .....531 to 1602 kHz (EU), 530 to 1710 kHz (USA)
Usable sensitivity: .....32 dBµV
S/N Ratio:.....40 dB
Bluetooth standard: ..Ver. 5.0
Output:.....Class 2 (max. communication range 10 m)
Supported profiles: ...HFP V. 1.7, A2DP V. 1.3, AVRCP V. 1.6
USB standard:.....USB 2.0/1.0
Folder structure: .....8 levels
Supported files: .....65,545 files

Supported audio formats
- MP3: .....MPEG 1 Audio Layer 3
- WMA: .....Windows Media™ Audio

Supported format: ....FAT16/FAT32 file system
Max. output power: ..DC5V, 0.5 A
Mic-in jack
Size: .....3.5 mm dia.
Output voltage:.....5 VDC

Note: The appearance and specifications are subject to change for improvement without prior notice.

TROUBLESHOOTING

For symptoms not included in the table below or if the problem persists after the proper remedies have been taken, consult your sales or service dealer.

General

Symptoms	Major causes	Remedies
Radio does not operate or the display is inaccurate when the button is pressed.	• CPU malfunction due to noises, etc.	• Reset the unit by referring to “Resetting the radio”. Note that once reset, all settings are cleared; set the unit again.

DAB/DAB+

Symptoms	Major causes	Remedies
DAB/DAB+ is not received.	• The selected service may not be broadcasting.	• Select a service currently broadcasting.

Radio

Symptoms	Major causes	Remedies
Sound is noisy.	• Incorrect frequency for the station	• Tune to the correct frequency for the station.
	• Antenna (pillar antenna) is not extended.	• Be sure to extend the pillar antenna when using the radio.
	• Antenna is not grounded or properly installed.	• Consult your sales or service dealer for help.
	• The antenna is not connected to the power supply	• The power supply must be connected to the antenna with a built-in booster. For details on the connection, contact your sales or service dealer.

Radio

Symptoms	Major causes	Remedies
Unrealistic frequency is displayed.	• CPU malfunction due to noise, etc.	• Reset the unit by referring to "Resetting the radio". Note that once reset, all settings are cleared; set the unit again.

USB

Symptoms	Major causes	Remedies
No sound is heard.	• The USB flash drive has no MP3/WMA files.	• Write the MP3/WMA files correctly on the USB flash drive.
	• The files on the drive are not MP3/WMA.	• Use the MP3/WMA files properly encoded.
Sound skipping occurs. Noises are heard.	• The MP3/WMA files are not properly encoded.	• Use the MP3/WMA files properly encoded.
A USB device is not recognized.	• The USB flash drive is damaged.	• Replace the USB flash drive with a new one.
	• The USB connector is not properly connected.	• Disconnect the USB connector from the unit, and then reconnect it.
	• The USB flash drive is not formatted to FAT32/16.	• Format the USB flash drive to FAT32/FAT16, and then rewrite the MP3/WMA file. Be sure to back up the files on the drive before formatting it.

Bluetooth

Symptoms	Major causes	Remedies
A Bluetooth device cannot be connected.	• The Bluetooth device is not connected.	• Some Bluetooth devices require longer time for connection and cannot be reconnected automatically. Check if the Bluetooth button is lit. If it does not turn on after a while, re-pair the device by referring to “Pairing a Bluetooth-enabled device”.
	• Another Bluetooth device is connected.	• If another Bluetooth device is connected, re-pair the device by referring to “Pairing a Bluetooth-enabled device”.
A Bluetooth device cannot be remote controlled.	• The AVRCP profile is not connected.	• Remove all Bluetooth devices connected to the Bluetooth-enabled device, and then re-pair the device by referring to “Pairing a Bluetooth-enabled device”.
	• The connection link between the unit and the device may be corrupted.	• Pair the Bluetooth device again with the unit by referring to “Pairing a Bluetooth-enabled device”.
	• AVRCP is not supported	• Check the profiles supported by the Bluetooth-enabled device.

Bluetooth

Symptoms	Major causes	Remedies
No sound is heard from the Bluetooth audio.	• The volume on the Bluetooth-enabled device is too low.	• The volume of the Bluetooth audio playback is dependent on the volume level set on the Bluetooth device. Set the volume on the Bluetooth device to a proper level.
	• Output destination of the Bluetooth device is not set to “CAR RADIO 2”.	• Make sure that the Bluetooth device’s output destination for music, etc. is set to “CAR RADIO 2”.
The Bluetooth audio is interrupted after receiving an incoming call.	• Some mobile phones cannot resume the Bluetooth audio after a phone call interruption.	• After the phone call, re-pair the mobile phone with the unit by referring to “Pairing a Bluetooth-enabled device”.

Regional limitation

To use a Bluetooth-equipped radio, “radio wave authentication” must be obtained in the country where the radio is to be used.
It can be used in the countries listed below, as of August 2017. To use it in other countries, please contact your service or sales dealer for assistance.

Countries where a Bluetooth-equipped radio can be used
Ireland, Italy, UK, Estonia, Austria, Holland, Cyprus, Greece, Croatia, Sweden, Spain, Slovakia, Slovenia, Czech, Denmark, Germany, Hungary, Finland, France, Bulgaria, Belgium, Poland, Portugal, Malta, Latvia, Lithuania, Rumania, Luxemburg, Iceland, Norway, Liechtenstein, Switzerland, Turkey, USA, Canada, Japan

FUEL SUPPLY PUMP (IF EQUIPPED)

⚠ DANGER

Do not use the fuel supply pump for gasoline or hydraulic oil. Doing so could result in explosion or damage.
Only use the fuel supply pump for diesel fuel.

⚠ CAUTION

Do not fill the tank with additional fuel after the fuel supply pump stops. Doing so could cause the fuel to spurt out.

This device automatically supplies fuel to the fuel tank and stops automatically when the fuel tank is full.

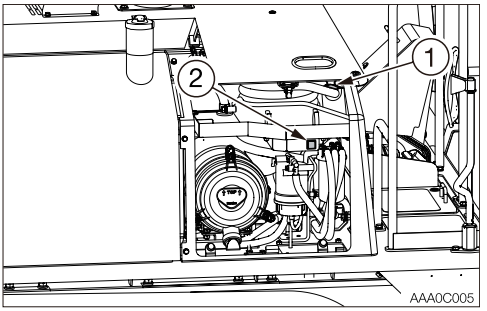

1. Open the side cover.
2. Insert the pump's nozzle (1) in the fuel supply tank.
3. Press the switch (2).
   The pump stops automatically once the fuel tank is full.

Note: To stop filling at a desired level, press the switch (2).

4. Store the nozzle.

REAR LIGHT (IF EQUIPPED)

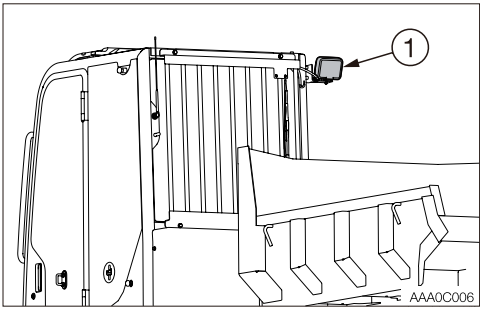

The working light switch is also changed.

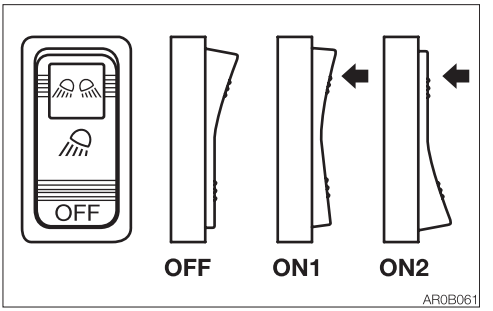

OFF ....Off
ON1 ...The front light and the switch lamp are turned on.
ON2 ...The front light, rear light (1) and the switch lamp are turned on.

MIRRORS

⚠ WARNING

Adjust the mirrors before operating the machine.
If the visibility is poor, death or serious injury could result.

The mirror can be adjusted by moving it by hand. If it is too hard to move by hand or too loose, use a tool to adjust it. Set the machine to the travel posture, and then adjust the mirrors by following the instructions in this manual.

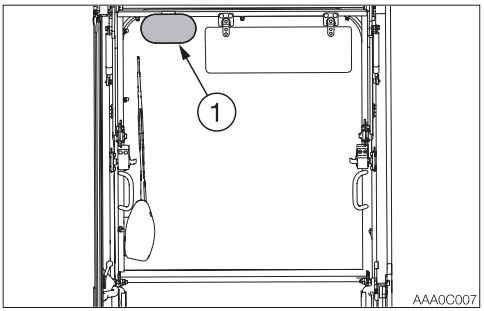

- Adjust the mirrors (1) so that you can see the view behind the machine.

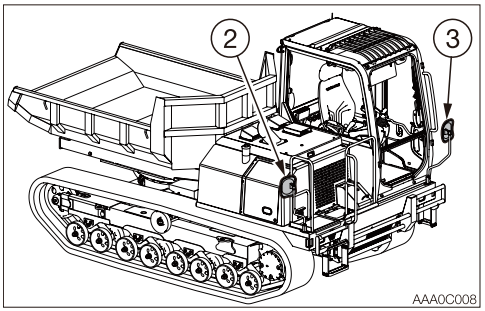

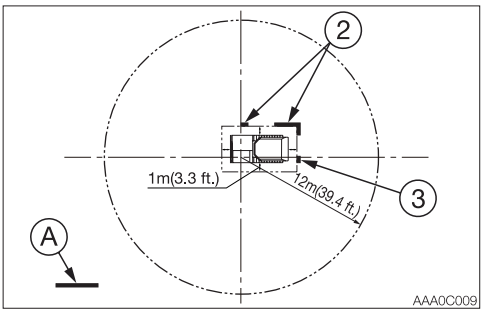

A: The blind spot area, 1 meter (3.3 ft.) away from the machine.

- Adjust the mirrors (2) and (3) so that you can see the view of the portion obstructed by the dump body: the rear side portion 1 meter (3.3 ft.) away from the machine.

CAMERA

⚠ WARNING

Adjust the cameras before operating the machine.
If the visibility is poor, death or serious injury could result.

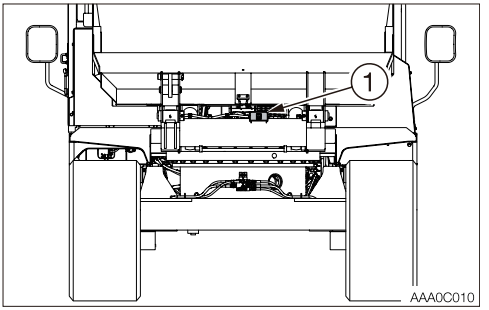

The images being taken by the camera (1) can be shown on the multi information display. While operating the machine, use the camera (1) to check the blind spots from the operator's seat.
Refer to "Camera image key" on pages 2-25.
If the images are not correctly displayed, adjust the camera installation angle.

Adjusting the installation angle

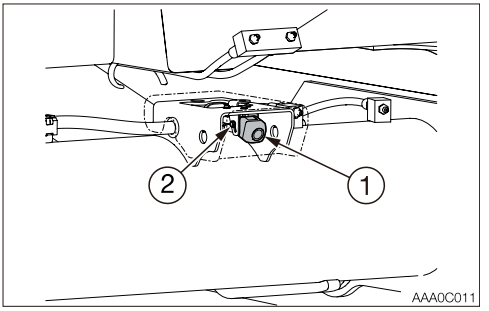

1. Loosen the right and left bolts (2) securing the camera (1).
2. Adjust the angle while checking the screen.
3. Tighten the right and left bolts (2) evenly.
   · Tightening torque: 0.5 N·m (0.4 ft-lb.)

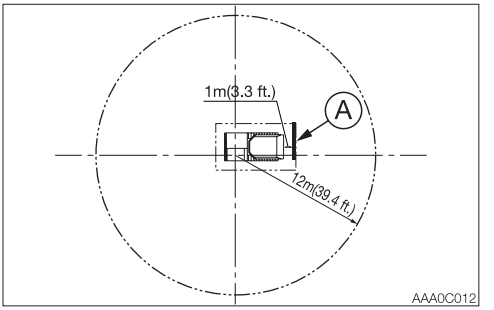

4. Check if the images are shown on the multi-information display.
   A: The blind spot area, 1 meter (3.3 ft.) away from the machine.
   If the blind spot area A is not shown after adjustment, contact your service or sales dealer for assistance.

AUTO CAMERA MODE

When the machine is driven in reverse, the display is automatically switched to the camera screen. When the machine stops driving in reverse, the display returns to the Home screen.
This function can be manually turned on or off. For setting the auto camera, refer to “ON/OFF setting” on page 2-27.

OPERATION



BEFORE STARTING OPERATION

GETTING ON OR OFF THE MACHINE

⚠ WARNING

- **Do not jump on or down from the machine. Never attempt to get on or off the moving machine.**
- **When getting on or off the cab, first fully open the door to the locked position and check that it does not move.**

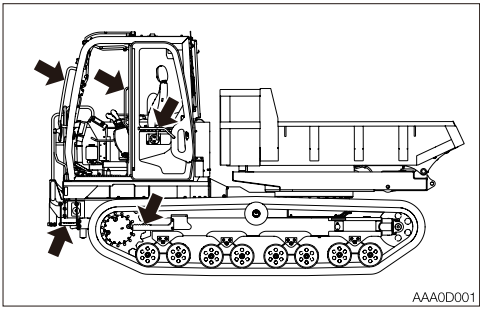

- **Climb up/down the steps holding the handrail to support your weight in a three point secure stance (hand and feet).**
- **Never use the safety lock lever or control levers as hand holds.**

WALK-AROUND INSPECTION

Perform the walk-around inspections once a day before starting the engine for the first time that day.
Refer to “MAINTENANCE, Walk-around inspection”, on pages 5-16 and 5-17.

DAILY INSPECTION

Perform the daily inspections once a day before starting the engine for the first time.
Refer to “MAINTENANCE, Daily inspection”, on pages 5-18 to 5-26.

STARTING AND STOPPING THE ENGINE

BEFORE STARTING THE ENGINE

1. Adjust the seat for a comfortable operating position.
2. Fasten the seat belt.

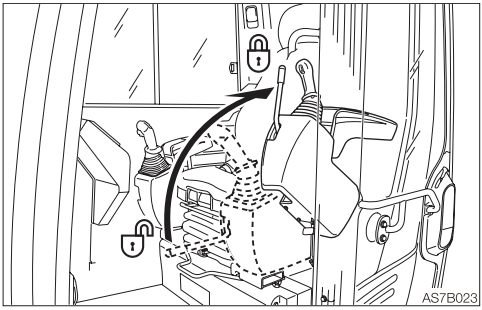

3. Check that the safety lock lever is in the locked position.

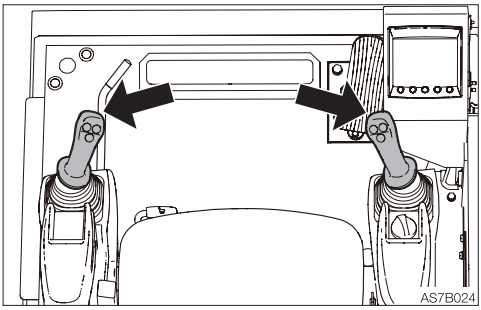

4. Check that the control levers are in the neutral position.

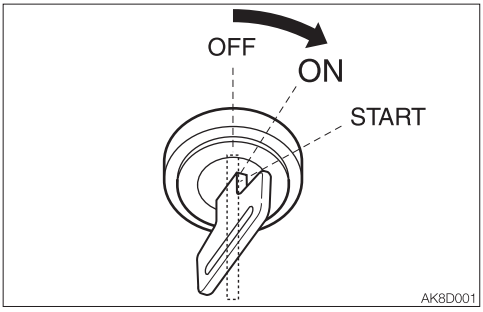

5. Insert the key into the ignition switch, turn it to the ON position, then perform the following inspections:

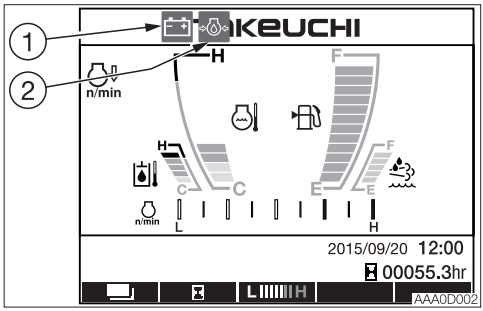

- Check to see if only the battery charge warning lamp (1) and the engine oil pressure warning lamp (2) are flashing.
- Turn the light switch to check that the front light, rear light and meter light turn on.
- Operate the turn signal buttons and check if the turn signal lights flash and an alarm sounds.
- Press the horn button to check that the horn sounds
- Check the fuel level.
- Check the amount of DEF/AdBlue® solution remaining.

If a lamp does not light or the alarm is not sounded, the bulb may be burnt out or a wire may be damaged. Ask a Takeuchi service agent for repair.

STARTING THE ENGINE

⚠ WARNING

- **Clear all personnel from the work area.**
- **Sound the horn to warn people around the machine.**

IMPORTANT: Do not run the starter motor for more than 15 consecutive seconds. If the engine fails to start, wait for 30 seconds, and then try again to start the engine.
IMPORTANT: If the engine stalls due to fuel shortage, add fuel, turn the key to the ON position for 60 seconds, and then turn it to the START position. Running the starter for a long time before there is enough fuel is going through can cause the starter to fail.

Normal starting

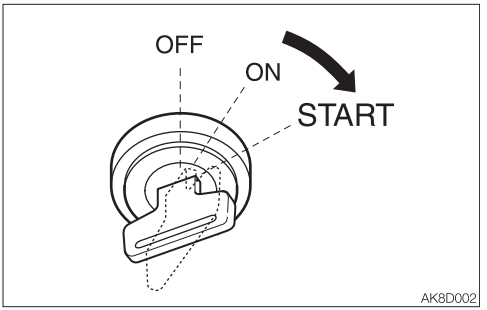

1. Turn the ignition key to the START position and start the engine.
   The engine does not start unless the safety lock lever is in the locked position at this point.
   Refer to “Safety lock lever” on page 2-39.
2. Once the engine starts, release the key.
   The key automatically returns to the ON position.
3. Check that the warning lamps are off.
   For safety reasons, it is designed that the deceleration function is activated to set the engine revolutions to low idling whenever the engine is started.
   Cancel the deceleration mode by pressing the deceleration button as necessary.
4. Warm up the engine.
   Refer to “Warming up the engine” on page 3-5.
5. After the completion of the warming up, press the deceleration button to cancel the deceleration mode.

Starting in cold climates

⚠ WARNING

Never use starting fluid on this engine, as the starting fluid could cause an explosion.

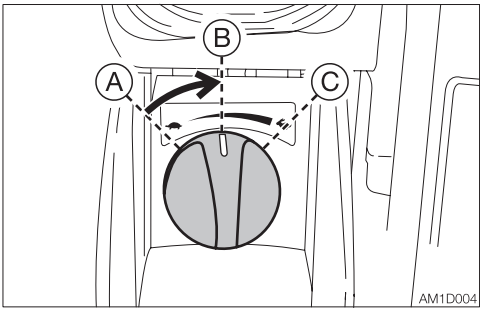

1. Turn the throttle controller to the middle position.

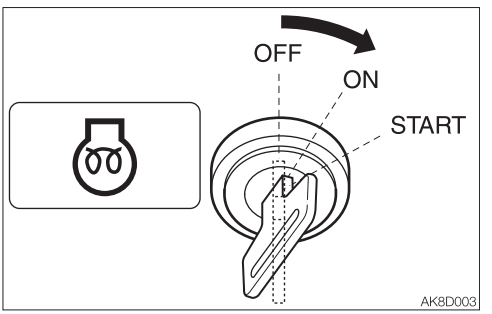

2. Turn the ignition key to the ON position, and confirm that the glow lamp is on. (The glow lamp stays lit for 15 seconds when the coolant temperature is –10°C (14°F).)
3. After the glow lamp goes out, press the deceleration button (to cancel the deceleration mode), and then turn the key to the START position to start the engine.
   The engine does not start unless the safety lock lever is in the locked position at this point.
   Refer to “Safety lock lever” on page 2-39.

4. Once the engine starts, release the key. The key automatically returns to the ON position.
5. Check that the warning lamps are off.
6. Return the throttle controller to the original position and warm up the engine. Refer to “Warming up the engine”.

Note: If the engine is started at –15°C (5°F), the revolution speed is controlled to 1500 min-1 (rpm). After 10 seconds, the throttle controller operation becomes available.
Note: The glow lamp turns on if the coolant temperature is low after the engine is started.

WARMING UP THE ENGINE

IMPORTANT: Do not accelerate the engine and run it without load until the engine warm up is complete.
Do not warm up the engine for a long time (20 minutes or more). When idling is required, occasionally place a load or run the engine at medium speed.

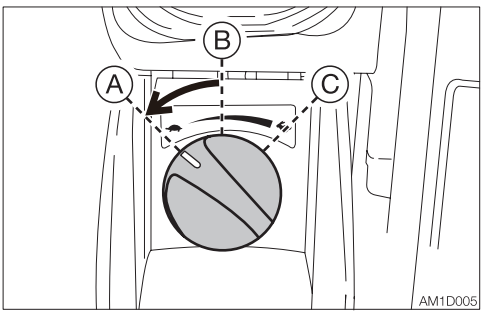

1. Return the throttle controller, and then run at a low idle with no load for 5 minutes.

STOPPING THE ENGINE

IMPORTANT: Do not stop the engine suddenly when operating with heavy loads or at the maximum speed. Doing so may cause the engine to overheat or seize. Never stop running the engine suddenly except in emergency.
IMPORTANT: The SCR system operates for up to 10 minutes after the ignition switch is turned to the OFF position. When removing the batteries or electrical connectors for inspection or maintenance, wait for at least 10 minutes after the ignition switch is turned to the OFF position. Otherwise, the system could fail.

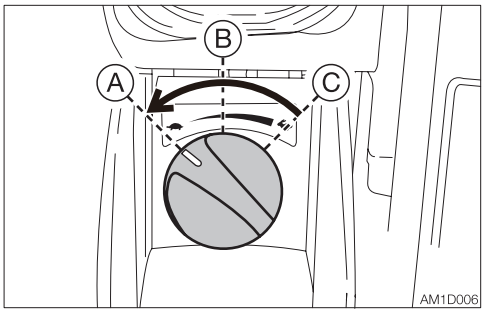

1. Return the throttle controller.
2. Idle the engine for about 5 minutes to gradually let it cool.

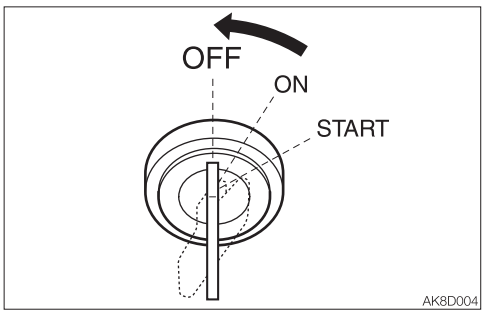

3. Turn the ignition key to the OFF position to stop the engine.

OPERATING THE MACHINE

LEVER PATTERN

⚠ WARNING

Before starting operation, be sure to check which lever pattern you are going to use.

This manual explains the operation by using the pattern described below.

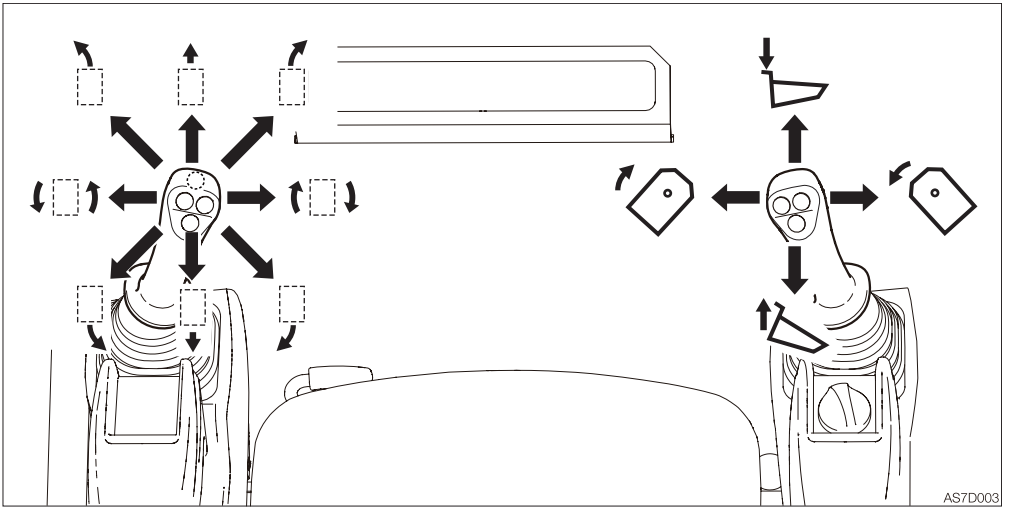

	Travel Forward
	Travel Reverse
	Left Spin Turn
	Right Spin Turn
	Left Pivot Turn
	Right Pivot Turn
	Right Pivot Turn Reverse
	Left Pivot Turn Reverse

	Dump body lower
	Dump body raise
	Dump body left swing
	Dump body right swing

MEMO

WARMING UP THE MACHINE (HYDRAULIC OIL)

⚠ WARNING

Operating the working equipment without warming up the machine (hydraulic oil) is dangerous, as the working equipment cannot response to controls quickly or may move in unexpected ways, and the safety devices may not operate properly. Be sure to sufficiently warm up the machine.

IMPORTANT: Do not operate the levers too quickly when the hydraulic oil temperature is below 20°C (68°F). The proper hydraulic oil temperature during operation is 50 to 80°C (122 to 176°F). If operations must be performed at lower temperatures, heat up the hydraulic oil to at least 20°C (68°F).

Normal warm-up

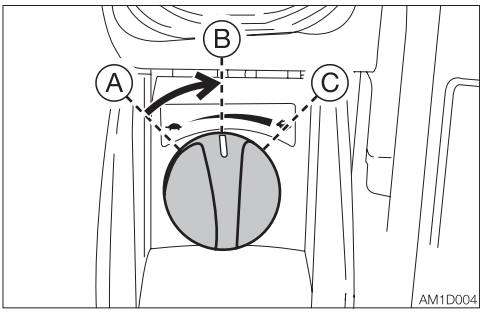

1. Turn the throttle controller to the middle position, and then run the engine at medium speed for about 5 minutes with no load.

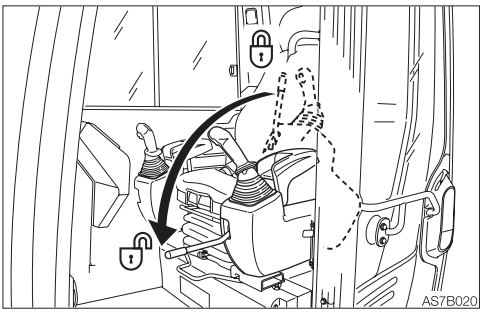

2. Fully lower the safety lock lever to the unlock position.

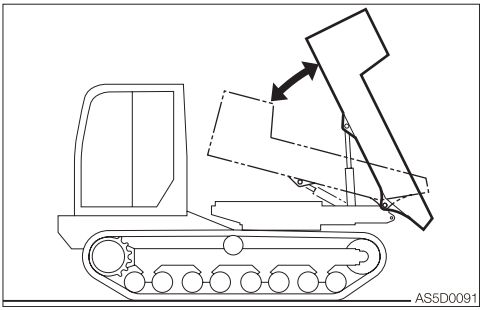

3. Extend and retract the dump cylinders slowly several times with no load.

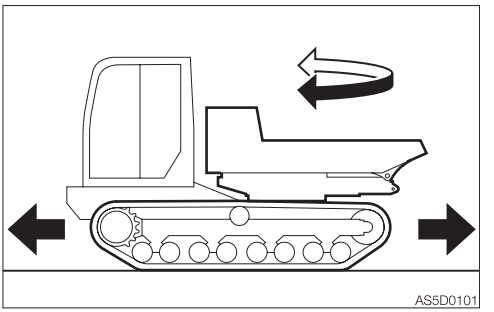

4. Slowly swing the dump body to the left and right.
5. Travel slowly forward and in reverse several times.

Warm-up in cold climates

1. Perform the normal warm-up procedure.

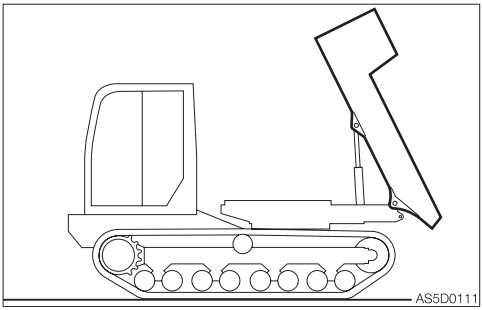

2. Set the dump cylinders at the stroke end and keep it there.
   Do not keep this condition for more than 30 seconds.
3. Repeat the step 2 until the dump body operating speed becomes normal.

INSPECTION AFTER WARM-UP

After warming up the engine and machine (hydraulic oil), perform the checks and inspections described below, and repair if necessary.

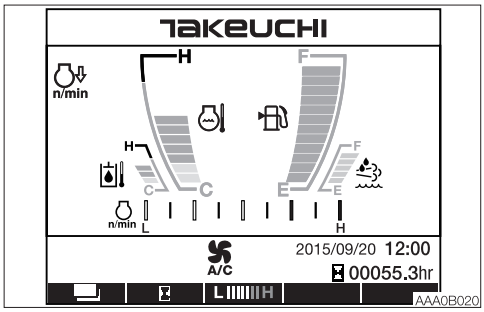

1. Check that the warning lamps and meters are as follows:
   · Are all warning lamps off?
   · Is the water temperature level within the green range?
   · Is the hydraulic oil temperature level within the green range?
2. Check that there are no irregularities in the exhaust color, sound and vibrations.

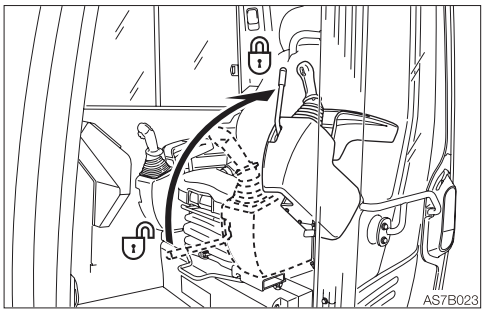

3. Raise the safety lock lever to the lock position, and then check that the control levers are locked.

TRAVELING THE MACHINE

⚠ WARNING

- Never allow anyone to enter the machine's swing radius and path.
- Signal your intention to move by sounding the horn.
- Do not travel while the dump body is being swung or raised. Doing so is dangerous because it causes the machine to become unstable. Fully lower the dump body and make it parallel to the main frame.
- Avoid sudden starting, stopping and turning. Otherwise, the loaded material could be shifted to cause the machine to lose its balance, or the structures in the surrounding area could be damaged by the material fallen from the dump body.
- Do not raise the safety lock lever while traveling. Doing so is dangerous; the parking brake will be activated and the machine will stop abruptly.
- Do not switch off the ignition switch while traveling. Doing so is dangerous; the machine will stop abruptly.
- Before traveling in reverse, visually check if the rear view is clear. Failure to do so could result in contact with a worker or obstacle.
- When hauling materials or when traveling over rough terrain or slippery road surface, slow down the travel speed and drive carefully.
- Avoid crossing over obstacles whenever possible. If you must do so, try to go over the obstacle at a right angle to it at a low speed. Never cross obstacles which will tilt the machine to an angle of 10° or greater.
- Clear all obstacles from the path of the machine.

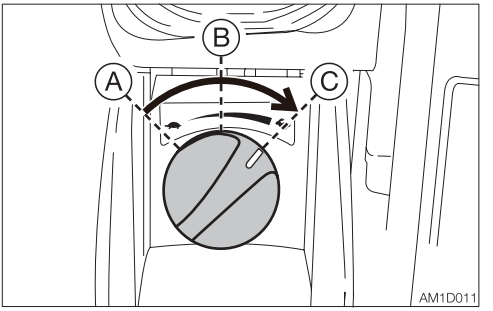

1. Turn the throttle controller and increase the engine speed.

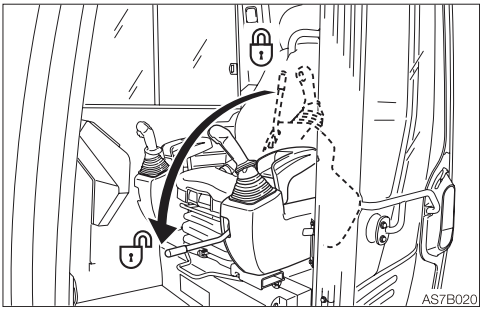

2. Fully lower the safety lock lever to the unlock position.

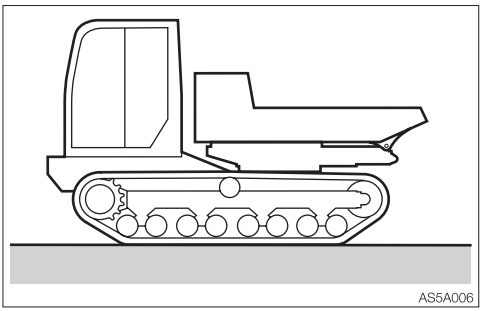

3. Fully lower the dump body and make it parallel to the main frame.

Moving the machine forward and backward

1. Operate the left control lever as below.

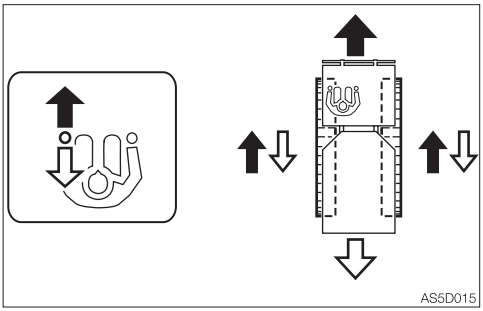

➡ To move forward:
Push the left control lever forward.

⇨ To move backward:
Pull the left control lever backward.

Traveling in 2nd (High) speed

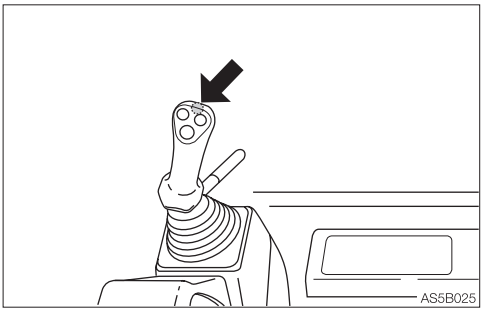

Press the travel speed button on the left control lever to switch to 2nd (high) speed, and press it again to return to 1st (low) speed.

Left turn

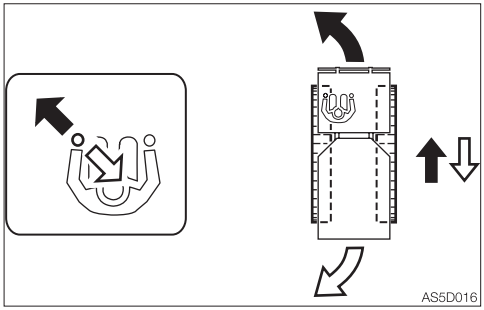

Turning to the left:

➡ To turn forward to the left:
Tilt the left control lever forward to the left

⇨ To turn backward to the left:
Tilt the left control lever backward to the right

Right turn

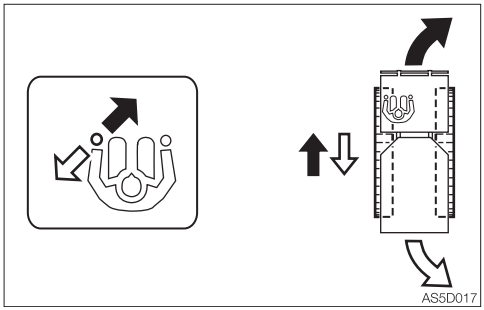

Turning to the right:

➡ To turn forward to the right:
Tilt the left control lever forward to the right

⇨ To turn backward to the right:
Tilt the left control lever backward to the left

Spin turn

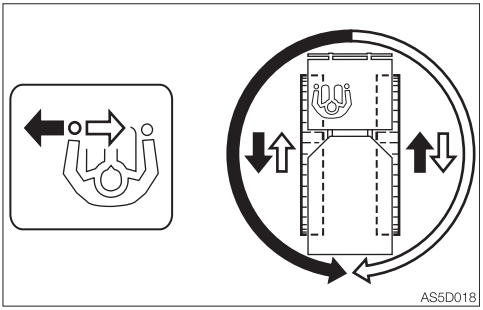

➡ To spin left:
Tilt the left control lever to the left.

⇨ To spin right:
Tilt the left control lever to the right.

STOPPING TRAVEL

⚠ WARNING

- **Park the machine on a flat, rigid and safe ground. Set the parking brake. If you must park on a slope, chock the tracks to block the machine.**
- **Before standing up from the operator's seat, raise the safety lock lever to engage the lock. If any controls are accidentally touched when the safety lock lever is not locked, the machine will suddenly move and cause serious injury or death.**

⚠ CAUTION

Never stop running the machine suddenly except in emergency. Stop in good time, if possible.

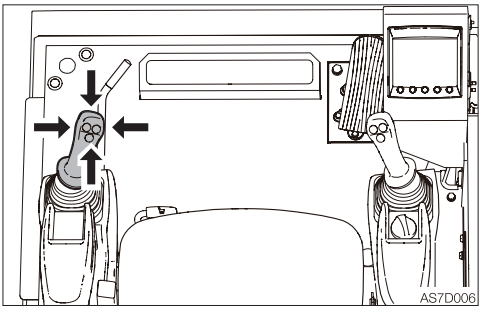

1. Set the left control lever slowly to the neutral position. The machine stops. Braking is automatically applied by the hydrostatic drive system when the left control lever is returned to the neutral position. Full braking is achieved when the safety lock lever is raised

OPERATING THE DUMP BODY

⚠ WARNING

- **Before starting operation, be sure to check which lever pattern you are going to use.**
- **Before operating the dump body, check that the surrounding area of the machine is safe and clear.**
- **Do not travel while the dump body is being swung or raised. Doing so is dangerous because it causes the machine to become unstable. Fully lower the dump body and make it parallel to the main frame.**

Use the right control lever to operate the dump body.
Return the right control lever to the neutral position to stop the dump body.

1. Lower the safety lock lever to the unlock position.

Operating the dump body swing

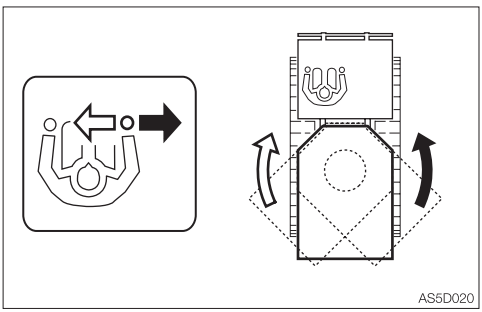

➡ To swing left:
Tilt the right control lever to the right
⇨ To swing right:
Tilt the right control lever to the left.

Dump body operation

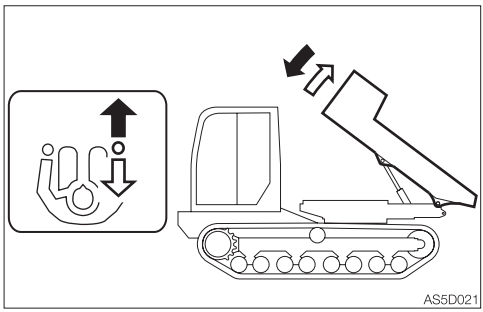

➡ To lower the dump body:
Push the right control lever forward.
⇨ To raise (dump) the dump body:
Pull the right control lever backward.

OPERATING PROCEDURES

CAUTIONS ON OPERATING

Cautions on traveling

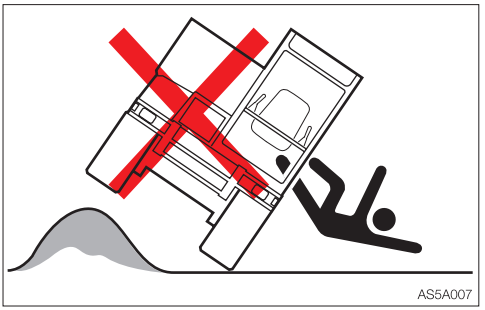

Traveling over obstacles (rocks, stumps, etc.) may put a great load on the machine body and may cause damage to it. Avoid crossing over obstacles whenever possible. If you must do so, travel at a low speed and go over the obstacle at the center of the track.

Cautions on traveling in 2nd (High) speed

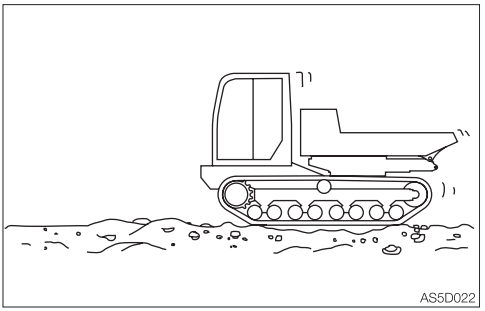

On uneven ground, maintain the low speed and avoid starting, stopping or changing directions abruptly.

Precautions when loading material

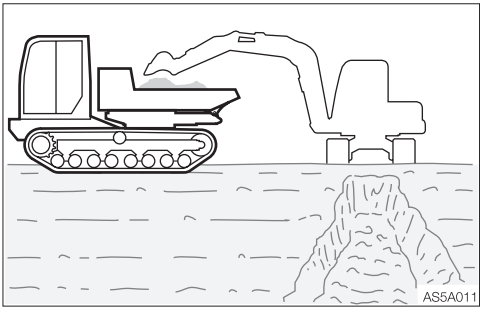

When loading earth or sand, make sure that the machine operator is safe. Do not load material on slopes. Do it only on a firm ground.
Improper loading is dangerous, as it could cause the machine to tip over or result in the load shifting.

- Do not exceed the maximum loading capacity (3700 kg, 8155 lb).
- Load the material so that it is evenly distributed in the dump body.
- Be sure to properly secure the unstable load onto the dump body.

Precautions when dumping

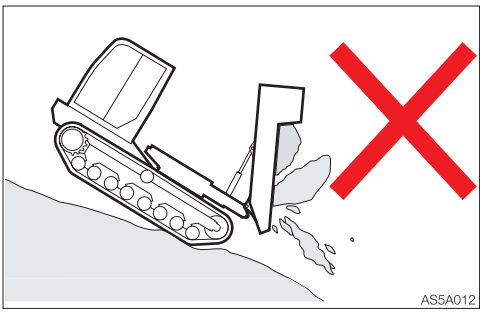

Do not perform the following dumping operations. The machine may tip over due to the shift of the center of gravity.

- Dumping on slopes or bumpy terrain
- Dumping while swing the dump body
- Dumping while traveling

PRECAUTIONS ON USING THE MACHINE IN WATER

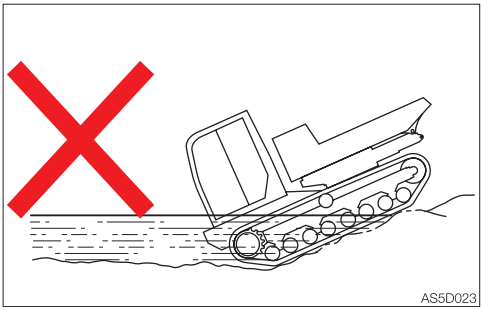

- If the front of the machine is submerged in water as shown in the figure above, it could cause the radiator fan to turn in water, resulting in damage to the fan. The front of the machine must not be submerged.

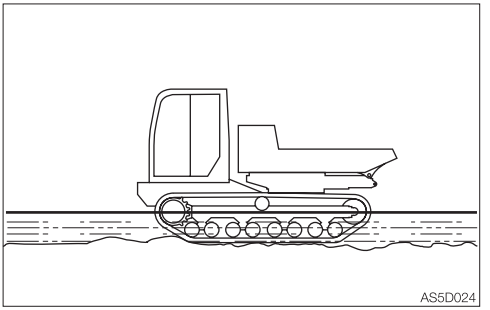

- Allowable water depth
  Use the machine in water only when the water is up to the middle of the travel reduction gear case.
- For those parts used in water for a long time, apply enough grease until the old grease is expelled.
- Never submerge the swing bearing or main frame in water or sand. If submerged, contact a Takeuchi service agent for inspection.

PRECAUTIONS WHEN TRAVELING ON SLOPES

⚠ WARNING

When traveling on slopes, do it carefully so that the machine does not tip (roll) over or slide.
When traveling on slopes of 15 degrees or more, position the heavier end of the machine (front or back, whichever is heavier) pointing up the slope.

- Never travel on slopes that are too steep for the machine to maintain its stability (maximum gradeability: 30°, lateral tipping angle: 10°). Note that in reality, the machine's stability becomes lower than the above values depending on the working condition.
- When traveling on slopes or grades, drive slowly in 1st (low) speed. Especially on down slopes, slow down the engine speed and limit the stroke length of the left control lever to less than half. Going down a slope at high speed may lead to loss of control.
- Braking abruptly on slopes could result in the machine losing its balance and tipping over.

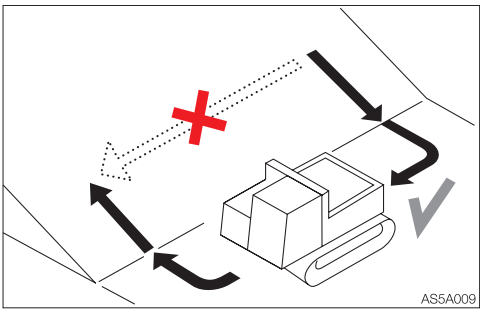

- Do not change directions on slopes or traverse slopes. First return to a flat surface, and then take an alternative path.
- The machine may slip sideways even on a slight slope if the ground is covered with grass or dead leaves, or when traveling on a wet metal plate or frozen surfaces. Make sure the machine is never positioned sideways on slopes.
- If the machine is stalled on the slope, return each control lever to the neutral position before restarting the engine.

Traveling posture on slopes

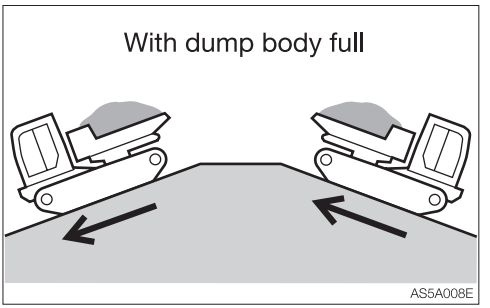

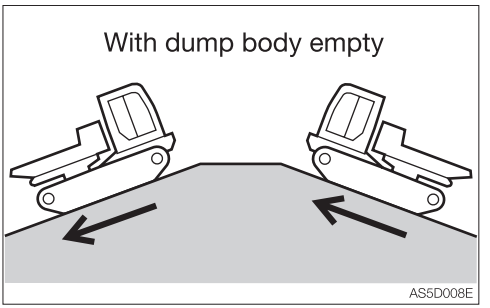

Braking when descending slopes

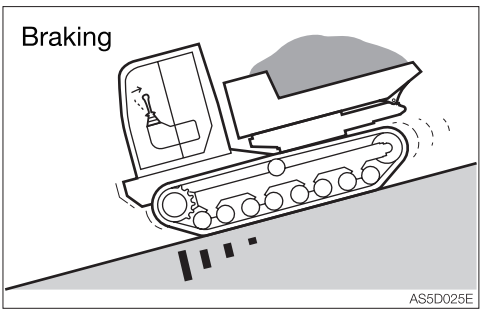

When descending slopes, the brakes are applied automatically once the left control lever is returned to the neutral position.

If the engine stops

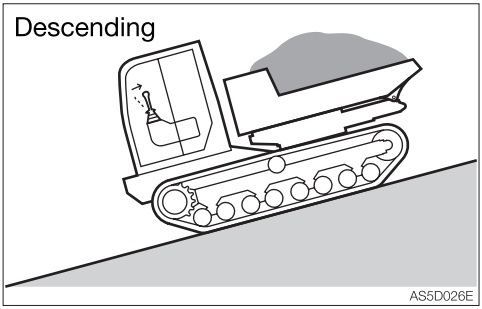

If the engine stops when descending a slope, set the left control lever to the neutral position, stop the machine, then start the engine.

Do not open the door while traveling on slopes

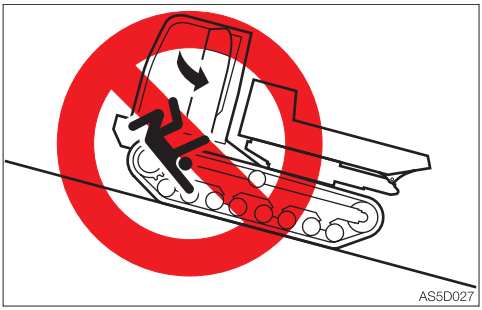

Opening the door while traveling on slopes is dangerous, as the force required to open and close the door changes abruptly. Always keep the door closed when traveling on slopes.

OPERATIONS POSSIBLE WITH THIS MACHINE

Backfilling

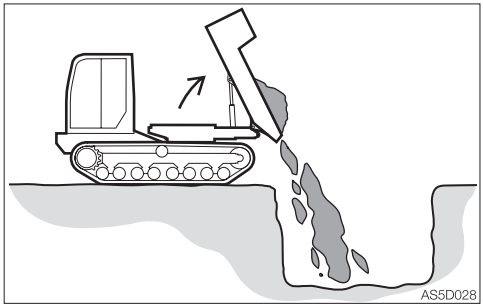

Slowly travel in reverse until the dump body reaches the near side of the hole edge, and then raise the dump body to dump the loaded material.

PARKING THE MACHINE

PARKING

⚠ WARNING

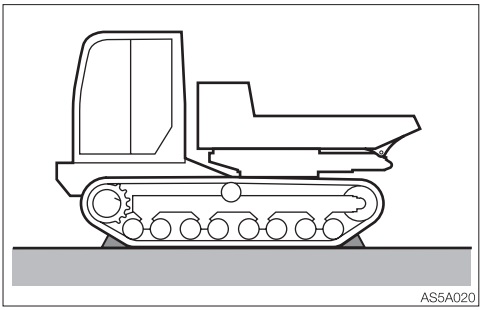

- **Park the machine on a flat, rigid and safe ground. Set the parking brake.**

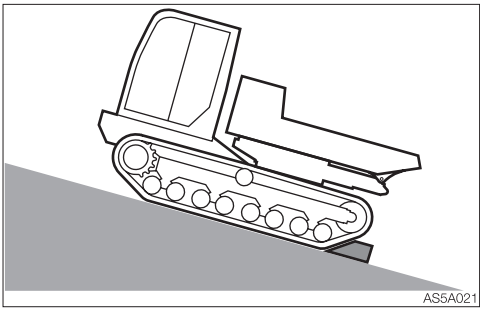

If you must park on a slope or incline, park the machine securely and block the movement of the machine.

- **When parking on a street, use barriers, caution signs, lights, etc., so that the machine can easily be seen even at night to avoid collision with other vehicles.**
- **Before leaving the operator's seat, raise the safety lock lever to engage the lock and stop the engine.**

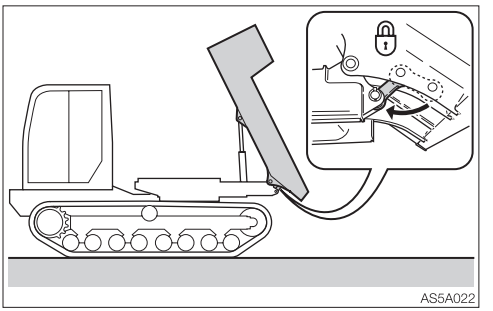

- **Do not leave the machine while the dump body is being raised. If it is absolutely necessary to leave the raised dump body unattended, be sure to engage the dump body prop to prevent the dump body from dropping.**

Before leaving the machine, do the followings:

1. Fully lower the dump body and make it parallel to the main frame.
2. Set the control levers to the neutral position.
3. Return the throttle controller to idle the engine at low speed.
4. Raise the safety lock lever to the lock position.
5. Stop the engine and remove the ignition key.
   Refer to "Stopping the engine" on page 3-5.

INSPECTION AND CHECKS AFTER STOPPING THE ENGINE

1. Check for oil or water leak and inspect the working equipment, covers and undercarriage. If any irregularities are found, repair.
2. Fill up the fuel tank.
   Refer to “Inspecting the fuel level” on page 5-20.
3. Remove any paper scraps or dirt from the engine room.
4. Remove any mud from the undercarriage.
5. Top off the DEF/AdBlue® tank.
   Refer to “Checking the DEF/AdBlue® level and refilling” on page 5-24.

Locking
Be sure to lock the following places:

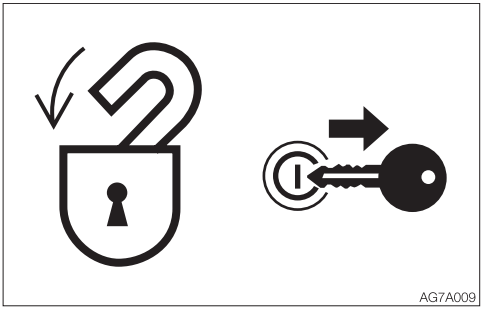

- Fuel filler cap
- Cab door
- Engine hood
- Side cover
- DEF/AdBlue® tank cover
- Battery cover

HANDLING IN COLD CLIMATES

PREPARING FOR COLD CLIMATES

Starting engine in cold climates is not easy, and it becomes more difficult if the coolant freezes. Prepare for cold-climate problems as follows.

Replacing the fuel and lubricant
Replace the hydraulic oil, engine oil and fuel with those intended for cold climates.
Refer to “Fuel and lubricant table” on page 5-4.

Engine coolant

⚠ WARNING

The engine coolant is combustible. Keep away from flame.
Use long-life coolant (antifreeze) and tap water for the engine coolant.

Note: New machines are delivered with JIS Type 2 long-life coolant (antifreeze) at a concentration of 50%.
Refer to “Fuel and lubricant table” on page 5-4.

Battery
As the temperature drops, the battery performance decreases.
Inspect the battery. If it is discharging, contact a Takeuchi service agent to have the battery recharged.
Refer to “Inspecting the battery fluid level and replenishing” on page 5-34.

CAUTIONS AFTER OPERATIONS

Observe the following cautions to prevent mud, water, or the undercarriage from freezing and making it impossible for the machine to move.

- Remove all mud and water from the machine body. In particular, wipe the hydraulic cylinder rod clean to prevent damage to the seal caused by mud or dirt on the rod surface getting inside the seal together with drops of water.
- Park the machine on hard and dry ground. If this is impossible, park the machine on a wooden board placed on ground.
- Drain any water in the fuel tank to prevent it from freezing.
  Refer to “Draining the water from the fuel tank” on page 5-38.
- As the battery capacity drops markedly in low temperatures, cover the battery or remove it from the machine and keep it in a warm place.
  If the electrolyte level is low, add distilled water in the morning before beginning work. To prevent the battery electrolyte from freezing in the night, do not add water after the day’s work.

AFTER THE COLD CLIMATE

When the climate becomes warmer, do as follows:

- Replace the fuel and oil for all parts with those specified in the “Fuel and lubricant table”.
  Refer to “Fuel and lubricant table” on page 5-4.
- If a coolant of “one season type” is used, drain the cooling system completely, clean out the inside of the cooling system thoroughly, and fill with tap water.
  Refer to “Cleaning the engine cooling system” on page 5-56.

HANDLING RUBBER TRACKS

Rubber tracks have an inherent weakness, lack of strength, due to their use of rubber. Be sure to observe the prohibitions and cautions below to prevent the tracks from being damaged or coming off.

PROHIBITIONS

Do not travel or operate the machine in the following places:

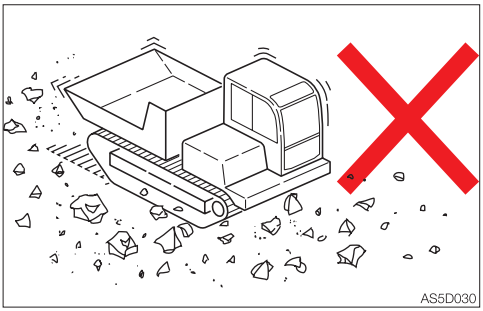

- Traveling and slewing on crushed rock, extremely rough hard rock, steel beams, scrap iron, or near the edges of steel plates will cause damage to the rubber tracks.

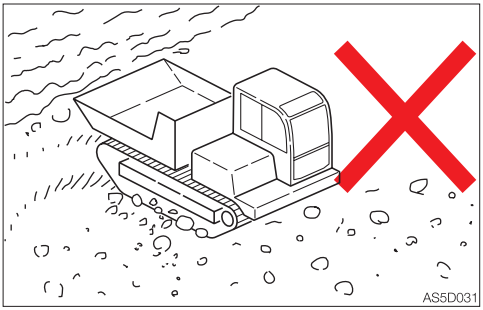

- Traveling on riverbeds or places where there are large numbers of boulders may cause the stones to get caught and damage the tracks or make the tracks come off.
- Do not use the machine on the seashore. The salt may corrode the steel core.

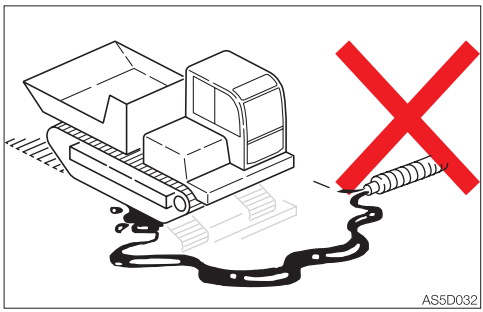

- Do not let fuel, oil, salt or chemical solvents get on the tracks. These substances may corrode the bonding of the steel cores on the tracks, resulting in rust or peeling. If any of these substances gets on the tracks, immediately clean it off with water.

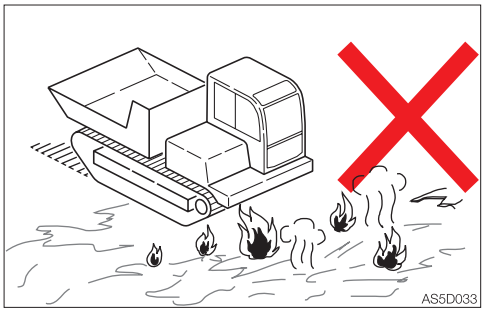

- It will cause an irregular wear or damage to the lugs, if the machine travels on irregular surfaces such as recently paved with asphalt, exposed to a bonfire or of hot iron sheets under the blazing sun.
- Do not move earth in places where the rubber tracks may slip. Doing so may speed up lug wear.

CAUTIONS

Observe the following cautions when operating the machine:

- Avoid changing course abruptly or spin-turning on concrete surfaces whenever possible. Doing so may wear or damage the rubber tracks.
- Avoid drops that may expose the rubber tracks to strong shocks.
- Salt, potassium chloride, ammonium sulfate, potassium sulfate, and triple superphosphate of lime can damage the tracks. If any of these substances gets on the tracks, wash if off thoroughly with water.
- Do not let the sides of the rubber tracks rub against concrete or walls.
- Be especially careful on snowy or frozen surfaces in winter, as the tracks tend to slip in such conditions.
- Use rubber tracks at temperatures between –25°C to +55°C (–14°F to 131°F).
- When storing the rubber tracks for long periods of time (three months or more), do so indoors in a place not exposed to direct sunlight or rain.

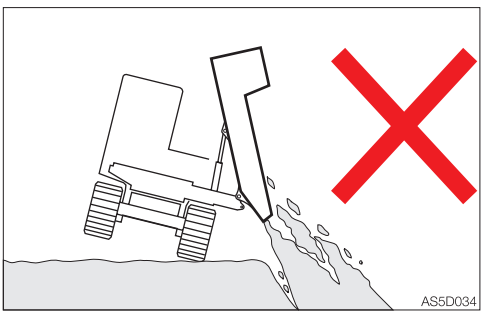

- Rubber tracks are not very stable because the entire lugs are made of rubber. Be very careful when swinging sideways.

PREVENTING THE RUBBER TRACKS FROM COMING OFF

Observe the following cautions to prevent the track from coming off:

- Always keep the tracks at the proper tension.

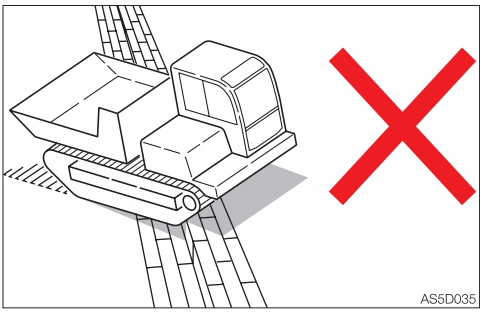

- When traveling over a large step such as a cobblestone or rock (20 cm (8 in.) or deeper), climb up the step at the right angle and do not change courses on top of the step.

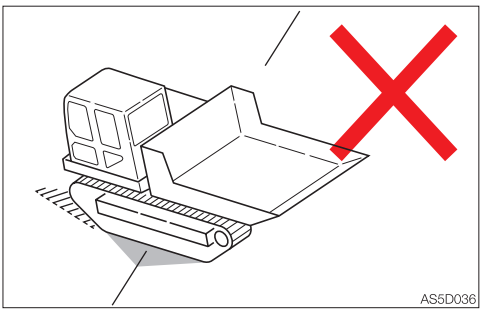

- When climbing in reverse, do not change directions at the point where the slope starts.